पेटेंट कार्यालय
शासकीय जर्नल

OFFICIAL JOURNAL
OF
THE PATENT OFFICE

निर्गमन सं. 10/2021	शुक्रवार	दिनांक: 05/03/2021
ISSUE NO. 10/2021	FRIDAY	DATE: 05/03/2021

पेटेंट कार्यालय का एक प्रकाशन
PUBLICATION OF THE PATENT OFFICE

INTRODUCTION

In view of the recent amendment made in the Patents Act, 1970 by the Patents (Amendment) Act, 2005 effective from 01st January 2005, the Official Journal of The Patent Office is required to be published under the Statute. This Journal is being published on weekly basis on every Friday covering the various proceedings on Patents as required according to the provision of Section 145 of the Patents Act 1970. All the enquiries on this Official Journal and other information as required by the public should be addressed to the Controller General of Patents, Designs & Trade Marks. Suggestions and comments are requested from all quarters so that the content can be enriched.

(Shri Rajendra Ratnoo)
CONTROLLER GENERAL OF PATENTS, DESIGNS & TRADE MARKS

5th MARCH, 2021

CONTENTS

THE PATENT OFFICE
KOLKATA, 05/03/2021
Address of the Patent Offices/Jurisdictions
The following are addresses of all the Patent Offices located at different places having their Territorial Jurisdiction on a Zonal basis as shown below:-

1	Office of the Controller General of Patents, Designs & Trade Marks, Boudhik Sampada Bhavan, Near Antop Hill Post Office,S.M.Road,Antop Hill, Mumbai – 400 037 Phone: (91)(22) 24123311, Fax : (91)(22) 24123322 E-mail: cgpdtm@nic.in	4	The Patent Office, Government of India, Intellectual Property Rights Building, G.S.T. Road, Guindy, Chennai – 600 032. Phone: (91)(44) 2250 2081-84 Fax : (91)(44) 2250 2066 E-mail: chennai-patent@nic.in ❖ The States of Andhra Pradesh, Telangana, Karnataka, Kerala, Tamil Nadu and the Union Territories of Puducherry and Lakshadweep.
2	The Patent Office, Government of India, Boudhik Sampada Bhavan, Near Antop Hill Post Office,S.M.Road,Antop Hill, Mumbai – 400 037 Phone: (91)(22) 24137701 Fax: (91)(22) 24130387 E-mail: mumbai-patent@nic.in ❖ The States of Gujarat, Maharashtra, Madhya Pradesh, Goa and Chhattisgarh and the Union Territories of Daman and Diu & Dadra and Nagar Haveli	5	The Patent Office (Head Office), Government of India, Boudhik Sampada Bhavan, CP-2, Sector –V, Salt Lake City, Kolkata- 700 091 Phone: (91)(33) 2367 1943/44/45/46/87 Fax: (91)(33) 2367 1988 E-Mail: kolkata-patent@nic.in ❖ Rest of India
3	The Patent Office, Government of India, Boudhik Sampada Bhavan, Plot No. 32., Sector-14, Dwarka, New Delhi – 110075 Phone: (91)(11) 25300200 & 28032253 Fax: (91)(11) 28034301 & 28034302 E.mail: delhi-patent@nic.in ❖ The States of Haryana, Himachal Pradesh, Jammu and Kashmir, Punjab, Rajasthan, Uttar Pradesh, Uttaranchal, Delhi and the Union Territory of Chandigarh.		

Website: www.ipindia.nic.in
www.patentoffice.nic.in

All applications, notices, statements or other documents or any fees required by the Patents Act, 1970 and The Patents (Amendment) Act, 2005 or by the Patents (Amendment) Rules, 2006 will be received only at the appropriate offices of the Patent Office.

Fees: The Fees may either be paid in cash or may be sent by Bank Draft or Cheques payable to the Controller of Patents drawn on a scheduled Bank at the place where the appropriate office is situated.

पेटेंट कार्यालय

कोलकाता, दिनांक 05/03/2021

• कार्यालयों के क्षेत्राधिकार के पते

विभिन्न जगहों पर स्थित पेटेंट कार्यालय के पते आंचलिक आधार पर दर्शित उनके प्रादेशिक अधिकार क्षेत्र के साथ नीचे दिए गए है:-

1	कार्यालय : महानियंत्रक, एकस्व, अभिकल्प तथा व्यापार चिहन, एंटोप हिल डाकघर के समीप, एस. एम. रोड, एंटोप हिल, मुम्बई- 400 037, भारत, फोन: (91) (22) 24123311 फ़ैक्स: (91) (22) 24123322 ई. मेल: cgpdtm@nic.in	4	पेटेंट कार्यालय, भारत सरकार इंटेलेक्चुअल प्रॉपर्टी राइट्स बिल्डिंग, इंडस्ट्रियल इस्टेट एसआईडीसीओ आरएमडी गोडाउन एरिया एडजसेन्ट टु ईगल फ्लास्क, जी. एस. टी. रोड, गायन्डी चेन्नई - 600 032. फोन: (91)(44) 2250 2081-84 फ़ैक्स: (91)(44) 2250-2066 ई. मेल: chennai-patent@nic.in ❖ आन्ध्र प्रदेश, तेलंगाना, कर्नाटक, केरल, तमिलनाडु तथा पुडुचेरी राज्य क्षेत्र एवं संघ शासित क्षेत्र, लक्षदीप
2	पेटेंट कार्यालय, भारत सरकार बौद्धिक संपदा भवन, एंटोप हिल डाकघर के समीप, एस. एम. रोड, एंटोप हिल, मुम्बई- 400 037, फोन: (91) (22) 24137701 फ़ैक्स: (91) (22) 24130387 ई. मेल: Mumbai-patent@nic.in ❖ गुजरात, महाराष्ट्र, मध्य प्रदेश, गोवा तथा छत्तीसगढ़ राज्य क्षेत्र एवं संघ शासित क्षेत्र, दमन तथा दीव, दादर और नगर हवेली.	5	पेटेंट कार्यालय, भारत सरकार कोलकाता, (प्रधान कार्यालय) बौद्धिक संपदा भवन, सीपी-2, सेक्टर- V, साल्ट लेक सिटी, कोलकाता-700 091, भारत. फोन: (91)(33) 2367 1943/44/45/46/87 फ़ैक्स:/Fax: (91)(33) 2367 1988 ई. मेल: kolkata-patent@nic.in ❖ भारत का अवशेष क्षेत्र
3	पेटेंट कार्यालय, भारत सरकार बौद्धिक संपदा भवन, प्लॉट सं. 32, सेक्टर- 14, द्वारका, नई दिल्ली- 110 075. फोन: (91)(11) 25300200, 28032253 फ़ैक्स: (91)(11) 28034301, 28034302 ई. मेल: delhi-patent@nic.in हरियाणा, हिमाचल प्रदेश, जम्मू तथा कश्मीर, पंजाब,राजस्थान, उत्तर प्रदेश, दिल्ली तथा उत्तरांचल राज्य क्षेत्रों, एवं संघ शासित क्षेत्र चंडीगढ़		

वेबसाइट: http://www.ipindia.nic.in
www.patentoffice.nic.in

पेटेंट अधिनियम, 1970 तथा पेटेंट (संशोधन) अधिनियम, 2005 अथवा पेटेंट (संशोधन) नियम, 2006 द्वारा वांछित सभी आवेदन, सूचनाए, विवरण या अन्य दस्तावेज़ या कोई शुल्क पेटेंट कार्यालय के केवल उपयुक्त कार्यालय में स्वीकृत होंगे।

शुल्क: शुल्क या तो नगद रूप में या Controller of Patents के नाम में देय बैंक ड्राफ्ट या चेक के द्वारा भेजी जा सकती है जो उसी स्थान के किसी अनुसूचित बैंक में प्रदत्त हो जहाँ उपयुक्त कार्यालय स्थित है ।

SPECIAL NOTICE

18 Months publication as required under Section 11A of the Patents Act, 1970 as amended by the Patents (Amendment) Act, 2005.

Notice is hereby given that any person at any time before the grant of Patent may give representation by way of opposition to the Controller of Patents at appropriate office on the ground and in a manner specified under section 25(1) of the Patents (Amendment) Act, 2005 read with Rule 55 of the Patents (Amendment) Rules, 2006.

Notice is also given that if any interested person requests for copies of the complete specification, drawing and abstract of any application already published, the photocopy of the same can be supplied by the Patent Office as per the jurisdiction on payment of prescribed fees of Rs.8/- per page. If any further details are required to be obtained, the same can be provided by the respective Patent Offices on request.

(Shri Rajendra Ratnoo)
CONTROLLER GENERAL OF PATENTS, DESIGNS & TRADE MARKS

SPECIAL NOTICE

Under the new provision of the Patents Act, 1970 as amended by the Patents (Amendment) Act, 2005 and Rules there under, Publication of the matter relating to Patents in the Official Gazette of India Part III, Section 2 has been discontinued and instead The Official Journal of the Patent Office is being published containing all the activities of The Patent Office such as publication of all the patent applications after 18th months , grant of patents & all other information in respect of the proceedings as required under the provisions of the Patents (Amendment) Act, 2005 and Rules thereunder on weekly basis on every **Friday**.

The Journal is uploaded in the website every Friday. So Paper form and CD-ROM form of the Journal are discontinued from 01/01/2009.

SPECIAL NOTICE

Every effort is being taken to publish all the patent applications under section 11(A) of the Patents Act. However, if duplication of publication of any application is found, then earlier date of publication will be taken for the purpose of provisional protection for applicant and Patent Office will grant Patent not before six months from the date of second publication, provided that there is there is no third party representation.

Early Publication:

The following patent applications have been published under section 11A (2) of The Patents (Amendment) Act 2005 and rule 24A of The Patents (Amendment) Rules, 2006. Any person may file representation by way of opposition to the Controller of Patents at the appropriate office against the grant of the patent in the prescribed manner under section 25(1) of the Patents (Amendment) Act 2005 read with the rule 55 of The Patents (Amendment) Rules, 2006:

(12) PATENT APPLICATION PUBLICATION

(21) Application No.202011011052 A

(19) INDIA

(22) Date of filing of Application :14/03/2020

(43) Publication Date : 05/03/2021

(54) Title of the invention : AN ERGONOMIC WALKING STICK WITH SIT TO STAND ASSISTANCE

(51) International classification	:A61G0005140000, A61H0003040000, A61G0007100000, A61G0007053000, A45B0009000000
(31) Priority Document No	:NA
(32) Priority Date	:NA
(33) Name of priority country	:NA
(86) International Application No	:NA
Filing Date	:NA
(87) International Publication No	: NA
(61) Patent of Addition to Application Number	:NA
Filing Date	:NA
(62) Divisional to Application Number	:NA
Filing Date	:NA

(71)**Name of Applicant :**

1)Charu

Address of Applicant :Charu c/o Mr. Mahendra Kumar Maurya 3, Bihari park, Saraswatipuram, near judge€™s lane Next to SGPGI, Rai Bareilly road Lucknow-226014 Uttar Pradesh India

(72)**Name of Inventor :**

1)Charu

2)Amrendra Kumar Das

(57) Abstract :

An ergonomic walking stick with sit-to-stand assistance (100) supports the users in mobility, in standing up from sitting position and vice versa. The device comprises a load-bearing shaft (110) or shafts (110,130) that can be adjusted to a particular height. The upper part of the shaft in the form of a handle (111) can support the user in walking or standing. A curved component (120) attached to the main shaft (110) assists in sit-to-stand transfer from various sitting positions such as chair sitting, floor sitting and squatting. The device€™s base consists of multiple legs of predetermined length connected to each other at predetermined angle such that the walking stick remains balanced when the load is applied on the handle while using it for mobility and sit-to-stand transfer. The bird-like shape of the stick makes it a beautiful home dcor accessory.

No. of Pages : 18 No. of Claims : 10

(12) PATENT APPLICATION PUBLICATION
(21) Application No.202011014493 A
(19) INDIA
(22) Date of filing of Application :01/04/2020
(43) Publication Date : 05/03/2021

(54) Title of the invention : URBAN RAIN WATER HARVESTING AND ITS MONITORING

(51) International classification	:A01G0025160000, E03B0001040000, E03B0003030000, E03B0007020000, G06F0001300000	(71)**Name of Applicant :** **1)MOHAN LAL AGGARWAL** Address of Applicant :J C BOSE UNIVERSITY OF SCIENCE AND TECHNOLOGY FARIDABAD-121006 Haryana India **2)RAVI VERMA**
(31) Priority Document No	:NA	
(32) Priority Date	:NA	(72)**Name of Inventor :**
(33) Name of priority country	:NA	**1)MOHAN LAL AGGARWAL**
(86) International Application No	:NA	**2)RAVI VERMA**
Filing Date	:NA	
(87) International Publication No	: NA	
(61) Patent of Addition to Application Number	:NA	
Filing Date	:NA	
(62) Divisional to Application Number	:NA	
Filing Date	:NA	

(57) Abstract :
An urban hybrid rain water harvesting system and associated smart monitoring method An urban hybrid rain water harvesting system and an associated smart monitoring method comprises a rain water drainage pipe(1) which connect roof top to ground tank(2); a water tank cover(4); a suction pipe(5); a pump foundation (6)to hold treadle pump(7); a delivery pipe(8) to deliver water from treadle pump to measurement sensor(9); a rotary type flow measurement sensor(9) to measure the flow of water which is supply to plants; sensor power (11) and signal wire connects measurement sensor to Wi-Fi development module with micro-controller; power adapter or controller(13); a smart phone(14) and said method comprising steps for urban population for irrigation in dry season and monitoring water supply from a distance for urban population. The invention refers to water conservation. The user can monitor the supply of water from a remote location using the mobile application.

No. of Pages : 22 No. of Claims : 9

(12) PATENT APPLICATION PUBLICATION
(19) INDIA
(22) Date of filing of Application :11/06/2020
(21) Application No.202011024500 A
(43) Publication Date : 05/03/2021

(54) Title of the invention : A SELF-SANITIZING APPAREL

(51) International classification	:A61L0002100000, A61K0008340000, H04L0027260000, B01J0020340000, G11C0013000000	(71)**Name of Applicant :** **1)SINGH, Mitali** Address of Applicant :9B, Heritage Devine Apartment, Gyan Khand Part-II, Indirapuram,Ghaziabad-201014, INDIA Uttar Pradesh India
(31) Priority Document No	:NA	(72)**Name of Inventor :**
(32) Priority Date	:NA	**1)SINGH, Mitali**
(33) Name of priority country	:NA	
(86) International Application No	:NA	
Filing Date	:NA	
(87) International Publication No	: NA	
(61) Patent of Addition to Application Number	:NA	
Filing Date	:NA	
(62) Divisional to Application Number	:NA	
Filing Date	:NA	

(57) Abstract :
The present invention relates to an apparel. More specifically the present invention relates to a self-sanitizing apparel, which inactivates/kills microbes, specifically COVID-19 virus thus can be re-used or used multiple times without washing or sanitization.

No. of Pages : 12 No. of Claims : 10

(12) PATENT APPLICATION PUBLICATION
(21) Application No.202011030764 A
(19) INDIA
(22) Date of filing of Application :19/07/2020
(43) Publication Date : 05/03/2021

(54) Title of the invention : MODULAR PROSTHETIC ARM ADJUNCT WITH PROSTHETIC HAND AND ROTARY ACTUATORS CONTROL SYSTEM

(51) International classification	:A61F0002580000, A61F0002500000, A61F0002680000, A61F0002700000, A61F0002720000
(31) Priority Document No	:NA
(32) Priority Date	:NA
(33) Name of priority country	:NA
(86) International Application No	:NA
Filing Date	:NA
(87) International Publication No	: NA
(61) Patent of Addition to Application Number	:NA
Filing Date	:NA
(62) Divisional to Application Number	:NA
Filing Date	:NA

(71)**Name of Applicant :**
1)University of Petroleum and Energy Studies
Address of Applicant :Energy Acres, Bidholi, Premnagar, Dehradun, Uttarakhand, India-248007 Uttarakhand India
(72)**Name of Inventor :**
1)RAMAN BALA
2)JASJIT SINGH
3)NAMYA KAMBOJ
4)NAMITA KAMBOJ
5)VARNITA VERMA
6)NILANJAN BHARADWAJ

(57) Abstract :
The present invention relates to a system and method for implanting a modular prosthetic arm 102 that facilitates interchangeability between prosthetic hand 104, and actuator control system 106 to enhance the scope of utility of prosthetic arm 102 for amputees. Further, the system and method provide a GUI 402 that allows an amputee to control actuators control system 106 parameters and monitor the prosthetics' hands sensors and actuator's performance along with gripping force, holding force exerted by the hand on the object, and enhance the user interface by implanting GUI 402 on prosthetic arm 102.

No. of Pages : 36 No. of Claims : 8

(12) PATENT APPLICATION PUBLICATION
(19) INDIA
(22) Date of filing of Application :24/07/2020
(21) Application No.202011031844 A
(43) Publication Date : 05/03/2021

(54) Title of the invention : SYSTEM AND METHOD FOR ANALYZING EMOTION-BIOFIELD IN REAL-TIME

(51) International classification	:A61B0005000000, H04L0029060000, H04L0029080000, G06F0009500000, G06F0003010000
(31) Priority Document No	:NA
(32) Priority Date	:NA
(33) Name of priority country	:NA
(86) International Application No	:NA
Filing Date	:NA
(87) International Publication No	: NA
(61) Patent of Addition to Application Number	:NA
Filing Date	:NA
(62) Divisional to Application Number	:NA
Filing Date	:NA

(71)**Name of Applicant :**
1)University of Petroleum and Energy Studies
Address of Applicant :Energy Acres, Bidholi, Premnagar, Dehradun, Uttarakhand, India-248007 Uttarakhand India
(72)**Name of Inventor :**
1)Ms. Ninni Singh
2)Mr. Gunjan Chhabra
3)Dr. Neelu Jyoti Ahuja
4)Dr. Ajay Prasad
5)Dr. Venkatadri M.

(57) Abstract :
A system for analyzing emotion-biofield in real-time is disclosed. A recording module (102) configured to capture a low-resolution digital image (106) of a user (108). An ACV module (110) is configured to convert said digital image (106) of said user into a biofield visualization (114) in order to generate an energy field in a color pattern format. A plurality of wearable sensors (116 is configured to compute said converted biofield visualization (114) of said digital image (106). A cloud storage (122) is configured to receive said computed biofield visualization (114) and a derived emotion data of said user (108). A display module (124) is provided with a computing device (128) in order to display said processed biofield data which is indicative of said emotion and biofield status of said user (108). A user interface (130) is configured to select and play a plurality of media files according to an input received from said user.

No. of Pages : 28 No. of Claims : 10

(12) PATENT APPLICATION PUBLICATION
(21) Application No.202011032872 A
(19) INDIA
(22) Date of filing of Application :31/07/2020
(43) Publication Date : 05/03/2021

(54) Title of the invention : SYSTEM AND METHOD FOR PROVIDING CUSTOMIZED OFFERS VIA A SMART DIGITAL WALLET

(51) International classification	:G06Q0020360000, G06Q0020100000, H04N0021840000, H02J0003140000, H04M0003220000	(71)**Name of Applicant :** **1)HIMANSHU RATRA** Address of Applicant :H NO 1317 SECTOR 18 OLD FARIDABAD Haryana India (72)**Name of Inventor :** **1)HIMANSHU RATRA**
(31) Priority Document No	:NA	
(32) Priority Date	:NA	
(33) Name of priority country	:NA	
(86) International Application No	:NA	
Filing Date	:NA	
(87) International Publication No	: NA	
(61) Patent of Addition to Application Number	:NA	
Filing Date	:NA	
(62) Divisional to Application Number	:NA	
Filing Date	:NA	

(57) Abstract :
A smart digital wallet is disclosed to provide an offer amount to a user for a special occasion. The smart digital wallet provides an interface to the user to enter the necessary details such as amount, date & time of the special occasion or the like. The smart digital wallet runs an algorithm to calculate the offer amount for the special occasion and displays the calculated amount. Further, the smart digital wallet provides an option for the user to deposit the calculated amount into the smart digital wallet. If yes, the smart digital wallet blocks the amount for a predefined time period. Otherwise, the smart digital wallet repeats the same process.

No. of Pages : 14 No. of Claims : 5

(12) PATENT APPLICATION PUBLICATION
(21) Application No.202011035788 A
(19) INDIA
(22) Date of filing of Application :19/08/2020
(43) Publication Date : 05/03/2021

(54) Title of the invention : A HIGH-PERFORMANCE COMPOSITE ELECTRODE FOR LI-ION BATTERY

(51) International classification	:H01M0004580000, H01M0004620000, H01L0051000000, H01M0010052500, H01M0004040000	(71)**Name of Applicant :** **1)INDIAN INSTITUTE OF TECHNOLOGY, ROORKEE** Address of Applicant :Roorkee Uttarakhand India (72)**Name of Inventor :** **1)MR. HARI RAJ** **2)DR. ANJAN SIL**
(31) Priority Document No	:NA	
(32) Priority Date	:NA	
(33) Name of priority country	:NA	
(86) International Application No	:NA	
Filing Date	:NA	
(87) International Publication No	: NA	
(61) Patent of Addition to Application Number	:NA	
Filing Date	:NA	
(62) Divisional to Application Number	:NA	
Filing Date	:NA	

(57) Abstract :
Present invention relates to a high-performance composite electrode (cathode) consisting of LiFePO4 as an active material, multi-walled carbon nanotubes (MWCNTs) as a conductive additive and poly (3,4-ethylene dioxythiophene): poly (styrene sulfonate) (PEDOT:PSS) as a binder. In the present invention, LiFePO4 prepared by sol-gel process, carboxyl group functionalized MWCNTs (> 90%) and PEDOT: PSS (3 wt.% dispersion in water) are used. The synergistic effect of PEDOT: PSS and MWCNTs on LiFePO4 cathode of lithium ion battery is a benefit to overcome the drawback of using PVDF binder and low conductive carbon additive.

No. of Pages : 25 No. of Claims : 8

(12) PATENT APPLICATION PUBLICATION
(21) Application No.202011036754 A
(19) INDIA
(22) Date of filing of Application :26/08/2020
(43) Publication Date : 05/03/2021

(54) Title of the invention : A ROLLER BED SYSTEM FOR SMOOTH LOADING/UNLOADING OF SKID FROM AUTOMATED GUIDED VEHICLE

(51) International classification	:G05D0001020000, G01N0033500000, G05B0019418000, B65G0013110000, C21D0009000000	(71)**Name of Applicant :** **1)TAIKISHA ENGINEERING INDIA PRIVATE LIMITED** Address of Applicant :Plot No. 26, Udyog Vihar, Ph. IV, Gurgaon 122015, Haryana, India Haryana India
(31) Priority Document No	:NA	(72)**Name of Inventor :**
(32) Priority Date	:NA	**1)LYUL, Kim Moung**
(33) Name of priority country	:NA	**2)VHARE, Sachin**
(86) International Application No	:NA	
Filing Date	:NA	
(87) International Publication No	: NA	
(61) Patent of Addition to Application Number	:NA	
Filing Date	:NA	
(62) Divisional to Application Number	:NA	
Filing Date	:NA	

(57) Abstract :
The present invention relates to a roller bed system for smooth loading/unloading of skid (8) or components from automated guided vehicle (AGV) in the factories/warehouses for various tasks. Specifically, the roller bed system consist of an equidistant roller assembly mounting frame (1) having series of rollers (2) connected to each other by timing pulley belt (3) and a single driving motor (4) allows AGV movement between the rollers (2) in conveyor direction of AGV for smooth loading/unloading of skid (8) and therefore enables the AGV to transfer skid (8) without any separate transferring equipment.

No. of Pages : 10 No. of Claims : 5

(12) PATENT APPLICATION PUBLICATION
(19) INDIA
(22) Date of filing of Application :26/08/2020
(21) Application No.202011036770 A
(43) Publication Date : 05/03/2021

(54) Title of the invention : A LIFTING ASSEMBLY IN AN AUTOMATED GUIDED VEHICLE

(51) International classification	:B66F0009060000, B66F0003160000, B66F0009075000, B66F0003080000, B66F0003180000
(31) Priority Document No	:NA
(32) Priority Date	:NA
(33) Name of priority country	:NA
(86) International Application No	:NA
Filing Date	:NA
(87) International Publication No	: NA
(61) Patent of Addition to Application Number	:NA
Filing Date	:NA
(62) Divisional to Application Number	:NA
Filing Date	:NA

(71)**Name of Applicant :**
1)TAIKISHA ENGINEERING INDIA PRIVATE LIMITED
Address of Applicant :Plot No. 26, Udyog Vihar, Ph. IV, Gurgaon 122015, Haryana, India Haryana India
(72)**Name of Inventor :**
1)LYUL, Kim Moung
2)VHARE, Sachin
3)HOL, Suraj

(57) Abstract :
The present invention relates to an automated guided vehicle system with screw jack lifting mechanism to achieve vertical lifting of components. The automated guided vehicle system (AGV) (1) includes a base frame/chassis (2), a lifting assembly (4), a top frame (8), load supporting arrangement mounted on the top frame (8) configured to hold the component and a driving means. The lifting device screw jack assembly utilizes four point lifting arrangement (5) to make a balanced and sturdy lifting. Each screw jack further comprises of gear housing (12) and lead screw (13). A driving mechanism comprising a driving motor (7) and a driving shaft (6), whereby the driving motor (7) is configured to transmit a lifting force to all the screw jack assembly (2) through a drive shaft (6) for lifting the component up down in a synchronized manner. The lifting device facilitates self-locking of gears to make the lifting balanced and sturdy. The disclosed system has higher load bearing capacity, improved stroke/lifting height and increased up down speed, thereby reducing takt time resulting higher productivity.

No. of Pages : 15 No. of Claims : 8

(12) PATENT APPLICATION PUBLICATION
(21) Application No.202011040834 A
(19) INDIA
(22) Date of filing of Application :21/09/2020
(43) Publication Date : 05/03/2021

(54) Title of the invention : AUTOMATED CURING SYSTEM

(51) International classification	:A61M0005172000, A61M0005142000, G01N0035100000, A61M0011040000, G01N0021640000
(31) Priority Document No	:NA
(32) Priority Date	:NA
(33) Name of priority country	:NA
(86) International Application No	:NA
Filing Date	:NA
(87) International Publication No	: NA
(61) Patent of Addition to Application Number	:NA
Filing Date	:NA
(62) Divisional to Application Number	:NA
Filing Date	:NA

(71)**Name of Applicant :**
1)SHARDA UNIVERSITY
Address of Applicant :32-34, Knowledge Park 3, Greater Noida, 201306, Uttar Pradesh (UP), India Uttar Pradesh India
2)GOEL INNOVATIVES
(72)**Name of Inventor :**
1)Alok Goel
2)Vivek Mathur

(57) Abstract :
The present invention provides an automated curing system (1000) comprising a storage tank (100), a delivery mechanism (200), a pumping mechanism (300), a curing mechanism (400) and a control mechanism (500). The control mechanism (500) is configured to control the operations of the delivery mechanism (200), the pumping mechanism (300) and the curing mechanism (400) using a microcontroller.

No. of Pages : 15 No. of Claims : 7

(12) PATENT APPLICATION PUBLICATION
(21) Application No.202011041084 A
(19) INDIA
(22) Date of filing of Application :22/09/2020
(43) Publication Date : 05/03/2021

(54) Title of the invention : A METHOD AND SYSTEM FOR AUTOMATED PAINTING OF VEHICLES USING AUTOMATED GUIDED VEHICLE

(51) International classification	:G05D0001020000, G06Q0010060000, G07C0005000000, B62D0065180000, G06Q0010040000	(71)**Name of Applicant :** **1)TAIKISHA ENGINEERING INDIA PRIVATE LIMITED** Address of Applicant :Plot No. 26, Udyog Vihar, Ph. IV, Gurgaon 122015, Haryana, India, 122015 Haryana India
(31) Priority Document No	:NA	(72)**Name of Inventor :**
(32) Priority Date	:NA	**1)LYUL, Kim Moung**
(33) Name of priority country	:NA	**2)VHARE, Sachin**
(86) International Application No	:NA	
Filing Date	:NA	
(87) International Publication No	: NA	
(61) Patent of Addition to Application Number	:NA	
Filing Date	:NA	
(62) Divisional to Application Number	:NA	
Filing Date	:NA	

(57) Abstract :
A system and method for providing the automated painting of vehicles to increase the flexibility and productivity of the automobile industry is discussed herein. To avoid collision between the transporting bodies and further to reduce the downtimes caused by sudden malfunctions a need arises for a system that is cost effective and easy to handle. The present invention relates to an automated guided vehicle system (AGV) for autonomously lifting or loading/unloading of a load/component/vehicle-body and transporting of components or load carried by the AGV to the floor conveyor seamlessly without any transfer equipment. The present invention utilizes smart management system (FLEET) to determine AGV€™s current and target location, updating Body in white (BIW) status, further it also accesses BIW process, color code of the BIW with system that helps in remarkable improvement in production planning.

No. of Pages : 25 No. of Claims : 10

(12) PATENT APPLICATION PUBLICATION
(21) Application No.202011047124 A
(19) INDIA
(22) Date of filing of Application :28/10/2020
(43) Publication Date : 05/03/2021

(54) Title of the invention : A MOBILE CART FOR STORAGE AND RETREIVAL OF PAYLOADS WITHIN A WAREHOUSE

(51) International classification	:B65G0001040000, B62B0003000000, B62B0005000000, B62B0003020000, B62B0003100000	(71)**Name of Applicant :** **1)Pradeep Jain** Address of Applicant :57 Nimri Colony Double Storey Flats Delhi Delhi India **2)Naman Jain** **3)Manuj Bansal** **4)Tuhinanshu** **5)Dheeraj Verma**
(31) Priority Document No	:NA	
(32) Priority Date	:NA	
(33) Name of priority country	:NA	
(86) International Application No	:NA	(72)**Name of Inventor :**
Filing Date	:NA	**1)Pradeep Jain**
(87) International Publication No	: NA	**2)Naman Jain**
(61) Patent of Addition to Application Number	:NA	**3)Manuj Bansal**
Filing Date	:NA	**4)Tuhinanshu**
(62) Divisional to Application Number	:NA	**5)Dheeraj Verma**
Filing Date	:NA	

(57) Abstract :
The present invention relates to a material handling system using mobile cart which provides efficient storage and retrieval of payloads in a three dimensional warehousing system and on multiple levels. In one embodiment, the mobile cart including a first frame comprising of eight wheels, the primary four wheels of the first frame are configured to move mobile cart in the˜X€™ direction motion, and the secondary wheels of the first frame which are pinion inbuilt wheels configured to move mobile cart in the˜Z€™ direction motion. Further, the mobile cart includes a second frame which is moveably attached to the first frame, the second frame including a gear motor, drive pulley, drive belt, four lead screw units, a plurality of sensors and tertiary four wheels, the tertiary four wheels are configured to move mobile cart in the˜Y€™ direction motion.

No. of Pages : 25 No. of Claims : 8

(12) PATENT APPLICATION PUBLICATION
(21) Application No.202011047687 A
(19) INDIA
(22) Date of filing of Application :02/11/2020
(43) Publication Date : 05/03/2021

(54) Title of the invention : ELECTRO-MEMBRANE PROCESSES TO RECOVER CAUSTIC FROM GREEN LIQUOR OF AGRO-BASED PAPER MILLS

(51) International classification	:D21C0011000000, B01D0061440000, C25B0001000000, C02F0001440000, C02F0103020000
(31) Priority Document No	:NA
(32) Priority Date	:NA
(33) Name of priority country	:NA
(86) International Application No	:NA
Filing Date	:NA
(87) International Publication No	: NA
(61) Patent of Addition to Application Number	:NA
Filing Date	:NA
(62) Divisional to Application Number	:NA
Filing Date	:NA

(71)**Name of Applicant :**
1)INDIAN INSTITUTE OF TECHNOLOGY ROORKEE
Address of Applicant :Roorkee Uttarakhand India
(72)**Name of Inventor :**
1)PROF. SUJAY CHATTOPADHYAY
2)MR. PRIYABRATA MANDAL
3)MR. BHUVANESH E
4)MS. PRIYA GOEL

(57) Abstract :
Present invention relates toa novel, environmentally friendly electromembrane process, specifically, membrane electrolysis (electroelectrolysis, EED) but not limited to electrodialysis (ED) and bipolar membrane electrodialysis (BMED) membrane based electrolysis process for the recovery of NaOH as from green liquor of pulp mills. In order to validate the principal objective of the present invention, the effect of process parameters (applied current density; feed concentration; and feed flow velocity) and cell design specifications (flow promoter; membrane-electrode spacing and cell orientations) were investigated the ta with the tailor made EED set up. The obtained results indicate the direct dependency of applied current densities and feed concentration on Na+1 ions transport, in turn NaOH recovery. Meanwhile, the optimal maintenance of flow rate, inter-membrane distance, along with the presence of netted spacer and specific orientation influence the NaOH recovery. In addition to the 1ststage operation, a maximum recovery was achieved with the 2nd stage operation as proposed by scheme I and II. Hydrogen generation along with NaOH recovery through the proposed technique promotes zero liquid discharge technology; and makes it technically and economically feasible to operate specifically in pulp mills of smaller capacity.

No. of Pages : 29 No. of Claims : 6

(12) PATENT APPLICATION PUBLICATION
(21) Application No.202011048384 A
(19) INDIA
(22) Date of filing of Application :05/11/2020
(43) Publication Date : 05/03/2021

(54) Title of the invention : COST-EFFECTIVE ISOLATED OPERATION OF THE DFIG WIND SYSTEM SUPPORTED BY THE DC MICROGRID

(51) International classification	:H02J0003380000, F03D0009250000, F03D0007020000, H02P0003220000, F03D0013200000	(71)**Name of Applicant :** **1)INDIAN INSTITUTE OF TECHNOLOGY, ROORKEE** Address of Applicant :Roorkee, uttrakhand, india, 247667 Uttarakhand India
(31) Priority Document No	:NA	(72)**Name of Inventor :** **1)DR. GURURAJ MIRLE VISHWANATH**
(32) Priority Date	:NA	**2)DR. NARAYANA PRASAD PADHY**
(33) Name of priority country	:NA	**3)MR. BANDLA KRISHNA**
(86) International Application No	:NA	**4)MRS. RASHMI PRASAD**
Filing Date	:NA	
(87) International Publication No	: NA	
(61) Patent of Addition to Application Number	:NA	
Filing Date	:NA	
(62) Divisional to Application Number	:NA	
Filing Date	:NA	

(57) Abstract :
Present invention relates to an isolated topology of the DFIG wind system, which is economical than the existing topologies. In the present invention, the battery present within the DC microgrid (DCMG) maintains the DC link voltage and hence an extra converter to maintain the DC link of the DFIG is eliminated. In addition, the additional bidirectional converter/diode bride rectifier which is otherwise needed to interface the DC Microgrid with the DFIG wind system is avoided. Overall, the DFIG wind system supported by DCMG offers a reliable, better power quality, efficient and economical solution thereby best suiting the isolated application.

No. of Pages : 28 No. of Claims : 3

(12) PATENT APPLICATION PUBLICATION
(21) Application No.202011049934 A
(19) INDIA
(22) Date of filing of Application :17/11/2020
(43) Publication Date : 05/03/2021

(54) Title of the invention : FABRICATION OF BIO-DEGRADABLE TRIPLE LAYERED NANO-FIBROUS BANDAGES AND APPLICATIONS THEREOF

(51) International classification	:A61L0027380000, A61L0027540000, A61L0015400000, A61L0027560000, A61L0015420000
(31) Priority Document No	:NA
(32) Priority Date	:NA
(33) Name of priority country	:NA
(86) International Application No	:NA
Filing Date	:NA
(87) International Publication No	: NA
(61) Patent of Addition to Application Number	:NA
Filing Date	:NA
(62) Divisional to Application Number	:NA
Filing Date	:NA

(71)**Name of Applicant :**
1)INDIAN INSTITUTE OF TECHNOLOGY, ROORKEE
Address of Applicant :Roorkee, Uttrakhand, India, 247667 Uttarakhand India
(72)**Name of Inventor :**
1)DR. GOPINATH PACKIRISAMY
2)MR. VINAY KUMAR

(57) Abstract :
The present invention relates to a biocompatible and biodegradable triple-layered biomaterial-based nanofibrous scaffold or bandages comprising a top layer made up of silk fibroin, a middle antibiotic layer made up of silk sericin; and a porous bottom layer made up of silk fibroin for wound healing applications. It also relates to the process of fabrication of a triple-layered biomaterial-based nanofibrous scaffold. The additional advantage of using silk is its inherent antimicrobial prop-erty. Thus this nanofibrous scaffold /bandage can be used with/without any thera-peutic agents. The number of layers can be increased or decreased depending on the nature of the wound as personalized medicine. Also, a combination of thera-peutic agents can be loaded to synergize the therapeutic effect or to overcome the resistance by microbes. The nanofibrous scaffold of the present invention exhibits the antibacterial, scar free, self-adhesive and blood clotting properties. Hence, this biomaterial-based nanofibrous scaffold or bandages can be utilized in a wide vari-ety of applications, not limited to skin regeneration, acute and chronic wound healing applications.

No. of Pages : 31 No. of Claims : 10

(12) PATENT APPLICATION PUBLICATION
(21) Application No.202011051143 A
(19) INDIA
(22) Date of filing of Application :24/11/2020
(43) Publication Date : 05/03/2021

(54) Title of the invention : DEVELOPMENT OF EPOXY COMPOSITES REINFORCED BY WASTE KANS GRASS (SACCHARUM SPONTANEUM) FILLER BY HAND-LAYUP METHOD

(51) International classification	:B29K0063000000, C08J0005040000, C08J0009000000, H01L0023290000, B29C0045140000	(71)**Name of Applicant :** **1)INDIAN INSTITUTE OF TECHNOLOGY ROORKEE** Address of Applicant :ROORKEE, UTTARAKHAN, INDIA-247667 Uttarakhand India
(31) Priority Document No	:NA	(72)**Name of Inventor :**
(32) Priority Date	:NA	**1)PROF. (DR.) SHISHIR SINHA**
(33) Name of priority country	:NA	**2)DR. GIRDHARI LAL DEVNANI**
(86) International Application No	:NA	
Filing Date	:NA	
(87) International Publication No	: NA	
(61) Patent of Addition to Application Number	:NA	
Filing Date	:NA	
(62) Divisional to Application Number	:NA	
Filing Date	:NA	

(57) Abstract :
Present invention relates to a process for development of epoxy composites reinforced by waste Kans grass (Saccharum Spontaneum) filler by hand-layup method. The process consists of (a) mixing of dried filler and epoxy with the help of mixer at 1000-1500 rpm for 5 to 10 minutes; (b) Pouring of uniform mixture to give the shape of sheet in a mold of size (300 mm x300 mm x10 mm) having anti-adhesive coating; (c) Rolling of sheet with roller to remove bubble and voids; and finally (d) Putting a dead weight of 20-25 Kg for 24 hours to obtain the epoxy composite. Figure 1

No. of Pages : 27 No. of Claims : 4

(12) PATENT APPLICATION PUBLICATION
(21) Application No.202011051144 A
(19) INDIA
(22) Date of filing of Application :24/11/2020
(43) Publication Date : 05/03/2021

(54) Title of the invention : MAGNETIC BIOCHAR MANUFACTURED FROM INDUSTRIAL EFFLUENT TREATMENT PLANT (ETP) SLUDGE FOR THE REMOVAL OF POLLUTANTS

(51) International classification	:C02F0001280000, H01J0049100000, B01J0020200000, B32B0027300000, B01J0020180000	(71)**Name of Applicant :** **1)INDIAN INSTITUTE OF TECHNOLOGY ROORKEE** Address of Applicant :ROORKEE, UTTARAKHAN, INDIA-247667 Uttarakhand India
(31) Priority Document No	:NA	(72)**Name of Inventor :** **1)DR. VIMAL CHANDRA SRIVASTAVA**
(32) Priority Date	:NA	**2)MR. VIKASH SINGH**
(33) Name of priority country	:NA	
(86) International Application No	:NA	
Filing Date	:NA	
(87) International Publication No	: NA	
(61) Patent of Addition to Application Number	:NA	
Filing Date	:NA	
(62) Divisional to Application Number	:NA	
Filing Date	:NA	

(57) Abstract :
The present invention relates to the production of magnetic biochar and a method for conversion of industrial ETP sludge into sustainable, low-cost, efficient, magnetic biochar for the removal of toxic and emerging pollutants such as ofloxacin, phenols, nitrogenous compounds from aqueous solution. The presence of iron oxide in the prepared biochar is confirmed by the techniques like VSM, XRD, and TEM. After the adsorption study, biochar is thermally regenerated and examined for the regeneration study. Leaching of iron is also verified for every cycle by inductively coupled plasma mass spectrometer (ICPMS) and found within the permissible limits.

No. of Pages : 29 No. of Claims : 7

(12) PATENT APPLICATION PUBLICATION
(21) Application No.202011051146 A
(19) INDIA
(22) Date of filing of Application :24/11/2020
(43) Publication Date : 05/03/2021

(54) Title of the invention : A POT PROCESS FOR SYNTHESIS OF NANOMETAL CARBON HYBRIDS AND BIO-OILS FROM METAL CONTAMINATED WASTE WATER AND BIOMASS

(51) International classification	:C22B0007000000, B01J0020060000, C02F0101200000, C02F0101100000, B22F0001000000
(31) Priority Document No	:NA
(32) Priority Date	:NA
(33) Name of priority country	:NA
(86) International Application No	:NA
Filing Date	:NA
(87) International Publication No	: NA
(61) Patent of Addition to Application Number	:NA
Filing Date	:NA
(62) Divisional to Application Number	:NA
Filing Date	:NA

(71)**Name of Applicant :**
1)INDIAN INSTITUTE OF TECHNOLOGY ROORKEE
Address of Applicant :ROORKEE Uttarakhand India
(72)**Name of Inventor :**
1)PROF. NARAPUREDDY SIVA MOHAN REDDY
2)MS. PRIYANKA YADAV

(57) Abstract :
The present invention relates to a one step process for recovery of metals, production of bio-oil and generation of nanometal carbon hybrids. A single step method to remove the metals from waste streams was proposed along with the synthesis of bio-oil and nanometal carbon hybrids. The nanometal carbon hybrids are < 50 nm and can be implemented as energy materials and filter media for air and water during hydrothermal liquefaction.

No. of Pages : 18 No. of Claims : 6

(12) PATENT APPLICATION PUBLICATION
(21) Application No.202011055865 A
(19) INDIA
(22) Date of filing of Application :22/12/2020
(43) Publication Date : 05/03/2021

(54) Title of the invention : SOFT ACTUATOR FOR ROBOTIC MANIPULATION AND LOCOMOTION

(51) International classification	:A61M0025090000, B25J0015120000, B25J0009140000, F15B0015100000, H02N0001000000
(31) Priority Document No	:NA
(32) Priority Date	:NA
(33) Name of priority country	:NA
(86) International Application No	:NA
Filing Date	:NA
(87) International Publication No	: NA
(61) Patent of Addition to Application Number	:NA
Filing Date	:NA
(62) Divisional to Application Number	:NA
Filing Date	:NA

(71)**Name of Applicant :**
1)INDIAN INSTITUTE OF TECHNOLOGY ROORKEE
Address of Applicant :Roorkee Uttarakhand India
(72)**Name of Inventor :**
1)GARIMA BHANDARI
2)YUNUS PIRJADE
3)PROF. PUSHPARAJ MANI PATHAK
4)JUNG-MIN YANG

(57) Abstract :
Present invention relates to a soft actuator to be used in interface with mechanical systems for achieving flexibility as present in nature. It aims to have human like interaction of mechanical systems with the objects to be handled. The actuator includes a flexible bellow structure attached to the pneumatic power supply, which is capable of air supply and removal simultaneously. The elastic chambers which form the flexible bellow structure inflate like balloons when air is supplied to it. The actuator finds on-field application in inspection, search, and rescue, manufacturing and medical field.

No. of Pages : 25 No. of Claims : 8

(12) PATENT APPLICATION PUBLICATION
(19) INDIA
(22) Date of filing of Application :22/12/2020
(21) Application No.202011055868 A
(43) Publication Date : 05/03/2021

(54) Title of the invention : UNTETHERED SOFT SNAKE ROBOT

(51) International classification	:A47L0011400000, B25J0009060000, B25J0009100000, B25J0019000000, B65D0005020000
(31) Priority Document No	:NA
(32) Priority Date	:NA
(33) Name of priority country	:NA
(86) International Application No	:NA
Filing Date	:NA
(87) International Publication No	: NA
(61) Patent of Addition to Application Number	:NA
Filing Date	:NA
(62) Divisional to Application Number	:NA
Filing Date	:NA

(71)**Name of Applicant :**
1)INDIAN INSTITUTE OF TECHNOLOGY ROORKEE
Address of Applicant :ROORKEE Uttarakhand India
(72)**Name of Inventor :**
1)GARIMA BHANDARI
2)YUNUS PIRJADE
3)PROF. PUSHPARAJ MANI PATHAK
4)IAN WILFRED NORONHA
5)JUNG-MIN YANG

(57) Abstract :
Present invention relates to a soft snake robot to be used in the on-field application of inspection, search, and rescue. The snake robot includes a soft actuator attached to the rigid box containing a two-way mini air pump, which is capable of air and suction supply simultaneously. The elastic chambers which form the soft actuator inflate like balloons when air is supplied to it; the bristles provided at the base of rigid box aid in the forward movement.

No. of Pages : 24 No. of Claims : 5

(12) PATENT APPLICATION PUBLICATION
(21) Application No.202111000114 A
(19) INDIA
(22) Date of filing of Application :02/01/2021
(43) Publication Date : 05/03/2021

(54) Title of the invention : INDUSTRIAL INTERNET OF THINGS (IIOT) ENABLED SMART EGG INCUBATOR

(51) International classification	:H04L0029080000, A61G0011000000, A01K0041040000, A01K0041020000, A01K0041060000	(71)**Name of Applicant :** **1)Rishabh Gupta** Address of Applicant :S/O Adesh Kumar Gupta, H. No .1317/1, Hargolal Road , Ambala Cantt, Ambala, Haryana-133001, India. Haryana India
(31) Priority Document No	:NA	(72)**Name of Inventor :**
(32) Priority Date	:NA	**1)Rishabh Gupta**
(33) Name of priority country	:NA	**2)Vishal Gupta**
(86) International Application No	:NA	**3)Udit Kansal**
Filing Date	:NA	**4)Varun Gupta**
(87) International Publication No	: NA	
(61) Patent of Addition to Application Number	:NA	
Filing Date	:NA	
(62) Divisional to Application Number	:NA	
Filing Date	:NA	

(57) Abstract :
The present subject matter refers to an IIoT Enabled Smart Egg Incubator method which includes the steps of calculating the exact uptime of the incubator; storing the heartbeat event when the incubator has power; calculating, by a sensor, the exact temperature of the incubator at every moment; calculating, by a sensor, the exact humidity of the incubator at every moment; starting the backup heating unit, in case of any failure to maintain the temperature; identifying the missing cycle of the egg turning and starting the egg turning system; notifying the user about the completion of the process and starting the buzzer; and providing a high resolution image of the eggs to the user.

No. of Pages : 16 No. of Claims : 10

(12) PATENT APPLICATION PUBLICATION
(21) Application No.202111002707 A
(19) INDIA
(22) Date of filing of Application :20/01/2021
(43) Publication Date : 05/03/2021

(54) Title of the invention : MAGNUM PRO FORGED SCAFFOLDING CASTOR

(51) International classification	:B60B0033000000, B44C0005020000, A23F0005100000, A23F0005080000, A61K0036470000	(71)**Name of Applicant :** **1)RAHUL GUPTA** Address of Applicant :ROYAL TECH ENGINEERS , PLOT NO. 70 , IDC , MEHRAULI ROAD , GURUGRAM , HARYANA - 122007, INDIA Haryana India
(31) Priority Document No	:NA	(72)**Name of Inventor :**
(32) Priority Date	:NA	**1)RAHUL GUPTA**
(33) Name of priority country	:NA	
(86) International Application No	:NA	
Filing Date	:NA	
(87) International Publication No	: NA	
(61) Patent of Addition to Application Number	:NA	
Filing Date	:NA	
(62) Divisional to Application Number	:NA	
Filing Date	:NA	

(57) Abstract :
In the present invention ,The outer ring is welded on the U Clamp and the pillar - Inner ring sub assy. is locked to the outer ring through use of enclosed steel balls . Then In U clamp , Brake Sub Assembly is inserted and affixed by rivets . In U clamp , there is a brake U clamp which is affixed by a longer Rivet . After that wheel is affixed by nut , bolts , bush and washer . Pick the right size :- A good rule of thumb here is that the larger the scaffolding castor wheel diameter is, the more it will resist obstacles and provide durability. Think about the braking system :- A good braking system will help boost the security and it will also eliminate many obstacles that can arise. The more you focus on implementing a good braking system, the better the payoff that you will have in the end. Selecting brackets:- Brackets can have a certain orientation or a universal direction. You can get galvanizing, nickel plated brackets. Installation method :- Depending on the scaffolding process, you will have to focus on a certain load. That€™s why the installation process is very important, since it can make a huge difference. The most important aspect here is making sure that you have a seamless, fast installation system.

No. of Pages : 0 No. of Claims : 0

(12) PATENT APPLICATION PUBLICATION
(21) Application No.202111002999 A
(19) INDIA
(22) Date of filing of Application :21/01/2021
(43) Publication Date : 05/03/2021

(54) Title of the invention : SUSTAINABLE ELECTRICITY GENERATION SYSTEM SYSTEM

(51) International classification	:F03G0007080000, H01M0010460000, H01M0008065600, H01L0031042000, H01M0008066800	(71)**Name of Applicant :** **1)Desh Bhagat University** Address of Applicant :NH1, Mandi Gobindgarh, Punjab 147301, India. Punjab India (72)**Name of Inventor :** **1)Dr. Inderpreet Kaur** **2)Dr. Manpreet Singh Manna** **3)Dr. Amandeep Singh Oberoi** **4)Dr. Sunil Kumar Singla**
(31) Priority Document No	:NA	
(32) Priority Date	:NA	
(33) Name of priority country	:NA	
(86) International Application No	:NA	
Filing Date	:NA	
(87) International Publication No	: NA	
(61) Patent of Addition to Application Number	:NA	
Filing Date	:NA	
(62) Divisional to Application Number	:NA	
Filing Date	:NA	

(57) Abstract :
A sustainable electricity generation system including a solar module 1 installed at public lavatory for generating electricity during day, a urine storage tank embodied within the lavatory for storing urinated solution, a gas production chamber 2 having at least two electrodes 6, 7 and connected to the tank, receiving urinated solution through an electromechanical valve to produce hydrogen gas ultimately stored in a compressed gas cylinder 3, a chemical sensor fabricated in the chamber to detect urea concentration which is maintained in the chamber through a microcontroller directing the valve, an imaging unit installed in the chamber for detecting working capacity of the electrodes, an electrode replacement unit 10 fitted to the chamber for replacing electrodes based on their working capacity, and an energy generation module 4 connected to the cylinder for utilizing hydrogen gas along with atmospheric oxygen to generate voltage for power consumption by the lavatory at night.

No. of Pages : 16 No. of Claims : 5

(12) PATENT APPLICATION PUBLICATION
(21) Application No.202111003004 A
(19) INDIA
(22) Date of filing of Application :21/01/2021
(43) Publication Date : 05/03/2021

(54) Title of the invention : SMART ADJUSTABLE SUPPORT SYSTEM

(51) International classification	:A61N0002000000, A61N0007000000, A47C0021040000, A47C0027100000, A47C0020040000	(71)**Name of Applicant :** **1)Desh Bhagat University** Address of Applicant :NH1, Mandi Gobindgarh, Punjab-147301, India Punjab India (72)**Name of Inventor :** **1)Dr. Shalini Gupta**
(31) Priority Document No	:NA	
(32) Priority Date	:NA	
(33) Name of priority country	:NA	
(86) International Application No	:NA	
Filing Date	:NA	
(87) International Publication No	: NA	
(61) Patent of Addition to Application Number	:NA	
Filing Date	:NA	
(62) Divisional to Application Number	:NA	
Filing Date	:NA	

(57) Abstract :
A smart adjustable support system comprises a bed 1 equipped with multiple adjustable compartments that coupled with each other for providing support to user€™s body, wherein multiple electromagnets are installed over a base2 to generate an electromagnetic field that levitate the bed 1, multiple motorized arrangements 5coupled with the compartments to bend the bed 1 to form a desired support portions, a temperature adjustable unit installed within each of the compartment provide heating and cooling in a desired portion of the bed 1, wherein a sensor is mounted over the bed to detect surrounding temperature, a thermo graphic image capturing module 4 mounted over the bed 1 to identify emotional state of user, an electromagnetic pulse device installed on the bed 1 to stimulate nerve cells of the user for changing emotional state of the user, and an ultrasonic therapeutic device embodied within the bed 1.

No. of Pages : 16 No. of Claims : 10

(12) PATENT APPLICATION PUBLICATION
(21) Application No.202111003005 A
(19) INDIA
(22) Date of filing of Application :21/01/2021
(43) Publication Date : 05/03/2021

(54) Title of the invention : THREAT BASED SAFEGUARDING SYSTEM

(51) International classification	:H04L0029060000, E06B0009680000, H01L0029040000, E06B0009320000, G06Q0050260000	(71)**Name of Applicant :** **1)Desh Bhagat University** Address of Applicant :NH1, Mandi Gobindgarh, Punjab-147301, India Punjab India
(31) Priority Document No	:NA	(72)**Name of Inventor :** **1)Dr. Shalini Gupta** **2)Dr. Zora Singh**
(32) Priority Date	:NA	
(33) Name of priority country	:NA	
(86) International Application No	:NA	
Filing Date	:NA	
(87) International Publication No	: NA	
(61) Patent of Addition to Application Number	:NA	
Filing Date	:NA	
(62) Divisional to Application Number	:NA	
Filing Date	:NA	

(57) Abstract :
A threat based safeguarding system including multiple wall shaped elements 1 installed parallel to a footpath wall 2, forming a camouflaged safety space for a user to hide in threatening situations, multiple omnidirectional wheels 3 attached to the elements for facilitating movement of the elements towards the user when the user provides a command through a portable user platform, multiple position sensors fabricated in the elements for detecting the elements€™ orientation while forming the space, a photographic unit 4 attached to the elements for visual authentication of the user before entering the space, multiple defense tools 5 installed with the elements for safeguarding the user against someone who tries to harm the user by entering the space and a telecommunication module integrated in the elements for notifying other people and police substation regarding the situation to seek assistance in safeguarding the user against the threat.

No. of Pages : 15 No. of Claims : 4

(12) PATENT APPLICATION PUBLICATION
(21) Application No.202111003006 A
(19) INDIA
(22) Date of filing of Application :21/01/2021
(43) Publication Date : 05/03/2021

(54) Title of the invention : OBJECT LOCATING SYSTEM

(51) International classification	:G08B0021020000, B65C0009420000, G08B0021240000, G06Q0010080000, H04L0029080000	(71)**Name of Applicant :** **1)Desh Bhagat University** Address of Applicant :NH1, Mandi Gobindgarh, Punjab-147301, India Punjab India (72)**Name of Inventor :** **1)Dr. Shalini Gupta**
(31) Priority Document No	:NA	
(32) Priority Date	:NA	
(33) Name of priority country	:NA	
(86) International Application No	:NA	
Filing Date	:NA	
(87) International Publication No	: NA	
(61) Patent of Addition to Application Number	:NA	
Filing Date	:NA	
(62) Divisional to Application Number	:NA	
Filing Date	:NA	

(57) Abstract :
An object locating system including multiple GPS based identification labels provisioned with unique codes pasted on several objects in a collective wireless network for identifying a particular object€™s location, a security resin applied on the objects along with the labels for detecting the object€™s position when the label is damaged, a thermographic camera linked to the finder for detecting object missing from a user€™s requirements and consecutively receiving recognition signals emitted by the labels to locate the missing object according to the user€™s daily routine, a finder linked to the labels, camera and microcontroller serving as a user platform for providing notification regarding location of the object and a location projector attached to the finder in connection with the camera through the microcontroller for displaying visual signals projecting a traceable path towards the object€™s location, helping the user to find the object instantaneously.

No. of Pages : 14 No. of Claims : 8

(12) PATENT APPLICATION PUBLICATION
(21) Application No.202111006459 A
(19) INDIA
(22) Date of filing of Application :16/02/2021
(43) Publication Date : 05/03/2021

(54) Title of the invention : PHYSICOCHEMICAL AND PHARMACOKINETIC ANALYSIS OF PNA DERIVATIVES AS INHIBITORS FOR CYCLIN DEPENDENT KINASE 2 (PDB:1W98) AND PROSTAGLANDIN H2 SYNTHASE-1 (PDB: 1EQG)

(51) International classification	:C07K0014000000, A61K0009510000, A61K0038000000, C07K0007060000, A61K0047620000
(31) Priority Document No	:NA
(32) Priority Date	:NA
(33) Name of priority country	:NA
(86) International Application No	:NA
Filing Date	:NA
(87) International Publication No	: NA
(61) Patent of Addition to Application Number	:NA
Filing Date	:NA
(62) Divisional to Application Number	:NA
Filing Date	:NA

(71)**Name of Applicant :**
1)Dr Anjali Gupta
Address of Applicant :School of Basic and Applied Sciences, Chemistry Division, Galgotias University. Plot No.2, Sector 17-Yamuna Expressway,GreaterNoida, Gautam Buddh Nagar,Uttar Pradesh,India. Uttar Pradesh India
2)Dr. Fahmina Zafar
3)Dr. Anujit Ghosal
4)Dr.Pinki Dey
(72)**Name of Inventor :**
1)Dr Anjali Gupta
2)Dr. Fahmina Zafar
3)Dr. Anujit Ghosal
4)Dr.Pinki Dey

(57) Abstract :
Peptide Nucleic Acid (PNA) are synthetic analogs of DNA /RNA and are very well known for their medicinal applications that range from antibacterial, antitumor, anticancer, antisense, and antigene agents. However, their poor cellular uptake creates a major hurdle for their usage as drugs. So different modifications on the basic PNA backbone are necessary that may act as ligation handle to improve their solubility. To explore the potential compounds for anticancer activities, a comprehensive study of drug-like properties of 50 modified PNA derivatives was done. Based on pharmacokinetic properties, eight compounds were docked against two cancer protein targets [PDB: 1W98 & 1EQG] and also compared with marketed anticancer drugs. PNA derivatives in the docked complex showed higher binding modes and binding interactions of incorporated -OH/-SH/-COOH groups in the basic backbone of the PNA derivatives may have been responsible for the improved activity against cancer targets and have shown promising results to become active drug ingredients against these protein targets. The reported results would be greatly helpful in the next step during the process of drug discovery against cancer.

No. of Pages : 23 No. of Claims : 9

(12) PATENT APPLICATION PUBLICATION
(21) Application No.202111007248 A
(19) INDIA
(22) Date of filing of Application :21/02/2021
(43) Publication Date : 05/03/2021

(54) Title of the invention : AN INNOVATIVE SMART IOT DEVICE TO MEASURE AND MONITOR PATIENT€™S CRITICAL PARAMETERS IN HOSPITALS.

(51) International classification	:A61B0005000000, A61B0005020500, A61B0005080000, A61B0005024000, A61B0005110000
(31) Priority Document No	:NA
(32) Priority Date	:NA
(33) Name of priority country	:NA
(86) International Application No	:NA
Filing Date	:NA
(87) International Publication No	: NA
(61) Patent of Addition to Application Number	:NA
Filing Date	:NA
(62) Divisional to Application Number	:NA
Filing Date	:NA

(71)**Name of Applicant :**
1)Dr. Naveen Rathee
Address of Applicant :IIMT College of Engineering (Dr. A P J Abdul Kalam Technical University) Greater Noida, India. E-mail: dean.sbit@gmail.com Uttar Pradesh India
2)Dr. Sandeep Kumar Gupta
3)Dr. Jaishanker Prasad Keshari
4)Dr. Gaurav Sinha
5)Dr. Manoj Rana
6)Ms.Varnika Rathee
7)Mr. Milind Gupta
(72)**Name of Inventor :**
1)Dr. Naveen Rathee
2)Dr. Sandeep Kumar Gupta
3)Dr. Jaishanker Prasad Keshari
4)Dr. Gaurav Sinha
5)Dr. Manoj Rana
6)Ms.Varnika Rathee
7)Mr. Milind Gupta

(57) Abstract :
In current scenario when a person gets under critical illness, an immediate hospitalization becomes necessary for seeking medical aid and in maximum cases; they are being transferred to ICU directly. In ICU the doctors want to continuously measure vital parameters to see the current condition and after seeing the test reports of the patient they go for further treatment. During this testing and monitoring the patient has to go through another hard time during their monitoring by the health care technician as there are different cables attached to the body for measuring (Blood Pressure, Heart Rate, ECG etc) on one side and CPU along with monitor on the other side. This makes patient very uncomfortable as his movements are restricted because any movement of the body can affect the accuracy of the parameters being monitored. The patient being in Uncomforted zone can lead to other issues and moreover in cases of some patients (Kids, Senior Citizens) it sometimes leads to stress, and other side effects.

No. of Pages : 7 No. of Claims : 6

(12) PATENT APPLICATION PUBLICATION
(21) Application No.202111007821 A
(19) INDIA
(22) Date of filing of Application :24/02/2021
(43) Publication Date : 05/03/2021

(54) Title of the invention : METHOD FOR IMPROVING THE SPECTRAL EFFICIENCY IN MULTIUSER MIMO 4G CELLULAR SYSTEM

(51) International classification	:H04B0007045200, H04B0007060000, H04L0001000000, H04B0007041700, H04W0072120000
(31) Priority Document No	:NA
(32) Priority Date	:NA
(33) Name of priority country	:NA
(86) International Application No	:NA
Filing Date	:NA
(87) International Publication No	: NA
(61) Patent of Addition to Application Number	:NA
Filing Date	:NA
(62) Divisional to Application Number	:NA
Filing Date	:NA

(71)**Name of Applicant :**
1)Dr Patteti Krishna
Address of Applicant :Netaji Subhas University of Technology East Campus (Formerly Ambedkar Institute of Advanced Communication Technologies and Research) Geeta Colony, New Delhi-110031 Delhi India
2)Dr Tipparti Anil Kumar
(72)**Name of Inventor :**
1)Dr Patteti Krishna
2)Dr Tipparti Anil Kumar

(57) Abstract :
Aspects of the present disclosure relate to the system (200) performance metric such as spectrum efficiency and scheduling for enhancements of multiuser MIMO LTE systems (200) was studied and analyzed. Further, these performances were studied under different channel conditions, capacity analysis; transmit diversity, spatial multiplexing and sum rate calculation used to enhance the performance of LTE systems (200). A method for improving the spectral efficiency in MU MIMO OFDM LTE system (200). The performance of proposed MU-MIMO LTE systems (200) with above considerations were analyzed by block error rate (BLER), bit error rate (BER), throughput, mean square error (MSE) and sum capacity under different signal to noise ratios (SNR). Finally, simulations results are provided.

No. of Pages : 26 No. of Claims : 7

(12) PATENT APPLICATION PUBLICATION
(21) Application No.202111007852 A
(19) INDIA
(22) Date of filing of Application :24/02/2021
(43) Publication Date : 05/03/2021

(54) Title of the invention : FEATHER CLEANING AND REMOVING DEVICE FOR POULTRY BIRDS DEVICE FOR POULTRY BIRDS

(51) International classification	:A22C0021020000, B08B0001000000, A22C0021040000, A22C0021000000, A01K0031040000	(71)**Name of Applicant :** **1)Teerthanker Mahaveer University** Address of Applicant :N.H.-24, Delhi Road, Moradabad, Uttar Pradesh 244001, India. Uttar Pradesh India
(31) Priority Document No	:NA	(72)**Name of Inventor :** **1)Ajay Chakravarty**
(32) Priority Date	:NA	**2)Dr. Pankaj Goswami**
(33) Name of priority country	:NA	**3)Rahul Vishnoi**
(86) International Application No	:NA	**4)Dr. Parag Agarwal**
Filing Date	:NA	
(87) International Publication No	: NA	
(61) Patent of Addition to Application Number	:NA	
Filing Date	:NA	
(62) Divisional to Application Number	:NA	
Filing Date	:NA	

(57) Abstract :
A feather cleaning and removing device for poultry birds, comprising a frame 1 mounted with a cylindrical body 2 divided into a first and second compartment 3, 4 for accommodating multiple poultry birds within the body 2, a heating element 5 for heating water stored within the first compartment 3 to soften out feathers from the bird€™s follicle, a slider plate 6 installed beneath the first compartment 3 that opens up to transfer the scalded birds into the second compartment 4, multiple plucker rubbers 7 in conjunction with a motorized rotatable base 8 that rotates the rubbers 7 in a circular manner to remove the scalded bird€™s feathers, a dust sensor 9 for sensing presence of dust/dirt after removal of scalded bird€™s feathers integrated with a controller that generates a command to actuate multiple nozzles for spraying sanitizing liquids to disinfect the second compartments 4.

No. of Pages : 16 No. of Claims : 10

(12) PATENT APPLICATION PUBLICATION
(19) INDIA
(22) Date of filing of Application :24/02/2021
(21) Application No.202111007853 A
(43) Publication Date : 05/03/2021

(54) Title of the invention : AUTOMATED FOOD PROCESSING DEVICE

(51) International classification	:A47J0044000000, A21C0001140000, A21D0002180000, A47J0037120000, B63B0025080000
(31) Priority Document No	:NA
(32) Priority Date	:NA
(33) Name of priority country	:NA
(86) International Application No	:NA
Filing Date	:NA
(87) International Publication No	: NA
(61) Patent of Addition to Application Number	:NA
Filing Date	:NA
(62) Divisional to Application Number	:NA
Filing Date	:NA

(71)**Name of Applicant :**
1)Teerthanker Mahaveer University
Address of Applicant :N.H.-24, Delhi Road, Moradabad, Uttar Pradesh 244001, India. Uttar Pradesh India
(72)**Name of Inventor :**
1)Sakshi Singh
2)Neeraj Kaushik
3)Shri Bhagwan
4)Amit Shukla

(57) Abstract :
An automated food processing device comprises of a first chamber 1 installed with multiple containers 2 storing various types of flavours, wherein as per the user€™s requirement a valve of particular container actuates to discharge the flour out of said containers 2, multiple dropping cups 12 that pours flour into chamber 1, a primary motorized slider 13 that actuates to to swipe the flour and shift towards an end of the chamber 1, a second chamber 7 attached in continuation with the first chamber 1, having water and oil reservoir 3, 5 that discharges water and oil in a particular amount to gelatinize the flour, secondary motorized slider integrated with second chamber 7 that actuates to press doe through grill that converts the doe into ribbon structure, a third chamber 8 that consists of a water canister 10 into which the ribbon shaped doe mixes for cooking process.

No. of Pages : 13 No. of Claims : 10

(12) PATENT APPLICATION PUBLICATION
(21) Application No.202111007854 A
(19) INDIA
(22) Date of filing of Application :24/02/2021
(43) Publication Date : 05/03/2021

(54) Title of the invention : SMART PERIPHERAL DEVICE

(51) International classification	:A61B0005000000, F02M0057000000, G06K0009000000, A61H0023020000, A61H0007000000
(31) Priority Document No	:NA
(32) Priority Date	:NA
(33) Name of priority country	:NA
(86) International Application No	:NA
Filing Date	:NA
(87) International Publication No	: NA
(61) Patent of Addition to Application Number	:NA
Filing Date	:NA
(62) Divisional to Application Number	:NA
Filing Date	:NA

(71)**Name of Applicant :**
1)Teerthanker Mahaveer University
Address of Applicant :N.H.-24, Delhi Road, Moradabad, Uttar Pradesh 244001, India. Uttar Pradesh India
(72)**Name of Inventor :**
1)Mahir Hussain
2)Sunil Kumar Gaur
3)Vineet Saxena
4)Dr. Kirti Shukla

(57) Abstract :
A smart peripheral device comprising, a perforated handheld body 1 that maneuvered by user over a surface, a pressure sensor 2 installed over body 1 to detect user€™s hand placed over body 1, multiple pairs of motorized rollers 3 with massaging nodes 4 are attached with body 1 to provides massage over user€™s palm, a primary sensor 5 attached with body 1 to detect presence of sweat on user€™s palm, a motorized fan inscribed within body 1 and actuated upon detection of sweat to dry detected sweat over user€™s palm, a display unit 6 mounted over body 1 to receive manual input from user to switch ON/OFF device, a secondary sensor 7 fabricated over body 1 that detects vital parameters of user, upon detecting unusual conditions microcontroller disables manual control of device and enables automatic control to provide personalized massage and air circulation to improve the health condition of user.

No. of Pages : 13 No. of Claims : 6

(12) PATENT APPLICATION PUBLICATION
(21) Application No.202111007855 A
(19) INDIA
(22) Date of filing of Application :24/02/2021
(43) Publication Date : 05/03/2021

(54) Title of the invention : SMART SKIN CLEANING DEVICE

(51) International classification	:A47K0007020000, A61Q0019100000, A47K0007030000, H04N0005660000, F24F0110000000
(31) Priority Document No	:NA
(32) Priority Date	:NA
(33) Name of priority country	:NA
(86) International Application No	:NA
Filing Date	:NA
(87) International Publication No	: NA
(61) Patent of Addition to Application Number	:NA
Filing Date	:NA
(62) Divisional to Application Number	:NA
Filing Date	:NA

(71)**Name of Applicant :**
1)Teerthanker Mahaveer University
Address of Applicant :N.H.-24, Delhi Road, Moradabad, Uttar Pradesh 244001, India. Uttar Pradesh India
(72)**Name of Inventor :**
1)K B Anand
2)Harish Kumar
3)Ankit Gupta
4)Mohan Vishal Gupta

(57) Abstract :
A smart skin cleaning device, comprising an elongated body 1 having a first and second side(s) 2, 3, wherein a rectangular loofah covered via a foldable soft foam 4 and mounted on surface of first side 2, a pH sensor 5 mounted on first side 2 that determines pH value of soap or gel, wherein upon determining pH value equal to threshold value controller command to a motor to uncover loofah 15, a chamber 12 having a nozzle 13 and valve 14 and embedded within rectangular loofah 15 to hold deionized (DI) water, a detachable rod 8 having display panel 9 attached with said second side 3 to determine pH of user skin, a motor coupled with loofah 15 to maintain pressure of loofah 15 and a bristle bar 16 having first and second section(s) 17, 18 placed within loofah 15 to rotate sections 17, 18 through a motor.

No. of Pages : 15 No. of Claims : 9

(12) PATENT APPLICATION PUBLICATION
(21) Application No.202111007856 A
(19) INDIA
(22) Date of filing of Application :24/02/2021
(43) Publication Date : 05/03/2021

(54) Title of the invention : AUTOMATIC CURRENCY PROTECTION AND STORAGE DEVICE

(51) International classification	:G06Q0020340000, G06Q0020320000, G07F0019000000, G06K0019077000, G07D0011000000
(31) Priority Document No	:NA
(32) Priority Date	:NA
(33) Name of priority country	:NA
(86) International Application No	:NA
Filing Date	:NA
(87) International Publication No	: NA
(61) Patent of Addition to Application Number	:NA
Filing Date	:NA
(62) Divisional to Application Number	:NA
Filing Date	:NA

(71)**Name of Applicant :**
1)Teerthanker Mahaveer University
Address of Applicant :N.H.-24, Delhi Road, Moradabad, Uttar Pradesh 244001, India. Uttar Pradesh India
(72)**Name of Inventor :**
1)Dr. Kirti Shukla
2)Dr. Gulista Khan
3)Prashant Kumar
4)Dr. Pankaj Goswami
5)Ratnesh Shukla

(57) Abstract :
An automatic currency protection and storage device comprising, a body 1 segregated into multiple slots 2 for storing currency notes and payment cards separately, an AI camera 3 attached to body 1 that detects amount in correlation with monetary value of notes, a note positioning unit configured inside body 1 linked to slots for automatically storing notes in currency based segregated slots, a communication module fitted in body 1, wirelessly connecting cards to web based common payment interface for retrieving information regarding monetary value in cards, an input module accessed by user for entering desired amount for making transaction and microcontroller processes monetary value in correlation with amount by user for evaluating applicable mode of payment, a display unit 5 attached to body 1 for providing information regarding monetary value of notes and cards, an authentication module incorporated in body1 for biometric authentication of user before making payment.

No. of Pages : 14 No. of Claims : 8

(12) PATENT APPLICATION PUBLICATION
(21) Application No.202111007858 A
(19) INDIA
(22) Date of filing of Application :24/02/2021
(43) Publication Date : 05/03/2021

(54) Title of the invention : BORE WELL RESCUING DEVICE

(51) International classification	:G01G0019440000, G01G0019500000, A47C0007620000, A61G0005140000, B65B0043460000
(31) Priority Document No	:NA
(32) Priority Date	:NA
(33) Name of priority country	:NA
(86) International Application No	:NA
Filing Date	:NA
(87) International Publication No	: NA
(61) Patent of Addition to Application Number	:NA
Filing Date	:NA
(62) Divisional to Application Number	:NA
Filing Date	:NA

(71)**Name of Applicant :**
1)Teerthanker Mahaveer University
Address of Applicant :N.H.-24, Delhi Road, Moradabad, Uttar Pradesh 244001, India. Uttar Pradesh India
(72)**Name of Inventor :**
1)Sakshi Singh
2)Rahul Vishnoi
3)Dr. Pankaj Goswami
4)Neeraj Kaushik

(57) Abstract :
A borewell rescuing device, comprising a body 1 installed with a primary telescopic rod 2 that extends or retracts inside the borewell, furthermore the primary rod is mounted on a lead screw arrangement 3 that provides a moving platform to the rod, an AI(Artificial Intelligence) camera 4 arranged with a suction cup 5 for detecting head position of the user and transmitting the data to a microcontroller, furthermore the suction cup 5 is connected with a clamp 6 that functions collectively for providing a grip to lift the user, a secondary telescopic rod 7 attached with a motorized plate 8 for extending beneath the user and further the plate provides a seating platform to the user, a weight sensor for measuring weight of the user upon sitting on the plate 8 and upon measuring of weight, the microcontroller actuates the rods to retract in order to pull out the user.

No. of Pages : 17 No. of Claims : 10

(12) PATENT APPLICATION PUBLICATION
(21) Application No.202111007859 A
(19) INDIA
(22) Date of filing of Application :24/02/2021
(43) Publication Date : 05/03/2021

(54) Title of the invention : MULTIPURPOSE HENNA PRINTING DEVICE

(51) International classification	:A61K0036185000, F04B0043040000, F16K0031000000, A61J0007000000, A61K0008970000	(71)**Name of Applicant :** **1)Teerthanker Mahaveer University** Address of Applicant :N.H.-24, Delhi Road, Moradabad, Uttar Pradesh 244001, India. Uttar Pradesh India
(31) Priority Document No	:NA	(72)**Name of Inventor :**
(32) Priority Date	:NA	**1)Dr. Garima Goswami**
(33) Name of priority country	:NA	**2)Pradeep Kumar Verma**
(86) International Application No	:NA	**3)Sunil Kumar**
Filing Date	:NA	**4)Dr. Rajeev Kumar**
(87) International Publication No	: NA	**5)Navneet Vishnoi**
(61) Patent of Addition to Application Number	:NA	
Filing Date	:NA	
(62) Divisional to Application Number	:NA	
Filing Date	:NA	

(57) Abstract :
A multipurpose henna printing device, comprising, a chamber 1 integrated with a weight sensor to store raw henna leaves and sensor determines weight of leaves and transmits detected value to a microcontroller, a water inlet valve fabricated with an electronic controlled valve and attached with chamber, wherein valve dispense water, a grinding unit installed inside chamber 1 actuated via microcontroller to grind leaves and form a semi-solid henna solution, a sensing module integrated with unit that determines ph value of solution, a primary container 2 stored with DI water and connected at first side of chamber 1 and embodied with an electrode rod 3 positioned over a user€™s hand to determine ph value and a pump integrated into chamber 1 actuated upon receiving command from microcontroller to transfer solution to a vessel 4 fabricated with a detachable stencil, wherein user places hand over stencil for applying henna solution.

No. of Pages : 13 No. of Claims : 5

(12) PATENT APPLICATION PUBLICATION
(21) Application No.202111007860 A
(19) INDIA
(22) Date of filing of Application :24/02/2021
(43) Publication Date : 05/03/2021

(54) Title of the invention : SMART ILLUMINATING SYSTEM FOR COLOR BLIND PATIENTS BLIND PATIENTS

(51) International classification	:G06F0003010000, H05B0047190000, G07C0009370000, F21V0033000000, G08B0025100000	(71)**Name of Applicant :** **1)Teerthanker Mahaveer University** Address of Applicant :N.H.-24, Delhi Road, Moradabad, Uttar Pradesh 244001, India. Uttar Pradesh India
(31) Priority Document No	:NA	(72)**Name of Inventor :** **1)Dr. Garima Goswami**
(32) Priority Date	:NA	**2)Rahul Vishnoi**
(33) Name of priority country	:NA	**3)Dr. Ajay Upadhyay**
(86) International Application No	:NA	**4)Rajendra Prasad Pandey**
Filing Date	:NA	
(87) International Publication No	: NA	
(61) Patent of Addition to Application Number	:NA	
Filing Date	:NA	
(62) Divisional to Application Number	:NA	
Filing Date	:NA	

(57) Abstract :
A smart illuminating system for color blind patients, comprising a frame 1 installed with an artificial intelligent based image processing module 2 for capturing images of a user€™s iris and processes the captured images to monitor iris movement of the user, a database linked to a microcontroller for storing medical reports of the user that communicates the medical reports to the microcontroller via a communication module, multiple colored lights 3 for illuminating surrounding of the frame 1 integrated with the microcontroller that generates a relative command to produce a particular light based on the medical reports of the user, the microcontroller connected to a motor that generates a command to rotate the motor for moving the frame 1 in order to increase light intensity produced by the colored lights 3 on the surrounding according to monitored iris position of the user.

No. of Pages : 15 No. of Claims : 10

(12) PATENT APPLICATION PUBLICATION
(21) Application No.202111007861 A
(19) INDIA
(22) Date of filing of Application :24/02/2021
(43) Publication Date : 05/03/2021

(54) Title of the invention : SMART MAINTENANCE DEVICE FOR PIPES

(51) International classification	:B08B0003120000, B05B0012000000, G01D0021000000, B08B0009043000, B05B0009040000	(71)**Name of Applicant :** **1)Teerthanker Mahaveer University** Address of Applicant :N.H.-24, Delhi Road, Moradabad, Uttar Pradesh 244001, India. Uttar Pradesh India
(31) Priority Document No	:NA	(72)**Name of Inventor :**
(32) Priority Date	:NA	**1)Kamal Kumar Gola**
(33) Name of priority country	:NA	**2)Sakshi Singh**
(86) International Application No	:NA	**3)Rahul Vishnoi**
Filing Date	:NA	**4)Dr. Pankaj Goswami**
(87) International Publication No	: NA	**5)Prashant Kumar**
(61) Patent of Addition to Application Number	:NA	
Filing Date	:NA	
(62) Divisional to Application Number	:NA	
Filing Date	:NA	

(57) Abstract :
A smart maintenance device for pipes, comprising a body 1 bifurcated into multiple compartments 14 that stores multiple liquids such as a paint or cleaning solutions, multiple telescopic rods 2 associated with the body 1 to hold the device and provide linear movement via a controller, multiple propellers 4 attached with body 1 to provide multidirectional movement to device by receiving signal from controller, an AI camera 5 mounted on body 1 to identify conditions of pipe and sends data to controller, multiple spikes 6 mounted over telescopic conduit 7 to rub pipe for cleaning and plurality of nozzles 8 are mounted over motorized telescopic conduit 7 to dispense paint or cleaning solution over pipe, wherein a blower unit associated with telescopic conduit 7 for drying pipe upon detection of condition via controller.

No. of Pages : 16 No. of Claims : 9

(12) PATENT APPLICATION PUBLICATION
(21) Application No.202111007862 A
(19) INDIA
(22) Date of filing of Application :24/02/2021
(43) Publication Date : 05/03/2021

(54) Title of the invention : INTELLIGENT DOOR LOCK SYSTEM

(51) International classification	:G07C0009000000, G06K0009000000, G06F0021320000, E05B0045060000, E05B0047020000	(71)**Name of Applicant :** **1)Teerthanker Mahaveer University** Address of Applicant :N.H.-24, Delhi Road, Moradabad, Uttar Pradesh 244001, India. Uttar Pradesh India
(31) Priority Document No	:NA	(72)**Name of Inventor :**
(32) Priority Date	:NA	**1)Umesh K. Singh**
(33) Name of priority country	:NA	**2)Raghuvendra K. Singh**
(86) International Application No	:NA	**3)Prashant Kumar**
Filing Date	:NA	**4)Dr. Pankaj Goswami**
(87) International Publication No	: NA	**5)Anun Gupta**
(61) Patent of Addition to Application Number	:NA	**6)Navneet Vishnoi**
Filing Date	:NA	
(62) Divisional to Application Number	:NA	
Filing Date	:NA	

(57) Abstract :
An intelligent door lock system, comprising a frame 1 installed along periphery of a door 2, furthermore the frame 1 is crafted with multiple slots 3 configured to receive a locking bar 5, a vertical lead screw arrangement 4 operated through a control panel for translating the locking bar 5, a casing 6 employed with a motorized shield for adaptively receiving the control panel, wherein the shield is affixed with an AI(artificial intelligence) camera 7 that captures and authenticates the facial images of person arriving at the door 2, a Bluetooth module for exchanging and recognizing Bluetooth beacons with a computing device of a user, fingerprint sensor for scanning and comparing fingerprint of the user, an OTP (one time password generator) for sending a passcode to the user and a microcontroller that deactivates the locking bar 5 upon successful authentications.

No. of Pages : 15 No. of Claims : 7

(12) PATENT APPLICATION PUBLICATION
(21) Application No.202111007895 A
(19) INDIA
(22) Date of filing of Application :25/02/2021
(43) Publication Date : 05/03/2021

(54) Title of the invention : HPLC METHOD DEVELOPMENT AND VALIDATION FOR ESTIMATION OF CANAGLIFLOZIN IN BULK AND MARKETED DOSAGE FORM

(51) International classification	:C07D0409100000, G01N0030020000, A61K0009160000, A61K0009510000, A61K0031704200
(31) Priority Document No	:NA
(32) Priority Date	:NA
(33) Name of priority country	:NA
(86) International Application No	:NA
Filing Date	:NA
(87) International Publication No	: NA
(61) Patent of Addition to Application Number	:NA
Filing Date	:NA
(62) Divisional to Application Number	:NA
Filing Date	:NA

(71)**Name of Applicant :**
1)Mrs. Asmita Vikas Gaikwad
Address of Applicant :Research Scholar Suresh Gyan Vihar University & (Assistant Professor, SGMSPMs, Sharadchandra Pawar College of Pharmacy, Dumbarwadi, Pune), Mahal Jagatpura Jaipur 302017 Rajasthan India Rajasthan India
2)Dr. Preeti Khulbe
3)Dr. Ganesh Yogiraj Dama
4)Dr. Manojkumar Mukundrao Nitalikar
(72)**Name of Inventor :**
1)Mrs. Asmita Vikas Gaikwad
2)Dr. Preeti Khulbe
3)Dr. Ganesh Yogiraj Dama
4)Dr. Manojkumar Mukundrao Nitalikar

(57) Abstract :
The present invention relates to an efficient and simple HPLC method developed and validated for the determination of anti-diabetic drug canagliflozin in marketed formulations containing canagliflozin.

No. of Pages : 21 No. of Claims : 8

(12) PATENT APPLICATION PUBLICATION
(21) Application No.202111007901 A
(19) INDIA
(22) Date of filing of Application :25/02/2021
(43) Publication Date : 05/03/2021

(54) Title of the invention : SYSTEMS AND METHOD TO PREVENT FRAUD DURING EMISSION LEVEL CERTIFICATE GENERATION OF VEHICLE

(51) International classification	:G08G0001017000, F01N0013080000, F01N0003200000, G06K0019077000, G06K0019070000
(31) Priority Document No	:NA
(32) Priority Date	:NA
(33) Name of priority country	:NA
(86) International Application No	:NA
Filing Date	:NA
(87) International Publication No	: NA
(61) Patent of Addition to Application Number	:NA
Filing Date	:NA
(62) Divisional to Application Number	:NA
Filing Date	:NA

(71)**Name of Applicant :**
1)Dr. Mayank Kumar Goyal
Address of Applicant :Upper Ground Floor, Plot No. - A - 225 , Block-A, New Panchwati Colony, Ghaziabad, Uttar Pradesh, India 201001 Uttar Pradesh India
(72)**Name of Inventor :**
1)Dr. Mayank Kumar Goyal
2)Dr. Nitin Rakesh
3)Dr. Mandeep Kaur
4)Dr. Ritika Wason
5)Dr. Rashmi Kushwah
6)Dr. Geetanjali Rathee
7)Dr. Naveen Jaglan
8)Abha Kiran Rajpoot
9)Neha Tyagi
10)Dr. Shailendra Kumar Tripathi
11)Dr. Shikha Mehta

(57) Abstract :
Embodiments of the present disclosure may include a method for the evaluation of exhaust emission of a vehicle, the method may include inserting, a sensor unit into a tailpipe of the vehicle. In some embodiments, the tailpipe may be arranged to discharge a gas stream of engine exhaust. Embodiments may also include measuring, a concentration level of one or more exhaust matters, through one or more sensors. Embodiments may also include receiving, registration information of the vehicle, from a Radio Frequency Identification (RFID), through an RFID reader. In some embodiments, the RFID tag may include a memory unit which may be arranged to store registration information of the vehicle. In some embodiments, the registration information of the vehicle may include number plate information and colour of the vehicle.

No. of Pages : 8 No. of Claims : 10

(12) PATENT APPLICATION PUBLICATION
(21) Application No.202111007907 A
(19) INDIA
(22) Date of filing of Application :25/02/2021
(43) Publication Date : 05/03/2021

(54) Title of the invention : REDUNTANT SYSTEM (SINGLE UNIT WITH IMPERFECT SWITCH-OVER DEVICE) HAVING AVAILABILITY MEASURES AND PROFIT OPTIMIZATION

(51) International classification	:G06F0011140000, G06F0011200000, G06Q0010060000, G05B0023020000, H04L0012437000	(71)**Name of Applicant :** **1)REENA GARG** Address of Applicant :H.No.: 2538, Sec 16, Faridabad, Haryana, India-121002 Haryana India (72)**Name of Inventor :** **1)REENA GARG**
(31) Priority Document No	:NA	
(32) Priority Date	:NA	
(33) Name of priority country	:NA	
(86) International Application No	:NA	
Filing Date	:NA	
(87) International Publication No	: NA	
(61) Patent of Addition to Application Number	:NA	
Filing Date	:NA	
(62) Divisional to Application Number	:NA	
Filing Date	:NA	

(57) Abstract :
Described herein is a system (200) for inspection of the breakdown of a reduntant system (single unit with imperfect switch over device) reveals the feasibility of the machine under the supervision of either ordinary or expert repairmen. Two types of faults are revealed by the repairmen, either minor or major. Minor faults are repaired immediately by the same repairmen, but whenever a major fault is held, the machine's fault will be handled by an expert person. The present system determines mean-time for system failure, availability, and profit using Regenerative point graphical technique. (RPGT).

No. of Pages : 24 No. of Claims : 4

(12) PATENT APPLICATION PUBLICATION
(21) Application No.202111007952 A
(19) INDIA
(22) Date of filing of Application :25/02/2021
(43) Publication Date : 05/03/2021

(54) Title of the invention : SMART WATER DISPENSING DEVICE

(51) International classification	:C02F0009000000, E03C0001050000, A61J0007000000, B67D0001000000, A01K0061100000
(31) Priority Document No	:NA
(32) Priority Date	:NA
(33) Name of priority country	:NA
(86) International Application No	:NA
Filing Date	:NA
(87) International Publication No	: NA
(61) Patent of Addition to Application Number	:NA
Filing Date	:NA
(62) Divisional to Application Number	:NA
Filing Date	:NA

(71)**Name of Applicant :**
1)Dr. Manpreet Singh Manna
Address of Applicant :Associate Professor, Department of Electrical and Instrumentation Engineering, Sant Longowal Institute of Engineering & Technology, Longowal, Punjab-148106 India. Punjab India
(72)**Name of Inventor :**
1)Dr. Manpreet Singh Manna
2)Dr. Inderpreet Kaur
3)Dr. Charanjeev Gupta
4)Tanya Garg
5)Amandeep Kaur
6)Pardeep Kumar
7)Dr. Gurvinder Kaur

(57) Abstract :
A smart water dispensing device comprising, multiple containers 1, 2, 3 linked to a purification unit 4 for receiving purified water, each of containers 1, 2, 3 are installed with a temperature regulator to store hot, cold and normal water, multiple solenoid valves 5 attached with containers 1, 2, 3 to dispense water, a platform 7 crafted with multiple slots 8 placed beneath valves 5 for placing a utensil 9, an A.I. based imaging module 10 mounted over platform 7 that determines approximate age of user, size of utensil 9 and impurities within water, and sends data to microcontroller that creates profile and assigns nutrients required for different users, compact purification unit 12 for performing second level water purification and wireless connectivity module that interlinks microcontroller with a nutrient regulating unit that regulates quantity of nutrients within the water based upon user profiles.

No. of Pages : 17 No. of Claims : 10

(12) PATENT APPLICATION PUBLICATION
(21) Application No.202111007972 A
(19) INDIA
(22) Date of filing of Application :25/02/2021
(43) Publication Date : 05/03/2021

(54) Title of the invention : SYSTEM AND METHOD OF FLOOD MANAGEMENT

(51) International classification	:H04L0029080000, B66B0005020000, G06Q0050060000, G06Q0050000000, G06Q0050100000	(71)**Name of Applicant :** **1)GRAPHIC ERA (DEEMED TO BE) UNIVERSITY** Address of Applicant :566/6, Bell Road, Clement Town, Dehradun 248002, Uttarakhand, India Uttarakhand India
(31) Priority Document No	:NA	(72)**Name of Inventor :**
(32) Priority Date	:NA	**1)HIMANSHU RAI GOYAL**
(33) Name of priority country	:NA	**2)KAMAL KUMAR GHANSHALA**
(86) International Application No	:NA	**3)SACHIN SHARMA**
Filing Date	:NA	
(87) International Publication No	: NA	
(61) Patent of Addition to Application Number	:NA	
Filing Date	:NA	
(62) Divisional to Application Number	:NA	
Filing Date	:NA	

(57) Abstract :
The invention discloses a system 100 for managing flood risk, post flood management, and performing recommendation-based rescue operation, said system 100 comprising: a plurality of smart IOT devices 101; a communication module 102; a Flash Flood Management Model (FDMM) 103; an Artificial Neural Network (ANN) module 104; a Profile Collector Central Agent (PCCA) 105; a Profile Collector Local Agent (PCLA) 106; a Recommendation Based Rescue Operation (RBRO) Model 107; a processor 108; and a memory 109 communicatively coupled to the processor 108. The memory 109 stores processor instructions, which, on execution, causes the processor 108 to manage flood risk, post flood management, and perform recommendation-based rescue operation. The plurality of smart IOT devices 101 comprises at least one of mobile phones, sensors related to water flow and rainfall rate, smart watches, devices with social media connected, or the like.

No. of Pages : 45 No. of Claims : 8

(12) PATENT APPLICATION PUBLICATION
(21) Application No.202111008015 A
(19) INDIA
(22) Date of filing of Application :25/02/2021
(43) Publication Date : 05/03/2021

(54) Title of the invention : LACTOSE FREE FORMULATION OF EMPAGLIFLOZIN USING DIRECT COMPRESSION PROCESS

(51) International classification	:A61K0009200000, A61K0031704800, A61K0009160000, H04R0029000000, A61K0036000000
(31) Priority Document No	:NA
(32) Priority Date	:NA
(33) Name of priority country	:NA
(86) International Application No	:NA
Filing Date	:NA
(87) International Publication No	: NA
(61) Patent of Addition to Application Number	:NA
Filing Date	:NA
(62) Divisional to Application Number	:NA
Filing Date	:NA

(71)**Name of Applicant :**
1)Shailendra Mandge
Address of Applicant :Pacific Academy of Higher Education and Research University (PAHER), Pacific Hills, Airport Road, Debari, Udaipur-313003, Rajasthan Rajasthan India
2)Dr. Jayesh Dwivedi
(72)**Name of Inventor :**
1)Shailendra Mandge

(57) Abstract :
A formulation of Empagliflozin prepared by a lactose-free co-processed pharmaceutical excipient using direct compression process, wherein the process comprising the steps of: mixing 101 the Empagliflozin 10 mg with co-processed excipient in 1:1 ratio using ASTM #30; remixing 102 the above step 1 mixture with equivalent part of co-processed excipient using ASTM#30; repeating 103 the process until 40% co-processed excipient of the whole batch mixed uniformly; mixing 104 the step 3 mixture with the remaining quantity of co-processed excipient; blending 105 the step 4 mixture with croscarmellose sodium and finally lubricated with ASTM#40 passed magnesium stearate; and compressing 106 the tablets using step 5 lubricated blend using suitable punches.

No. of Pages : 16 No. of Claims : 6

(12) PATENT APPLICATION PUBLICATION
(21) Application No.202111008025 A
(19) INDIA
(22) Date of filing of Application :25/02/2021
(43) Publication Date : 05/03/2021

(54) Title of the invention : SYSTEM AND METHODS FOR ACCIDENT PREVENTION DURING USAGE OF ENERGY-EFFICIENT AGRICULTURAL HARVESTING MACHINE THROUGH RFID

(51) International classification	:H04N0007180000, G06K0009460000, G06K0009780000, G01N0021850000, G06F0003010000
(31) Priority Document No	:NA
(32) Priority Date	:NA
(33) Name of priority country	:NA
(86) International Application No	:NA
Filing Date	:NA
(87) International Publication No	: NA
(61) Patent of Addition to Application Number	:NA
Filing Date	:NA
(62) Divisional to Application Number	:NA
Filing Date	:NA

(71)**Name of Applicant :**
1)ABES ENGINEERING COLLEGE Ghaziabad
Address of Applicant :€ Campus-1,19th KM stone, NH-24, Ghaziabad, U.P., INDIA -201009 Uttar Pradesh India
(72)**Name of Inventor :**
1)Vivek Kumar Verma
2)Dr. Hemant Ahuja
3)Dr. Vinod Kumar
4)Mahendra Gupta

(57) Abstract :
The present invention provides energy-efficient agricultural harvesting machine and method for controlling thereof, the method comprising: confirming, the user is an authorized user, based on the matching of a received authorization code with a pre-stored authorization code; activating, a control unit to switch ON a motor; capturing, one or more images of a received agricultural product, through an optical sensor; analyzing, the captured one or more images to identify the presence of any human body part; shutting down, the motor, if any human body part is recognized.

No. of Pages : 27 No. of Claims : 10

(12) PATENT APPLICATION PUBLICATION
(21) Application No.202111008151 A
(19) INDIA
(22) Date of filing of Application :26/02/2021
(43) Publication Date : 05/03/2021

(54) Title of the invention : ETHYL CLLULOSE COATED MICROCAPSULES OF NICARDIPINE HYDROCHLORIDE AND METHOD THEREOF

(51) International classification	:A61K0047260000, C08B0037160000, A61K0047020000, A61K0047100000, A61K0047690000	(71)**Name of Applicant :** **1)Mr. Rajeev Satyarthy** Address of Applicant :124, MCD Staff Qtrs Nimri Colony, Ashok Vihar, Delhi, India-110052 Delhi India **2)Dr. Abhishek Suman** **3)Ishwar Chandra Giri**
(31) Priority Document No	:NA	
(32) Priority Date	:NA	
(33) Name of priority country	:NA	
(86) International Application No	:NA	
Filing Date	:NA	
(87) International Publication No	: NA	
(61) Patent of Addition to Application Number	:NA	
Filing Date	:NA	
(62) Divisional to Application Number	:NA	
Filing Date	:NA	

(72)**Name of Inventor :**
1)Mr. Rajeev Satyarthy
2)Dr. Abhishek Suman
3)Ishwar Chandra Giri

(57) Abstract :
The present invention provides microencapsules and method of synthesizing it. The microcapsule comprising a polymer shell and a core made of an encapsulated substance wherein, the drug : polymer ratio is 4 :1, wherein the drug is Nicardipine Hydrochloride and polymer is ethyl cellulose. A microcapsule has percentage of drug release is 98.8%. The method for the production of microcapsules as claimed in claim 1, said method comprising the steps of: dissolving Ethyl cellulose in 50 ml of toluene to form homogeneous solution, adding 1.6 g of Nicardipine Hydrochloride as core material to the polymer solution and dispersed thoroughly with the aid of a mechanical stirrer for 10 minutes, adding of 30 ml of petroleum ether slowly over a period of 20 minutes while stirring, chilling for 20 minutes with stirring to rigidise the coating of the microcapsules, encapsulated product was then collected by filtration and air dried to obtain microcapsule.

No. of Pages : 28 No. of Claims : 6

(12) PATENT APPLICATION PUBLICATION
(21) Application No.202111008159 A
(19) INDIA
(22) Date of filing of Application :26/02/2021
(43) Publication Date : 05/03/2021

(54) Title of the invention : PROGRESSION OF WOODEN BOAT

(51) International classification	:A23L0005100000, B63B0001120000, B63B0003700000, B63B0005100000, G07G0001000000	(71)**Name of Applicant :** **1)DR. V.P CHOVATIA.** Address of Applicant :Chamber No.-557, Dwarka Court Complex, Sector-10, Dwarka, New Delhi(India)-110075 Delhi India
(31) Priority Document No	:NA	**2)DR. TANK KETAN VAlLABHDAS.**
(32) Priority Date	:NA	(72)**Name of Inventor :**
(33) Name of priority country	:NA	**1)DR. TANK KETAN VAlLABHDAS.**
(86) International Application No	:NA	**2)DR. BAJANIYA VIRAL KUMAR CHHAGANLAL.**
Filing Date	:NA	
(87) International Publication No	: NA	
(61) Patent of Addition to Application Number	:NA	
Filing Date	:NA	
(62) Divisional to Application Number	:NA	
Filing Date	:NA	

(57) Abstract :
The present invention relates to a novel progression of wooden boat construction. All the steps of wooden constructions like Laying of keel, backbone assembly, planking, decking, engine installation and wooden trawler is not available during whole year.Boat construction is going on in coastal areas but specific time and specific activity of boat construction is may not available throughout the year. So, if anyone want to, know about these steps, they have to spend a lot of time to learn the steps. But in this invention, anyone can see these stepsall-round the year with scale to scale precision and clear, vision. This invention is novel and will be useful for those who want knowledge about fishing boat construction.

No. of Pages : 15 No. of Claims : 8

(12) PATENT APPLICATION PUBLICATION
(19) INDIA
(22) Date of filing of Application :26/02/2021
(21) Application No.202111008183 A
(43) Publication Date : 05/03/2021

(54) Title of the invention : SYSTEM AND METHOD TO CONTROL POWER ALLOCATION TO LOADS BASED PRIORITY

(51) International classification	:H02J0003140000, B25J0009160000, G01G0019020000, B60P0001040000, E02F0009220000
(31) Priority Document No	:NA
(32) Priority Date	:NA
(33) Name of priority country	:NA
(86) International Application No	:NA
Filing Date	:NA
(87) International Publication No	: NA
(61) Patent of Addition to Application Number	:NA
Filing Date	:NA
(62) Divisional to Application Number	:NA
Filing Date	:NA

(71)**Name of Applicant :**
1)ABES Engineering College, Ghaziabad
Address of Applicant :Campus-1, 19th Km Stone, NH-24, Ghaziabad, Uttar Pradesh 201009 Uttar Pradesh India
(72)**Name of Inventor :**
1)Dr. Hemant Ahuja
2)Ms. Geetika Aswani
3)Mr. Gulshan Dubey
4)Mr.Santosh Chaurasia
5)Mr. Vivek Verma
6)Mr. Himanshu Prajapati

(57) Abstract :
The present invention relates to a system and method for energy management to control the supply of electricity to one or more loads based on priority order. The method comprises receiving, through an input means, load information for each of the one or more loads, from a user; determining, through a load sensor, a total load of a power source arranged to provide electrical energy to each of the one or more loads; comparing, the determined total load and a threshold amount of power supply, to determine an overload condition or an under-load condition; analyzing, the priority of each of the one or more loads and control the supply of electricity to each of the one or more loads based on the priority; and transmitting, a notification to one or more computing devices, via a network interface.

No. of Pages : 28 No. of Claims : 10

(12) PATENT APPLICATION PUBLICATION
(21) Application No.202111008211 A
(19) INDIA
(22) Date of filing of Application :26/02/2021
(43) Publication Date : 05/03/2021

(54) Title of the invention : WEARABLE DEVICES USING LOW POWER WIDE AREA NETWORK (LPWAN) FOR SELF HEALTH MONITORING

(51) International classification	:H04W0072040000, A61B0005000000, H04L0001000000, H04W0084180000, H04L0001080000
(31) Priority Document No	:NA
(32) Priority Date	:NA
(33) Name of priority country	:NA
(86) International Application No	:NA
Filing Date	:NA
(87) International Publication No	: NA
(61) Patent of Addition to Application Number	:NA
Filing Date	:NA
(62) Divisional to Application Number	:NA
Filing Date	:NA

(71)**Name of Applicant :**
1)Dr.Kedri Janardhana
Address of Applicant :Assistant Professor (Senior Grade), Department of Electrical Engineering, Faculty of Engineering, Dayalbagh Educational Institute (Deemed to be University), Dayalbagh, Agra, Uttar Pradesh, 282005, India Uttar Pradesh India
2)Dr.V. Elizabeth Jesi
3)M.Vijayaragavan
4)Dr. SHOIEB AHAMED
5)Mr.Rajendirakumar
6)Mr.P.Rajasekar
7)Ms. K. REKHA
8)Dr.A.Nirmal Kumar
9)Dr. M. Rajalakshmi
10)Dr.J.JOSPIN JEYA
(72)**Name of Inventor :**
1)Dr.Kedri Janardhana
2)Dr.V. Elizabeth Jesi
3)M.Vijayaragavan
4)Dr. SHOIEB AHAMED
5)Mr.Rajendirakumar
6)Mr.P.Rajasekar
7)Ms. K. REKHA
8)Dr.A.Nirmal Kumar
9)Dr. M. Rajalakshmi
10)Dr.J.JOSPIN JEYA

(57) Abstract :
Wireless Body Area Networks (WBANs) are regarded as desirable alternatives for all medical surveillance (WMAs) and can be used by new communications systems to provide effective means of real-time tracking of patients' health conditions. The aim of this innovation is therefore more on sophisticated wireless communication systems which can be discussed in WBAN solutions for HCM of the next decade. Besides, this analysis dealt with the crucial issues facing the current HCM WBANs. For example, the limitations of the legacy short, medium and cellular technology typically used in WBAN systems are the reason for broader health data communication restrictions, concern for the reliability of health data and energy efficiency. Since the WBAN sensing instruments typically have a small battery power configuration, they are easily exhausted during longer operations. Technically, this is exacerbated by the use of energy during data communications in legacy communications systems such as ZigBee, Bluetooth and 6LoWPAN, etc. This regrettable situation provides an opportunity for the use, in this study, of the appropriate communication systems for improving WBAN productivity in HCM. This invention based on its power transmission, data transmission rate, data reliability in the context of efficient data transmission, communications coverage and latency to achieve this, in emerging communication systems, such as the wide-area network low-power (LPWANs).

No. of Pages : 23 No. of Claims : 4

(12) PATENT APPLICATION PUBLICATION
(21) Application No.202111008222 A
(19) INDIA
(22) Date of filing of Application :26/02/2021
(43) Publication Date : 05/03/2021

(54) Title of the invention : SYSTEMS AND METHOD FOR TIME OPTIMIZATION OF AN ELEVATOR

(51) International classification	:B66B0003020000, B66B0005000000, B66B0001340000, B66B0003000000, B66B0001300000	(71)**Name of Applicant :** **1)ABES Engineering College, Ghaziabad** Address of Applicant :ABES Engineering College, Campus-1, street 19th Km Stone, NH-24, Ghaziabad, Uttar Pradesh 201009 Uttar Pradesh India
(31) Priority Document No	:NA	(72)**Name of Inventor :**
(32) Priority Date	:NA	**1)Ms. Geetika Aswani**
(33) Name of priority country	:NA	**2)Mr. Rahul Virmani**
(86) International Application No	:NA	**3)Mr .Santosh Chaurasia**
Filing Date	:NA	**4)Mr. Tarang Kumar Sahu**
(87) International Publication No	: NA	
(61) Patent of Addition to Application Number	:NA	
Filing Date	:NA	
(62) Divisional to Application Number	:NA	
Filing Date	:NA	

(57) Abstract :
The present invention provides a system and method for monitoring and controlling the movement of the elevator car. The method comprising: receiving, through an input means, an input signal which comprises direction information, a stop floor information or a combination thereof; determining, a speed of an elevator car, through a speed sensor; detecting, a current position of the elevator car, via a position detector; determining, an arrival status of the elevator car, by an arrival sensor; evaluating, a moving direction of the elevator car, through direction determining sensor; analyzing, the determined speed, the detected current position, determined arrival status and the evaluated moving direction; controlling, a floor indicator to display of current floor position and a direction indicator to display the direction in which the elevator car is moving; and controlling, a motor to drive the elevator car in an upward direction or a downward direction, based on the received direction information and stop floor information.

No. of Pages : 28 No. of Claims : 10

(12) PATENT APPLICATION PUBLICATION
(21) Application No.202111008300 A
(19) INDIA
(22) Date of filing of Application :26/02/2021
(43) Publication Date : 05/03/2021

(54) Title of the invention : SYSTEM FOR ASSISTANCE AND SAFETY OF PARKINSON PATIENT

(51) International classification	:G05D0001000000, B62D0015020000, B60Q0001520000, A61B0005040200, E05F0015720000
(31) Priority Document No	:NA
(32) Priority Date	:NA
(33) Name of priority country	:NA
(86) International Application No	:NA
Filing Date	:NA
(87) International Publication No	: NA
(61) Patent of Addition to Application Number	:NA
Filing Date	:NA
(62) Divisional to Application Number	:NA
Filing Date	:NA

(71)**Name of Applicant :**
1)Rupali Bhardwaj
Address of Applicant :Assistant Professor, Department of Computer Science & Engineering, Thapar Institute of Engineering and Technology. Patiala, Punjab, India. Pin Code-147004. Punjab India
(72)**Name of Inventor :**
1)Rupali Bhardwaj

(57) Abstract :
A system (100) for assisting and rescuing a Parkinson patient in case of emergency is disclosed. The system (100) comprises an autonomous assistant vehicle (102), a handling device (104) and a plurality of e-nose sensors (106) capable of sensing olfactory data. The plurality of e-nose sensors are positioned inside a closed area (108) such as home where the Parkinson patient is residing, the plurality of e-nose sensors (106) being in wireless communication with the autonomous assistance vehicle (102). The plurality of e-nose sensors (106) are capable of detecting an emergency situation such as gas leakage, short circuit or fire smoke in the closed area and communicate the emergency situation to the autonomous assistance vehicle (102). The autonomous assistance vehicle (102) is configured to alert the Parkinson patient and finding the shortest path available for rescuing the Parkinson patient.

No. of Pages : 22 No. of Claims : 10

(12) PATENT APPLICATION PUBLICATION
(21) Application No.202111008402 A
(19) INDIA
(22) Date of filing of Application :28/02/2021
(43) Publication Date : 05/03/2021

(54) Title of the invention : SYSTEMS AND METHODS FOR INTEGRATED DIGITISED MANAGEMENT OF EDUCATIONAL INSTITUTIONS

(51) International classification	:G06Q0050200000, H04L0012580000, F02C0003040000, C10K0001020000, B01L0007000000	(71)**Name of Applicant :** **1)A & S Software Consultancy Private Limited** Address of Applicant :G-14, First Floor, South Extension-1, Main Market, New Delhi 110049 Delhi India (72)**Name of Inventor :** **1)Dr Sangeeta Jain** **2)Arun Jain**
(31) Priority Document No	:NA	
(32) Priority Date	:NA	
(33) Name of priority country	:NA	
(86) International Application No	:NA	
Filing Date	:NA	
(87) International Publication No	: NA	
(61) Patent of Addition to Application Number	:NA	
Filing Date	:NA	
(62) Divisional to Application Number	:NA	
Filing Date	:NA	

(57) Abstract :
A method for integrated management of educational institutions includes the steps of, facilitating a multiple admissions, via an admission module, of a multiple students for a multiple institutions; managing a multiple academic activities, via an academic module, of the multiple students for the multiple institutions; and, providing an admin and finance module for managing a multiple admin and financial activities of a multiple employees and the multiple students, belonging to the multiple institutions.

No. of Pages : 22 No. of Claims : 4

(12) PATENT APPLICATION PUBLICATION
(21) Application No.202111008414 A
(19) INDIA
(22) Date of filing of Application :01/03/2021
(43) Publication Date : 05/03/2021

(54) Title of the invention : WEB APPLICATION BASED INTELLIGENT & SECURED IMAGE RETRIEVAL MODEL

(51) International classification	:G06F0016583000, G06K0009460000, H04L0009080000, G06F0016532000, G06K0009620000	(71)**Name of Applicant :** **1)Prof. POONAM BANSAL** Address of Applicant :Maharaja Surajmal Institute of Technology, C-4, Janak Puri, New Delhi 110058 Delhi India **2)Ms. SHEFALI DHINGRA**
(31) Priority Document No	:NA	(72)**Name of Inventor :**
(32) Priority Date	:NA	**1)Prof. POONAM BANSAL**
(33) Name of priority country	:NA	**2)Ms. SHEFALI DHINGRA**
(86) International Application No	:NA	**3)Prof. Meena Tushir**
Filing Date	:NA	**4)Ms. Sonia Goel**
(87) International Publication No	: NA	**5)Ms. Jyoti Khurana**
(61) Patent of Addition to Application Number	:NA	**6)Ms. Pooja Kherwa**
Filing Date	:NA	
(62) Divisional to Application Number	:NA	
Filing Date	:NA	

(57) Abstract :
A content-based image retrieval system (100), comprising a service provider device (104), wherein the service provider device (104) comprises a server database (114) to store clusters, such that each of the clusters comprises encrypted images having similar set of features; a user computing device (106) configured to receive a query image along with an encryption key from a user; an image retrieval platform (108) configured to: receive the query image along with the encryption key; extract features from the received query image; predict a cluster from the stored clusters for the received query image based on the extracted features; calculate a similarity between the extracted features of the received query image and the similar set of features of the corresponding predicted cluster; assign a rank to relevant encrypted images of the corresponding predicted cluster; and decrypt the relevant encrypted images by using the received encryption key.

No. of Pages : 29 No. of Claims : 10

(12) PATENT APPLICATION PUBLICATION
(21) Application No.202111008432 A
(19) INDIA
(22) Date of filing of Application :01/03/2021
(43) Publication Date : 05/03/2021

(54) Title of the invention : A FRAMEWORK FOR TESTING THE STAKEHOLDERS PERCEPTION OF ETHICAL PRACTICES BY FIRMS

(51) International classification	:G06Q0010060000, A61Q0019080000, C12N0015860000, A61Q0019000000, A61K0008970000	(71)**Name of Applicant :** **1)Sharda University** Address of Applicant :Plot No. 32, 34, Knowledge Park III, Greater Noida, Uttar Pradesh 201310. Uttar Pradesh India (72)**Name of Inventor :** **1)Dr. Animesh Singh** **2)Ms. Saumya Kumar**
(31) Priority Document No	:NA	
(32) Priority Date	:NA	
(33) Name of priority country	:NA	
(86) International Application No	:NA	
Filing Date	:NA	
(87) International Publication No	: NA	
(61) Patent of Addition to Application Number	:NA	
Filing Date	:NA	
(62) Divisional to Application Number	:NA	
Filing Date	:NA	

(57) Abstract :
A framework for testing the stakeholders perception of ethical practices by firms based on four important constructsutility€□,rights€□,fairness€□ andethics of care€□. These constructs are considered as the four key pillars of ethics and they are used to weigh the ethical correctness of business decisions. The framework is a conceptual model that attempts to know the perception the stakeholders about the ethical practices carried out by the firm. Further, the framework uses quantitative constructs to gather the perception of the stakeholders on the ethical practices by the organisation. The framework can be used for any business organization in any industry.

No. of Pages : 13 No. of Claims : 5

(12) PATENT APPLICATION PUBLICATION
(19) INDIA
(22) Date of filing of Application :01/03/2021
(21) Application No.202111008502 A
(43) Publication Date : 05/03/2021

(54) Title of the invention : INDUCTION HEATING DEVICE

(51) International classification	:H05B0006100000, F21V0021040000, F24D0009000000, G01V0003280000, F24H0001100000
(31) Priority Document No	:NA
(32) Priority Date	:NA
(33) Name of priority country	:NA
(86) International Application No	:NA
Filing Date	:NA
(87) International Publication No	: NA
(61) Patent of Addition to Application Number	:NA
Filing Date	:NA
(62) Divisional to Application Number	:NA
Filing Date	:NA

(71)**Name of Applicant :**
1)Dr. VISHAD TRIPATHI
Address of Applicant :9/81, SECTOR-9, INDIRA NAGAR, LUCKNOW (U.P.). PIN-226016 INDIA Uttar Pradesh India
(72)**Name of Inventor :**
1)Dr. VISHAD TRIPATHI

(57) Abstract :
An induction heating device (101, 301) for heating a fluid (10) to heat a room or a space is provided with an FMPV coil (5) or peltier cells (not shown) positioned at a lower end (104, 304) of the metallic casing (102, 302) to heat the metallic casing (102, 302). The metallic casing (102, 302) in turn heats the fluid (10) contained in the metallic casing (102, 302) to heat the surroundings of the heating device (101, 301).

No. of Pages : 21 No. of Claims : 9

(12) PATENT APPLICATION PUBLICATION
(21) Application No.202111008557 A
(19) INDIA
(22) Date of filing of Application :01/03/2021
(43) Publication Date : 05/03/2021

(54) Title of the invention : SYSTEM AND METHOD FOR ESTIMATING RELIABILITY OF SOFTWARE DEVELOPED UNDER LATEST SOFTWARE DEVELOPMENT LIFE CYCLE

(51) International classification	:G06Q0010060000, G06F0016250000, G06F0008100000, G06F0008770000, G06F0011000000
(31) Priority Document No	:NA
(32) Priority Date	:NA
(33) Name of priority country	:NA
(86) International Application No	:NA
Filing Date	:NA
(87) International Publication No	: NA
(61) Patent of Addition to Application Number	:NA
Filing Date	:NA
(62) Divisional to Application Number	:NA
Filing Date	:NA

(71)**Name of Applicant :**
1)SANGEETA
Address of Applicant :Assistant Professor, Maharaja Surajmal Institute of Technology, Janakpuri, New Delhi - 110058, India. Delhi India
2)SITENDER
(72)**Name of Inventor :**
1)SANGEETA
2)SITENDER

(57) Abstract :
The present disclosure relates to a computer implemented system (100) for estimating reliability of software developed under latest software development life cycle (SDLC), the system includes an information input unit (102) configured to obtain input data from a user, the input data comprises performance parameters required in the development of enterprise software, the development of enterprise software comprises a plurality of phases. A processor (104) coupled to the information input unit to receive, from the information input unit, the performance parameters of the input data from the user; and provide a reliability model that comprises a factor, wherein the factor incorporates a combination of varying requirements in each of the plurality of phases, the factor is implemented to estimate the reliability in each of the plurality of phases.

No. of Pages : 23 No. of Claims : 8

(12) PATENT APPLICATION PUBLICATION
(21) Application No.202111008572 A
(19) INDIA
(22) Date of filing of Application :01/03/2021
(43) Publication Date : 05/03/2021

(54) Title of the invention : A SYSTEM OF A MODULAR AUTOMATIC CAR PARKING SYSTEM FOR A CITY MARKETPLACE

(51) International classification	:E04H0006220000, G07B0015020000, E04H0006420000, A61K0048000000, E04H0006100000
(31) Priority Document No	:NA
(32) Priority Date	:NA
(33) Name of priority country	:NA
(86) International Application No	:NA
Filing Date	:NA
(87) International Publication No	: NA
(61) Patent of Addition to Application Number	:NA
Filing Date	:NA
(62) Divisional to Application Number	:NA
Filing Date	:NA

(71)**Name of Applicant :**
1)Dr Jatinder Madan
Address of Applicant :Professor, Mechanical Engineering, CCET (Degree Wing), Sector 26, Chandigarh Chandigarh India
2)Dr. Sunil Kumar Singh
3)Dr. D S Saini
4)Dr. Rajesh Kumar
(72)**Name of Inventor :**
1)Dr Jatinder Madan
2)Dr. Sunil Kumar Singh
3)Dr. D S Saini
4)Dr. Rajesh Kumar

(57) Abstract :
Discloses a system of a modular automatic car parking system for a city marketplace comprises Number of levels (101), Modular length (102), Total parking units (103), Permissible movements (104), and Submitting and retrieving the car (106); wherein said parking system is multilevel having three levels, notated as I, II and III; wherein level I is at the ground level, whereas, level III is at the top level and multiple levels are added optionally. Several cities have developed parking systems at a number of places to cater to the problem, which include parking systems with concrete structures or automated parking systems. Plenty of car parking systems exist however they have major limitations due to several reasons.

No. of Pages : 18 No. of Claims : 10

(12) PATENT APPLICATION PUBLICATION
(21) Application No.202111008573 A
(19) INDIA
(22) Date of filing of Application :01/03/2021
(43) Publication Date : 05/03/2021

(54) Title of the invention : SYSTEM AND METHOD FOR SELECTIVE OVERRIDING OF NOTIFICATION OF A CALL AND CALL SWITCHING

(51) International classification	:H04M0019040000, H04M0001725000, H04M0001660000, H04W0068000000, H04M0003420000	(71)**Name of Applicant :** **1)AYUSHI GUPTA** Address of Applicant :E-138 KALKA JI, NEW DELHI, 110019, INDIA Delhi India (72)**Name of Inventor :** **1)AYUSHI GUPTA**
(31) Priority Document No	:NA	
(32) Priority Date	:NA	
(33) Name of priority country	:NA	
(86) International Application No	:NA	
Filing Date	:NA	
(87) International Publication No	: NA	
(61) Patent of Addition to Application Number	:NA	
Filing Date	:NA	
(62) Divisional to Application Number	:NA	
Filing Date	:NA	

(57) Abstract :
A system for selective overriding of notification of a call and call switching is disclosed. The system includes a processing subsystem which includes a call reason receiving module to receive a first reason or a second reason of a telephone call originated over any wireless communication network from a caller; call switching module to determine signal strength of a cellular network available in a predetermined geographical location for initiation of the telephone call from a caller€™s end, switch to web-based call from the caller€™s end upon determining a diminishing signal strength of the cellular network; a call notification modification module to override an existing notification mode of a receiver€™s communication device for the telephone call or the web-based call with a predefined alert signal, to modify existing notification setting of the receiver€™s communication device to alert him of incoming of important call.

No. of Pages : 25 No. of Claims : 9

(12) PATENT APPLICATION PUBLICATION
(21) Application No.202111008644 A
(19) INDIA
(22) Date of filing of Application :02/03/2021
(43) Publication Date : 05/03/2021

(54) Title of the invention : ACCIDENT PREVENTIVE HEAVY INSTANT BRAKING SYSTEM FOR ALL TYPES OF LIGHT, MEDIUM AND HEAVY MOTOR VEHICLES , FORMULA 1 RACING CARS ETC

(51) International classification	:B60T0001140000, B60T0013580000, F03G0007080000, B66F0007080000, B60T0001100000	(71)**Name of Applicant :** **1)Amandeep Malhotra S/o Jagdish Chand** Address of Applicant :# B-33/262, New Janak Puri, Salem Tabri, Ludhiana, Punjab-141008, India. Punjab India (72)**Name of Inventor :** **1)Amandeep Malhotra S/o Jagdish Chand**
(31) Priority Document No	:NA	
(32) Priority Date	:NA	
(33) Name of priority country	:NA	
(86) International Application No	:NA	
Filing Date	:NA	
(87) International Publication No	: NA	
(61) Patent of Addition to Application Number	:NA	
Filing Date	:NA	
(62) Divisional to Application Number	:NA	
Filing Date	:NA	

(57) Abstract :
The present invention relates to an Accident Preventive Heavy Instant Braking System for Light, Medium and Heavy Motor vehicles and electric vehicles, Formula 1 Racing Cars Etc. which may include a Large Frame consisting of Mini Wheels/pads in the arranged way (3), Mini Wheels of special material/rubber or any other friction material (4). Figure Illustrates that at base of the motor vehicle when a rubber or any other friction material pads or any required materialled surface comprising of the number of teethes as like in tires, in opposite direction, further with the help of a lever or necessary parts as required the aforesaid surface may deploy into the down and locked position and to accomplish this the driver activates a switch or mechanical handle, which releases the up-lock, then Gravity pulls the braking system down and deploys it and with required air or hydraulic pressure and it will make contact with ground/road to make heavy friction, to stop the vehicle in a more balanced way and less time and distance.

No. of Pages : 22 No. of Claims : 5

(12) PATENT APPLICATION PUBLICATION
(21) Application No.202111008822 A
(19) INDIA
(22) Date of filing of Application :02/03/2021
(43) Publication Date : 05/03/2021

(54) Title of the invention : TO SCALE NETWORKS USING NETWORK OVERLAYS AND TO SECURE AGAINST MALICIOUS ATTACK WITH HIGH NETWORK INTEROPERABILITY IN NETWORK ARCHITECTURE

(51) International classification	:H04L0029120000, H04L0012180000, A61B0034300000, H04M0007000000, H03K0019080000
(31) Priority Document No	:NA
(32) Priority Date	:NA
(33) Name of priority country	:NA
(86) International Application No	:NA
Filing Date	:NA
(87) International Publication No	: NA
(61) Patent of Addition to Application Number	:NA
Filing Date	:NA
(62) Divisional to Application Number	:NA
Filing Date	:NA

(71)**Name of Applicant :**
1)Quantum University
Address of Applicant :22 Km Mile Stone , Mandawar ,Roorkee-D.Dun Highway (NH-73),Roorkee, Uttarakhand, India - 247167 Uttarakhand India
(72)**Name of Inventor :**
1)Dr Vivek Kumar , Vice Chancellor
2)Mr.Satendra Kumar,Associate Professor
3)Dr Aditi Sharma,Associate Professor

(57) Abstract :
In this invention advanced technologies are given in model to capturing a parcel being multicast from a first interacts endpoint in an organization, deciding first location planning data of the first interacts endpoint and a first host, wherein the main host made the bundle, producing a control convention message with the principal address planning data, and imparting the control convention message through a control plane in the organization. In more explicit model encapsulations, the conveying the control convention message incorporates sending the control convention message to an organization vault, where the principal address planning data is enlisted in the organization archive. In other more explicit model encapsulations, the imparting the control convention message incorporates pushing the control convention message to at least one first interacts endpoints. Further encapsulations incorporate decapsulating the bundle to decide an endpoint identifier of the principal have and an area of the first interacts endpoint.

No. of Pages : 9 No. of Claims : 5

(12) PATENT APPLICATION PUBLICATION
(21) Application No.202111008823 A
(19) INDIA
(22) Date of filing of Application :02/03/2021
(43) Publication Date : 05/03/2021

(54) Title of the invention : DYNAMIC POWER MANAGEMENT AND MOBILE PLATFORM POLICY ENHANCEMENT FOR USER-ACTIVITY BASED NETWORK ENVIRONMENT

(51) International classification	:A63F0003000000, H04M0003493000, G06F0003010000, H04N0021258000, G06F0009451000
(31) Priority Document No	:NA
(32) Priority Date	:NA
(33) Name of priority country	:NA
(86) International Application No	:NA
Filing Date	:NA
(87) International Publication No	: NA
(61) Patent of Addition to Application Number	:NA
Filing Date	:NA
(62) Divisional to Application Number	:NA
Filing Date	:NA

(71)**Name of Applicant :**
1)Quantum University
Address of Applicant :22 Km Mile Stone , Mandawar ,Roorkee-D.Dun Highway (NH-73),Roorkee, Uttarakhand, India - 247167 Uttarakhand India
(72)**Name of Inventor :**
1)Dr Vivek Kumar , Vice Chancellor
2)Mr.Satendra Kumar,Associate Professor
3)Mr Rishi Kumar Sharma ,Assistant Professor

(57) Abstract :
A strategy and device for client action based unique force the executives and strategy creation for mobile platforms stages are portrayed. In this the strategy incorporates the observing of at least one sensor estimations of a versatile stage device to accumulate sensor action information. When the sensor action information is assembled, the client state might be anticipated by the accumulated client action and a refreshed client state model. In one encapsulation, the client state model is refreshed by the sensor action information. In one exemplification, a switch happens from the current force the board strategy to another force the executive's strategy if the new client state varies from a current client state by a foreordained sum. In one encapsulation, at any rate one break boundary of a chose power the board strategy might be acclimated to agree with an anticipated client state. Different encapsulations are depicted and guaranteed. Encapsulations of apparatuses, articles, methods, and systems for voice correspondence segments inside a segment of a processing stage are for the most part portrayed thus. Different epitomes might be portrayed and guaranteed.

No. of Pages : 9 No. of Claims : 5

(12) PATENT APPLICATION PUBLICATION
(21) Application No.201921023156 A
(19) INDIA
(22) Date of filing of Application :11/12/2019
(43) Publication Date : 05/03/2021

(54) Title of the invention : A MULTI-JOINT REHABILITATION SYSTEM

(51) International classification	:A61H0001020000, F02B0075040000, B63G0008080000, B63G0008140000, A63B0021000000	(71)**Name of Applicant :** **1)ABHISHEK RAI** Address of Applicant :B-305, Building No. 44, Tilak Nagar, Chembur, Mumbai 400089, Maharashtra, India Maharashtra India **2)CHIRAG SHAH**
(31) Priority Document No	:NA	(72)**Name of Inventor :**
(32) Priority Date	:NA	**1)ABHISHEK RAI**
(33) Name of priority country	:NA	**2)CHIRAG SHAH**
(86) International Application No	:NA	
Filing Date	:NA	
(87) International Publication No	: NA	
(61) Patent of Addition to Application Number	:NA	
Filing Date	:NA	
(62) Divisional to Application Number	:NA	
Filing Date	:NA	

(57) Abstract :
In general, the present invention claims a portable multi-joint rehabilitation device that integrates upper limb and lower limb rehabilitation in a single confined space. The device includes a mechanical structured base, electronic components by which resistance is varied to keep the track of the resistance applied and the load undertaking capacity of the patients in order to assist the user / physiotherapist to plan out course of therapy from the data acquired from the device. The device includes multiple upper limb and lower limb joint rehabilitation attachments that are interchangeably coupled to the device according to the respective need of the patient thereby providing wide range of multi-mode motions in each of the joints. The multi-modes of the device provide incremental rehabilitation to the patients to complete his/her therapy along with feedbacks.

No. of Pages : 46 No. of Claims : 10

(12) PATENT APPLICATION PUBLICATION
(21) Application No.202021001359 A
(19) INDIA
(22) Date of filing of Application :13/01/2020
(43) Publication Date : 05/03/2021

(54) Title of the invention : METHOD FOR LEAF VEIN CLEARING AND FORMULATION THEREFOR

(51) International classification	:A41G0001000000, A41G0001020000, G09B0023380000, B01J0037030000, A01N0003000000	(71)**Name of Applicant :** **1)Saima Rashid Mir** Address of Applicant :Department of Botany, Prof. Ramkrishna More A.C.S. College, Akurdi Pune, Maharashtra, India Maharashtra India
(31) Priority Document No	:NA	(72)**Name of Inventor :**
(32) Priority Date	:NA	**1)Saima Rashid Mir**
(33) Name of priority country	:NA	**2)Girish Rajaram Pathade**
(86) International Application No	:NA	**3)Manohar Ganpat Chaskar**
Filing Date	:NA	**4)Murari Mohan Jana**
(87) International Publication No	: NA	**5)Bajirao Maruti Shinde**
(61) Patent of Addition to Application Number	:NA	
Filing Date	:NA	
(62) Divisional to Application Number	:NA	
Filing Date	:NA	

(57) Abstract :
Disclosed is a method for leaf vein clearing and formulation therefor. The method comprises selecting mature leaves soaking the selected leaves in warm water for 30 minutes and then in a clearing medium. The method further comprises immersing the leaves in clearing medium at temperature of 25 o C -35o C and maintaining the pH of the medium between 5.0 to 5.5. The leaves are kept in the clearing medium for at least a week for getting vein tissue transparent. Specifically, the method and formulation provide safer, cost effective and ecofriendly leaf clearing technique which would be useful for botanical studies and in artificial flower making. Further, the method renders leaf tissues transparent thus making it effective in botanical research and for educational applications.

No. of Pages : 15 No. of Claims : 8

(12) PATENT APPLICATION PUBLICATION
(19) INDIA
(22) Date of filing of Application :23/01/2020
(21) Application No.202021003050 A
(43) Publication Date : 05/03/2021

(54) Title of the invention : A TAMPER DETECTION DEVICE

(51) International classification	:H01M0010440000, G11B0017049000, G03G0015080000, A24D0003060000, B65D0006220000
(31) Priority Document No	:NA
(32) Priority Date	:NA
(33) Name of priority country	:NA
(86) International Application No	:NA
Filing Date	:NA
(87) International Publication No	: NA
(61) Patent of Addition to Application Number	:NA
Filing Date	:NA
(62) Divisional to Application Number	:NA
Filing Date	:NA

(71)**Name of Applicant :**
1)SEPIO PRODUCTS PRIVATE LIMITED
Address of Applicant :037, Akshay Ind. Premises Co-op.Society Ltd. Navghar, Vasi (E), Palghar-401210, Maharashtra, India Maharashtra India
(72)**Name of Inventor :**
1)NATHANI MURAD
2)GANDHI DARSHAN DHRUMAN
3)NORONHA PAUL ABNER
4)KAMAT DATTAPRASAD NARAYAN

(57) Abstract :
ABSTRACT A TAMPER DETECTION DEVICE The present disclosure relates to the field of security systems and discloses a tamper detection device. The device(100) comprises at least one transducer(106,110), a power supply unit(114), a logical 5 gate(112), a processing unit(104), and, a tamper tag(102). The transducer(106,110) generates a trigger signal upon detection of a tamper event. The logical gate(112) is operable in an open state or a closed state. The processing unit(104) generates a tamper detection signal for changing the state of the logical gate(112) upon receiving the 10 trigger signal or upon detecting loss of power supply from the power supply unit(114). The change in state of logical gate(112) causes a tamper flag value stored in the tamper tag(102) to change, thereby indicating a tampered status to a reader scanning the tamper tag(102). The device(100) detects a tamper event even if the device(100) is not damaged/broken during tampering.

No. of Pages : 22 No. of Claims : 16

(12) PATENT APPLICATION PUBLICATION
(21) Application No.202021007065 A
(19) INDIA
(22) Date of filing of Application :19/02/2020
(43) Publication Date : 05/03/2021

(54) Title of the invention : A COMPOSITE PROCESS FOR THE PRODUCTION OF ETHANOL.

(51) International classification	:C12P0007060000, C12N0013000000, A23L0027000000, B32B0027400000, B32B0027340000
(31) Priority Document No	:NA
(32) Priority Date	:NA
(33) Name of priority country	:NA
(86) International Application No	:NA
Filing Date	:NA
(87) International Publication No	: NA
(61) Patent of Addition to Application Number	:NA
Filing Date	:NA
(62) Divisional to Application Number	:NA
Filing Date	:NA

(71)**Name of Applicant :**
1)PRAJ INDUSTRIES LIMITED
Address of Applicant :274-275, PRAJ Tower, Bhumkar Chowk-Hinjewadi Road, Hinjewadi Pune Maharashtra India
(72)**Name of Inventor :**
1)GHANSHAM BABURAO DEHSPANDE
2)KAILASH NARAYAN DHUMAL
3)AJAYKUMAR CHAGANLAL SONI
4)AJIT PRABHAKAR DESHMUKH

(57) Abstract :
The invention relates to a composite process for the production of ethanol using different types of sugary feed stocks for up to 360 days in a year. More particularly it relates to the use of bio-syrup obtained from sugarcane juice during the crushing season of the year and using it in off-season period for the production of ethanol.

No. of Pages : 25 No. of Claims : 15

(12) PATENT APPLICATION PUBLICATION
(21) Application No.202021047627 A
(19) INDIA
(22) Date of filing of Application :31/10/2020
(43) Publication Date : 05/03/2021

(54) Title of the invention : A MICRO-OXIDATION COATING DEVICE

(51) International classification	:H01M0002360000, C25F0007000000, C25D0007120000, C25D0017120000, B23H0003000000
(31) Priority Document No	:NA
(32) Priority Date	:NA
(33) Name of priority country	:NA
(86) International Application No	:NA
Filing Date	:NA
(87) International Publication No	: NA
(61) Patent of Addition to Application Number	:NA
Filing Date	:NA
(62) Divisional to Application Number	:NA
Filing Date	:NA

(71)**Name of Applicant :**
1)Symbiosis International (Deemed University)
Address of Applicant :Gram: Lavale, Taluka Mulshi, District Pune, Pin: 412115 Maharashtra India
(72)**Name of Inventor :**
1)Dr. Arunkumar Bongale
2)Dr. Satish Kumar
3)Mrs. Priya Jadhav
4)Mr. Narayan Sutar

(57) Abstract :
ABSTRACT A MICRO-OXIDATION COATING DEVICE The present invention describes a micro-oxidation device, wherein the micro-oxidation device may comprise a container (102), a movable electrode assembly, an electrolyte circulating means, a motor (208) and a hose (204). The moving electrode assembly may enable an electrode (116) to slide horizontally at an incremental distance over a surface of the workpiece for processing a coating layer thereon. Further, the electrolyte circulating means may comprise a sump (202) for storing the electrolyte solution received from the container (102) and may further be configured to store and recirculate the electrolyte solution back to the container (102). Further, the motor (208) and the hose (204) may be connected to the sump (202) of the electrolyte circulating means to circulate the electrolyte solution and maintain the level of electrolyte in the container (102), and the motor (208) may also be configured to move the electrode (116) of the moving electrode assembly. [To be published with figure 4]

No. of Pages : 24 No. of Claims : 7

(12) PATENT APPLICATION PUBLICATION
(19) INDIA
(22) Date of filing of Application :17/11/2020
(21) Application No.202021050021 A
(43) Publication Date : 05/03/2021

(54) Title of the invention : REAL-TIME TEMPERATURE MONITORING SYSTEM FOR CASTING PLANT

(51) International classification	:G01K0001020000, G01K0003000000, B22D0011160000, G08B0017060000, B61K0009040000
(31) Priority Document No	:NA
(32) Priority Date	:NA
(33) Name of priority country	:NA
(86) International Application No	:NA
Filing Date	:NA
(87) International Publication No	: NA
(61) Patent of Addition to Application Number	:NA
Filing Date	:NA
(62) Divisional to Application Number	:NA
Filing Date	:NA

(71)**Name of Applicant :**
1)Walchand College of Engineering
Address of Applicant :Vishrambag, Sangli, Dist. Sangli, Maharshtra€ 416 415, India Maharashtra India
2)Suhas Dhondiram Jagtap
3)Rahul Mohan Chanmanwar
4)Vijay Pandurang Mohale
5)Priydarshan Haridas Sawant
6)Pratap Ganpati Sonawane
7)Sachin Balasaheb Kadam
8)Yash Sanjay Patil
9)Prathamesh Arvind Rajeshirke
10)Atul Ajay Bhandare
11)Hrishikesh Ganesh Ponkshe
12)Omkar Prakash Kumbhar
13)Akshay Subhash Raut
(72)**Name of Inventor :**
1)Suhas Dhondiram Jagtap
2)Rahul Mohan Chanmanwar
3)Vijay Pandurang Mohale
4)Priydarshan Haridas Sawant
5)Pratap Ganpati Sonawane
6)Sachin Balasaheb Kadam
7)Yash Sanjay Patil
8)Prathamesh Arvind Rajeshirke
9)Atul Ajay Bhandare
10)Hrishikesh Ganesh Ponkshe
11)Omkar Prakash Kumbhar
12)Akshay Subhash Raut

(57) Abstract :
REAL-TIME TEMPERATURE MONITORING SYSTEM FOR CASTING PLANT Abstract Disclosed is a real-time temperature monitoring system (100) for establishing a wireless connectivity between a casting unit and monitoring team. The system comprises a data fetching unit (20), having a non-contact type temperature sensor to detect the temperature of a ladle containing molten metal for green sand molding and provides the temperature data to a temperature monitoring unit (30). The temperature monitoring unit (30) equipped with a receiver with signal processing circuit provides digital display of real time temperature conditions of the ladle and allows the operator to set a critical temperature range of operation. An alarm module electrically coupled to the receiving unit (30) triggers audio/visual alarms upon adverse temperature conditions so that appropriate control actions can be performed prior to the occurrence of breakout that would have otherwise may happen in the final stage. Figure 1

No. of Pages : 22 No. of Claims : 10

(12) PATENT APPLICATION PUBLICATION
(21) Application No.202021057267 A
(19) INDIA
(22) Date of filing of Application :30/12/2020
(43) Publication Date : 05/03/2021

(54) Title of the invention : PERSONAL AND HOME CARE COMPOSITIONS COMPRISING FATTY ACIDS FROM TUNG SEED OIL AS ANTIMICROBIAL PRESERVATIVE

(51) International classification	:A61K0036470000, A61Q0019000000, C11B0001100000, A61Q0019100000, A61Q0005020000
(31) Priority Document No	:NA
(32) Priority Date	:NA
(33) Name of priority country	:NA
(86) International Application No	:NA
Filing Date	:NA
(87) International Publication No	: NA
(61) Patent of Addition to Application Number	:NA
Filing Date	:NA
(62) Divisional to Application Number	:NA
Filing Date	:NA

(71)**Name of Applicant :**
1)GALAXY SURFACTANTS LTD.
Address of Applicant :C-49/2, TTC Industrial Area, Pawne, Navi Mumbai 400 703, Maharashtra, India Maharashtra India
(72)**Name of Inventor :**
1)KOSHTI, Nirmal
2)SAWANT, Bhagyesh Jagannath
3)BARI, Kishor Pundalik

(57) Abstract :
Disclosed herein are personal care and home care composition comprising the whole of fatty acids (unfractionated) of Tung seed oil (Aleurites fordii, Vernicia fordii (family:Euphorbiaceae) as an antimicrobial preservative. The invention further discloses process of preparation of such compositions having fatty acids of Tung seed oil which are produced by saponification of commercially available Tung oil from seeds of the nuts of Tung tree. The home and personal care compositions comprising˜whole€™ mixture of fatty acids derived from the corresponding triglyceride oil at concentration of 0.5 to 2 % w/w of the total composition help preserve the composition without any additional antimicrobial preservatives.

No. of Pages : 44 No. of Claims : 10

(12) PATENT APPLICATION PUBLICATION
(21) Application No.202023056408 A
(19) INDIA
(22) Date of filing of Application :24/12/2020
(43) Publication Date : 05/03/2021

(54) Title of the invention : NEW EXPANSION JOINT (MODIFIED COUPLING DEVICE)

(51) International classification	:F16L0051000000, F16L0027120000, F16L0051020000, F16L0051030000, F16L0059210000	(71)**Name of Applicant :** **1)SANJAY NARHARI RACHALWAR** Address of Applicant :Snehanjay, Plot No: 14, Ramkrishna Housing Society, Narendra Nagar, Nagpur, 440015 Maharashtra India
(31) Priority Document No	:NA	**2)MANDAR SANJAY RACHALWAR**
(32) Priority Date	:NA	(72)**Name of Inventor :**
(33) Name of priority country	:NA	**1)SANJAY NARHARI RACHALWAR**
(86) International Application No	:NA	**2)MANDAR SANJAY RACHALWAR**
Filing Date	:NA	
(87) International Publication No	: NA	
(61) Patent of Addition to Application Number	:	
Filed on	:01/01/1900	
(62) Divisional to Application Number	:NA	
Filing Date	:NA	

(57) Abstract :
Abstract New Expansion Joint (Modified coupling device) The present invention relates to a new Expansion joint (modified coupling device) for connecting pipelines for disposal of fly ash from thermal power stations. More particularly, the invention pertains to a tight, reliable expansion joint between pipes of conventional piping having widely differing coefficients of thermal expansion.

No. of Pages : 19 No. of Claims : 8

(12) PATENT APPLICATION PUBLICATION
(21) Application No.202121000946 A
(19) INDIA
(22) Date of filing of Application :08/01/2021
(43) Publication Date : 05/03/2021

(54) Title of the invention : SEAT ASSEMBLY FOR VEHICLE

(51) International classification	:B60N0002600000, B60N0002580000, H02J0007350000, H02S0030200000, A47C0031110000	(71)**Name of Applicant :** **1)SHETH, Yash Trambaklal** Address of Applicant :B/33 Vijay Nagar, Hospital Road, Bhuj - Kutch, Gujarat - 370001, India. Gujarat India **2)SHETH, Dimple Trambakbhai**
(31) Priority Document No	:NA	(72)**Name of Inventor :**
(32) Priority Date	:NA	**1)SHETH, Yash Trambaklal**
(33) Name of priority country	:NA	
(86) International Application No	:NA	
Filing Date	:NA	
(87) International Publication No	: NA	
(61) Patent of Addition to Application Number	:NA	
Filing Date	:NA	
(62) Divisional to Application Number	:NA	
Filing Date	:NA	

(57) Abstract :
The present disclosure relates to a seat assembly (200) including a seat body having a cavity (204). A seat cover (202) movably configured with the seat body to move between a close position in which the seat cover (202) covers the cavity (204) and an open position in which the seat cover (202) uncovers the cavity (204). The seat cover (202) includes at least one solar panel (302) movably configured with a lower surface of the seat cover (202) such that when the seat cover (202) is moved to the opened position the at least one solar panel (302) is exposed to sun light.

No. of Pages : 19 No. of Claims : 8

(12) PATENT APPLICATION PUBLICATION
(21) Application No.202121001744 A
(19) INDIA
(22) Date of filing of Application :14/01/2021
(43) Publication Date : 05/03/2021

(54) Title of the invention : THE OUTPUT INFLUENCER CRANKSHAFT

(51) International classification	:F02B0077080000, F03G0007100000, F02D0015020000, F02D0041240000, F02F0007000000	(71)**Name of Applicant :** **1)Vedant Kailas Chaudhari** Address of Applicant :6, Vidya Nagar, Dondaicha, Pin No. 425408, Tal. Shindkheda, Dist. Dhule Maharashtra India (72)**Name of Inventor :** **1)Vedant Kailas Chaudhari**
(31) Priority Document No	:NA	
(32) Priority Date	:NA	
(33) Name of priority country	:NA	
(86) International Application No	:NA	
Filing Date	:NA	
(87) International Publication No	: NA	
(61) Patent of Addition to Application Number	:NA	
Filing Date	:NA	
(62) Divisional to Application Number	:NA	
Filing Date	:NA	

(57) Abstract :
THE OUTPUT INFLUENCER CRANKSHAFT The present invention shows an improvement in crankshaft of internal combustion engine. In all types of engines has main problem that the power was created by ignition stroke which has not the same to output result because some parts in engine like piston, piston rod, body of engine and crankshaft uses certain amount of power and reduces much more power of ignition stroke hence it€™s efficiency reduces. The concept of invention has originated from this mechanical effect of crankshaft in engine. This effect creates a drawback for engine during transformation of mechanical energy from sub journal to main journal in crankshaft. The invention gives a particular solution for this drawback. After reduction of drawback the output is increased by 3 times and the fuel economy increased by 2.9 times also the full size of engine is reduces by 2.6 times which helps to fit it into less space area. The weight of engine also get reduced also the invention helps to control the pollution.

No. of Pages : 17 No. of Claims : 8

(12) PATENT APPLICATION PUBLICATION
(21) Application No.202121001821 A
(19) INDIA
(22) Date of filing of Application :14/01/2021
(43) Publication Date : 05/03/2021

(54) Title of the invention : PHOTO-CURABLE MULTIFUNCTION ACRYLATED/ METHACRYLATED EPOXY RESIN AND ONE-POT PREPARATION THEREOF

(51) International classification	:B29K0063000000, C08G0059160000, C09D0163100000, C09D0004060000, C08G0018100000	(71)**Name of Applicant :** **1)DESAI, Prashil D** Address of Applicant :C/16, Sainath Residency, Diwalipura, Vadodara - 390007, Gujarat, India. Gujarat India **2)JAGTAP, Ramanand N**
(31) Priority Document No	:NA	(72)**Name of Inventor :**
(32) Priority Date	:NA	**1)DESAI, Prashil D**
(33) Name of priority country	:NA	**2)JAGTAP, Ramanand N**
(86) International Application No	:NA	
Filing Date	:NA	
(87) International Publication No	: NA	
(61) Patent of Addition to Application Number	:NA	
Filing Date	:NA	
(62) Divisional to Application Number	:NA	
Filing Date	:NA	

(57) Abstract :
The present disclosure pertains to UV-curable epoxy acrylate/ methacrylate resins and process for their synthesis. Specifically, the present disclosure pertains to one pot synthesis process for the preparation of UV-curable multifunctional tetra-acrylated/ methacrylated epoxy resin, resulting intetra-acrylated/ methacrylated epoxy resin with improved crosslinking and curing speed.

No. of Pages : 26 No. of Claims : 16

(12) PATENT APPLICATION PUBLICATION
(21) Application No.202121003229 A
(19) INDIA
(22) Date of filing of Application :22/01/2021
(43) Publication Date : 05/03/2021

(54) Title of the invention : AUTHENTICATED PRESCRIPTION

(51) International classification	:G06Q0050220000, H04L0029060000, H04L0009320000, H04W0012060000, G16H0050200000
(31) Priority Document No	:NA
(32) Priority Date	:NA
(33) Name of priority country	:NA
(86) International Application No	:NA
Filing Date	:NA
(87) International Publication No	: NA
(61) Patent of Addition to Application Number	:NA
Filing Date	:NA
(62) Divisional to Application Number	:NA
Filing Date	:NA

(71)**Name of Applicant :**
1)BAID, Deepak Dalamchandji
Address of Applicant :B/701 The Nest Building, CTS No. 1004, Chitranjan Nagar, Rajawadi, Ghatkopar East, Mumbai 400077 Maharashtra India
2)BAID, Indu Deepak
(72)**Name of Inventor :**
1)BAID, Deepak Dalamchandji
2)BAID, Indu Deepak
3)BHANUSHALI, Jayesh Odhavji
4)RATHOD, Vivika Pushpak

(57) Abstract :
Disclosed is a method (200) and a system (102) for generating an authenticated prescription online. The method (200) comprises receiving a consent from a patient, wherein the consent is received upon authorization by the patient. The method (200) further comprises receiving a prescription from a doctor based on a diagnosis of the patient. Further, the method (200) comprises authenticating the prescription upon receiving unique login credentials of the doctor. Furthermore, the method (200) comprises inserting at least a digital signature of the doctor, a time stamp, and a unique digital code linked to the prescription, thereby generating an authenticated prescription. Finally, the method (200) comprises transmitting the authenticated prescription to the patient.

No. of Pages : 21 No. of Claims : 11

(12) PATENT APPLICATION PUBLICATION
(21) Application No.202121004193 A
(19) INDIA
(22) Date of filing of Application :31/01/2021
(43) Publication Date : 05/03/2021

(54) Title of the invention : DELAYED RELEASE COMPOSITION COMPRISING ENTERIC COATED DRUG LOADED IN PSYLLIUM HUSK MATRIX.

(51) International classification	:A61K0009280000, A61K0009500000, A61K0009160000, A61K0031120000, A61K0036680000
(31) Priority Document No	:NA
(32) Priority Date	:NA
(33) Name of priority country	:NA
(86) International Application No	:NA
Filing Date	:NA
(87) International Publication No	: NA
(61) Patent of Addition to Application Number	:NA
Filing Date	:NA
(62) Divisional to Application Number	:NA
Filing Date	:NA

(71)**Name of Applicant :**
1)VIKRAM ANDREW NAHARWAR
Address of Applicant :2, Hormuz Mansion, 72 B Desai road, Mumbai Maharashtra India Maharashtra India
2)TRESHA NAHARWAR
(72)**Name of Inventor :**
1)VIKRAM ANDREW NAHARWAR
2)TRESHA NAHARWAR

(57) Abstract :
The present invention relates to a delayed release composition comprising enteric coated drug loaded in psyllium husk matrix. The invention specifically provides curcumin loaded in psyllium husk matrix with 25 % ethanol solvent used for the preparation of composition which is coated with enteric polymer like hydroxypropyl methyl cellulose.

No. of Pages : 19 No. of Claims : 13

(12) PATENT APPLICATION PUBLICATION
(21) Application No.202121006780 A
(19) INDIA
(22) Date of filing of Application :18/02/2021
(43) Publication Date : 05/03/2021

(54) Title of the invention : IDENTIFICATION AND CLASSIFICATION OF INDIAN MEDICINAL LEAVES USING UAV WITH MACHINE LEARNING

(51) International classification	:G06N0020000000, G06K0009620000, G06K0009000000, G06N0003080000, B64C0039020000	(71)**Name of Applicant :**
(31) Priority Document No	:NA	**1)DR. K. RAJESWARI**
(32) Priority Date	:NA	Address of Applicant :PIMPRI CHINCHWAD COLLEGE OF ENGINEERING, SECTOR NO. 26,PRADHIKARAN, NIGDI, PUNE, MAHARASHTRA, INDIA, PIN CODE: 411044 Maharashtra India
(33) Name of priority country	:NA	**2)MUNOT DIVYA PRAVIN**
(86) International Application No	:NA	**3)BELHEKAR NIRANJAN PRAKASH**
Filing Date	:NA	**4)JAHAGIRDAR BHARGAVI VASUDEV**
(87) International Publication No	: NA	**5)PROF. CHAUDHARI ANAGHA NEELKANTH**
(61) Patent of Addition to Application Number	:NA	(72)**Name of Inventor :**
Filing Date	:NA	**1)DR. K. RAJESWARI**
(62) Divisional to Application Number	:NA	**2)MUNOT DIVYA PRAVIN**
Filing Date	:NA	**3)BELHEKAR NIRANJAN PRAKASH**
		4)JAHAGIRDAR BHARGAVI VASUDEV
		5)PROF. CHAUDHARI ANAGHA NEELKANTH

(57) Abstract :
Abstract Before the rise in modern medicine, India was known for its Ayurvedic medical system. Ayurvedic medicines were naturally found and prepared by Ayurvedic doctors or Vaidya as known in the native language. Back then, it was easier to identify Ayurvedic leaves and the remedies that could cure ailments were known by almost everyone. In the current scenario, due to the influence of modern medicines, it has become difficult for people to identify Ayurvedic leaves. Our system helps to remotely identify Indian medicinal leaves and provide the medicinal values of the leaves, the scientific name of the leave and the ailments that can be treated using the identified leaves. The proposed system uses a loT device connected to a USB camera, mounted on a drone (UAV). This system identifies the leaves and displays the output on the screen.

No. of Pages : 9 No. of Claims : 3

(12) PATENT APPLICATION PUBLICATION
(21) Application No.202121006841 A
(19) INDIA
(22) Date of filing of Application :18/02/2021
(43) Publication Date : 05/03/2021

(54) Title of the invention : A GASTRORETENTIVE OSMOTIC CAPSULE OF ZIDOVUDINE

(51) International classification	:A61K0009000000, A61K0031707200, B01D0061000000, A61K0009200000, A61K0031700000	(71)**Name of Applicant :** **1)VIVEK PRAKASHBHAI CHAVDA** Address of Applicant :L. M. College of Pharmacy, opp. Gujarat university, Navrangpura, Ahmedabad, Gujarat 380009 Gujarat India
(31) Priority Document No	:NA	(72)**Name of Inventor :**
(32) Priority Date	:NA	**1)VIVEK PRAKASHBHAI CHAVDA**
(33) Name of priority country	:NA	**2)DR. MOINUDDIN M. SONIWALA**
(86) International Application No	:NA	**3)DR. PRAFUL BHARADIA**
Filing Date	:NA	
(87) International Publication No	: NA	
(61) Patent of Addition to Application Number	:NA	
Filing Date	:NA	
(62) Divisional to Application Number	:NA	
Filing Date	:NA	

(57) Abstract :
ABSTRACT A GASTRORETENTIVE OSMOTIC CAPSULE OF ZIDOVUDINE The present invention is a gastroretentive osmotic capsule of Zidovudine. The present invention is in particular a gastroretentive osmotic capsule of Zidovudine comprising Zidovudine, atleast two osmogent, a floating agent and a diluent. The present invention is also process of preparation of the same.

No. of Pages : 25 No. of Claims : 10

(12) PATENT APPLICATION PUBLICATION
(21) Application No.202121007887 A
(19) INDIA
(22) Date of filing of Application :24/02/2021
(43) Publication Date : 05/03/2021

(54) Title of the invention : DEEP LEARNING BASED INTRUSION DETECTION IN REAL TIME SMART CITY ENVIRONMENT

(51) International classification	:G06K0009620000, H04L0029060000, G06F0021550000, G06N0003040000, G06N0003080000
(31) Priority Document No	:NA
(32) Priority Date	:NA
(33) Name of priority country	:NA
(86) International Application No	:NA
Filing Date	:NA
(87) International Publication No	: NA
(61) Patent of Addition to Application Number	:NA
Filing Date	:NA
(62) Divisional to Application Number	:NA
Filing Date	:NA

(71)**Name of Applicant :**
1)Deepika Chauhan,Shivajirao Kadam Institute of Technology and Management
Address of Applicant :Assistant Professor, Computer Science & Engineering, Shivajirao Kadam Institute of Technology and Management Indore Bypass Road Near Ralamandal, Indore Madhya Pradesh India 452020 Madhya Pradesh India
2)Chaitanya Singh,Shivajirao Kadam Institute of Technology and Management
3)Dr. Devendra Kumar,ABES Engineering College
4)Dr. Hemant Kumar Singh,SMS Institute Of Technology
5)Rajesh Kumar Maurya,ABES Engineering College
6)Kalpana Dwivedi,ABES Engineering College
7)Himani Jain,ABES Engineering College
8)Dr. Narendra Kumar,DIT University
9)Jay Singh,Institute of Engineering and Technology
10)Dr Yogesh Kumar,CT University
(72)**Name of Inventor :**
1)Deepika Chauhan,Shivajirao Kadam Institute of Technology and Management
2)Chaitanya Singh,Shivajirao Kadam Institute of Technology and Management
3)Dr. Devendra Kumar,ABES Engineering College
4)Dr. Hemant Kumar Singh,SMS Institute Of Technology
5)Rajesh Kumar Maurya,ABES Engineering College
6)Kalpana Dwivedi,ABES Engineering College
7)Himani Jain,ABES Engineering College
8)Dr. Narendra Kumar,DIT University
9)Jay Singh,Institute of Engineering and Technology
10)Dr Yogesh Kumar,CT University

(57) Abstract :
In this invention, a novel system is developed based on supervised deep learning which is able to classify network traffic in smart cities whether it is benign or malicious. Best model is found based on success rate of detection hence feature selection method is integrated with supervised learning algorithm in this invention. Based on research Artificial Neural Network (ANN) is found to be outperform than support vector machine (SVM) as the proposed invention involves deep learning along with wrapper feature selection in order to classify network traffic. Intrusion detection is the first step in prevention security attack in smart cities. Network traffic is classified by this system using both SVM algorithm and ANN algorithm by utilizing NSL-KDD dataset. It is found that success rate of intrusion detection for the proposed Deep Learning based algorithm in smart cities is comparatively efficient than SVM algorithm.

No. of Pages : 12 No. of Claims : 6

(12) PATENT APPLICATION PUBLICATION
(21) Application No.202121007916 A
(19) INDIA
(22) Date of filing of Application :25/02/2021
(43) Publication Date : 05/03/2021

(54) Title of the invention : A MASSAGER WITH SINGLE ROD ECCENTRIC DRIVE MECHANISM TO PROVIDE SYNCHRONIZE WAVE OSCILLATION TREATMENT

(51) International classification	:A61H0023020000, A61H0001000000, A61H0015000000, F04B0009040000, F16H0037120000	(71)**Name of Applicant :** **1)Uma Innovative Manufacturing Company** Address of Applicant :On Bavla - Bagodara Highway, Near - Savasthi Jain Temple, Opp. Ramnagar Patiya, Bavla Ahmedabad - 382220 Gujarat, India Gujarat India
(31) Priority Document No	:NA	(72)**Name of Inventor :**
(32) Priority Date	:NA	**1)Patel Baldevbhai Ramanlal**
(33) Name of priority country	:NA	
(86) International Application No	:NA	
Filing Date	:NA	
(87) International Publication No	: NA	
(61) Patent of Addition to Application Number	:NA	
Filing Date	:NA	
(62) Divisional to Application Number	:NA	
Filing Date	:NA	

(57) Abstract :
Abstract A MASSAGER WITH SINGLE ROD ECCENTRIC DRIVE MECHANISM TO PROVIDE SYNCHRONIZE WAVE OSCILLATION TREATMENT The present invention provides a massager with single rod eccentric drive mechanism to provide synchronize wave oscillation treatment. A single rod eccentric drive mechanism provides a wave oscillation motion and heating massage in bed and chairs. The massager includes motors at proximal end of the shaft which accompanied through the plurality of cam assembly and bearing respectively. A timing belt pulley is at distal end of massager to regulate frequency of massage. The arrangement of angular grooved shaft and cam assembly provides lateral conversion of axial rotation movement of shaft in to eccentric movement at the differently positioned cam at regular interval. The cam assembly accompanied with the needle roller housing is at different vertical position, while the rotation of shaft in one circle is equal to 0°-360° the cam assembly is arranged in ascending angles like 0°,45°,90°,135°,180°,225°,270°,315°. The user will be lift on stationary knob adjacent to movable knobs during the operation. FIG. 7

No. of Pages : 39 No. of Claims : 7

(12) PATENT APPLICATION PUBLICATION
(21) Application No.202121008337 A
(19) INDIA
(22) Date of filing of Application :27/02/2021
(43) Publication Date : 05/03/2021

(54) Title of the invention : SYSTEM AND METHOD FOR AUTOMATIC TRACKING AND MANAGING INTERIOR DESIGNING

(51) International classification	:G06Q0010060000, G06Q0010100000, G01C0015000000, G06Q0010080000, G06F0111020000
(31) Priority Document No	:NA
(32) Priority Date	:NA
(33) Name of priority country	:NA
(86) International Application No	:NA
Filing Date	:NA
(87) International Publication No	: NA
(61) Patent of Addition to Application Number	:NA
Filing Date	:NA
(62) Divisional to Application Number	:NA
Filing Date	:NA

(71)**Name of Applicant :**
1)Mr. Pratik Kashinath Sakpal
Address of Applicant :Flat No-D/5, Vaishnavi dham, Manaji Nagar, Narhe, Pune-411401, Maharashtra, India. Maharashtra India
(72)**Name of Inventor :**
1)Mr. Pratik Kashinath Sakpal

(57) Abstract :
ABSTRACT: Title: System and Method for Automatic Tracking and Managing Interior Designing The present disclosure proposes a system and method for automatic tracking and managing interior designing is disclosed that aids the user to automatically track execution progress of interior design plans and eliminates delays in progress and payments thereof. The system comprises an input module 101, a processor 102, a work progress determination module 103, a payment determination module 104, a display module 105 and an accounting module 106. The proposed system aids even unskilled, uneducated employees or contractors to estimate completion time of individual tasks and overall interior design plan execution and eliminates the need for expertise. Further, the system provides indications for due payments and completed payments from client-side and aids the user to collect due amounts without any delay. The proposed system acts as a follow-up model and aids in quality management and time management of interior design plan execution.

No. of Pages : 16 No. of Claims : 8

(12) PATENT APPLICATION PUBLICATION
(21) Application No.202121008370 A
(19) INDIA
(22) Date of filing of Application :27/02/2021
(43) Publication Date : 05/03/2021

(54) Title of the invention : AN ASSEMBLY FOR HOLDING A BIO-FLUID EXTRACTION TUBE

(51) International classification	:A61B0017000000, A61B0017290000, B25B0005100000, A61B0034350000, B25J0009160000
(31) Priority Document No	:NA
(32) Priority Date	:NA
(33) Name of priority country	:NA
(86) International Application No	:NA
Filing Date	:NA
(87) International Publication No	: NA
(61) Patent of Addition to Application Number	:NA
Filing Date	:NA
(62) Divisional to Application Number	:NA
Filing Date	:NA

(71)**Name of Applicant :**
1)SANDE, Abhijeet Rajendra
Address of Applicant :Krishna Institute of Medical SciencesDeemed to be University€ • , Karad, School of Dental Sciences, NH 4, Near Dhebewadi Road, Malkapur, Karad - 415539, Maharashtra. Maharashtra India
2)KAMATE, Wasim Ismail
(72)**Name of Inventor :**
1)SANDE, Abhijeet Rajendra
2)KAMATE, Wasim Ismail

(57) Abstract :
Abstract Title: An Assembly for Holding a Bio-Fluid Extraction Tube. The present invention provides an assembly (100) for holding a bio-fluid extraction tube (10). The bio-fluid extraction tube is adapted to extract bio-fluids from a patient by operating the bio-fluid extraction tube accordingly. The assembly includes an arm (20), a first clamp (30) and a second clamp (40). The arm is having a proximal end (22) and a distal end (24). The arm is flexible. The first clamp is connected to the arm at the proximal end for clamping the arm to an object (200) by operating the first clamp accordingly. The second clamp is connected to the arm at the distal end for clamping the arm to the bio-fluid extraction tube by operating the second clamp accordingly. The arm (20) enables flexible relative movements (20a, 20b, 20c) of the bio-fluid extraction tube with reference to the object (200). The assembly (100) is economically affordable. Figure (5)

No. of Pages : 23 No. of Claims : 7

(12) PATENT APPLICATION PUBLICATION
(21) Application No.202121008392 A
(19) INDIA
(22) Date of filing of Application :28/02/2021
(43) Publication Date : 05/03/2021

(54) Title of the invention : AN ASSEMBLY FOR A MECHANICAL FAN FOR AN OPEN VENDOR CART

(51) International classification	:H05K0003360000, F21V0033000000, B62B0005040000, F04D0025080000, B25J0009100000
(31) Priority Document No	:NA
(32) Priority Date	:NA
(33) Name of priority country	:NA
(86) International Application No	:NA
Filing Date	:NA
(87) International Publication No	: NA
(61) Patent of Addition to Application Number	:NA
Filing Date	:NA
(62) Divisional to Application Number	:NA
Filing Date	:NA

(71)**Name of Applicant :**
1)Phalguni Zambare
Address of Applicant :SVKM's NMIMS MPSTME Shirpur, Maharashtra (INDIA). Maharashtra India
2)Shubham Joshi
(72)**Name of Inventor :**
1)Phalguni Zambare
2)Shubham Joshi

(57) Abstract :
The present invention discloses an assembly for a mechanical fan for an open vendor cart like structure. The present invention provides a plurality of belts attached to all wheels of the cart rotates the rods with the help of the rotation of the cart wheels. Further, the one end of rod R4 is soldered to middle of P3 and other end is soldered to the middle of the fan, and one end Rotation of P3 rotate the fan blades; thus, circulating the air.

No. of Pages : 16 No. of Claims : 10

(12) PATENT APPLICATION PUBLICATION
(21) Application No.202121008396 A
(19) INDIA
(22) Date of filing of Application :28/02/2021
(43) Publication Date : 05/03/2021

(54) Title of the invention : DEVELOPMENT OF RENEWABLE SOLAR PV INVERTER WITH GRID TIE FOR UTILITY POWER BASED ON IOT

(51) International classification	:H02J0003380000, G05F0001670000, H02J0007350000, H02P0009020000, H02S0050000000
(31) Priority Document No	:NA
(32) Priority Date	:NA
(33) Name of priority country	:NA
(86) International Application No	:NA
Filing Date	:NA
(87) International Publication No	: NA
(61) Patent of Addition to Application Number	:NA
Filing Date	:NA
(62) Divisional to Application Number	:NA
Filing Date	:NA

(71)**Name of Applicant :**
1)Dr Vijay Ramkisan Lakwal,Nanasaheb Yashwantrao Narayanrao Chavan Arts, Science and Commerce College
Address of Applicant :Assistant Professor,Department of Zoology,Nanasaheb Yashwantrao Narayanrao Chavan Arts, Science and Commerce College Hirapur Road, Chalisgaon Jalgaon Maharashtra India 424101 Maharashtra India
2)Dr. Tripti Sharma,Maharaja Surajmal Institute of Technology
3)Dr. Jagdish G. Chaudhari,Nagpur Institute of Technology
4)Dr Vaneet Kumar,CT Institute of Engineering, Management&Technology
5)Gudavalli Vijaya Krishna,Lingayas Institute of Management and Technology
6)Dr.Mallikarjunagouda Patil,Basaveshwar Science College
7)Dr.Srinivasarao . Tegala,Avanthi Institute of Engineering and Technology
8)S. Senthil,Sri Venkateswara College Engineering and Technology
9)Dr.A.R.Kavitha,SRM Institute of Science and Technology
10)Dr.M.Geetha,SRM Institute of Science and Technology
(72)**Name of Inventor :**
1)Dr Vijay Ramkisan Lakwal,Nanasaheb Yashwantrao Narayanrao Chavan Arts, Science and Commerce College
2)Dr. Tripti Sharma,Maharaja Surajmal Institute of Technology
3)Dr. Jagdish G. Chaudhari,Nagpur Institute of Technology
4)Dr Vaneet Kumar,CT Institute of Engineering, Management&Technology
5)Gudavalli Vijaya Krishna,Lingayas Institute of Management and Technology
6)Dr.Mallikarjunagouda Patil,Basaveshwar Science College
7)Dr.Srinivasarao . Tegala,Avanthi Institute of Engineering and Technology
8)S. Senthil,Sri Venkateswara College Engineering and Technology
9)Dr.A.R.Kavitha,SRM Institute of Science and Technology
10)Dr.M.Geetha,SRM Institute of Science and Technology

(57) Abstract :
This invention focuses on solar inverter with grid tie for converting DC power generated by solar PV panel into AC power for directly injecting into utility grid. Smart controlling of the system is done based on the technology of Internet of Things. In the development of the proposed solar inverter with grid ties, a boost converter is utilized for regulating the DC power generated by the solar PV panel. This boosted power is then provided as input to a single phase DC to AC converter. Tracking of maximum power point of the generator is done by perturb and observe method. The full capacity of inverter is achieved by operating in unity power factor mode. In the output of phase locked loop, the DC offset problem is solved by generalized second order cascaded integrator method which is also utilized for synchronization of grid for better capability of DC rejection than generalized second order integrator. We are able to develop a prototype of 5 kW rated solar inverter which is able to provide the generated energy to the utility grid from solar PV for irradiance level of 200- 1000 W/m2 .

No. of Pages : 11 No. of Claims : 6

(12) PATENT APPLICATION PUBLICATION
(21) Application No.202121008411 A
(19) INDIA
(22) Date of filing of Application :01/03/2021
(43) Publication Date : 05/03/2021

(54) Title of the invention : WATER PROOF THERMAL LINER FOR PROTECTIVE CLOTHING

(51) International classification	:A41D0031080000, A62B0017000000, B32B0005020000, A41D0031060000, A41D0031120000
(31) Priority Document No	:NA
(32) Priority Date	:NA
(33) Name of priority country	:NA
(86) International Application No	:NA
Filing Date	:NA
(87) International Publication No	: NA
(61) Patent of Addition to Application Number	:NA
Filing Date	:NA
(62) Divisional to Application Number	:NA
Filing Date	:NA

(71)**Name of Applicant :**
1)Prashant Verma
Address of Applicant :A - 503, Sharan Residency II, Opp. Dhanvihar Residency, Near Chandkheda Bus Stand, Chandkheda, Ahmedabad, Gujarat Gujarat India
2)Kiran Verma
(72)**Name of Inventor :**
1)Prashant

(57) Abstract :
ABSTRACT WATER PROOF THERMAL LINER FOR PROTECTIVE CLOTHING A water proof thermal liner (300) for use in protective clothing and method of manufacturing the same is disclosed. The thermal liner (300) is made by creating a raised brush like rib (108) structure on a woven fabric (100) consisting of fire-retardant and heat resistant fibres. A breathable water proof membrane (200) is laminated on the side opposite the rib (108) structure. The air channels created by the rib structure improves the thermal insulation property of the fabric under exposure to heat and flame. The brush (106) like structure on the fabric helps in wicking the moisture from sweat to the water proof membrane for quick and easy removal through evaporation. The water proof thermal liner (300) along with an outer shell (500) is used in construction of a fire fighter€™s clothing using a cut and sew operation. Figure 3

No. of Pages : 23 No. of Claims : 10

(12) PATENT APPLICATION PUBLICATION
(19) INDIA
(22) Date of filing of Application :01/03/2021
(21) Application No.202121008430 A
(43) Publication Date : 05/03/2021

(54) Title of the invention : A WATER TREATMENT PLANT

(51) International classification	:C02F0001000000, C02F0003120000, C02F0001440000, B03D0001140000, C02F0001280000
(31) Priority Document No	:NA
(32) Priority Date	:NA
(33) Name of priority country	:NA
(86) International Application No	:NA
Filing Date	:NA
(87) International Publication No	: NA
(61) Patent of Addition to Application Number	:NA
Filing Date	:NA
(62) Divisional to Application Number	:NA
Filing Date	:NA

(71)**Name of Applicant :**
1)GANESH SUDHAKAR SHETIYE
Address of Applicant :VIDYANAGAR, AT. POST. TAL. BRAHMAPURI., DIST. CHANDRAPUR 441206, MAHARASHTRA, INDIA Maharashtra India
2)APURVA GANESH SHETIYE
(72)**Name of Inventor :**
1)GANESH SUDHAKAR SHETIYE
2)APURVA GANESH SHETIYE

(57) Abstract :
ABSTRACT A WATER TREATMENT PLANT This invention discloses a water treatment plant comprising: a raw water inlet (37); a pump to achieve high velocity raw water flow; an induced vacuum aeration assembly comprising: an aeration chamber (7) for allowing reaction of said high velocity raw water with air; exhaust vents (10, 11), for release of gases from said aerated water to form gas-released aerated water; a hybrid filtration media (53, 50, 49, 48), to receive said gas-released aerated water to be treated and filtered to obtain treated water; and a treated water tank (54) to house said hybrid filtration media (53, 50, 49, 48) from where it receives gas-released aerated water to pass through it, the treated water is dispensed by means of a treated water outlet (32) and precipitate containing dirty water is dispensed by means of a backwash drain point (36) .

No. of Pages : 29 No. of Claims : 11

(12) PATENT APPLICATION PUBLICATION
(21) Application No.202121008590 A
(19) INDIA
(22) Date of filing of Application :01/03/2021
(43) Publication Date : 05/03/2021

(54) Title of the invention : A BOGIE SUSPENSION SYSTEM FOR AN UNMANNED GROUND VEHICLE

(51) International classification	:B64C0025340000, B60G0005020000, B62D0055060000, G01D0005200000, H02P0006140000	(71)**Name of Applicant :** **1)ANURAG ASHOK GAIKWAD** Address of Applicant :PLOT NO. 53, 'JIJAI', GROWTH CENTER, CIDCO, MAHANAGAR-1, WALUJ, TISGAON, AURANGABAD, MAHARASHTRA, 431136, INDIA Maharashtra India
(31) Priority Document No	:NA	
(32) Priority Date	:NA	(72)**Name of Inventor :**
(33) Name of priority country	:NA	**1)ANURAG ASHOK GAIKWAD**
(86) International Application No	:NA	
Filing Date	:NA	
(87) International Publication No	: NA	
(61) Patent of Addition to Application Number	:NA	
Filing Date	:NA	
(62) Divisional to Application Number	:NA	
Filing Date	:NA	

(57) Abstract :
A bogie suspension system for an UGV is provided. The system includes at least four bogie axles; Each of the at least four bogie axles include a bogie beam including at least two wheel hubs, a supporting tube operatively coupled along a pivot axis, and a propeller shaft housed within the supporting tube; an obstacle detection unit having a front set of sensors and a rear set of sensors, configured to detect one or more obstacles present on the front end and the rear end of the UGV respectively; a suspension control unit having a swivel motor configured to rotate the bogie beam to nullify an uneven effect of the terrain while the UGV is travelling, and a rotary encoder configured to determine a position of the bogie beam to calculate an amount of rotation of the corresponding bogie beam to operate the bogie suspension system on the terrain. FIG. 1

No. of Pages : 20 No. of Claims : 9

(12) PATENT APPLICATION PUBLICATION
(21) Application No.202121008603 A
(19) INDIA
(22) Date of filing of Application :01/03/2021
(43) Publication Date : 05/03/2021

(54) Title of the invention : SYSTEM AND METHOD FOR CLEAN ENERGY GENERATION

(51) International classification	:F03G0007100000, B60R0016030000, C10J0003720000, F03B0017020000, H02K0053000000	(71)**Name of Applicant :** **1)Swati Prakash Kale** Address of Applicant :near Bharat Jyoti bus stop, D2/3 Ashtavinayak, State Bank SOC Bibwewadi, Pune City, Pune, Market yard, Maharashtra- Maharashtra India **2)Nachiket Bhushan Mendki** **3)Aniket Harshal Ghisad**
(31) Priority Document No	:NA	
(32) Priority Date	:NA	
(33) Name of priority country	:NA	
(86) International Application No	:NA	
Filing Date	:NA	
(87) International Publication No	: NA	
(61) Patent of Addition to Application Number	:NA	
Filing Date	:NA	
(62) Divisional to Application Number	:NA	
Filing Date	:NA	
		(72)**Name of Inventor :** **1)Swati Prakash Kale** **2)Nachiket Bhushan Mendki** **3)Aniket Harshal Ghisad**

(57) Abstract :
TITLE: SYSTEM AND METHOD FOR CLEAN ENERGY GENERATION The invention provides a system and method for clean energy generation. The system works on the principle of gravity where the falling weight rotates the pulleys which in turn drive the motor to rotate and behave like a generator. In one aspect the invention provides a pulley-based system for the generation of electricity. FIGURE 1

No. of Pages : 15 No. of Claims : 8

(12) PATENT APPLICATION PUBLICATION
(21) Application No.202121008632 A
(19) INDIA
(22) Date of filing of Application :02/03/2021
(43) Publication Date : 05/03/2021

(54) Title of the invention : A WHITEBOARD CLEANING ASSEMBLY

(51) International classification	:A61B0018180000, A61B0017320500, B67D0001000000, B41J0002165000, E01H0001080000	(71)**Name of Applicant :** **1)Dr. Praveen Kumar Sharma** Address of Applicant :Associate Professor of Mathematics Department of Mathematics, SVIS Shri Vaishnav Vidyapeeth Vishwavidyalaya, Indore-453111, MP, India Madhya Pradesh India
(31) Priority Document No	:NA	**2)Dr. Shivram Sharma**
(32) Priority Date	:NA	**3)Palash Goyal**
(33) Name of priority country	:NA	**4)Preet Jain**
(86) International Application No	:NA	**5)Dr. Akhilesh Kumar Sharma**
Filing Date	:NA	**6)Mr. Kunal Dhawale**
(87) International Publication No	: NA	(72)**Name of Inventor :**
(61) Patent of Addition to Application Number	:NA	**1)Dr. Praveen Kumar Sharma**
Filing Date	:NA	**2)Dr. Shivram Sharma**
		3)Palash Goyal
(62) Divisional to Application Number	:NA	**4)Preet Jain**
Filing Date	:NA	**5)Dr. Akhilesh Kumar Sharma**
		6)Mr. Kunal Dhawale

(57) Abstract :
The present invention discloses a whiteboard cleaning assembly. The present invention includes, but not limited to, a motor with at least one switch to activate or deactivate the assembly; a gear-pair positioned on a frame and driven by the motor; a rod having the ability to oscillate in a certain fix angle and having at least one gear from the gear-pair. Further, the frame fixed at the top side of the board, and the rod is connected with a wiping member through an extendable bar.

No. of Pages : 20 No. of Claims : 9

(12) PATENT APPLICATION PUBLICATION
(21) Application No.202121008655 A
(19) INDIA
(22) Date of filing of Application :02/03/2021
(43) Publication Date : 05/03/2021

(54) Title of the invention : A METHOD FOR ISOLATION OF RARE ENDOPHYTES FROM A HOST PLANT

(51) International classification	:A01H0004000000, A01N0063000000, A01G0007040000, C12R0001645000, A01N0063300000
(31) Priority Document No	:NA
(32) Priority Date	:NA
(33) Name of priority country	:NA
(86) International Application No	:NA
Filing Date	:NA
(87) International Publication No	: NA
(61) Patent of Addition to Application Number	:NA
Filing Date	:NA
(62) Divisional to Application Number	:NA
Filing Date	:NA

(71)**Name of Applicant :**
1)Dr. Anita Vishwanath Handore
Address of Applicant :11-B, Jeevadeep Apt., Opposite Dhanwantari Medical College, Abhiyantanagar, Kamathwada Road, Nashik€422008, (Maharashtra, India) Maharashtra India
2)Dr. Sharad Ratan Khandelwal
3)Dr. Avinash Dinesh kumar Bholay
4)Mr. Dilip Vishwanath Handore
(72)**Name of Inventor :**
1)Dr. Anita Vishwanath Handore
2)Dr. Sharad Ratan Khandelwal
3)Dr. Avinash Dinesh kumar Bholay
4)Mr. Dilip Vishwanath Handore

(57) Abstract :
A method for isolation of rare endophytes from a host plant comprises the steps of adding the chemical composition prepared from the mixture of Silver Nitrate; Adenine Sulphate, Pectin and a plant growth regulator which is added to basic plant culture medium followed by sterilizing the explants. The sterilized explants are initiated on modified plant culture media under aseptic conditions and incubated in air-conditioned culture room at 25±2ºC temperature with relative humidity of 65% under 16/8 h Light/dark photoperiod cycle. The microbial colonies which are observed only after 15th day of explant initiation are isolated as endophytes. The inoculated explant cultures which have not shown any microbial colonies are sub-cultured on similar fresh media under aseptic conditions and incubated under similar conditions. The microbial colonies observed between 15th€45th day of explant initiation are isolated, purified, identified and maintained as the rare endophytes.

No. of Pages : 23 No. of Claims : 12

(12) PATENT APPLICATION PUBLICATION
(21) Application No.202121008689 A
(19) INDIA
(22) Date of filing of Application :02/03/2021
(43) Publication Date : 05/03/2021

(54) Title of the invention : AN IMPROVED APPARATUS AND METHOD FOR SEPARATING AND PROCESSING COMPONENTS OF PLANT STALKS

(51) International classification	:B26D0003000000, C13B0005040000, B27J0001000000, C13B0005020000, A22C0025000000	(71)**Name of Applicant :** **1)4E Cane Multiproducts LLP** Address of Applicant :798, Bhandarkar Road Pune -411004 (India) Maharashtra India (72)**Name of Inventor :** **1)Taraprakash Prabhakar Vartak**
(31) Priority Document No	:NA	
(32) Priority Date	:NA	
(33) Name of priority country	:NA	
(86) International Application No	:NA	
Filing Date	:NA	
(87) International Publication No	: NA	
(61) Patent of Addition to Application Number	:NA	
Filing Date	:NA	
(62) Divisional to Application Number	:NA	
Filing Date	:NA	

(57) Abstract :
An improved apparatus and method for separating and processing components of plant stock The apparatus consists of major stations for billeting, feeding, slitting, milling, rind-pith separating & processing of rind and pith. Stalks pass through a billeting apparatus which billets are fed by a conveyor belt (8) to a billet splitting station consisting a circular knife (10) slitting billets in two longitudinal halves further feeding to a single pith cutting station consisting of two motor driven rollers (12 & 13). The top roller (12) cutting away the inner pith, the lower roller (13) propelling the cane. The pith cutter roller (12) is designed for ease of blade re-sharpening. The pith grated at high speed is thrown at large distance while rind falls nearby thus separating rind and pith. The sugar in rind is microbiologically processed either by adding solution of lactobacillus or by subjecting the rind to bio- methanation. The pith collected in a barrel is de-juiced by a static press.

No. of Pages : 24 No. of Claims : 8

(12) PATENT APPLICATION PUBLICATION
(21) Application No.202121008891 A
(19) INDIA
(22) Date of filing of Application :03/03/2021
(43) Publication Date : 05/03/2021

(54) Title of the invention : METHOD OF OBTAINING ADSORBENTS FOR A FILTRATION APPARATUS

(51) International classification	:G01N0021350000, G01N0033000000, C10G0053080000, G01J0003453000, B01J0020020000	(71)**Name of Applicant :** **1)DR. KAVITA GOUR** Address of Applicant :N-2 NAGOMALI LAY-OUT, RESHIMBAGH NAGPUR Maharashtra India **2)KSHITIJ CHIRWATKAR** **3)DEWALATA KRUSHNAJI DONADKAR**
(31) Priority Document No	:NA	(72)**Name of Inventor :**
(32) Priority Date	:NA	**1)KSHITIJ CHIRWATKAR**
(33) Name of priority country	:NA	
(86) International Application No	:NA	
Filing Date	:NA	
(87) International Publication No	: NA	
(61) Patent of Addition to Application Number	:NA	
Filing Date	:NA	
(62) Divisional to Application Number	:NA	
Filing Date	:NA	

(57) Abstract :
METHOD OF OBTAINING ADSORBENTS FOR A FILTRATION APPARATUS A method of obtaining adsorbents from barks of trees to be used in a filtration apparatus (112). The method includes cutting the barks of the trees into smaller pieces and washing the smaller pieces in a distilled water to obtain clean pieces of barks. The method includes drying the clean pieces of barks in sunlight to remove moisture from the clean pieces of barks to obtain dried pieces of barks. Treating the dried pieces of barks with a formaldehyde to release a colour of dried pieces of barks. Heating the treated pieces of barks in a muffle furnace in an absence of air for a particular period of time to obtain adsorbents. The method includes characterizing the adsorbents using at least one of (i) a scanning electron microscope (SEM) test, and/or (ii) a Fourier Transform Infrared Spectroscopy (FTIR) test to study a quality of the adsorbents for filtering an effluent. FIG. 3

No. of Pages : 21 No. of Claims : 10

(12) PATENT APPLICATION PUBLICATION
(19) INDIA
(22) Date of filing of Application :06/01/2021
(21) Application No.202127000576 A
(43) Publication Date : 05/03/2021

(54) Title of the invention : PARTIAL COST CALCULATION

(51) International classification	:H04N0019567000, H04N0019147000, H04N0019543000, H04N0019530000, H04N0019523000
(31) Priority Document No	:62/682150
(32) Priority Date	:07/06/2018
(33) Name of priority country	:U.S.A.
(86) International Application No	:PCT/IB2019/054710
Filing Date	:06/06/2019
(87) International Publication No	:WO 2019/234672
(61) Patent of Addition to Application Number	:NA
Filing Date	:NA
(62) Divisional to Application Number	:NA
Filing Date	:NA

(71)**Name of Applicant :**
1)BEIJING BYTEDANCE NETWORK TECHNOLOGY CO., LTD.
Address of Applicant :Room B-0035, 2/F, No.3 Building, No.30, Shixing Road, Shijingshan District Beijing 100041 China
2)BYTEDANCE INC.
(72)**Name of Inventor :**
1)LIU, Hongbin
2)ZHANG, Li
3)ZHANG, Kai
4)WANG, Yue

(57) Abstract :
A method of decoding a bitstream comprising a digital representation of a video includes decoding motion information for a current video block from the bitstream, estimating matching costs of the current video block using one or more templates based on a partial set of pixel locations in each of the one or more templates, where in the each of the one or more templates includes a video block with multiple samples and refining the motion information of the current video block using a template having a minimum matching cost.

No. of Pages : 27 No. of Claims : 23

(12) PATENT APPLICATION PUBLICATION
(21) Application No.202127008177 A
(19) INDIA
(22) Date of filing of Application :26/02/2021
(43) Publication Date : 05/03/2021

(54) Title of the invention : ANODE MATERIAL, ELECTROCHEMICAL DEVICE AND ELECTRONIC DEVICE USING THE SAME

(51) International classification	:H01M0010052500, H01M0004480000, H01M0004360000, H01M0004380000, H01M0004620000
(31) Priority Document No	:201811541619.8
(32) Priority Date	:17/12/2018
(33) Name of priority country	:China
(86) International Application No	:PCT/CN2019/125945
Filing Date	:17/12/2019
(87) International Publication No	:WO 2020/125621
(61) Patent of Addition to Application Number	:NA
Filing Date	:NA
(62) Divisional to Application Number	:NA
Filing Date	:NA

(71)**Name of Applicant :**
1)NINGDE AMPEREX TECHNOLOGY LIMITED
Address of Applicant :No. 1 Xingang Road Zhangwan Town, Jiaocheng District Ningde, Fujian 352100 China
(72)**Name of Inventor :**
1)JIANG, Daoyi
2)CUI, Hang
3)XIE, Yuansen

(57) Abstract :
An anode material and an electrochemical device and an electronic device using the same are disclosed. The anode material includes a silicon compound SiO x(1), wherein x is about 0.5-1.5; an oxide MeO y layer(2), the MeO y layer(2) coating the silicon compound SiO x(1), wherein Me includes at least one of Al, Si, Ti, Mn, V, Cr,Co, and Zr, wherein y is about 0.5-3; and a carbon layer(3), the carbon layer(3) coating the MeO y layer(2); wherein the surface of the MeO y layer(2) adjacent to the carbon layer(3) has an open pore structure, and at least part of the open pore structure is filled with the carbon layer(3). The anode material can obviously improve the cycle performance of the electrochemical device and significantly reduce the impedance of the electrochemical device.

No. of Pages : 32 No. of Claims : 18

(12) PATENT APPLICATION PUBLICATION
(21) Application No.201941047889 A
(19) INDIA
(22) Date of filing of Application :22/02/2020
(43) Publication Date : 05/03/2021

(54) Title of the invention : An anti-cancerous nano-composition comprising a lectin from a marine crab and its process thereof.

(51) International classification	:C07K0014435000, C07K0014370000, A01K0069060000, C07F0007080000, A01N0065200000	(71)**Name of Applicant :** **1)J. Rajaselvam** Address of Applicant :Department of Zoology, Holy Cross College, Roch Nagar, Kurusady Nagercoil - 629004 Tamil Nadu India Tamil Nadu India **2)Dr. M.R. Basil Rose**
(31) Priority Document No	:NA	
(32) Priority Date	:NA	(72)**Name of Inventor :**
(33) Name of priority country	:NA	**1)J. Rajaselvam**
(86) International Application No	:NA	**2)Dr. M.R. Basil Rose**
Filing Date	:NA	
(87) International Publication No	: NA	
(61) Patent of Addition to Application Number	:NA	
Filing Date	:NA	
(62) Divisional to Application Number	:NA	
Filing Date	:NA	

(57) Abstract :
An anti-cancerous nano-composition comprising a lectin from a marine crab and its process thereof. The present invention discloses a nano-composition comprising an anti-cancerous lectin named as OtL (Ozius tuberculosus lectin) from the hemolymph of the marine crab Ozius tuberculosus and its process thereof. Sialic acid specific lectins (OtL) are potential tools not only to identify the various microbial pathogens and malignant tumors but also to suppress the progression and arrest their growth by binding to the various sialyl epitopes found on their surface membrane. There is no cited document in the prior-art disclosing the process of extraction and purification of the fucose and sialic acid specific lectin from the Indian marine crab Ozius tuberculosus, a nano-composition comprising the same and its process thereof. Hence the present invention attempts to investigate and provide solutions to overcome those difficulties in the prior-art. The nano-composition can be used as a valuable diagnostic tool for recognizing tumour associated antigens for drug-delivery and targeting tumor cells.

No. of Pages : 27 No. of Claims : 9

(12) PATENT APPLICATION PUBLICATION
(21) Application No.202041006207 A
(19) INDIA
(22) Date of filing of Application :13/02/2020
(43) Publication Date : 05/03/2021

(54) Title of the invention : A WIPER LINKAGE SYSTEM FOR A VEHICLE

(51) International classification	:H01M0010440000, G11B0017049000, G03G0015080000, A24D0003060000, B65D0006220000	(71)**Name of Applicant :** **1)BEML Limited** Address of Applicant :BEML Soudha, 23/1, 4th Main, Sampangirama Nagar, Bengaluru - 560 027, Karnataka, India Karnataka India
(31) Priority Document No	:NA	(72)**Name of Inventor :**
(32) Priority Date	:NA	**1)M, Ramesh Kumar Raju**
(33) Name of priority country	:NA	**2)KURAKULA, Anil Kumar**
(86) International Application No	:NA	
Filing Date	:NA	
(87) International Publication No	: NA	
(61) Patent of Addition to Application Number	:NA	
Filing Date	:NA	
(62) Divisional to Application Number	:NA	
Filing Date	:NA	

(57) Abstract :
Present subject matter relates to wiper linkage arrangement for vehicles to wipe required area of the windshield. The windshield for a vehicle is split between a driver and a co-driver side windshield. Further, the height of the windshield is smaller than the width of the windshield. The wiper linkage system (100) contains two modular type wiper systems with a dual wiper blades (20) operated separately with two motors (40). Two motors (40) are synchronized to run with a single switch operated from a driver cabin. The wiper linkage driven by the motor is designed to modify the wiping area as required for cleaning required area of windshield.

No. of Pages : 11 No. of Claims : 5

(12) PATENT APPLICATION PUBLICATION
(21) Application No.202041006348 A
(19) INDIA
(22) Date of filing of Application :13/02/2020
(43) Publication Date : 05/03/2021

(54) Title of the invention : ROLL-OVER PROTECTIVE SUPPORT STRUCTURE FOR MOUNTING A CABIN OF A DUMP TRUCK

(51) International classification	:H01M0010440000, G11B0017049000, G03G0015080000, A24D0003060000, B65D0006220000	(71)**Name of Applicant :** **1)BEML Limited** Address of Applicant :BEML Soudha, 23/1, 4th Main, Sampangirama Nagar, Bengaluru - 560 027, Karnataka, India Karnataka India
(31) Priority Document No	:NA	(72)**Name of Inventor :**
(32) Priority Date	:NA	**1)SELVARAJ, Suthakar**
(33) Name of priority country	:NA	**2)MUNIYANAKOPPA, Renuka Raj Yallappa**
(86) International Application No	:NA	
Filing Date	:NA	
(87) International Publication No	: NA	
(61) Patent of Addition to Application Number	:NA	
Filing Date	:NA	
(62) Divisional to Application Number	:NA	
Filing Date	:NA	

(57) Abstract :
The present subject matter discloses a roll-over protective support structure (100) for mounting a cabin (20) of a dump truck (10). The roll-over protective support structure (100) comprises a top horizontal member (110), a base horizontal member (120) and a pair of vertical members (130). The top horizontal member (110) is configured for mounting one side of the cabin (20). The base horizontal member (120) is configured to be mounted with a first chassis frame (32) of the dump truck (10). The pair of vertical members (130) is configured to be mounted between the base horizontal member (120) and the top horizontal member (110).

No. of Pages : 13 No. of Claims : 10

(12) PATENT APPLICATION PUBLICATION
(21) Application No.202041007536 A
(19) INDIA
(22) Date of filing of Application :21/02/2020
(43) Publication Date : 05/03/2021

(54) Title of the invention : HYDRAULIC TORQUE CONVERTER ASSEMBLY

(51) International classification	:H01M0010440000, G11B0017049000, G03G0015080000, A24D0003060000, B65D0006220000	(71)**Name of Applicant :** **1)BEML Limited** Address of Applicant :BEML Soudha, 23/1, 4th Main, Sampangirama Nagar, Bengaluru - 560 027, Karnataka, India Karnataka India
(31) Priority Document No	:NA	(72)**Name of Inventor :**
(32) Priority Date	:NA	**1)SENTHURPANDI, Jeyakumar**
(33) Name of priority country	:NA	**2)BANGALORE HARI RAO, Madhusudhan**
(86) International Application No	:NA	**3)MUNISWAMY, Sasikumar**
Filing Date	:NA	**4)SHIVANNA, Bharath**
(87) International Publication No	: NA	
(61) Patent of Addition to Application Number	:NA	
Filing Date	:NA	
(62) Divisional to Application Number	:NA	
Filing Date	:NA	

(57) Abstract :
The invention provides a squash type hydraulic torque converter assembly (101) for automatic transmission comprising, an impeller (3) configured with plurality of impeller blades (3C) extended from shell (3A) to core (3B) portion of impeller (3). A guide (15) is configured as rotating member with curvature and coupled with impeller (3) for energy balancing along with retainer (24). A turbine (4), an output member configured to be coupled with a transmission input shaft (25) by an output drive unit (16), a housing (9) and the output drive unit (16) are configured to be supported by radial bearing (34), a stator (5) configured to be mounted between the impeller (3) and the turbine (4). An one-way clutch (22A) is configured to be mounted on a spacer (22). A race (6) is configured to be mounted on the one-way clutch (22A). A brass type heat resistance bush (19, 20) is configured to be assembled along with spacer (22), a hollow shaft sub-assembly (17) is configured to lock the spacer (22); and a lockup clutch assembly is configured to avoid the slippage and switch over from torque converter mode to lockup mode. Further, the assembly provides flat torque absorption capacity (901) at higher load demand conditions which ensure better traction force, optimum heat rejection and improved oil circulation inside the elliptical torus portion. Further, the assembly ensures a pularity blade (3C, 4C & 5C) of torque converter are configured with two-dimensional curvatures.

No. of Pages : 33 No. of Claims : 16

(12) PATENT APPLICATION PUBLICATION
(21) Application No.202041007960 A
(19) INDIA
(22) Date of filing of Application :25/02/2020
(43) Publication Date : 05/03/2021

(54) Title of the invention : DAMPER INSTALLATION ASSEMBLY WITH TWIN BEARING

(51) International classification	:H01M0010440000, G11B0017049000, G03G0015080000, A24D0003060000, B65D0006220000	(71)**Name of Applicant :** **1)BEML Limited** Address of Applicant :BEML Soudha, 23/1, 4th Main, Sampangirama Nagar, Bengaluru - 560 027, Karnataka, India Karnataka India
(31) Priority Document No	:NA	(72)**Name of Inventor :**
(32) Priority Date	:NA	**1)AVVARU, Subramanyam**
(33) Name of priority country	:NA	**2)RAMPURAE, Vittal Narayanarao**
(86) International Application No	:NA	**3)SIDDARAJU, Shyamsundar Nalluru**
Filing Date	:NA	
(87) International Publication No	: NA	
(61) Patent of Addition to Application Number	:NA	
Filing Date	:NA	
(62) Divisional to Application Number	:NA	
Filing Date	:NA	

(57) Abstract :
The invention provides damper installation assembly with a twin bearing (4) coaxially configured into a damper installation assembly cover (3) to provide firm support to a secondary shaft (6), wherein the damper installation assembly cover (3) is adapted to form an enclosure for damper assembly. An outer body (8) is configured to be coupled with an engine flywheel (12). A rubber cushion (10) is mounted between an inner body (9) and the outer body (8) for transferring the rotary motion from the outer body (8) to the inner body (9) to rotate the secondary shaft (6); and a coupling (5) configured to be mounted on the end of the secondary shaft (6) for providing the motion to the transmission. The twin bearing assembly eliminates the resting of the pilot bearing on the flywheel there by disconnecting the secondary shaft from the flywheel, which will result in minimizing the vibration transfer to the flywheel housing (cover).

No. of Pages : 11 No. of Claims : 8

(12) PATENT APPLICATION PUBLICATION
(19) INDIA
(22) Date of filing of Application :26/02/2020
(21) Application No.202041008048 A
(43) Publication Date : 05/03/2021

(54) Title of the invention : A SYNTHETIC COMPOSITE AS BONE GRAFT AND THE METHOD THEREOF

(51) International classification	:H04L0029080000, C07D0417140000, C07D0417060000, C07D0413140000, C07D0263320000
(31) Priority Document No	:NA
(32) Priority Date	:NA
(33) Name of priority country	:NA
(86) International Application No	:NA
Filing Date	:NA
(87) International Publication No	: NA
(61) Patent of Addition to Application Number	:NA
Filing Date	:NA
(62) Divisional to Application Number	:NA
Filing Date	:NA

(71)**Name of Applicant :**
1)BONE SUBSTITUTES
Address of Applicant :2/1088, Parijatham Street, Ezhil Nagar, Iyer Bungalow, Madurai-625 014, Tamil Nadu, India Tamil Nadu India
(72)**Name of Inventor :**
1)SANKARALINGAM PUGALANTHI PANDIAN

(57) Abstract :
The invention is for a synthetic composite for a bone graft comprising of: bio inert polymers comprising poly lactic acid, poly D, L-Lactic acid; bio active polymer consisting of polypropylene fumarate or diester of fumaric acid and propylene diol (1,2-Diol); and a bioactive inorganic component consisting of a metal fluorophosphates glass powder wherein the amount of the bioactive components is upto 30% (w/w) of the composite. The bioactive inorganic metal fluorophosphates glass powder of the composite is one of zinc fluorophosphate, magnesium fluorophosphate or silver fluorophosphate. The invention pertains to the method of making the scaffold, and also the 3D printed scaffold.

No. of Pages : 117 No. of Claims : 25

(12) PATENT APPLICATION PUBLICATION
(21) Application No.202041008382 A
(19) INDIA
(22) Date of filing of Application :27/02/2020
(43) Publication Date : 05/03/2021

(54) Title of the invention : AMINO ACID BASED ORGANIC GROWTH PROMOTERS FOR FOLIAR SPRAY APPLICATION IN AGRICULTURE

(51) International classification	:C05G0003000000, A01N0065000000, C05D0009020000, G06T0007000000, C02F0001440000	(71)**Name of Applicant :** **1)GOLVEPALLE RAMACHANDRA SESHAGIRI** Address of Applicant :Vistas Agrotech, Sy.No. 7/A, Solipet (V), Bommala Ramaram (M), Yadadri Bhongir District, Telangana- 508116, India. Telangana India
(31) Priority Document No	:NA	(72)**Name of Inventor :**
(32) Priority Date	:NA	**1)GOLVEPALLE RAMACHANDRA SESHAGIRI**
(33) Name of priority country	:NA	
(86) International Application No	:NA	
Filing Date	:NA	
(87) International Publication No	: NA	
(61) Patent of Addition to Application Number	:NA	
Filing Date	:NA	
(62) Divisional to Application Number	:NA	
Filing Date	:NA	

(57) Abstract :
Title:AMINO ACID BASED ORGANIC GROWTH PROMOTERS FOR FOLIAR SPRAY APPLICATION IN AGRICULTURE€ • . 7. ABSTRACT A composition and process for enhancing plant growth comprising of amino acids gathered from Fish Tilapia enzymes mainly of plant origin and more preferably of organic origin and preservatives, preferably food grade preservatives. The processed organic growth factor composition act minimizes the usage of chemical fertilizers that increases yields of plants by up to 30 % to 50%, which is economic for farmers. The final preparation which contains 19 main amino acids, macronutrients (nitrogen (N), phosphorus (P), potassium (K)) and organic matter. The composition is used in agriculture as a foliar spray application product in combination with required amounts of water that gives maximum yield that can be achieved by applying in smaller quantities.

No. of Pages : 14 No. of Claims : 8

(12) PATENT APPLICATION PUBLICATION
(21) Application No.202041008403 A
(19) INDIA
(22) Date of filing of Application :27/02/2020
(43) Publication Date : 05/03/2021

(54) Title of the invention : SYSTEM FOR ELIMINATING CAVITATION AND OPTIMISING CYCLE TIME IN THE HYDRAULIC CIRCUIT OF CONSTRUCTION VEHICLE

(51) International classification	:H01M0010440000, G11B0017049000, G03G0015080000, A24D0003060000, B65D0006220000	(71)**Name of Applicant :** **1)BEML Limited** Address of Applicant :BEML Soudha, 23/1, 4th Main, Sampangirama Nagar, Bengaluru - 560 027, Karnataka, India Karnataka India
(31) Priority Document No	:NA	(72)**Name of Inventor :**
(32) Priority Date	:NA	**1)KUMAR, Hemant**
(33) Name of priority country	:NA	**2)Jagadish**
(86) International Application No	:NA	**3)Harsha**
Filing Date	:NA	**4)Vijay**
(87) International Publication No	: NA	**5)MAJHI, Namita**
(61) Patent of Addition to Application Number	:NA	
Filing Date	:NA	
(62) Divisional to Application Number	:NA	
Filing Date	:NA	

(57) Abstract :
Present subject matter relates to elimination of cavitation in hydraulic circuit of construction vehicle and optimizing the cycle time of operating the vehicle attachments. The use of two pumps with less hydraulic oil flow for carrying out operation of the vehicle attachments leads to generation of cavitation in hydraulic circuit, which leads to failure of vehicle hydraulic system. The introduction of monoblock (40) in hydraulic circuit of vehicle enables use of flow from three pumps for carrying out operation of the vehicle attachments. This eliminates cavitation in hydraulic circuit and optimizes the cycle time of operating the vehicle attachments. The monoblock (40) activation is carried out by operator through a joystick configured on control panel of construction vehicle. The addition of monoblock (40) in hydraulic circuit leads to elimination of cavitation and optimization of cycle time in construction vehicle.

No. of Pages : 10 No. of Claims : 5

(12) PATENT APPLICATION PUBLICATION
(21) Application No.202041008931 A
(19) INDIA
(22) Date of filing of Application :02/03/2020
(43) Publication Date : 05/03/2021

(54) Title of the invention : READY TO EAT SORGHUM BASED FOOD PRODUCT

(51) International classification	:H01M0010440000, G11B0017049000, G03G0015080000, A24D0003060000, B65D0006220000
(31) Priority Document No	:NA
(32) Priority Date	:NA
(33) Name of priority country	:NA
(86) International Application No	:NA
Filing Date	:NA
(87) International Publication No	: NA
(61) Patent of Addition to Application Number	:NA
Filing Date	:NA
(62) Divisional to Application Number	:NA
Filing Date	:NA

(71)**Name of Applicant :**
1)SRM Institute of Science and Technology
Address of Applicant :Kattankulathur, Chennai-603203, Tamil Nadu, India Tamil Nadu India
(72)**Name of Inventor :**
1)SANIKA MADHAV BHOKARIKAR
2)M. MAHESH KUMAR
3)S. PERIYAR SELVAM

(57) Abstract :
ABSTRACT READY TO EAT SORGHUM BASED FOOD PRODUCT The present disclosure relates to a ready to eat sorghum based food product. The ready to eat sorghum based food product comprises sorghum, at least one protein source, at least one sweetening agent, at least one binding agent, at least one flavouring agent, and at least one edible oil. The present disclosure also provides a process for preparing a ready to eat sorghum based food product. The sorghum based food product can be in the form of a ready to eat nutribar. It contains proteins and vitamins and is capable of providing instant energy. The sorghum based food product has several health benefits, as it is contains a high amount fiber, has low fat content, and is gluten free.

No. of Pages : 24 No. of Claims : 10

(12) PATENT APPLICATION PUBLICATION
(19) INDIA
(22) Date of filing of Application :05/03/2020
(21) Application No.202041009471 A
(43) Publication Date : 05/03/2021

(54) Title of the invention : AN EFFECTIVE DRESSING MATERIAL FOR NEGATIVE PRESSURE WOUND THERAPY

(51) International classification	:H04L0029080000, C07D0417140000, C07D0417060000, C07D0413140000, C07D0263320000	(71)**Name of Applicant :** **1)ROMEMARIYA TECHNOLOGY CONSULTANCY SERVICES PRIVATE LIMITED** Address of Applicant :Myladoor House, Nechipuzhoor Post, Pala, Kottayam, Kerala-686574, India Kerala India
(31) Priority Document No	:NA	(72)**Name of Inventor :** **1)DIGO JOSEPH SEBASTIAN**
(32) Priority Date	:NA	
(33) Name of priority country	:NA	
(86) International Application No	:NA	
Filing Date	:NA	
(87) International Publication No	: NA	
(61) Patent of Addition to Application Number	:NA	
Filing Date	:NA	
(62) Divisional to Application Number	:NA	
Filing Date	:NA	

(57) Abstract :
The present invention relates to the effective dressing material for negative pressure wound treatment (NPWT). More particularly, a biodegradable and natural material to enhance the wound healing process with NPWT.

No. of Pages : 12 No. of Claims : 9

(12) PATENT APPLICATION PUBLICATION
(19) INDIA
(22) Date of filing of Application :05/03/2020
(21) Application No.202041009479 A
(43) Publication Date : 05/03/2021

(54) Title of the invention : PORTABLE˜NPWT€™ DEVICE

(51) International classification	:H04L0029080000, C07D0417140000, C07D0417060000, C07D0413140000, C07D0263320000
(31) Priority Document No	:NA
(32) Priority Date	:NA
(33) Name of priority country	:NA
(86) International Application No	:NA
Filing Date	:NA
(87) International Publication No	: NA
(61) Patent of Addition to Application Number	:NA
Filing Date	:NA
(62) Divisional to Application Number	:NA
Filing Date	:NA

(71)**Name of Applicant :**
1)ROMEMARIYA TECHNOLOGY CONSULTANCY SERVICES PRIVATE LIMITED
Address of Applicant :Myladoor House, Nechipuzhoor Post, Pala, Kottayam, Kerala-686574, India Kerala India
(72)**Name of Inventor :**
1)DIGO JOSEPH SEBASTIAN

(57) Abstract :
This invention is about a portable device involved in negative pressure wound therapy. Negative pressure wound therapy (NPWT) is usually done by creating a sub-atmospheric pressure with the help of larger devices to treat a wound. There are some Portable NPWT devices available in the market, mostly˜SINGLE USE€™ Devices. The major reason behind the single use principle is the small size of device and short life of Vacuum Pump inside the device. Users will dispose the complete device after using it on one or two dressings which last around one week each. This creates a lot of wastage including Electronic waste and plastic waste. An easily replaceable pump module will solve the issue of E-waste and also makes the device a lot more cheaper to use over a longer duration.

No. of Pages : 18 No. of Claims : 8

(12) PATENT APPLICATION PUBLICATION
(21) Application No.202041019512 A
(19) INDIA
(22) Date of filing of Application :08/05/2020
(43) Publication Date : 05/03/2021

(54) Title of the invention : DEVELOPMENT OF COMPUTATIONAL TOOL FOR EARLY DIAGNOSIS OF CARDIOVASCULAR DISEASES ANALYSIS OF DATA FROM OTHERWISE HEALTHY INDIVIDUALS

(51) International classification	:A61B0008080000, G06N0003080000, G06N0003040000, G06T0007000000, A61B0005020000
(31) Priority Document No	:NA
(32) Priority Date	:NA
(33) Name of priority country	:NA
(86) International Application No	:NA
Filing Date	:NA
(87) International Publication No	: NA
(61) Patent of Addition to Application Number	:NA
Filing Date	:NA
(62) Divisional to Application Number	:NA
Filing Date	:NA

(71)**Name of Applicant :**
1)Dr.K.B.Jayanthi
Address of Applicant :Professor and Head / ECE, K.S.Rangasamy College of Technology, Tiruchengode-637215 , Namakkal (Dt) , Tamil Nadu , India . Tamil Nadu India
2)Dr.C.Rajasekaran
3)Ms. S. Sudha
4)Mr. K. Raguvaran
(72)**Name of Inventor :**
1)Dr.K.B.Jayanthi
2)Dr.C.Rajasekaran
3)Ms. S. Sudha
4)Mr. K. Raguvaran

(57) Abstract :
The invention discloses a method for early diagnosis of cardiovascular diseases (CVD) from a developed model such as deep learning model where the model is developed by measuring Intima-Media Thickness (IMT), physical parameters such as age, gender, and biochemical parameters of patients such as cholesterol, sugar level tested using statistical tools and machine learning techniques. The artificial intelligence-based deep learning method is used for measuring intima-media thickness automatically. Convolutional Neural Network (CNN) based on deep neural network architecture is used for measuring IMT. Classifying of CVD based on the measured value of the IMT, the physical, and the biochemical parameters of the patient. Loading the trained deep learning model into the Raspberry Pi 4 model which displays the extracted boundary of the intima-media complex.

No. of Pages : 16 No. of Claims : 12

(12) PATENT APPLICATION PUBLICATION
(21) Application No.202041019739 A
(19) INDIA
(22) Date of filing of Application :10/05/2020
(43) Publication Date : 05/03/2021

(54) Title of the invention : BIO-PHOSPHATE FERTILIZER FORMULATION WITH FULL OF LIFE FOR CROP NUTRITION, CROP PRODUCTIVITY AND SOIL FERTILITY

(51) International classification	:C05F0011080000, C05G0001000000, A01N0063000000, C05F0005000000, A01G0022000000
(31) Priority Document No	:NA
(32) Priority Date	:NA
(33) Name of priority country	:NA
(86) International Application No	:NA
Filing Date	:NA
(87) International Publication No	: NA
(61) Patent of Addition to Application Number	:NA
Filing Date	:NA
(62) Divisional to Application Number	:NA
Filing Date	:NA

(71)**Name of Applicant :**
1)DR. BASAVARAJ GIRENNAVAR
Address of Applicant :Criyagen Agri and Biotech Pvt Ltd .Survey no-71/5, Doddaballapur; Nelamangala state highway no-74,Karim Sonnenahalli-Village, Dodda Tumkur-Post, Madhure-Hobli, Doddaballapura-Tq, Bengaluru Rural, Karnataka, India Karnataka India
(72)**Name of Inventor :**
1)DR. BASAVARAJ GIRENNAVAR
2)AMITHA GANAPATHY B

(57) Abstract :
BIO-PHOSPHATE FERTILIZER FORMULATION WITH FULL OF LIFE FOR CROP NUTRITION, CROP PRODUCTIVITY AND SOIL FERTILITY Abstract: The present invention relates to the Bio-Phosphate fertilizer formulation with full of life for crop nutrition, crop productivity and soil fertility. It particularly relates to the Bio-Phosphate fertilizer formulation which reduces the use of chemical fertilizer and increase nutrients use efficiency and Phosphorus bio-availability for better crop productivity and sustainable agriculture. It specifically relates to the Bio-Phosphate fertilizer formulation containing phosphate in the form of P2O5, microbes especially phosphate solubilizers such as Bacillus spp, Pseudomonas spp, fungi in the form of spores of Aspergillus niger, complex media of amino acids, proteins, salts, minerals and Carbohydrates. The invention also relates to the process for preparation of the Bio-Phosphate fertilizer formulation with full of life for crop nutrition, crop productivity and soil fertility. The invention further relates to the method for management of plant growth or crops by using Bio-Phosphate fertilizer formulation with full of life for crop nutrition, crop productivity and soil fertility.

No. of Pages : 24 No. of Claims : 20

(12) PATENT APPLICATION PUBLICATION
(19) INDIA
(22) Date of filing of Application :10/05/2020
(21) Application No.202041019741 A
(43) Publication Date : 05/03/2021

(54) Title of the invention : BIO-NITROGEN FERTILIZER FORMULATION FOR ORGANIC AND SUSTAINABLE FARMING

(51) International classification	:C05F0011080000, C05G0001000000, A01N0063000000, A01C0021000000, A01G0022000000
(31) Priority Document No	:NA
(32) Priority Date	:NA
(33) Name of priority country	:NA
(86) International Application No	:NA
Filing Date	:NA
(87) International Publication No	: NA
(61) Patent of Addition to Application Number	:NA
Filing Date	:NA
(62) Divisional to Application Number	:NA
Filing Date	:NA

(71)**Name of Applicant :**
1)DR. BASAVARAJ GIRENNAVAR
Address of Applicant :Criyagen Agri and Biotech Pvt Ltd .Survey no-71/5, Doddaballapur; Nelamangala state highway no-74,Karim Sonnenahalli-Village, Dodda Tumkur-Post, Madhure-Hobli, Doddaballapura-Tq, Bengaluru Rural Karnataka India
(72)**Name of Inventor :**
1)DR. BASAVARAJ GIRENNAVAR
2)AMITHA GANAPATHY B

(57) Abstract :
BIO-NITROGEN FERTILIZER FORMULATION FOR ORGANIC AND SUSTAINABLE FARMING The present invention relates to the Bio-Nitrogen fertilizer formulation to fix the nitrogen from multiple sources for organic and sustainable farming. It particularly relates to the Bio-Nitrogen fertilizer formulation which reduces the use of chemical fertilizer and increase nutrients use efficiency and nitrogen bio-availability for better crop productivity and sustainable agriculture along with increasing the crop nutrition, crop productivity and soil fertility. It specifically relates to the Bio-Nitrogen fertilizer formulation containing nitrogen fixers from multiple sources such as Azotobacter sp., Azospirillum sp., Rhizobium sp., and Gluconacetobater diazotrophicus. The invention also relates to the process for preparation of the Bio-Nitrogen fertilizer formulation to fix the nitrogen from multiple sources for organic and sustainable farming. The invention further relates to the method for management of plant growth or crops by using Bio-Nitrogen fertilizer formulation with full of life for better crop productivity and sustainable agriculture along with increasing the crop nutrition, crop productivity and soil fertility.

No. of Pages : 26 No. of Claims : 20

(12) PATENT APPLICATION PUBLICATION
(21) Application No.202041023911 A
(19) INDIA
(22) Date of filing of Application :08/06/2020
(43) Publication Date : 05/03/2021

(54) Title of the invention : PROCESSING OF MULTIMEDIA CONTENT ON AN EDGE DEVICE

(51) International classification	:H04L0029060000, H04N0021234300, H04N0021234000, H04N0021262000, H04N0021647000	(71)**Name of Applicant :** **1)Myelin Foundry Private Limited** Address of Applicant :210-P, #88, Borewell Road, Opposite Whitefield PO, Whitefield, Bengaluru 560066, Karnataka, India Karnataka India
(31) Priority Document No	:NA	(72)**Name of Inventor :**
(32) Priority Date	:NA	**1)Ganesh Suryanarayanan**
(33) Name of priority country	:NA	**2)Anusha Rammohan**
(86) International Application No	:NA	**3)Vasant Jain**
Filing Date	:NA	**4)Vishwanath Deshpande**
(87) International Publication No	: NA	
(61) Patent of Addition to Application Number	:NA	
Filing Date	:NA	
(62) Divisional to Application Number	:NA	
Filing Date	:NA	

(57) Abstract :
A system (100) for context driven processing of multimedia content (402) on an edge device (104) is presented. The system (100) includes an acquisition subsystem (404). Furthermore, the system (100) includes a processing subsystem (406) that includes a context aware artificial intelligence platform (408) configured to generate context characteristics based on user characteristics, edge device characteristics, and multimedia characteristics, retrieve a model (324, 412) based on the context characteristics, identify processing steps based on the model (324, 412), the context characteristics, or both, where the processing steps are used to perform context driven processing of input multimedia content (402) on the edge device (104), select, based on the model (324, 412), the context characteristics, or both, one or more target processing units (418, 420, 422, 424, 426) to perform the processing steps, and execute the processing steps on the selected target processing units (418, 420, 422, 424, 426) to generate improved output multimedia content. The system (100) includes an interface unit (428, 430) configured to provide, on the edge device (104), the improved output multimedia content.

No. of Pages : 65 No. of Claims : 26

(12) PATENT APPLICATION PUBLICATION
(19) INDIA
(22) Date of filing of Application :11/06/2020
(21) Application No.202041024472 A
(43) Publication Date : 05/03/2021

(54) Title of the invention : DECOLOURING AND DYE REMOVAL AGENT

(51) International classification	:B01J0035000000, C22C0038500000, B82Y0040000000, C01B0021064000, C22C0038060000
(31) Priority Document No	:NA
(32) Priority Date	:NA
(33) Name of priority country	:NA
(86) International Application No	:NA
Filing Date	:NA
(87) International Publication No	: NA
(61) Patent of Addition to Application Number	:NA
Filing Date	:NA
(62) Divisional to Application Number	:NA
Filing Date	:NA

(71)**Name of Applicant :**
1)KARUNYA INSTITUTE OT TECHNOLOGY AND SCIENCES
Address of Applicant :KARUNYA NAGAR, COIMBATORE, TAMIL NADU 641114, INDIA Tamil Nadu India
(72)**Name of Inventor :**
1)Sakunthala Ayyasamy
2). B. Vidhya Bhojan
3)Swaminathan Rajesh
4)NandhaKumar Raju
5)Manjula Raveendranatha Shenoy

(57) Abstract :
Decolouring and dye removal agent relates to an iron oxide- hexagonal Boron nitride composite (a-Fe2O3 / (x) hBN, x = 1/5/10 wt %) prepared by simple chemical method as a wide spectrum decoloring and dye removal agent . The composites were characterized by XRD, FTIR and SEM studies. The composite a-Fe2O3 / hBN with 5 wt % of hBN (FB2) showed the better efficiency of 91% for methylene blue (MB) degradation with a rate constant of 5.03 — 10-4s-1. This was 3.3 times higher than the rate constant observed for the MB degradation using bare hematite. The composites with 1, 5 and 10 wt % of hBN were found to have a lower band gap of 1.83, 1.56 and 1.60 eV, respectively, when compared to the band gap of bare hematite (2.02 eV). The material after photo catalysis process was retrieved by simple sedimentation process and reused for four cycles showing no loss in degradation efficiency. The as prepared composite material have application in recycling and reuse of water in textile industries

No. of Pages : 19 No. of Claims : 9

(12) PATENT APPLICATION PUBLICATION
(21) Application No.202041044283 A
(19) INDIA
(22) Date of filing of Application :12/10/2020
(43) Publication Date : 05/03/2021

(54) Title of the invention : DESIGN AND DEVELOPMENT OF CONTACTLESS THERMAL SCANNER

(51) International classification	:G16H0050800000, A61B0005010000, C07K0016100000, G06F0016245700, G06F0021560000
(31) Priority Document No	:NA
(32) Priority Date	:NA
(33) Name of priority country	:NA
(86) International Application No	:NA
Filing Date	:NA
(87) International Publication No	: NA
(61) Patent of Addition to Application Number	:NA
Filing Date	:NA
(62) Divisional to Application Number	:NA
Filing Date	:NA

(71)**Name of Applicant :**
1)RAJASHEKAR C BIRADAR
Address of Applicant :GROUND FLOOR, 08, KATTIGENAHALLI, RUKMANI KNOWLEDGE PARK, REVA UNIVERSITY, BANGALORE, KARNATAKA, INDIA 560064 Karnataka India
2)KOUAME YANN OLIVIER A
3)MANJULA R BHARAMAGOUDRA
4)GEETA D
5)KARTIK CHOLACHGUDDA
6)ARYALEKSHMI B N
(72)**Name of Inventor :**
1)RAJASHEKAR C BIRADAR
2)KOUAME YANN OLIVIER A
3)MANJULA R BHARAMAGOUDRA
4)GEETA D
5)KARTIK CHOLACHGUDDA
6)ARYALEKSHMI B N

(57) Abstract :
Recently, a pandemic crisis has happened. A virus named COV1D-19 has been spread worldwide, starting from China, precisely in WUHAN. Due to the spread of the disease, countries worldwide have been locked down to stop spreading the virus. As prevention measures, many pieces of advice have been given to the population. Somehow, it's difficult to control or stop the spread of the virus since the symptoms start 14 days after infection. Therefore, even someone who looks healthy might be infected without knowing it himself. One way to check the possible sign of COVID is body temperature. Checking people's temperature should be done safely since one who is trying to take the body temperature might get infected too. The use of infrared thermometers is advisable because it allows us to take people's temperature while keeping a safe distance. This preventive solution is acceptable for fewer people. However, it would be difficult to do so with many people, and the process will be tedious and time-consuming. As a solution, we are proposing a device, which can automate this process. The device will be installed, preferably near the gates, where it can check people's temperatures, capture photos, and send an alert to the administrators. The system will also be useftil after the lockdown is released as Schools, Universities will reopen, and they'll have to manage many students at a time.

No. of Pages : 8 No. of Claims : 4

(12) PATENT APPLICATION PUBLICATION
(21) Application No.202041045361 A
(19) INDIA
(22) Date of filing of Application :19/10/2020
(43) Publication Date : 05/03/2021

(54) Title of the invention : ECONOMIC ASPECT DESIGNING OF PROTOTYPE LABORATORY MULTI PHASE INDUCTION MACHINE AND VALIDATION OF

(51) International classification	:H02K0017120000, H02P0023260000, H02K0003280000, H02P0023140000, H02P0027160000
(31) Priority Document No	:NA
(32) Priority Date	:NA
(33) Name of priority country	:NA
(86) International Application No	:NA
Filing Date	:NA
(87) International Publication No	: NA
(61) Patent of Addition to Application Number	:NA
Filing Date	:NA
(62) Divisional to Application Number	:NA
Filing Date	:NA

(71)**Name of Applicant :**
1) BATCHALAKURI JYOTHI
Address of Applicant :KLEF DEEMED TO BE UNIVERSITY, GREEN FIELDS, VADDESWARAM, GUNTUR, ANDHRA PRADESH, INDIA, 522502 Andhra Pradesh India
2)KADAPA HARINADHA REDDY
(72)**Name of Inventor :**
1)Dr. K. Harinadha Reddy

(57) Abstract :
Modern world is very likely depending on the electrical drives in all most many field of applications. Now the main idea of proposal to fabricate higher phase Induction Motor (IM) with existing lower phase IM rigid construction. Also in a preset proposal more emphasize has been made on the following i) phase winding designing, ii) performance analysis, iii) economic aspect analysis AC machine, Induction motor is used in every day applications extensively, due to its unique features like rugged, reliable and cost-effective motor. By means of enhanced phase number, the magnitude can be diminished and the frequency of torque pulsations can be amplified in the drive. By the High Phase Order concept, high power rated inverters are accomplished with existing power semiconductor devices. Usually efficiency and power factor of the motor are improved by excitation with respect to load and speed. The Efficiency optimization plays a vital role not only in electrical systems, but also it obliges the systems to acquire favourable increase in terms of the amount of money and decrease in global warming. An ample of literature describes the necessity of multiphase machine drives over the conventional drives. Initiation has been made for implementation of the multiphase machine drives, a 5-0 machine drive has been aimed and developed new process of concern out of the other high order phase machines, with low economic cost, efficient and reliable. In this work, a low cost 1.5 kw traditional induction motor considered and redesign the multiphase motor {Five phase machine) and described the performance analysis of proposed motor. Simulation and experimental results are | compared and tabulated including its phase loss conditions.

No. of Pages : 14 No. of Claims : 6

(12) PATENT APPLICATION PUBLICATION
(21) Application No.202041047664 A
(19) INDIA
(22) Date of filing of Application :01/11/2020
(43) Publication Date : 05/03/2021

(54) Title of the invention : CHILDREN & ADULTS IMMUNIZATION AND HEALTH IMPROVEMENT REMINDER SYSTEM USING PRE-RECORDED AUTO CALLS, SMS & MANUAL CALLS.

(51) International classification	:H04L0012580000, G06Q0010100000, H04W0004140000, H04W0004160000, H04W0004029000	(71)**Name of Applicant :** **1)ABDUL SUBAAN** Address of Applicant :#422, First Floor, 10th Main, Vivek Nagar, Bangalore Karnataka India (72)**Name of Inventor :** **1)ABDUL SUBAAN**
(31) Priority Document No	:NA	
(32) Priority Date	:NA	
(33) Name of priority country	:NA	
(86) International Application No	:NA	
Filing Date	:NA	
(87) International Publication No	: NA	
(61) Patent of Addition to Application Number	:NA	
Filing Date	:NA	
(62) Divisional to Application Number	:NA	
Filing Date	:NA	

(57) Abstract :
Children & adults immunization and health improvement reminder system is a custom developed software application which uses the following methods as a reminder; automatic pre-recorded calls, SMS, email, other messaging app through messages and manual calls. Reminder system uses internet, mobile network and mobile phones or electronic devices to alert the target person (the beneficiary) on upcoming or due immunization on a pre-determined or an event triggered date and time. The system is a software application connected with information source systems, security interfaces, third party SMS gateways and mobile network interfaces.

No. of Pages : 13 No. of Claims : 16

(12) PATENT APPLICATION PUBLICATION
(21) Application No.202041050853 A
(19) INDIA
(22) Date of filing of Application :23/11/2020
(43) Publication Date : 05/03/2021

(54) Title of the invention : INTELLIGENT MUSHROOM MONITORING SYSTEM

(51) International classification	:H04L0029080000, A23L0031000000, A63B0071060000, F24C0007080000, A23L0035000000	(71)**Name of Applicant :** **1)Dr.PRAVINTHRAJA SUTHAKAR** Address of Applicant :PRESIDENCY UNIVERSITY, BANGALORE. Karnataka India **2)Dr.C.KALAIARASAN** **3)Mr.ROJER ROZARIO**
(31) Priority Document No	:NA	
(32) Priority Date	:NA	(72)**Name of Inventor :**
(33) Name of priority country	:NA	**1)Dr.PRAVINTHRAJA SUTHAKAR**
(86) International Application No	:NA	**2)Dr.C.KALAIARASAN**
Filing Date	:NA	**3)Mr.ROJER ROZARIO**
(87) International Publication No	: NA	
(61) Patent of Addition to Application Number	:NA	
Filing Date	:NA	
(62) Divisional to Application Number	:NA	
Filing Date	:NA	

(57) Abstract :
Mushrooms are classified as vegetables in the food world, but they are actually fungi. Although they are not vegetables, mushrooms provide several important nutrients and they have a very important part in the food market. This project mainly focuses of the monitoring of the mushroom farms. The sensors are placed at specific regions of the farm, which will monitor the status. The control unit is setup with some basic parameters such as temperature, humidity and gas content that is required for the cultivation when the threshold varies the control unit will trigger the actuators. An intelligent app is designed to check the status of the farm by the user which will be connected with the control unit through a server, The app will be a used by the cultivator, where in the app, the status of the farm will be displayed. Once the actuators are triggered the users will be notified with the help of SMS.

No. of Pages : 8 No. of Claims : 3

(12) PATENT APPLICATION PUBLICATION
(21) Application No.202041054052 A
(19) INDIA
(22) Date of filing of Application :11/12/2020
(43) Publication Date : 05/03/2021

(54) Title of the invention : A SYSTEM FOR HUMAN FACE IDENTIFICATION AND A METHOD THEREOF

(51) International classification	:G06K0009000000, G06F0003010000, G06F0021320000, G06K0009620000, G06K0009200000	(71)**Name of Applicant :** **1)SRM Institute of Science and Technology** Address of Applicant :Kattankulathur Tamil Nadu Chennai INDIA 603203 Tamil Nadu India (72)**Name of Inventor :** **1)Anuj Rai** **2)Ushasukhanya.S**
(31) Priority Document No	:NA	
(32) Priority Date	:NA	
(33) Name of priority country	:NA	
(86) International Application No	:PCT//	
Filing Date	:01/01/1900	
(87) International Publication No	: NA	
(61) Patent of Addition to Application Number	:NA	
Filing Date	:NA	
(62) Divisional to Application Number	:NA	
Filing Date	:NA	

(57) Abstract :
The present disclosure relates to the field of identification and the system (100) for human face identification comprises a repository (102), an image capturing module (104), an image processing module (106), a crawler and extractor (108) and a face identification module (110). The repository (102) is configured to store a list of pre-stored images. The image capturing module (104) is configured to capture at least one image of a user. The image processing module (106) is configured to process the captured image. The crawler and extractor (108) is configured to cooperate with the repository (102) and the image processing module (106) to crawl through the list and extract the pre-stored image based on the processed image. The face identification module (110) is configured to cooperate with the image processing module (106) to identify the user€™s face based on the processed image and the extracted image.

No. of Pages : 17 No. of Claims : 4

(12) PATENT APPLICATION PUBLICATION
(21) Application No.202041055678 A
(19) INDIA
(22) Date of filing of Application :22/12/2020
(43) Publication Date : 05/03/2021

(54) Title of the invention : EASY WEAR DRESSES

(51) International classification	:A41D0013000000, A41B0009120000, A41D0001220000, G09F0027000000, A41D0001000000	(71)**Name of Applicant :** **1)C.MOGAN** Address of Applicant :15/5, 6TH STREET, RAJAJI NAGAR, VILLIVAKKAM, CHENNAI - 600049, TAMIL NADU, INDIA. Tamil Nadu India
(31) Priority Document No	:NA	(72)**Name of Inventor :** **1)C.MOGAN**
(32) Priority Date	:NA	
(33) Name of priority country	:NA	
(86) International Application No	:NA	
Filing Date	:NA	
(87) International Publication No	: NA	
(61) Patent of Addition to Application Number	:NA	
Filing Date	:NA	
(62) Divisional to Application Number	:NA	
Filing Date	:NA	

(57) Abstract :
7. Abstract: a) Easy wear dresses : The product is a Revolution on modern age of Textile . This product is a combination of a pant and a traditional wear. This prevents accidents, exposure of body, fear of wearing traditional dresses and makes it helpful for people who Love to wear traditional Style Dress and also for people who are Learning Dance. The product will be more comfortable and motivates People to take part in Traditional activities without fear and helps them to satisfy their day to day life.

No. of Pages : 7 No. of Claims : 6

(12) PATENT APPLICATION PUBLICATION
(21) Application No.202141003688 A
(19) INDIA
(22) Date of filing of Application :27/01/2021
(43) Publication Date : 05/03/2021

(54) Title of the invention : A PREFORM, BOTTLE AND CONTAINER WITH MODIFIED NECK GEOMETRY FOR PACKAGING OF SUBSTANCES

(51) International classification	:B29L0031000000, A61Q0005020000, B29C0049060000, B29B0011140000, B29B0011080000	(71)**Name of Applicant :** **1)MANJUSHREE TECHNOPACK LIMITED** Address of Applicant :2nd Floor, MBH Tech Park, 46, 47, Hosur Rd, Electronic City Phase II, Bengaluru, Karnataka-560100, India Karnataka India
(31) Priority Document No	:NA	(72)**Name of Inventor :**
(32) Priority Date	:NA	**1)NAVNEET YADAV**
(33) Name of priority country	:NA	**2)GOUTAM PANDA**
(86) International Application No	:NA	
Filing Date	:NA	
(87) International Publication No	: NA	
(61) Patent of Addition to Application Number	:NA	
Filing Date	:NA	
(62) Divisional to Application Number	:NA	
Filing Date	:NA	

(57) Abstract :
The present disclosure provides a preform, bottle and container with a modified neck portion of the including a Neck Support Ring (NSR) having a plurality of discontinuous segmental protrusions arranged in the shape of star and a Tamper Evident Ring (TER) with or without disjointed segments, in option. Grooves or intrusions chiseled across the spaces in the neck portion provide for a chequered or tessellated appearance that can be used alone or in conjunction thereof. In addition to a unique shelf-appeal, the several geometric modifications of neck portion facilitate optimization of the weight of the NSR and the wall thickness of the neck and can be used for packaging of substances including all kinds of beverages whether alcoholic or non-alcoholic, water, oils whether edible or non-edible, shampoo, conditioners, and other personal care products, several home care products, dairy products and as secondary jars for several food and non-food items. Fig. 2

No. of Pages : 17 No. of Claims : 12

(12) PATENT APPLICATION PUBLICATION
(21) Application No.202141006192 A
(19) INDIA
(22) Date of filing of Application :14/02/2021
(43) Publication Date : 05/03/2021

(54) Title of the invention : BELT PULLEY WITH SELF-COOLING MECHANISM

(51) International classification	:F16H0055360000, F16H0055400000, B60B0021060000, F16H0007020000, F16H0055170000
(31) Priority Document No	:NA
(32) Priority Date	:NA
(33) Name of priority country	:NA
(86) International Application No	:NA
Filing Date	:NA
(87) International Publication No	: NA
(61) Patent of Addition to Application Number	:NA
Filing Date	:NA
(62) Divisional to Application Number	:NA
Filing Date	:NA

(71)**Name of Applicant :**
1)Surya Bhavani Chalamkuri
Address of Applicant :Block No F, Flat No G04, Ramky One Marvel, Gajularamaram Road, Prakasam Panthulu Nagar, Hyderabad-500055 Telangana, India Telangana India
(72)**Name of Inventor :**
1)Surya Bhavani Chalamkuri
2)Motupally Vijay Krishna

(57) Abstract :
ABSTRACT BELT PULLEY WITH SELF-COOLING MECHANISM The present invention relates to a belt pulley with self-cooling mechanism. The belt pulley (100) comprises a rim (102) with at least one groove (104) on the outer side of the rim (102), a hub (106) and at least one hub (106) connecting the rim (102) and hub (106). The belt pulley 100 has at least one opening (hole in casting) 110 in the base of the groove 104. The openings (holes in casting) 110 present in the base of the groove 104 help in dissipating the heat generated. Figure of Abstract: Fig. 1

No. of Pages : 15 No. of Claims : 8

(12) PATENT APPLICATION PUBLICATION
(21) Application No.202141006261 A
(19) INDIA
(22) Date of filing of Application :15/02/2021
(43) Publication Date : 05/03/2021

(54) Title of the invention : 3D PROTECTIVE MASK BASED WATER QUALITY MONITORING SYSTEM POWERED BY SOLAR WITH GOOD DETECTION

(51) International classification	:G01N0033180000, H04L0029080000, G08C0017020000, H04W0004140000, A01G0025000000
(31) Priority Document No	:NA
(32) Priority Date	:NA
(33) Name of priority country	:NA
(86) International Application No	:NA
Filing Date	:NA
(87) International Publication No	: NA
(61) Patent of Addition to Application Number	:NA
Filing Date	:NA
(62) Divisional to Application Number	:NA
Filing Date	:NA

(71)**Name of Applicant :**
1) Mr. A. NAGESWAR RAO
Address of Applicant :RESEARCH SCHOLAR, DEPARTMENT OF ECE, UNIVERSITY COLLEGE OF ENGINEERING OSMANIA UNIVERSITY, HYDERABAD, TELANGANA, INDIA, 500007. Telangana India
2)Dr. B. RAJENDRA NAIK
3)Mr. G. KARTHIK REDDY
4)Dr. L. NIRMALA DEVI
(72)**Name of Inventor :**
1) Mr. A. NAGESWAR RAO
2)Dr. B. RAJENDRA NAIK
3)Mr. G. KARTHIK REDDY
4)Dr. L. NIRMALA DEVI

(57) Abstract :
We present a low-cost internet-of-things enabled drinking water distribution system powered by solar panel for real-time monitoring and contamination detection. The system consists of several sensors to measure the physicochemical parameters of water quality such as pH value, the turbidity in the water, oxidation-reduction potential (ORP) value, and the surrounding atmosphere's temperature. The sensors and their signal conditioning circuits are connected to the MSP432 microcontroller responsible for processing the water parameters. The controller sends AT commands to the GPRS module through the UART serial port, which controls its data transmission. The S1MCOM 808 GPRS module is utilized for communication between the controller and the web-based supervision system (dashboard). The integration of solar panel with its design power module, sensors with its signal conditioning circuits, controller, and the GPRS module are considered as one wireless device (WD). We deployed three WD's in different locations to sense, collect, process, and transfer physiochemical parameter values to the Amazon cloud server. The system was developed for testing water samples, and the data uploaded over the cloud is analyzed. The system also provides alerts and early warnings of different WD's, which are displayed on the dashboard and also sent through short message service (SMS) for the registered user when there is a deviation of water quality parameters from the predefined set of standard values.

No. of Pages : 12 No. of Claims : 5

(12) PATENT APPLICATION PUBLICATION
(19) INDIA
(22) Date of filing of Application :22/02/2021
(21) Application No.202141007289 A
(43) Publication Date : 05/03/2021

(54) Title of the invention : DISTRESS SOUND SOURCE LOCATION SYSTEM FOR SWARM DRONES BY DIRECTION OF ARRIVAL METHOD

(51) International classification	:B64C0039020000, G08G0005000000, G05D0001100000, G08B0021220000, H04R0003000000
(31) Priority Document No	:NA
(32) Priority Date	:NA
(33) Name of priority country	:NA
(86) International Application No	:NA
Filing Date	:NA
(87) International Publication No	: NA
(61) Patent of Addition to Application Number	:NA
Filing Date	:NA
(62) Divisional to Application Number	:NA
Filing Date	:NA

(71)**Name of Applicant :**
1)Kishore Abishek
Address of Applicant :131/2, Emerald Flats, Thirumangalam, Anna Nagar West, Chennai - 600040, Tamil nadu. Tamil Nadu India
2)R.Partheepan
3)Gurukumar Lokku
4)K.Manjunath
5)Dr.G.N.Kodandaramaiah
6)K.Kannaiah
7)Dr S. Prabakeran
8)Dr.G.Gunasekaran
9)Dr.V.Janakiraman
10)Dr.V.Manonmani
11)Dr.B.Ben Sujitha
12)Dr. S.Balaji
13)S.Santhosh
14)Mr.N.Nandakumar
15)L. SreeVidya
16)B.S.Liya
(72)**Name of Inventor :**
1)Kishore Abishek
2)R.Partheepan
3)Gurukumar Lokku
4)K.Manjunath
5)Dr.G.N.Kodandaramaiah
6)K.Kannaiah
7)Dr S. Prabakeran
8)Dr.G.Gunasekaran
9)Dr.V.Janakiraman
10)Dr.V.Manonmani
11)Dr.B.Ben Sujitha
12)Dr. S.Balaji
13)S.Santhosh
14)Mr.N.Nandakumar
15)L. SreeVidya
16)B.S.Liya

(57) Abstract :
1) A swarm of drones (group of drones) each having a mounted sound sensor and arranging themselves in regular polygonal shape with one drone at each vertices of the polygon to identify the direction of arrival of the distress sound signal, 2) As claimed in Claim 1, the size of the virtual polygon can he changed when drones rearrange themselves by moving away from each other.

No. of Pages : 6 No. of Claims : 3

(12) PATENT APPLICATION PUBLICATION
(21) Application No.202141007312 A
(19) INDIA
(22) Date of filing of Application :22/02/2021
(43) Publication Date : 05/03/2021

(54) Title of the invention : DEVELOPMENT OF ICE CREAM INCORPORATED WITH MONK FRUIT POWDER

(51) International classification	:A23L0027300000, A23L0027120000, A23L0019000000, A23L0033000000, A23G0009320000
(31) Priority Document No	:NA
(32) Priority Date	:NA
(33) Name of priority country	:NA
(86) International Application No	:NA
Filing Date	:NA
(87) International Publication No	: NA
(61) Patent of Addition to Application Number	:NA
Filing Date	:NA
(62) Divisional to Application Number	:NA
Filing Date	:NA

(71)**Name of Applicant :**
1)Mr.Pravin.J.K
Address of Applicant :303 A-2, Sai Kripa appt, Thadagam road, R.S.Puram, Coimbatore-641002. Tamil Nadu India
(72)**Name of Inventor :**
1)Mr PravinJ.K
2)Mr Siddharth.S
3)Mr Veerapandi.L
4)Mr Buvanesh.P

(57) Abstract :
ABSTRACT DEVELOPMENT OF ICE CREAM INCORPORATED WITH MONK FRUIT POWDER Ice creams are one of the most popular desserts. A large variety of ice creams are produced in different flavours by many multi-national companies. Ice cream is a sweetened frozen food consumed as a dessert or snack, also it is rich in proteins and calories. The main objective of this research is to replace monk fruit instead of sugar. Monk fruit is also called as luo han guo or swingle. It looks like a small guard, grows on vine. Fresh monk fruit spoils rather quickly, traditionally people used monk fruit in herbal medicines. The fruit extract contains substance like mogrosides, which are intensely sweet. Monk fruit has zero calories which helps people on diet that restricts a persons calorie intake. Zero sugar which means consuming it will not affect blood sugar levels. Zero carbohydrate which makes it ideal for people on low-carb and keto diets. It also contains many antioxidant properties. Adding monk fruit powder makes it a value added food product.

No. of Pages : 9 No. of Claims : 8

(12) PATENT APPLICATION PUBLICATION
(21) Application No.202141007336 A
(19) INDIA
(22) Date of filing of Application :22/02/2021
(43) Publication Date : 05/03/2021

(54) Title of the invention : MANUFACTURE OF RED MUD AND WASTE FOUNDRY SAND BASED SUSTAINABLE BRICKS

(51) International classification	:C04B0033132000, C04B0028020000, B09B0003000000, C04B0018040000, C04B0033135000
(31) Priority Document No	:NA
(32) Priority Date	:NA
(33) Name of priority country	:NA
(86) International Application No	:NA
Filing Date	:NA
(87) International Publication No	: NA
(61) Patent of Addition to Application Number	:NA
Filing Date	:NA
(62) Divisional to Application Number	:NA
Filing Date	:NA

(71)**Name of Applicant :**
1)M. BEULAH
Address of Applicant :SCHOOL OF ENGINEERING AND TECHNOLOGY, CHRIST (DEEMED TO BE UNIVERSITY), KENGERI CAMPUS, KANMANIKE KUMBALGODU, MYSORE ROAD, BANGALORE - 560098. Karnataka India
2)PRATAP KUMAR .J
3)M R SUDHIR
(72)**Name of Inventor :**
1)M. BEULAH
2)PRATAP KUMAR .J
3)M R SUDHIR

(57) Abstract :
The present invention is a unique eco-friendly construction material Manufacture of Red Mud and Waste Foundry Sand Based Sustainable Brickswhich symbolizes the unceasing reality of innovations in the construction industry. The invention relates to using of Red mud and Waste foundry sand for producing bricks suitable for structural walls. The objective of the present invention is to provide a sustainable brick which is a value addition building material to the construction industry. The present invention presents a method of preparing bricks using Red mud (RM) and waste foundry sand (WFS) without the use of clay or cement and the firing process. The bricks produced are of comparable strength to the standard brick and are also more economical as a walling material.The method involves a way of preparing these sustainable bricks in ambient temperatures, eliminating the need for Kiln firing them. The invention therefore is designed to circumvent the conventional use of depleting natural resources such as clay. The brick produced achieves the dual purpose of the reduction of carbon foot prints and the effective usage of hazardous waste materials. The novel feature of the invention is the blending of different types of industrial byproducts in brick production at ambient temperature improving the structural properties of the bricks. Such bricks enhance structural durability and reduce energy bills.

No. of Pages : 5 No. of Claims : 6

(12) PATENT APPLICATION PUBLICATION
(21) Application No.202141007676 A
(19) INDIA
(22) Date of filing of Application :24/02/2021
(43) Publication Date : 05/03/2021

(54) Title of the invention : A SMART PUMPING MOTOR WITH INBUILT MAINTAINANCE MECHANISMS

(51) International classification	:A61J0007040000, H04N0021472000, H04W0004600000, H02J0003000000, H04W0008240000
(31) Priority Document No	:NA
(32) Priority Date	:NA
(33) Name of priority country	:NA
(86) International Application No	:NA
Filing Date	:NA
(87) International Publication No	: NA
(61) Patent of Addition to Application Number	:NA
Filing Date	:NA
(62) Divisional to Application Number	:NA
Filing Date	:NA

(71)**Name of Applicant :**
1)Dr. K. K. RAMASAMY
Address of Applicant :PROF. MECHANICAL CUM DIRECTOR ADMINISTRATION, PAAVAI ENGINEERING COLLEGE, NH 44, PANCHAL, NAMAKKAL 637018, TAMILNADU Tamil Nadu India
2)Mr. P.SABARI
3)Dr.SATYANARAYANA INDIGIBILLI
4)SUSHEELA KATTULA
5)ERIKI ANANDA KUMAR
6)Dr. JAYAKIRAN REDDY E
7)Dr. GONDI KONDA REDDY
8)Dr. T.D.SUNDARANATH
9)Dr. KIRAN KUMAR M
10)Dr. B SRINIVASULU
(72)**Name of Inventor :**
1)Dr. JAYAKIRAN REDDY E
2)Dr. GONDI KONDA REDDY
3)Dr. T.D.SUNDARANATH
4)Dr.SATYANARAYANA INDIGIBILLI
5)SUSHEELA KATTULA
6)ERIKI ANANDA KUMAR
7)Dr. KIRAN KUMAR M
8)Dr. K. K. RAMASAMY
9)Mr. P.SABARI
10)Dr. B SRINIVASULU

(57) Abstract :
A smart pumping motor with inbuilt maintenance mechanisms are the proposed invention that aims at troubleshooting and maintaining the motors that are used for pumping easy and a cost-effective manner. It is implementing with the help of a black box that records the condition of the motor from time to time. There is also a mechanism to record the usage of electricity by those particular electrical appliances along with information€™s related to the usage of the motor per day, week, month, and yearly basis. The alert mechanism will send messages to the pre-registered mobile number of the user at regular intervals.

No. of Pages : 15 No. of Claims : 6

(12) PATENT APPLICATION PUBLICATION
(21) Application No.202141007681 A
(19) INDIA
(22) Date of filing of Application :24/02/2021
(43) Publication Date : 05/03/2021

(54) Title of the invention : A METHOD OF MODIFIED CEMENT MORTAR STYRENE-ACRYLIC EMULSION AND PREPARATION

(51) International classification	:C04B0028020000, C04B0028040000, C04B0024260000, C09D0125140000, C04B0111000000
(31) Priority Document No	:NA
(32) Priority Date	:NA
(33) Name of priority country	:NA
(86) International Application No	:NA
Filing Date	:NA
(87) International Publication No	: NA
(61) Patent of Addition to Application Number	:NA
Filing Date	:NA
(62) Divisional to Application Number	:NA
Filing Date	:NA

(71)**Name of Applicant :**
1)Mr. S.RAGUNATH
Address of Applicant :ASSISTANT PROFESSOR, DEPARTMENT OF CIVIL ENGINEERING, JANSONS INSTITUTE OF TECHNOLOGY, KARUMATHAMPATTI, COIMBATORE, TAMIL NADU, INDIA 641659. Tamil Nadu India
2)Dr. A. VIJAYAKUMAR
3)Dr. M.LENIN SUNDAR
4)Dr. ALEX RAJESH. A
5)Dr. SARGUNAN. K
6)Dr. PRASANTHNI. P
7)Dr. JAGADEESAN R
8)Dr. KALAIVANI M
(72)**Name of Inventor :**
1)Mr. S.RAGUNATH
2)Dr. A. VIJAYAKUMAR
3)Dr. M.LENIN SUNDAR
4)Dr. ALEX RAJESH. A
5)Dr. SARGUNAN. K
6)Dr. PRASANTHNI. P
7)Dr. JAGADEESAN R
8)Dr. KALAIVANI M

(57) Abstract :
ABSTRACT A METHOD OF MODIFIED CEMENT MORTAR STYRENE-ACRYLIC EMULSION AND PREPARATION This invention describes how the properties of plain cement concrete can be improved by making use of epoxy styrene acrylic polymer. Most of the water-based polymer systems re-emulsify in alkaline conditions. To overcome this problem an epoxy emulsion-based polymer system is developed. The cycle permits developing of composite polymer concrete microstructures on a nanoscale, which can evade the negative impacts of the polymer - admixture-concrete collaborations on shape and dispersion of the concrete hydrate gem and on the change zones between cementious binder matrix and aggregates. This modified cement concrete contains two types of binder: the system based on hydraulic cement and polymer system. Styrene acrylic polymer is added in different percentages to plain cement concrete and its optimum dosage with respect to flow and strength characteristics are found.

No. of Pages : 26 No. of Claims : 7

(12) PATENT APPLICATION PUBLICATION
(21) Application No.202141007683 A
(19) INDIA
(22) Date of filing of Application :24/02/2021
(43) Publication Date : 05/03/2021

(54) Title of the invention : PINEAPPLE FIBER COMPOSITE AS A REPLACEMENT FOR ASBESTOS IN BRAKE PAD MANUFACTURE

(51) International classification	:F16D0069020000, C08K0007120000, C04B0014400000, C08L0001020000, A01D0045000000	(71)**Name of Applicant :** **1)Dr.S.SATHEES KUMAR** Address of Applicant :DEPARTMENT OF MECHANICAL ENGINEERING, CMR INSTITUTE OF TECHNOLOGY, KANDLAKOYA VILLAGE, MEDCHAL RD, HYDERABAD, TELANGANA, INDIA 501401. Telangana India
(31) Priority Document No	:NA	**2)Dr.C.DHARMARAJA**
(32) Priority Date	:NA	**3)Dr.V.MUGESH RAJA**
(33) Name of priority country	:NA	**4)Dr.S.SUDHAGAR**
(86) International Application No	:NA	(72)**Name of Inventor :**
Filing Date	:NA	**1)Dr.S.SATHEES KUMAR**
(87) International Publication No	: NA	**2)Dr.C.DHARMARAJA**
(61) Patent of Addition to Application Number	:NA	**3)Dr.V.MUGESH RAJA**
Filing Date	:NA	**4)Dr.S.SUDHAGAR**
(62) Divisional to Application Number	:NA	
Filing Date	:NA	

(57) Abstract :
ABSTRACT PINEAPPLE FIBER COMPOSITE AS A REPLACEMENT FOR ASBESTOS IN BRAKE PAD MANUFACTURE In this invention it comes to realize that Pineapple leaf fiber have great mechanical properties when contrasted with asbestos. Where epoxy join with pineapple leaf fiber to invigorate high Brake cushion examples were defined by the test plan design. Tribological tests like assurance of coefficient of erosion and wear rate on every example were done. The ideal level settings for the fixings were resolved. Genuine estimations of fixings were utilized for the ideal definition of the brake cushion. Its presentation was contrasted and that of the top notch asbestos-based business brand of brake cushions. The after effect of this examination shows that pineapple leaf fiber (PALF) can be utilized as a substitution for asbestos in brake cushion produce. On the off chance that pineapple leaf fiber (PALF) brake cushion is utilized as a business brake cushion to stay away from the utilization of asbestos brake cushion will result to stop cancer-causing matter which may make disease human existence. Despite the fact that asbestos groups great mechanical properties than pineapple leaf fiber (PALF) the serious issue can be dodged that is malignant , growth causing specialist and we can utilize the elective brake cushion. This brake cushion is eco-accommodating and its filler is a plant waste and it suits to be a decent helpful item with parcel of uses. Thus the fundamental point of this paper is to create an elective item for asbestos brake cushion which is cancer-causing and it very well may be stayed away from by the utilization of regular fiber brake cushion that is pine apple leaf fiber (PALF).

No. of Pages : 29 No. of Claims : 8

(12) PATENT APPLICATION PUBLICATION
(21) Application No.202141007693 A
(19) INDIA
(22) Date of filing of Application :24/02/2021
(43) Publication Date : 05/03/2021

(54) Title of the invention : ADAPTIVE SMART MOBILE COFFER

(51) International classification	:A45C0013180000, A23B0009080000, A01F0025220000, A01F0025140000, G06Q0050020000	(71)**Name of Applicant :** **1) Mr. S. ELANGO** Address of Applicant :DEPARTMENT OF ECE, BANNARI AMMAN INSTITUTE OF TECHNOLOGY, SATHYAMANGALAM, ERODE, TAMILNADU, INDIA 638401. Tamil Nadu India
(31) Priority Document No	:NA	**2)D.R.P. GOWTHAMRAJ**
(32) Priority Date	:NA	**3)K.S. DHARSHINI**
(33) Name of priority country	:NA	**4)G. ABILASH**
(86) International Application No	:NA	**5)S. DIVYADHARSHINI**
Filing Date	:NA	**6)J. JAYASURYA**
(87) International Publication No	: NA	(72)**Name of Inventor :**
(61) Patent of Addition to Application Number	:NA	**1) Mr. S. ELANGO**
Filing Date	:NA	**2)D.R.P. GOWTHAMRAJ**
(62) Divisional to Application Number	:NA	**3)K.S. DHARSHINI**
Filing Date	:NA	**4)G. ABILASH**
		5)S. DIVYADHARSHINI
		6)J. JAYASURYA

(57) Abstract :
Agriculture is one of the major sectors in the Indian economy and within which food production plays a critical role in ensuring our food security. India now is one of the leading countries in the world on food grain production. But the grains harvesters could not store their grains due to insufficient storage of warehouses. At present, farmers can keep only a minimal amount of grains. The remaining grains are stored in the open air. Due to this, rats affect grains. The loss is more during the rainy season. The invention disclosed here addresses this problem through IoT enabled adaptive smart agriculture storage. One of the best ways to keep the grains and proper monitoring is through a mobile coffer made of steel material and coated with STEEL-IT, preventing corrosion. The mobile coffer comprises wheels so that it can be easily movable to every place. It will help farmers store their grains to be stored safely from moisture, fungus, rats, and thefts. The IoT enabled fingerprint security plays a vital role as it protects the stored grains. It is also portable so that we can access it anywhere. If anyone tries to steal the grains, the alert message will be sent to the user using IoT, and the location tracking system is used to indicate the current location of the mobile coffer. There will be an air gap adjustment for air circulation, which can be opened (or) closed by the user through the mobile application. Fingerprint security and wheel stopper integrated with IoT technology play a significant role as it reduces theft. Finally, we use a solar panel along with a mobile coffer for the power supply.

No. of Pages : 11 No. of Claims : 8

(12) PATENT APPLICATION PUBLICATION
(19) INDIA
(22) Date of filing of Application :24/02/2021
(21) Application No.202141007720 A
(43) Publication Date : 05/03/2021

(54) Title of the invention : MOBILE PHONE CHARGING USING HUMAN BODY TEMPERATURE

(51) International classification	:H02J0007000000, H02J0007020000, H04W0084180000, H04W0052020000, H04M0019080000
(31) Priority Document No	:NA
(32) Priority Date	:NA
(33) Name of priority country	:NA
(86) International Application No	:NA
Filing Date	:NA
(87) International Publication No	: NA
(61) Patent of Addition to Application Number	:NA
Filing Date	:NA
(62) Divisional to Application Number	:NA
Filing Date	:NA

(71)**Name of Applicant :**
1) Dr. M. SUDHA
Address of Applicant :PROFESSOR AND HEAD, DEPARTMENT OF ELECTRONICS AND COMMUNICATIONS ENGINEERING, PAAVAI ENGINEERING COLLEGE (AUTONOMOUS), NH-44, PAAVAI NAGAR, PAACHAL, NAMAKKAL - 637408, TAMIL NADU, INDIA. Tamil Nadu India
2)Mrs. E. SANGEETHA
3)Mr.S. VIJAYAKUMAR
4)Mr.S. LOGANATHAN
5)K. VINOTHINI
6)S. VINOTHINI
7)S. SELSHIYA
8)S. PRABHAKARAN
9)M. VISWANATHAN
10)T.J. SRIKANTH
11)A. ARVINTH
12)V. KEERTHIRAJA
13)R. KARUNAMOORTHY
(72)**Name of Inventor :**
1) Dr. M. SUDHA
2)Mrs. E. SANGEETHA
3)Mr.S. VIJAYAKUMAR
4)Mr.S. LOGANATHAN
5)K. VINOTHINI
6)S. VINOTHINI
7)S. SELSHIYA
8)S. PRABHAKARAN
9)M. VISWANATHAN
10)T.J. SRIKANTH
11)A. ARVINTH
12)V. KEERTHIRAJA
13)R. KARUNAMOORTHY

(57) Abstract :
The present invention provides Energy sources differ throughout the world, as do the costs of acquiring those sources. Electric energy has become an important element in our daily lives, especially for those devices that cannot be eliminated due to necessity. The usage of mobile phones has become an important element of our lives and their battery consumption is increasing due to the installation of a variety of Android applications. Electricity is required to charge the battery of the mobile phone, however and at times, while travelling in a remote area there might not be access to electricity. Thus, the mobile would not be able to recharged. This invention presents the idea to design a mobile charging system using the sensor. The thermal energy from the human body has been utilized to generate the electric power needed for the mobile charging process.In recent years, wireless sensor networks (WSNs) are widely applied in many different fields, such as environment surveillance, health monitoring, smart home, warehouse management, etc. The present invention implements in simple wireless charger circuit for mobile phones is presented. The present invention implements wireless charging on mobile devices based on body temperature. Sensor nodes in conventional WSNs are usually powered by energy-limited batteries, therefore the network lifetime is limited by the battery capacity. To do this, a microcontroller aurdino UNO board device is connected to the human body. The difference in temperature between the human body and the atmosphere generates the voltage at the output of the sensor. The output from the sensor is then given to the microcontroller UNO board and amplified to generate 5 volts which in turn are usedto charge the mobile. Continuous non-contact monitoring of bodytemperature that is both convenient and accurate has been a challenge. Thermometers that remain in contact with the body are inconvenient and can be difficult to keep in place. On the other hand, non- contact far infrared (FIR) sensors can be influenced by heat fromsources other than the object being monitored, causing temperature measurements to be inaccurate.

No. of Pages : 9 No. of Claims : 4

(12) PATENT APPLICATION PUBLICATION
(21) Application No.202141007722 A
(19) INDIA
(22) Date of filing of Application :24/02/2021
(43) Publication Date : 05/03/2021

(54) Title of the invention : LIFT TRAIN

(51) International classification	:A63B0023120000, F03G0003000000, A23G0007000000, G01L0007000000, E05D0013000000	(71)**Name of Applicant :** **1)N.K. RAMALINGAM** Address of Applicant :NO. 37, ANNA SALAI, THARAMANI (PO), KANAGAM, CHENNAI - 600113. Tamil Nadu India
(31) Priority Document No	:NA	**2)M. VISHNU**
(32) Priority Date	:NA	**3)S. VIGNESH RALARAMAN**
(33) Name of priority country	:NA	(72)**Name of Inventor :**
(86) International Application No	:NA	**1)N.K. RAMALINGAM**
Filing Date	:NA	**2)M. VISHNU**
(87) International Publication No	: NA	**3)S. VIGNESH RALARAMAN**
(61) Patent of Addition to Application Number	:NA	
Filing Date	:NA	
(62) Divisional to Application Number	:NA	
Filing Date	:NA	

(57) Abstract :
In order to avoid difficulties and insecurities the present invention consists of chain type train system with counter weight for the gravitational pull. The system consists motor with a gear box connected to the two shafts which are connected each other by spur gears, sprockets are installed in which chains are connected in series along with the train as shown in fig. drum are installed in ropes are connected in series along with counter weight as shown in fig. when the motor is engaged , the train move from the basement at the same time the counter weight moves from the receiver station . Hence safe mode of train transport in done on the high altitude areas.

No. of Pages : 11 No. of Claims : 5

(12) PATENT APPLICATION PUBLICATION
(21) Application No.202141007724 A
(19) INDIA
(22) Date of filing of Application :24/02/2021
(43) Publication Date : 05/03/2021

(54) Title of the invention : AN ARTIFICIAL INTELLIGENCE BASED SYSTEM FOR DETECTION OF BREAST CANCER IN HUMAN BODY

(51) International classification	:H04L0029080000, A61B0017340000, G16H0040670000, G16H0040630000, A61B0005050000
(31) Priority Document No	:NA
(32) Priority Date	:NA
(33) Name of priority country	:NA
(86) International Application No	:NA
Filing Date	:NA
(87) International Publication No	: NA
(61) Patent of Addition to Application Number	:NA
Filing Date	:NA
(62) Divisional to Application Number	:NA
Filing Date	:NA

(71)**Name of Applicant :**
1)Dr.C.A.Sathiyamoorthy
Address of Applicant :Professor, Dept.of Electronics & Communication Engineering, CMS College of Engineering, Namakkal-637 003. Tamil Nadu India
2)Dr.A.Manimaran
3)Dr.Bagyaraj.S
4)Dr.S.Selvakani
5)Dr. S. Sugumaran
6)Dr. Mohd Naved
7)Dr.S.Sivasakthiselvan
8)Mr.K.Nithiyanantham
9)Dr.V.Sivasankaran
10)Mr.V.Venkataramanan
11)Dr. Hariprasath Manoharan
12)Dr. Pravin. R. Kshirsagar
(72)**Name of Inventor :**
1)Dr.C.A.Sathiyamoorthy
2)Dr.A.Manimaran
3)Dr.Bagyaraj.S
4)Dr.S.Selvakani
5)Dr. S. Sugumaran
6)Dr. Mohd Naved
7)Dr.S.Sivasakthiselvan
8)Mr.K.Nithiyanantham
9)Dr.V.Sivasankaran
10)Mr.V.Venkataramanan
11)Dr. Hariprasath Manoharan
12)Dr. Pravin. R. Kshirsagar

(57) Abstract :
Abstract: The present invention relates to artificial intelligence based breast cancer detection in human body. The system involves front end hardware based on IoT that can be operated using smart application along with AI platform and cloud database for detection of breast cancer. The proposed invention comprises of user control unit (106), Raspberry pi kit (108), buzzer (105) and android application (109). Herein WI-FI module (111) is additional adapted which connect the system wirelessly through adaptive configuration to caretaker mobile phone. After the development was outlined in general, the system architecture of the innovation postulated was illustrated in figures 1 and 2.

No. of Pages : 12 No. of Claims : 4

(12) PATENT APPLICATION PUBLICATION
(21) Application No.202141007727 A
(19) INDIA
(22) Date of filing of Application :24/02/2021
(43) Publication Date : 05/03/2021

(54) Title of the invention : SOCIAL ENVIRONMENT BASED ON SENTIMENTS USING GLOBALIZED USER REVIEW ANALYSIS

(51) International classification	:G06K0009620000, G06F0040300000, G06F0040284000, G06F0040242000, G06N0005020000	(71)**Name of Applicant :** **1)Dr. G. MUNEESWARI** Address of Applicant : ASSOCIATE PROFESSOR/ DEPARTMENT OF CSE, SCHOOL OF ENGG. & TECH., CHRIST(DEEMED TO BE UNIVERSITY), BANGALORE, KARNATAKA, INDIA, 560029 Karnataka India
(31) Priority Document No	:NA	
(32) Priority Date	:NA	**2)Dr. J. BHUVANA**
(33) Name of priority country	:NA	**3)Dr. R. KAMALRAJ**
(86) International Application No	:NA	**4)Dr. P. JULIAN BENEDIT**
Filing Date	:NA	**5)Dr. K. NATARAJAN**
(87) International Publication No	: NA	(72)**Name of Inventor :**
(61) Patent of Addition to Application Number	:NA	**1) Dr. G. MUNEESWARI**
Filing Date	:NA	**2)Dr. J. BHUVANA**
		3)Dr. R. KAMALRAJ
(62) Divisional to Application Number	:NA	**4)Dr. P. JULIAN BENEDIT**
Filing Date	:NA	**5)Dr. K. NATARAJAN**

(57) Abstract :
A simple yet efficient model, called Globalized User Sentiment Analysis (GURA) by using the property that sentiment classification has two opposite class labels (i.e., positive and negative), we first propose a data expansion technique by creating sentiment toggled reviews. The original and switched reviews are constructed in a one-to-one correspondence. Thereafter, we enhance the dual training (DT) algorithm and a dual forecasting (DF) algorithm separately, to make use of the original and switched samples in pairs for training a statistical classifier and make predictions. In DT, the classifier is learnt by maximizing a combination of probability of the original and switched training data samples. In DF, predictions are made by considering two sides of one review. That is, we measure not only how positive/ negative the original review is; but also how negative/ positive the reversed review is. We further extend our framework from binary (positive vs. negative) classification to 3-class (positive vs. negative vs. neutral) sentiment classification, by taking the neutral reviews into consideration in both dual training and dual forecasting. To reduce GURA's dependency on an external antonym dictionary, we finally develop a corpus-based method for constructing a pseudo-antonym dictionary. The pseudo antonym dictionary is language-independent and domain-adaptive. It makes the DSA model possible to be applied into a wide range of applications. In the proposed system we have also included a sentiment graph feature. The overall polarity of the reviews can be viewed in the sentiment graph. DSA model is very effective for polarity classification and it significantly outperforms several alternative methods of considering polarity shift. It has major implications especially for sentiment analysis tasks with limited lexical resource and domain knowledge. Pseudo - antonym dictionary reduces DSA:s dependency on an external antonym dictionary. Output will be more accurate.

No. of Pages : 11 No. of Claims : 5

(12) PATENT APPLICATION PUBLICATION
(21) Application No.202141007728 A
(19) INDIA
(22) Date of filing of Application :24/02/2021
(43) Publication Date : 05/03/2021

(54) Title of the invention : CAR ACCIDENT RESCUE USING AN INTELLIGENT DOOR AND WINDOW SYSTEM

(51) International classification	:B60Q0009000000, B60R0021000000, C23C0028000000, H01L0029940000, H04W0016100000	(71)**Name of Applicant :** **1)Dr. VINAY KUMAR** Address of Applicant : IT VERTICAL INURTURE, BANGALORE, KARNATAKA, INDIA, 560052 Karnataka India **2)Dr. S. SARAVANA KUMAR**
(31) Priority Document No	:NA	(72)**Name of Inventor :**
(32) Priority Date	:NA	**1) Dr. VINAY KUMAR**
(33) Name of priority country	:NA	**2)Dr. S. SARAVANA KUMAR**
(86) International Application No	:NA	
Filing Date	:NA	
(87) International Publication No	: NA	
(61) Patent of Addition to Application Number	:NA	
Filing Date	:NA	
(62) Divisional to Application Number	:NA	
Filing Date	:NA	

(57) Abstract :
India is densely populated and the states are noisy, crowded, polluted and typically chaotic. The roads are congested and encroached by other activities. The total number of fatal accidents as well as related fatality in India is increasing over the years. Persons killed per accidents are alarmingly high, during the recent years. The easy solution to avoid death cases during car accident is by rescuing the human by the provision of making the car doors and windows open automatically.

No. of Pages : 7 No. of Claims : 3

(12) PATENT APPLICATION PUBLICATION
(21) Application No.202141007732 A
(19) INDIA
(22) Date of filing of Application :24/02/2021
(43) Publication Date : 05/03/2021

(54) Title of the invention : METHOD FOR DEVELOPMENT OF POROUS METAL SUPPORTS FOR ENERGY APPLICATIONS

(51) International classification	:C23C0004131000, C23C0004060000, C23C0004180000, C23C0004120000, C23C0004020000
(31) Priority Document No	:NA
(32) Priority Date	:NA
(33) Name of priority country	:NA
(86) International Application No	:NA
Filing Date	:NA
(87) International Publication No	: NA
(61) Patent of Addition to Application Number	:NA
Filing Date	:NA
(62) Divisional to Application Number	:NA
Filing Date	:NA

(71)**Name of Applicant :**
1)NALLURI ABHISHEK
Address of Applicant :House no: 54-3-22, ramalayam street, Isukathota, Visakhapatnam- 530003, Andhra Pradesh, India. Andhra Pradesh India
2)Dr.Vanthala Varaha Siva Prasad
3)Arghya Chakravorty
4)Maduthuri Venkatesh
5)Ravi kumar kottala
6)Divakar senthilvel
7)Teeda Prasanth kumar
8)Nalli Murali Krishna
9)Hanumantu kiran kumar
10)Bobba Sasi Kiran
11)Kakinada Abhiram
(72)**Name of Inventor :**
1)NALLURI ABHISHEK
2)Dr.Vanthala Varaha Siva Prasad
3)Arghya Chakravorty
4)Maduthuri Venkatesh
5)Ravi kumar kottala
6)Divakar senthilvel
7)Teeda Prasanth kumar
8)Nalli Murali Krishna
9)Hanumantu kiran kumar
10)Bobba Sasi Kiran
11)Kakinada Abhiram

(57) Abstract :
Porous metal templates are much needed for facilitating gas flow along with providing structural support and integrity to the system. Many sensors and energy systems demand porous metal supports rather than ceramic based structures. Preventing the unfavourable chemical reaction during template development is a critical challenge to address. This invention deals with developing porous metal substrates build with stainless steel and its alloys. Processing parameters of a thermal spraying technique along with post treatment operating steps are disclosed in the invention.

No. of Pages : 18 No. of Claims : 10

(12) PATENT APPLICATION PUBLICATION
(21) Application No.202141007760 A
(19) INDIA
(22) Date of filing of Application :24/02/2021
(43) Publication Date : 05/03/2021

(54) Title of the invention : IMPUTATION PROCEDURES OF SPARSE AND SKIMPY PLANT TAXONOMY DATA USING CAMS CLASSIFIER

(51) International classification	:G06K0009620000, G06N0020000000, G06N0007000000, G16B0030000000, G06N0005040000
(31) Priority Document No	:NA
(32) Priority Date	:NA
(33) Name of priority country	:NA
(86) International Application No	:NA
Filing Date	:NA
(87) International Publication No	: NA
(61) Patent of Addition to Application Number	:NA
Filing Date	:NA
(62) Divisional to Application Number	:NA
Filing Date	:NA

(71)**Name of Applicant :**
1)Dr. M.Latha Isabel
Address of Applicant :Assistant Professor of Botany, NGM College, Pollachi 642001 Tamil Nadu India
2)Dr.A.Linda Sherin
3)Dr.A.Finny Belwin
4)Dr.Antony Selvadoss Thanamani
5)Dr.A.Kanagaraj
6)Dr.S.Niraimathi
(72)**Name of Inventor :**
1)Dr. M.Latha Isabel
2)Dr.A.Linda Sherin
3)Dr.A.Finny Belwin
4)Dr.Antony Selvadoss Thanamani
5)Dr.A.Kanagaraj
6)Dr.S.Niraimathi

(57) Abstract :
Sparse and Skimpy Inconsistent data are pervasive and challenging in nature and creates terminal damage issue in every information data set. It is estimated that the performance of Multiple Imputation focuses on several unsupervised ML algorithms like mean, median, standard deviation and Supervised ML techniques for probabilistic algorithm like NBI classifier. Such research is carried out employing a comprehensive range of databases, for which sparse and skimpy cases are first filled in by various sets of plausible values to create multiple completed datasets, then standard complete- data operations are applied to each completed dataset, and finally the multiple sets of results combine to generate a single inference. This research proposes to implement CAMS Classifier in the Imputation procedures to overcome the challenges in Sparse and Skimpy Plant Taxonomy data. This research article offers general guidelines for selection of suitable data imputation algorithms based on characteristics of the Plant Taxonomy data. CAMS Classifier Implements Bolzano Weierstrass theorem along with Stochastic process and Markov chain process in machine learning techniques to assess the functioning of every sequence of rational and irrational number has a monotonic subsequence and specify every sequence always has a finite boundary. For estimating imputation of sparse and skimpy Plant Taxonomy data, the standard machine learning repository dataset has been applied. This Article elucidates Machine learning techniques with new mathematical methods based on Na¯ve Bayesian Classifier and Bolzano Weierstrass Theorem, with a background of related literature review. Experimental analyses reveals that CAMS Classifier is better and superior than NBC for multiple imputation.

No. of Pages : 11 No. of Claims : 6

(12) PATENT APPLICATION PUBLICATION
(19) INDIA
(22) Date of filing of Application :24/02/2021
(21) Application No.202141007770 A
(43) Publication Date : 05/03/2021

(54) Title of the invention : COLLISION-RESISTANT CHASSIS SYSTEM WITH DEPLOYABLE EMERGENCY BALANCERS

(51) International classification	:B60R0021000000, B60R0019020000, B60W0010180000, B60R0019180000, B62H0001120000
(31) Priority Document No	:NA
(32) Priority Date	:NA
(33) Name of priority country	:NA
(86) International Application No	:NA
Filing Date	:NA
(87) International Publication No	: NA
(61) Patent of Addition to Application Number	:NA
Filing Date	:NA
(62) Divisional to Application Number	:NA
Filing Date	:NA

(71)**Name of Applicant :**
1)VANGALA ANIL KUMAR
Address of Applicant :Flat 104, Renuka Shakti Apartments, Opp. Bharatiya Vidya Bhavan, King Koti , Hyderabad - 500029, Telangana, India. Telangana India
2)VANGALA SUREKHA
(72)**Name of Inventor :**
1)VANGALA ANIL KUMAR
2)VANGALA SUREKHA

(57) Abstract :
Exemplary embodiments of the present disclosure directed towards a collision-resistant chassis system of a vehicle, comprising multi-dimensional polygon structure includes internal triangulated elements configured to sustain and withstand front collisions with high intensity, internal triangulated elements configured to absorb energy generated and to resist any deformation of main chassis; removable/replaceable/retrofittable rear collision box structure includes dissipation plates configured to sustain and withstand rear collisions with high intensity, dissipation plates configured to burst into pieces to dissipate high intensity energy generated during collisions thereby minimizing flow of energy and changing the direction; set of removable/replaceable/retrofittable emergency balancers configured to deploy linear electric actuators with the help of sensors to prevent vehicle from falling on the ground thereby helping in keeping the vehicle in upright position, sensors configured to sense the need for deployment of balancers and transmit signals to processing device to deploy linear electric actuators to balance vehicle. Fig. 1 and Fig. 2C.

No. of Pages : 46 No. of Claims : 24

(12) PATENT APPLICATION PUBLICATION
(21) Application No.202141007777 A
(19) INDIA
(22) Date of filing of Application :24/02/2021
(43) Publication Date : 05/03/2021

(54) Title of the invention : CHICKEN STERNUM EXTRACT COMPRISING UNDENATURED TYPE II COLLAGEN, AND METHOD OF PRODUCTION THEREOF

(51) International classification	:A61K0038390000, C08B0037000000, A61K0031737000, C08L0005080000, A23L0033280000
(31) Priority Document No	:NA
(32) Priority Date	:NA
(33) Name of priority country	:NA
(86) International Application No	:NA
Filing Date	:NA
(87) International Publication No	: NA
(61) Patent of Addition to Application Number	:NA
Filing Date	:NA
(62) Divisional to Application Number	:NA
Filing Date	:NA

(71)**Name of Applicant :**
1)MICROCORE RESEARCH LABORATORIES PVT. LTD.
Address of Applicant :9TH KM, 30 FEET ROAD, PALANI MAIN ROAD, CHECKUMEDU, ERODE Tamil Nadu India
(72)**Name of Inventor :**
1)MARIMUTHU CHANDRAMOHAN
2)RAJENDRAN PRIYA

(57) Abstract :
The present invention provides a method (200) of producing chicken sternum extract comprising undenatured type II collagen, glycosaminoglycan, chondroitin sulphate, and hyaluronic acid, wherein undenatured type II collagenhas an active epitope concentration of 200-300 kilodalton. The method (200) comprises a step (204) of treating the raw chicken sternums with 3-5% nano-curcumin as a sanitizing agent; a step (206) of mechanical peeling and separation of fatty layers (106) and unwanted cartilages (104) from the sanitized chicken sternums; a step (208) of mechanical slicing of the sternums into star shaped chips (108); and a step (210) of dehydrating with insoluble dietary fiber of minimal 1:8 water absorption at a temperature of 40 oC to retain the dehydrated type II collagen in its original cross linked structure allowing the epitope of undenatured type II collagen in large quantities in unmodified nature. Fig. 2

No. of Pages : 29 No. of Claims : 10

(12) PATENT APPLICATION PUBLICATION
(19) INDIA
(22) Date of filing of Application :24/02/2021
(21) Application No.202141007807 A
(43) Publication Date : 05/03/2021

(54) Title of the invention : ARECA LEAF SHREDDING MACHINE

(51) International classification	:A61K0036889000, B02C0018180000, B02C0018140000, B02C0018000000, B26D0001200000
(31) Priority Document No	:NA
(32) Priority Date	:NA
(33) Name of priority country	:NA
(86) International Application No	:NA
Filing Date	:NA
(87) International Publication No	: NA
(61) Patent of Addition to Application Number	:NA
Filing Date	:NA
(62) Divisional to Application Number	:NA
Filing Date	:NA

(71)**Name of Applicant :**
1)Dr.L.ANOJ KUMAR
Address of Applicant :Associate Professor, Department of Mechanical Engineering, Jansons Institute of Technology, Karumathampatti, Coimbatore, Tamil Nadu, India 641659 Tamil Nadu India
2)Mr.M.KARTHIK
3)Mr.P.S.DIVISHARAN
4)Dr.J.B.VEERAMALINI
5)Mr.E.JAYAVARTHANAVEL
6)Mr.K.MUTHURAJ
7)Mrs.S.GOMATHI
8)Dr.B.BABY PRIYA
9)Mr.R.DARSHANKUMAR
10)Mr.M.KRISHNA KUMAR
11)Mr.K.MAADESH KUMAR
12)Mr.K.KRISHNA KUMAR
13)Dr.P.JENOPAUL
14)Dr.P.GOWTHAM
15)Mrs.S.ARUNA
16)Dr.SUMAN MANN
17)Dr.M.SOUNDARRAJAN
(72)**Name of Inventor :**
1)Dr.L.ANOJ KUMAR
2)Mr.M.KARTHIK
3)Mr.P.S.DIVISHARAN
4)Dr.J.B.VEERAMALINI
5)Mr.E.JAYAVARTHANAVEL
6)Mr.K.MUTHURAJ
7)Mrs.S.GOMATHI
8)Dr.B.BABY PRIYA
9)Mr.R.DARSHANKUMAR
10)Mr.M.KRISHNA KUMAR
11)Mr.K.MAADESH KUMAR
12)Mr.K.KRISHNA KUMAR
13)Dr.P.JENOPAUL
14)Dr.P.GOWTHAM
15)Mrs.S.ARUNA
16)Dr.SUMAN MANN
17)Dr.M.SOUNDARRAJAN

(57) Abstract :
ARECA LEAF SHREDDING MACHINE This invention relates to areca leaf shredding machine which is used for making plates, cups and disposable table-wares mainly used in temples, functions etc. The collected areca leaf disposal is loaded in the hopper, the hopper is in the tapered manner in which it transfers the disposal directly to the cutter assembly section. The cutter assembly section is consisting of two parts. They are Fixed cutter and Rotating cutter.The fixed cutter (OHNS MATERIAL) is placed on the frame, where as it is in a stationary manner which acts as a cutting tool. It is also an adjustable type where we can set the clearance between the cutting edges. The rotating cutter is also called as hob, whereas hob consists of four (OHNS MATERIAL) cutting tools. The cutting edges of the hob are opposite to the fixed cutter.By this arrangement of cutter assembly, we can convert the areca leaf disposal into useful areca powder. Finally, the grained areca powder is transferred through an aluminium tray and is collected.

No. of Pages : 19 No. of Claims : 6

(12) PATENT APPLICATION PUBLICATION
(19) INDIA
(22) Date of filing of Application :24/02/2021

(21) Application No.202141007828 A
(43) Publication Date : 05/03/2021

(54) Title of the invention : GENERATION OF E-BILL TRANSACTION NUMBER USING BLOCKCHAIN TECHNOLOGY

(51) International classification	:H04L0009320000, G06Q0020060000, H04L0009060000, H04L0029080000, G06Q0020380000
(31) Priority Document No	:NA
(32) Priority Date	:NA
(33) Name of priority country	:NA
(86) International Application No	:NA
Filing Date	:NA
(87) International Publication No	: NA
(61) Patent of Addition to Application Number	:NA
Filing Date	:NA
(62) Divisional to Application Number	:NA
Filing Date	:NA

(71)**Name of Applicant :**
1)Dr.A.Kishore Kumar
Address of Applicant :Associate Professor Department of ECE, Hindusthan College of Engineering and Technology, Valley Campus, Pollachi Highway, Coimbatore -641032. Email id: kishore.hindusthan@gmail.com Mobile No: 9894847519 Tamil Nadu India
2)Mrs.M.Padmapriya
3)Mr.A.Anbazhagan
4)Dr.N.SATHEESH KUMAR
5)Dr.UDAYAKUMAR DURAIRAJ
6)Dr M.ANAND
7)Geeta.K
8)R.Lakshmi
9)Dr.A.V.G.A.MARTHANDA
10)K Lakshmi Prasad
11)Mr.M.SIVARAMKRISHNAN
12)Mr.V. Lokesh

(72)**Name of Inventor :**
1)Dr.A.Kishore Kumar
2)Mrs.M.Padmapriya
3)Mr.A.Anbazhagan
4)Dr.N.SATHEESH KUMAR
5)Dr.UDAYAKUMAR DURAIRAJ
6)Dr M.ANAND
7)Geeta.K
8)R.Lakshmi
9)Dr.A.V.G.A.MARTHANDA
10)K Lakshmi Prasad
11)Mr.M.SIVARAMKRISHNAN
12)Mr.V. Lokesh

(57) Abstract :
The blockchain technology is also mentioned to as a circulated ledger technology, and is a developing technology in which numerous computing devices together contribute in accounting and jointly preserve a complete circulated database. The blockchain technology has been extensively utilized in numerous fields since the blockchain technology structures in decentralization, openness, and transparency, and each computing device can contribute in database recording and quickly accomplish data synchronization. Blockchain technology (sometimes simply referred to as blockchain) is a moderately new technology that has been utilized in digital currency operations. This invention also provides blockchain-based promoting method, where this method is applied to a node expedient in the blockchain, the blockchain contains several levels of accounts utilized to preserve e-bill number segments, and the method consist of: a receiving unit, organized to accept a billing transaction printed to the blockchain, where the billing transaction comprises billing data and an account identifier of an account of a biller.

No. of Pages : 13 No. of Claims : 3

(12) PATENT APPLICATION PUBLICATION
(21) Application No.202141007864 A
(19) INDIA
(22) Date of filing of Application :24/02/2021
(43) Publication Date : 05/03/2021

(54) Title of the invention : MEGA-MATH ENLIGHTENED GENIUS ACTIVATION

(51) International classification	:G09B0019000000, G06Q0050200000, G09B0019020000, G09B0007000000, G06F0008200000	(71)**Name of Applicant :** **1)Dr.Biji kumar.R** Address of Applicant :Pushpa Bhavan, Anchalikonam, Ayira.P.O, Parassala, Pin 695502 Mobile No: 9995890580 Email: bijikumar_r@yahoo.com Kerala India
(31) Priority Document No	:NA	(72)**Name of Inventor :** **1)Mrs Shana.L**
(32) Priority Date	:NA	
(33) Name of priority country	:NA	
(86) International Application No	:PCT//	
Filing Date	:01/01/1900	
(87) International Publication No	: NA	
(61) Patent of Addition to Application Number	:NA	
Filing Date	:NA	
(62) Divisional to Application Number	:NA	
Filing Date	:NA	

(57) Abstract :
The invention pertains to the field of education. More particularly, the invention pertains to math in all its beautiful avatars to transform children into the orbit of success. The outcome of invention is the Holistic Development of our Future Generation and Prepare them for their Journey to Success through neuro-scientific and scientific & evidence-based learning pedagogy which enables the learners to achieve their full potential and prepare them for Futuristic life through brain development. We provide unique, personalized and application-oriented innovative teaching-learning products and services that ensure Outcome-based Education and act as a global catalyst to meet the upcoming technological and scientific demands. This influence major sections of the society by creating a constructive ecosystem, wherein we nurture socially and culturally active, economically viable individuals, enriched with an appetite for eco-friendliness by practicing green concepts like environment protection, reducing plastic usage, sustainable living, etc. End result is we create intellectually empowered and holistically transformed Students, Teachers and Society. We come up with a unique and innovative pedagogical approach for mathematics as per NEP 2020. MEGA is based on experiential learning, which connects mathematical thinking to the real-world context using cross-cutting methods, aiming to develop 21st - century skills. MEGA is the perfect blend of 6Es of NGSS and Bloom€™s Taxonomy aiming to equip the child to achieve 21st- century skills and global competitive exams like PISA and IMO focusing on NEP 2020.

No. of Pages : 22 No. of Claims : 3

(12) PATENT APPLICATION PUBLICATION
(19) INDIA
(22) Date of filing of Application :25/02/2021

(21) Application No.202141007888 A
(43) Publication Date : 05/03/2021

(54) Title of the invention : THE METHOD OF CONTROLLING DYNAMIC VIBRATION OF DRILL BIT.

(51) International classification	:E21B0049000000, G01V0099000000, A61B0005110000, E21B0043000000, E21B0044000000
(31) Priority Document No	:NA
(32) Priority Date	:NA
(33) Name of priority country	:NA
(86) International Application No	:NA
Filing Date	:NA
(87) International Publication No	: NA
(61) Patent of Addition to Application Number	:NA
Filing Date	:NA
(62) Divisional to Application Number	:NA
Filing Date	:NA

(71)**Name of Applicant :**
1)Dr. Kalapala.Prasad
Address of Applicant :Department of mechanical engineering, UCEKJNTUK Kakinada, Andra Pradesh 533003,India Andhra Pradesh India
2)Dr. Danaiah Puli
3)Dr. Raffi Mohammed
4)Pachakhan Mayana
5)Dr Vikash Kumar Singh Chauhan
6)Dr. Upendra Rajak
7)Tulala Rajasanthosh Kumar
(72)**Name of Inventor :**
1)Dr. Kalapala.Prasad
2)Dr. Danaiah Puli
3)Dr. Raffi Mohammed
4)Pachakhan Mayana
5)Dr Vikash Kumar Singh Chauhan
6)Dr. Upendra Rajak
7)Tulala Rajasanthosh Kumar

(57) Abstract :
The method of controlling dynamic vibration of drill bit comprising the methods consist of: constructing at least one surrogate representing at least a portion of a bottom hole assembly; associating at least two virtual sensors with each of the at least one surrogates such that the at least two sensors are spaced longitudinally from each other along each bottom hole assembly; utilizing at least one frequency-domain model to calculate at least one state of the at least two virtual sensors during one or more simulated drilling operations for each of the at least one surrogates; calculating a transmissibility index between the at least two virtual sensors for each of the at least one surrogates, wherein the transmissibility index based at least in part on at least one of the calculated states; using the calculated transmissibility index for each of the at least one transmissibility of vibrations within the bottom hole assembly.

No. of Pages : 28 No. of Claims : 10

(12) PATENT APPLICATION PUBLICATION
(19) INDIA
(22) Date of filing of Application :25/02/2021
(21) Application No.202141007889 A
(43) Publication Date : 05/03/2021

(54) Title of the invention : MULTIMODAL VOICE BASED AUTHENTICATION FRAMEWORK

(51) International classification	:G06F0021320000, H04L0029060000, G10L0015220000, G10L0017000000, G10L0017240000
(31) Priority Document No	:NA
(32) Priority Date	:NA
(33) Name of priority country	:NA
(86) International Application No	:NA
Filing Date	:NA
(87) International Publication No	: NA
(61) Patent of Addition to Application Number	:NA
Filing Date	:NA
(62) Divisional to Application Number	:NA
Filing Date	:NA

(71)**Name of Applicant :**
1)Dr. B. Rajasekhar
Address of Applicant :Associate Professor, ECE Department, Gudlavalleru Engineering College, Gudlavalleru, Krishna (Dist.), Andhra Pradesh- 521356 Andhra Pradesh India
2)Dr. M. Kamaraju
3)Dr. V. Sumalatha
(72)**Name of Inventor :**
1)Dr. B. Rajasekhar
2)Dr. M. Kamaraju
3)Dr. V. Sumalatha

(57) Abstract :
The main design of the present invention discloses the multimodal voice-based framework for security applications, which comprises voice authentication and matcher. The main purpose of the present invention is to predict the authorized user based on their voice without replacing the voice template while aging. Initially, the authorized user store their data and voice templates on the server. The input voice of the user is taken to predict the age, gender, and voice and then passes to the matcher to match the predicted age, gender, and voice to find out the authentication. The output of the age-based authentication, voice-based authentication, and age-based manipulation is sent to the multiplier. Multiplier receives the user€™s data and input from authentication to detect whether the user is an authenticated person or not. Finally, if the person is an authorized user, then it allows the user to access their system/application.
[To be published with Figure.1]

No. of Pages : 12 No. of Claims : 6

(12) PATENT APPLICATION PUBLICATION
(21) Application No.202141007899 A
(19) INDIA
(22) Date of filing of Application :25/02/2021
(43) Publication Date : 05/03/2021

(54) Title of the invention : FINGERTIP BASED HEALTH MONITORING SYSTEM

(51) International classification	:A61B0005000000, G06Q0050220000, A61B0005020500, G16H0040630000, G16H0050700000	(71)**Name of Applicant :** **1)Bharath Institute of Higher Education and Research** Address of Applicant :No.173, Agharam road, Selaiyur, Chennai - 600073. Tamil Nadu India
(31) Priority Document No	:NA	(72)**Name of Inventor :** **1)Dr. Abarna**
(32) Priority Date	:NA	
(33) Name of priority country	:NA	
(86) International Application No	:NA	
Filing Date	:NA	
(87) International Publication No	: NA	
(61) Patent of Addition to Application Number	:NA	
Filing Date	:NA	
(62) Divisional to Application Number	:NA	
Filing Date	:NA	

(57) Abstract :
ABSTRACT Fingertip Based Health Monitoring System Body health monitoring is very important to us to make sure our health is in excellent condition. The regular monitoring of the health condition to the people can save many lives and it can analyse and prevent any health problem before it gets severe. The invention is related to fingertip based health monitoring system by the sensor technology, which is used to sense the signal from the measured parameters. This system monitors the health of the patients and it reports the conditions to the doctors or to the health care.

No. of Pages : 18 No. of Claims : 1

(12) PATENT APPLICATION PUBLICATION
(21) Application No.202141007904 A
(19) INDIA
(22) Date of filing of Application :25/02/2021
(43) Publication Date : 05/03/2021

(54) Title of the invention : E SMART WEARABLE HEALTH MONITORING AND REPORTING SYSTEM

(51) International classification	:A61B0005000000, A61B0005024000, A61B0005145000, A61B0005020500, G16H0040630000
(31) Priority Document No	:NA
(32) Priority Date	:NA
(33) Name of priority country	:NA
(86) International Application No	:NA
Filing Date	:NA
(87) International Publication No	: NA
(61) Patent of Addition to Application Number	:NA
Filing Date	:NA
(62) Divisional to Application Number	:NA
Filing Date	:NA

(71)**Name of Applicant :**
1)Bharath Institute of Higher Education and Research
Address of Applicant :No.173, Agharam road, Selaiyur, Chennai - 600073. Tamil Nadu India
(72)**Name of Inventor :**
1)Dr. Sai Rama Krishnan

(57) Abstract :
ABSTRACT E smart wearable health monitoring and reporting system The healthcare monitoring system has emerged as one of the most vital system and became technology oriented from the past decade. Humans are facing a problem of unexpected death due to various illnesses which is because of lack of medical care to the patients at right time. By using the smart wearable device they can monitor the health and report condition of the health regularly. Thus, smart wearable health monitoring system effectively monitors patient€™s health status and save life on time.

No. of Pages : 17 No. of Claims : 1

(12) PATENT APPLICATION PUBLICATION
(21) Application No.202141007923 A
(19) INDIA
(22) Date of filing of Application :25/02/2021
(43) Publication Date : 05/03/2021

(54) Title of the invention : E SMART WEARABLE HEART RATE AND ECG MONITOR WITH AUTOMATIC DIAGNOSIS RESULT

(51) International classification	:A61B0005000000, H04W0004800000, A61B0005024000, A61B0005020500, A61B0005010000	(71)**Name of Applicant :** **1)Bharath Institute of Higher Education and Research** Address of Applicant :No.173, Agharam road, Selaiyur, Chennai - 600073 Tamil Nadu India (72)**Name of Inventor :** **1)Dr. Jayapradha**
(31) Priority Document No	:NA	
(32) Priority Date	:NA	
(33) Name of priority country	:NA	
(86) International Application No	:NA	
Filing Date	:NA	
(87) International Publication No	: NA	
(61) Patent of Addition to Application Number	:NA	
Filing Date	:NA	
(62) Divisional to Application Number	:NA	
Filing Date	:NA	

(57) Abstract :
ABSTRACT E smart wearable heart rate and ECG monitor with automatic Diagnosis result Wearable technology in health care is an electronic device which can easily wear by the people to monitor the health condition. This system can measure the heart rate and it gives the ECG report of the person to the connected smart phone. The proposed system comprises a wireless wearable device, a smartphone, and a remote server. Data transmission between a wearable device and a smartphone is conducted via Bluetooth low energy (BLE). This system is a compact, lightweight, and comfortable to wear. A smartphone application provides the interface for the display of data related to HR and as well as waveforms related to ECG.

No. of Pages : 17 No. of Claims : 1

(12) PATENT APPLICATION PUBLICATION
(21) Application No.202141007927 A
(19) INDIA
(22) Date of filing of Application :25/02/2021
(43) Publication Date : 05/03/2021

(54) Title of the invention : SMART WEIGHMENT AND CENTRALIZED PAYROLL RECKONING MACHINE FOR TEA PLANTATIONS

(51) International classification	:G06Q0010100000, G01G0019140000, G07C0001140000, G08C0017020000, G01G0019180000	(71)**Name of Applicant :** **1) Mr. K. RAVICHANDRAN** Address of Applicant :161A, PANGUNI STREET, SIVARAM NAGAR, NEAR BY ELITE AVENUE, COIMBATORE, TAMIL NADU, INDIA, 641006 Tamil Nadu India
(31) Priority Document No	:NA	**2)Mr. K. RAJARAM**
(32) Priority Date	:NA	**3)Dr. M. KALAMANI**
(33) Name of priority country	:NA	**4)Dr. S. RAJAN**
(86) International Application No	:NA	**5)Dr. M. KRISHNAMOORTHI**
Filing Date	:NA	(72)**Name of Inventor :**
(87) International Publication No	: NA	**1) Mr. K. RAVICHANDRAN**
(61) Patent of Addition to Application Number	:NA	**2)Mr. K. RAJARAM**
Filing Date	:NA	**3)Dr. M. KALAMANI**
(62) Divisional to Application Number	:NA	**4)Dr. S. RAJAN**
Filing Date	:NA	**5)Dr. M. KRISHNAMOORTHI**

(57) Abstract :
Today, the tea plantation employees face a lot of problem to earn accurate payroll. The primary objective of this invention is to develop the user friendly, compact, low cost and wireless automated payroll machine for tea plantation employees. It provides authenticate, accurate and wireless automatic payroll calculation. Smart Weighment and Centralized Payroll Reckoning Machine for Tea Plantations for tea plantation employees comprising: a load cell is connected to metal hanger; a weight hook is attached in another side of said load cell; a microcontroller is used to receive the electrical signal from said load cell; a Biometric sensors, Keypad and LCD display are placed in front of said load cell which is interfaced with said microcontroller; and power supply is provided for required modules. The metal hanger is made up off long ■ Aluminum rod which is used to hang the Smart Weighment and Centralized Payroll Reckoning Machine for lea Plantations in roofs. Weight hook is made up off long Aluminum rod which is used to hold the tea leaf bags at one end and other end it is attached to load cell. The load cell is a S type model which is used to measure the weight of tea leafs and convert into its equivalent electrical signal. The Microcontroller MSC1210Y5 is an 8051 compatible microcontroller used to provide the accurate weight of tea leafs and automatically update the payroll calculation of tea plantation employees. The Biometric sensor consists of Face and Fingerprint recognition modules used to record the attendance and provides the authentication for tea plantation employees. Keypad is used to include the details of new employees and interrupt the microcontroller to change the centralized data updation timings. LCD display is used to display the weighment and worker details for immediate self verification. Smart Weighment and Centralized Payroll Reckoning Machine for Tea Plantations for tea plantation employees comprising: a GSM transmitter module is connected to the said microcontroller; a GSM receiver is communicated with said GSM transmitter; and server is attached with said GSM receiver. GSM transmitter used to send the weighment details received from said microcontroller to remote receiver. GSM receiver used to receive the weighment details from said GSM transmitter and attached with central server unit. Cloud server used to centrally update the weighment details and used to generate the different reports such as Employee ID, Date, Time, Weight of the leaf etc., of tea plantation employees.

No. of Pages : 20 No. of Claims : 12

(12) PATENT APPLICATION PUBLICATION
(21) Application No.202141007929 A
(19) INDIA
(22) Date of filing of Application :25/02/2021
(43) Publication Date : 05/03/2021

(54) Title of the invention : IOT BASED CHILD PROTECTION USING ANDROID APP

(51) International classification	:A61B0005000000, H04L0029080000, H04W0004020000, H04L0029060000, G08B0021020000
(31) Priority Document No	:NA
(32) Priority Date	:NA
(33) Name of priority country	:NA
(86) International Application No	:NA
Filing Date	:NA
(87) International Publication No	: NA
(61) Patent of Addition to Application Number	:NA
Filing Date	:NA
(62) Divisional to Application Number	:NA
Filing Date	:NA

(71)**Name of Applicant :**
1) Dr. R. JOSEPHINELEELA
Address of Applicant :BLOCK NO:13, DOOR NO:106, ETA GLOBE VILL, MAMBAKKAM, SRIPERUMBUDUR, CHENNAI, TAMIL NADU, INDIA 600126. Tamil Nadu India
2)Dr. S. SUMA CHRISTAL MARY
3)Dr. E. THENMOZHI
4)Mrs. N. SENTHAMILARASI
(72)**Name of Inventor :**
1) Dr. R. JOSEPHINELEELA
2)Dr. S. SUMA CHRISTAL MARY
3)Dr. E. THENMOZHI
4)Mrs. N. SENTHAMILARASI

(57) Abstract :
Any action by a perpetrator that causes intentional harm to a child is child abuse. In order to defend children from such difficult situations, security systems must be designed. Advances in wearable sensor technology, monitoring mechanisms and wireless communication protocols allow smart systems to be built to detect and prevent child violence. This invention addresses the analysis of various innovations that facilitate human safety and protection systems, such as Wearable Sensors, the Global Positioning System, the Global Mobile Communication System, and areas such as e-health services and location-based services. Various existing safety systems for children and women are addressed with their pros and cons.

No. of Pages : 13 No. of Claims : 6

(12) PATENT APPLICATION PUBLICATION
(21) Application No.202141007934 A
(19) INDIA
(22) Date of filing of Application :25/02/2021
(43) Publication Date : 05/03/2021

(54) Title of the invention : ELECTRONICALLY CONTROLLED AIR ASSISTED AFTER TREATMENTS SYSTEM WITH OXIDISER GENERATOR

(51) International classification	:B01D0053940000, F01N0003100000, F01N0013000000, F01N0003200000, F02M0026050000	(71)**Name of Applicant :** **1)S.BHARATHI PRIYA** Address of Applicant :289/GF, AVIGNA CELESTE, CHENGALPATTU, TAMIL NADU, INDIA 603002. Tamil Nadu India
(31) Priority Document No	:NA	(72)**Name of Inventor :** **1)V.AMUTHA**
(32) Priority Date	:NA	
(33) Name of priority country	:NA	
(86) International Application No	:NA	
Filing Date	:NA	
(87) International Publication No	: NA	
(61) Patent of Addition to Application Number	:NA	
Filing Date	:NA	
(62) Divisional to Application Number	:NA	
Filing Date	:NA	

(57) Abstract :
ABSTRACT OF THE INVENTION EAATS system is invented to clean exhaust gases from IC engines to achieve BS4, BS6 and above regulations in India (or) Equivalent regulation around the world. In this system, oxidizer is generated from air and processed with exhaust gases in reduced and controlled temperature. This system uses naturally available catalyst, thus avoiding noble metal catalyst such as palladium, Platinum, etc, which are used in SCR, EGR, other current ATS systems. Also this system his single stage reaction chamber unlike SCR, EGR, etc, which has many stages like DOC, DPF, SCR, etc. Also, impurities are removed by means of co-agulation process and made to settle down in the coagulation tank which can be removed safely and easily without affecting the environment.

No. of Pages : 12 No. of Claims : 10

(12) PATENT APPLICATION PUBLICATION
(21) Application No.202141007937 A
(19) INDIA
(22) Date of filing of Application :25/02/2021
(43) Publication Date : 05/03/2021

(54) Title of the invention : DESIGN OF AN EMBEDDED SYSTEM BASED PASSENGER SAFETY SYSTEM TO AVOID FATALITIES CAUSED WHEN PUTTING THE LIMBS OUT OF THE BUS WINDOW

(51) International classification	:G08B0021020000, B60R0021020000, G08B0005360000, G07C0005080000, B60Q0009000000
(31) Priority Document No	:NA
(32) Priority Date	:NA
(33) Name of priority country	:NA
(86) International Application No	:NA
Filing Date	:NA
(87) International Publication No	: NA
(61) Patent of Addition to Application Number	:NA
Filing Date	:NA
(62) Divisional to Application Number	:NA
Filing Date	:NA

(71)**Name of Applicant :**
1)Mr. R. SANTHANA KRISHNAN
Address of Applicant :33/13, Ramaswamy Kovil Agraharam Street, Palyamkottai, Tirunelveli, Tamil Nadu, India 627002. Tamil Nadu India
2)Dr. A. NEELA MADHESWARI
3)AMBAREESH
4)Dr. J. NIRMAL JOTHI
5)Mr. M. BECHTEL BRABI
6)Dr. S . SUNDARARAJAN
7)Dr. N. MUTHUKUMARAN
8)Dr. K. LAKSHMI NARAYANAN
(72)**Name of Inventor :**
1)Mr. R. SANTHANA KRISHNAN
2)Dr. A. NEELA MADHESWARI
3)AMBAREESH
4)Dr. J. NIRMAL JOTHI
5)Mr. M. BECHTEL BRABI
6)Dr. S . SUNDARARAJAN
7)Dr. N. MUTHUKUMARAN
8)Dr. K. LAKSHMI NARAYANAN

(57) Abstract :
Abstract This system is based on the use of an IR sensor, which is used by a laser circuit via IR to detect the barrier within or outside the window of a local bus. The main aim of this scheme is to ensure improved bus safety. If a person or child placesa hand or part of the body out of the window, an emergency alarm system placed in the bus is triggered. This tends to prevent causing any fatalities or injury. When the bus or school truck runs down the road which is dangerous for them, people frequently hang from the window their arms or body parts. This technique is based on the use of the IR as a probe. An alert alarm system on the bus will provide the bus operator with an insight to help mitigate any malfunction if a person or child takes his hand (arm) out of the windshield.

No. of Pages : 14 No. of Claims : 6

(12) PATENT APPLICATION PUBLICATION
(21) Application No.202141007938 A
(19) INDIA
(22) Date of filing of Application :25/02/2021
(43) Publication Date : 05/03/2021

(54) Title of the invention : SAFETY MONITORING FOR EMPLOYEE USING ID CARD

(51) International classification	:H04L0029060000, A23L0033155000, G16H0050300000, G06Q0010100000, G06Q0020120000
(31) Priority Document No	:NA
(32) Priority Date	:NA
(33) Name of priority country	:NA
(86) International Application No	:NA
Filing Date	:NA
(87) International Publication No	: NA
(61) Patent of Addition to Application Number	:NA
Filing Date	:NA
(62) Divisional to Application Number	:NA
Filing Date	:NA

(71)**Name of Applicant :**
1)Ms.S.Gunanandhini
Address of Applicant :Assistant Professor, Department of ECE, KPR Institute of Engineering & Technology, Coimbatore, Tamil Nadu, India 641407. Tamil Nadu India
2)Dr.G.Dhivyasri
3)Mr.VN.Manickaraj
4)Ms.S.Nithyasri
5)Ms.V.Muthunandhini
6)Ms.M.Abinaya
7)Ms.S.Ishwarya
8)Ms.S.Jerusha
9)Ms.M.Bhagavathipriya
10)Mr.K.Vinothkumar
(72)**Name of Inventor :**
1)Ms.S.Gunanandhini
2)Dr.G.Dhivyasri
3)Mr.VN.Manickaraj
4)Ms.S.Nithyasri
5)Ms.V.Muthunandhini
6)Ms.M.Abinaya
7)Ms.S.Ishwarya
8)Ms.S.Jerusha
9)Ms.M.Bhagavathipriya
10)Mr.K.Vinothkumar

(57) Abstract :

Abstract: - The designed ID card system is to monitor the safety of a person and the surrounded people with that person and it is to regularly monitor he/her health. If there is any issues in their health automatically a message is forwarded to the concerned person and to the medical maintains of that particular organization. This system is also used to check and monitor the social spacing among the individuals.

No. of Pages : 7 No. of Claims : 1

(12) PATENT APPLICATION PUBLICATION
(19) INDIA
(22) Date of filing of Application :25/02/2021
(21) Application No.202141007939 A
(43) Publication Date : 05/03/2021

(54) Title of the invention : DESIGN OF SMART TWO WHEELER SAFETY SYSTEM BASED ON EMBEDDED SENSORS

(51) International classification	:B62J0027000000, B60Q0009000000, A42B0003040000, H03K0017950000, B62J0033000000
(31) Priority Document No	:NA
(32) Priority Date	:NA
(33) Name of priority country	:NA
(86) International Application No	:NA
Filing Date	:NA
(87) International Publication No	: NA
(61) Patent of Addition to Application Number	:NA
Filing Date	:NA
(62) Divisional to Application Number	:NA
Filing Date	:NA

(71)**Name of Applicant :**
1)Dr. L. R. PRIYA
Address of Applicant :Associate Professor, ECE Department, Francis Xavier Engineering College, Tirunelveli, Tamil Nadu, India 627003. Tamil Nadu India
2)Dr. J. ALLWYN KINGSLY GLADSTON
3)Dr. N. SUBBULAKSHMI
4)Dr. C. RAMASAMY SANKAR RAM
5)Mrs. E. FRANCY IRUDAYA RANI
6)Mrs. R. NIRANJANA
7)Ms. MONICA ESTHER
8)Dr. J.B. SHAJILIN LORET
9)Ms. S. AGNES JOSHY
10)Mr. SAKTHIVEL
(72)**Name of Inventor :**
1)Dr. L. R. PRIYA
2)Dr. J. ALLWYN KINGSLY GLADSTON
3)Dr. N. SUBBULAKSHMI
4)Dr. C. RAMASAMY SANKAR RAM
5)Mrs. E. FRANCY IRUDAYA RANI
6)Mrs. R. NIRANJANA
7)Ms. MONICA ESTHER
8)Dr. J.B. SHAJILIN LORET
9)Ms. S. AGNES JOSHY
10)Mr. SAKTHIVEL

(57) Abstract :
Abstract A framework which promotes knowledge of hand removal and distracted actions of people driving motorcycles while driving. It also triggers an injury due to lack of treatment.In this system, a capacitive sensor in inductive proximity is mounted to the left handlebar of the inflator, which is connected to the ignition system. The sensor only operates if the car does not perform in mode off. The sensor has attachment to a led and a ringing buzzer, respectively, as soon as the sensor detects the absence of hands to handlebar, it alerts the driver with an LED blink and a ringing tone, which is why the device warns and turns the ignition off after a certain distance so as to place the hands on behind the vehicles. It warns the driver to keep his hand in the handlebar, when the hand is back on the sensor, the buzzer is stopped and the LED is turned off. This is a pre-programmed sensor that is directly connected to the motorcycle ignition mechanism when the car is triggered. This improvement in motorbikes would cost the real price of the road marginally.

No. of Pages : 16 No. of Claims : 6

(12) PATENT APPLICATION PUBLICATION
(21) Application No.202141007957 A
(19) INDIA
(22) Date of filing of Application :25/02/2021
(43) Publication Date : 05/03/2021

(54) Title of the invention : PULSE VELOCITY TESTER TO DETERMINE THE BONE QUALITY

(51) International classification	:A61B0006000000, G01S0015890000, G01N0029220000, G01N0029070000, G01N0029340000	(71)**Name of Applicant :** **1)Bharath Institute of Higher Education and Research** Address of Applicant :No.173, Agharam road, Selaiyur, Chennai - 600073. Tamil Nadu India (72)**Name of Inventor :** **1)Dr. Vincent**
(31) Priority Document No	:NA	
(32) Priority Date	:NA	
(33) Name of priority country	:NA	
(86) International Application No	:NA	
Filing Date	:NA	
(87) International Publication No	: NA	
(61) Patent of Addition to Application Number	:NA	
Filing Date	:NA	
(62) Divisional to Application Number	:NA	
Filing Date	:NA	

(57) Abstract :
ABSTRACT Pulse velocity tester to determine the bone quality The pulse velocity method has been used to evaluate the density of bone. This method can be used for detecting internal cracking in the bone. By using the pulse velocity method it is also possible to estimate the strength of bone in the people. The ultrasonic pulse is generated by an electro acoustical transducer. The pulse velocity tester has pulse generation circuit, transducer, radar sensor and the LCD display to show the mineral density value and the connected device to display the internal cracks inside the bone. The velocity tester is capable of measuring the transit time of a mechanical pulse through bone with a precision of approximately one microsecond. Pulse velocity for a given bone is a function of many factors; such as measuring bone density, minerals in the bone, and internal crackers in the bone.

No. of Pages : 15 No. of Claims : 1

(12) PATENT APPLICATION PUBLICATION
(19) INDIA
(22) Date of filing of Application :25/02/2021

(21) Application No.202141007962 A
(43) Publication Date : 05/03/2021

(54) Title of the invention : NEURO FUZZY SINGLE ENDED COMPUTER AIDED DIAGNOSIS FOR OCULAR DISEASE

(51) International classification	:G16H0050200000, G06T0007000000, G16H0050700000, G06N0005040000, G16H0030400000
(31) Priority Document No	:NA
(32) Priority Date	:NA
(33) Name of priority country	:NA
(86) International Application No	:NA
Filing Date	:NA
(87) International Publication No	: NA
(61) Patent of Addition to Application Number	:NA
Filing Date	:NA
(62) Divisional to Application Number	:NA
Filing Date	:NA

(71)**Name of Applicant :**
1)Dr. VE. Jayanthi
Address of Applicant :Professor & Head, Department of Biomedical Engineering PSNA college of Engineering and Technology, Kothandaramannagar, Dindigul, Tamilnadu, India 624622 Tamil Nadu India
2)Dr. D.M.D. Preethi
(72)**Name of Inventor :**
1)Dr. VE. Jayanthi
2)Dr. D.M.D. Preethi

(57) Abstract :
Biometrics uses irises to identify a person by enrolling the basic information. Human iris structure is not the same throughout the life span. Retinal structures are affected by various diseases such as exudate, cataract, and glaucoma and it€™s occurred due to many reasons like surgery, medication and diseases. Based on symptoms, clinicians can identified various diseases in the iris, then move to further steps like photography, scan for prediction. Single ended symptom based Neuro fuzzy computer aided diagnosis system is needed to assist the clinician€™s. As the result, a symptom based Neuro fuzzy computer aided diagnosis system is proposed to identify the type of disease in the iris. Blood flow, age, diabetics and stress are the four major symptoms are considered to identify the disease. Mamdani, Sugeno model and non-invasive methods are used to design a computer aided diagnosis. Adaptive network based fuzzy inference system (ANFIS) system predicts presence or the absence of disease. Neuro Fuzzy controller is proposed and sensitivity, specificity and accuracy of the system are evaluated with the help of clinical symptom dataset to measure the performance of the system.

No. of Pages : 16 No. of Claims : 6

(12) PATENT APPLICATION PUBLICATION
(19) INDIA
(22) Date of filing of Application :25/02/2021
(21) Application No.202141008013 A
(43) Publication Date : 05/03/2021

(54) Title of the invention : IOT BASED SMART MEDICINE DISPENSING SYSTEM IN HOSPITALS

(51) International classification	:G07F0017000000, G06Q0050220000, A61J0007000000, G16H0020130000, G16H0050800000
(31) Priority Document No	:NA
(32) Priority Date	:NA
(33) Name of priority country	:NA
(86) International Application No	:NA
Filing Date	:NA
(87) International Publication No	: NA
(61) Patent of Addition to Application Number	:NA
Filing Date	:NA
(62) Divisional to Application Number	:NA
Filing Date	:NA

(71)**Name of Applicant :**
1)Prof.Dr.K.Bhaskar Reddy,Sri Venkateswara College Of Pharmacy
Address of Applicant :Director, Centre For Pharmaceutical Nanotechnology, Sri Venkateswara College Of Pharmacy, RVS Nagar Chittoor Andhra Pradesh India 517127 Andhra Pradesh India
2)Prof.(Dr.)S.N.sahoo,Shri Venkateshwara University
3)Dr. Shyam Lal Verma,Noida Institute of Engineering & Technology
4)Helen Sha Diana,SDNB Vaishnav College for Women
5)Kotreshi SN,GM Institute of Technology
6)Ajay V P,Kumaraguru College of Technology
7)David S,Kumaraguru College of Technology
8)Dr. Santosh Wamanrao Suradkar,Ghulam Nabi Azad Arts, Comm and Sci College
9)C.John Paul,Alpha Arts and Science College
10)T.Swathi,G.Pulla Reddy Engineering College
11)Anup Purushottamrao Bhat,Amolakchand Mahavidyalaya
(72)**Name of Inventor :**
1)Prof.Dr.K.Bhaskar Reddy,Sri Venkateswara College Of Pharmacy
2)Prof.(Dr.)S.N.sahoo,Shri Venkateshwara University
3)Dr. Shyam Lal Verma,Noida Institute of Engineering & Technology
4)Helen Sha Diana,SDNB Vaishnav College for Women
5)Kotreshi SN,GM Institute of Technology
6)Ajay V P,Kumaraguru College of Technology
7)David S,Kumaraguru College of Technology
8)Dr. Santosh Wamanrao Suradkar,Ghulam Nabi Azad Arts, Comm and Sci College
9)C.John Paul,Alpha Arts and Science College
10)T.Swathi,G.Pulla Reddy Engineering College
11)Anup Purushottamrao Bhat,Amolakchand Mahavidyalaya

(57) Abstract :
In this pandemic era, technology dependent solutions are demanded for preventing the spread of contagious disease COVID-19 as the medical officers have themselves become victim to the disease while treating the patients. Eventually, the patients has to be cured which is possible by providing timely medication. This invention proposes an autonomous touchless medicine dispensing system for providing service to victims in the hospital ward based on the technology of Internet of Things along with IR sensors. Lack of experienced medical officers, also leads to huge death of human life. The proposed system is an innovative robotic mobile system able to provide timely medication to save human life to greater extent without the issue of pandemic spread. 3D modeling of the system is done using Pro- Engineer software. The system is able to detect specific patient using infrared technique which scans the unique digital code allocated for the patient bed. Dispensing of the medicine is done based on infrared counter where the medicines are dispensed based on doctor€™s prescription. Medicines are dispensed touchless in disposable containers to every patient autonomously at their ward itself. This system is efficient in providing immediate medication without any considerable delay to the victims without human intervention.

No. of Pages : 11 No. of Claims : 6

(12) PATENT APPLICATION PUBLICATION
(21) Application No.202141008020 A
(19) INDIA
(22) Date of filing of Application :25/02/2021
(43) Publication Date : 05/03/2021

(54) Title of the invention : UNIQUE GERMINATION PROCESS OF CASHEW SPROUTS

(51) International classification	:A23L0019200000, A61K0036220000, G06Q0050020000, F16D0069020000, A01G0031000000	(71)**Name of Applicant :** **1)Brijith Krishna M C** Address of Applicant :Krishna Nivas Ulikkal P O Kokkad Kannur Kerala Pin 670705 Mobile No: 9447178995 Email: mcbrijith@gmail.com Kerala India
(31) Priority Document No	:NA	(72)**Name of Inventor :**
(32) Priority Date	:NA	**1)Mrs Sreeshma P**
(33) Name of priority country	:NA	
(86) International Application No	:NA	
Filing Date	:NA	
(87) International Publication No	: NA	
(61) Patent of Addition to Application Number	:NA	
Filing Date	:NA	
(62) Divisional to Application Number	:NA	
Filing Date	:NA	

(57) Abstract :
The invention pertains to the field of Agriculture. More particularly, the invention pertains to waste to wealth. The outcome of invention is the drastic development of our future agripreneures and prepares them for their journey to success through the nutty idea of spouted cashew nuts with improved nutritional value. We standardized a unique process for sprouting of raw cashew seed to high nutritional cashew sprout and value addition of cashew sprout. These influence major sections of the farming society by creating a constructive entrepreneurial ecosystem. End result is we create intellectually empowered and transformed farmers to agripreneures. We come up with a standardized unique process for sprouting of raw cashew seed to high nutritional cashew sprout and value addition of cashew sprout. The sprouted green cashew cotyledons can be used in vegetable and fruit salads, milk shakes, pickles and curries. The monsoon cashew often drops the market price in Kerala. The late local varieties pull down the market price of black cashew. But the same can be diverted for cashew sprout production without affecting the quality of produce. A prototype for quality production of cashew sprout in controlled atmosphere and the whole process for sprouting was developed and standardized.

No. of Pages : 13 No. of Claims : 6

(12) PATENT APPLICATION PUBLICATION
(19) INDIA
(22) Date of filing of Application :25/02/2021
(21) Application No.202141008044 A
(43) Publication Date : 05/03/2021

(54) Title of the invention : AN ARTIFICIAL INTELLIGENCE BASED METHOD FOR SMART ENERGY OPTIMIZATION FOR MASSIVE INTERNET OF THINGS

(51) International classification	:H04L0029080000, H04W0004700000, G06Q0050060000, G06N0003120000, G05B0017020000
(31) Priority Document No	:NA
(32) Priority Date	:NA
(33) Name of priority country	:NA
(86) International Application No	:NA
Filing Date	:NA
(87) International Publication No	: NA
(61) Patent of Addition to Application Number	:NA
Filing Date	:NA
(62) Divisional to Application Number	:NA
Filing Date	:NA

(71)**Name of Applicant :**
1)C. P. THAMIL SELVI
Address of Applicant :W/o. M. PONRAJ, ASSOCIATE PROFEESSOR AND HEAD OF THE DEPARTMENT, DEPARTMENT OF COMPUTER SCIENCE AND ENGINEERING, V.S.B. COLLEGE OF ENGINEERING TECHNICAL CAMPUS, COIMBATORE -641107, TAMIL NADU, INDIA Tamil Nadu India
2)Dr. S. GAYATHRI DEVI
3)RAMYA JAYAKUMAR
4)NITHYA JAYAKUMAR
5)P SOWMYA
6)Dr. S GOKULAKRISHNAN
7)Dr. R PUSHPALAKSHMI
8)Dr. S RAMASAMY
9)Dr. R SIVAKAMI
10)K SELVA SHEELA
11)Dr. N PANDEESWARI
12)Dr. M JAIGANESH
13)Dr. D PRASANNA
14)Dr. M ANANDARAJ
15)L AMUDHA
(72)**Name of Inventor :**
1)C. P. THAMIL SELVI
2)Dr. S. GAYATHRI DEVI
3)RAMYA JAYAKUMAR
4)NITHYA JAYAKUMAR
5)P SOWMYA
6)Dr. S GOKULAKRISHNAN
7)Dr. R PUSHPALAKSHMI
8)Dr. S RAMASAMY
9)Dr. R SIVAKAMI
10)K SELVA SHEELA
11)Dr. N PANDEESWARI
12)Dr. M JAIGANESH
13)Dr. D PRASANNA
14)Dr. M ANANDARAJ
15)L AMUDHA

(57) Abstract :
The present invention relates to energy optimization for massive IoT devices through the integration of artificial intelligence. With billions of such devices operating constantly and transmitting and receiving data, there was a need to develop a model that can organize and control the energy consumption by these devices. The hardware aspects of energy consumption have been divided into four major parts. The models for each part were developed that can be used for evaluating the overall energy consumption. The software aspect of energy consumption introduces the multi-agent distributed intelligent system controlled under genetic algorithm. For an efficient energy management system of IoT device, the modelling and controlling is very necessary, else, unmanaged IoT devices will be an enormous burden on electric grids.

No. of Pages : 17 No. of Claims : 3

(12) PATENT APPLICATION PUBLICATION
(21) Application No.202141008086 A
(19) INDIA
(22) Date of filing of Application :25/02/2021
(43) Publication Date : 05/03/2021

(54) Title of the invention : INTERACTIVE MULTIMEDIA PERFORMANCE ASSESSMENT SYSTEM

(51) International classification	:G06Q0010060000, G09B0007020000, G06K0019040000, A61B0005050000, H04Q0011040000
(31) Priority Document No	:NA
(32) Priority Date	:NA
(33) Name of priority country	:NA
(86) International Application No	:NA
Filing Date	:NA
(87) International Publication No	: NA
(61) Patent of Addition to Application Number	:NA
Filing Date	:NA
(62) Divisional to Application Number	:NA
Filing Date	:NA

(71)**Name of Applicant :**
1)Dr Raghavi K Bhujang
Address of Applicant :Associate Professor, ISBR Business School, Electronic city, Bangalore. raghavikb@isbr.in 9886394833 Karnataka India
2)Dr Sonal Jain
3)Dr. Sumati Ramakrishna Gowda
4)Dr. D.M Mahesha
5)Dr.Poornima Y
6)Dr Natesh M
7)Dr. Loshma Gunisetti
8)Dr. Sindhu Menon
9)Dr,Piyush Kumar Pareek
(72)**Name of Inventor :**
1)Dr Raghavi K Bhujang
2)Dr Sonal Jain
3)Dr. Sumati Ramakrishna Gowda
4)Dr. D.M Mahesha
5)Dr.Poornima Y
6)Dr Natesh M
7)Dr. Loshma Gunisetti
8)Dr. Sindhu Menon
9)Dr,Piyush Kumar Pareek

(57) Abstract :
TITLE: Interactive multimedia performance assessment system ABSTRACT The system discloses a novel approach towards assessment of students using artificial intelligence and related methods thereof. Students presentation skills are fed to AI Module, using feature extraction techniques the strengths and weakness of presentation are identified and fed to the information module and further report is generated. The Invention introduces a fair means of student evaluation process using interactive multimedia system. The Invention addresses the issue of transparency in student evaluation process

No. of Pages : 11 No. of Claims : 3

(12) PATENT APPLICATION PUBLICATION
(21) Application No.202141008102 A
(19) INDIA
(22) Date of filing of Application :26/02/2021
(43) Publication Date : 05/03/2021

(54) Title of the invention : METHOD AND COMPOSITION OF MAKING PASTA WITH FOXTAIL MILLET AND GREEN GRAM FLOUR BLEND HAVING HIGH

(51) International classification	:A23L0007109000, A21D0002360000, A23L0019000000, A23L0033000000, A21D0013060000
(31) Priority Document No	:NA
(32) Priority Date	:NA
(33) Name of priority country	:NA
(86) International Application No	:NA
Filing Date	:NA
(87) International Publication No	: NA
(61) Patent of Addition to Application Number	:NA
Filing Date	:NA
(62) Divisional to Application Number	:NA
Filing Date	:NA

(71)**Name of Applicant :**
1) Dr. P. NAZNI
Address of Applicant :PROFESSOR AND HEAD DEPARTMENT OF NUTRITION AND DIETETICS, PERIYAR UNIVERSITY, SALEM, TAMIL NADU INDIA - 636011. Tamil Nadu India
(72)**Name of Inventor :**
1) Dr. P. NAZNI

(57) Abstract :
The proposed pasta formulations affect the food industry. In an embodiment, the pasta has a certain composition that involves adding 50 percent wheat flour, 40 percent dry weight foxtail millet flour. 5-9 percent of green gram flour and 1 to 5 percent of solatium nigrum fruit powder were applied to another embodiment. At the amount needed, water and salt were added. Both flours are blended for 5 min and then kneaded for around 20 min after adding the optimum amount of water. Based on guidelines, the quantity of water was determined (for milletand wheat flour). It was extruded using the ribbed tube die form when the dough function was optimum. The extruded pasta was collected in trays and then dried at 650C for around 3 hours in a food-grade dryer to obtain translucent pasta. At both macro and micro nutrient levels, the formulated pasta displayed excellent nutritional value. In comparison with the normal, the antioxidant activity and in vitro glycemic activity of the pasta showed a high antioxidant level with a low glycemic index. The highly antioxidant with low glycemic pasta was therefore a healthy nutritious food to fulfill the criteria for food protection for all age groups. These formulations of enriched pasta were comparatively higher than those of commercial brands available on the market

No. of Pages : 10 No. of Claims : 3

(12) PATENT APPLICATION PUBLICATION
(21) Application No.202141008103 A
(19) INDIA
(22) Date of filing of Application :26/02/2021
(43) Publication Date : 05/03/2021

(54) Title of the invention : IOT BASED SMART SCHEDULE REMAINDER AND WORK PROGRESS GENERATOR ON DAILY BASIS TO IMPROVE THE EMPLOYEES WORK EFFICIENCY

(51) International classification	:G06Q0010060000, G06Q0010100000, H04L0029080000, A61B0005160000, H04N0021840000
(31) Priority Document No	:NA
(32) Priority Date	:NA
(33) Name of priority country	:NA
(86) International Application No	:NA
Filing Date	:NA
(87) International Publication No	: NA
(61) Patent of Addition to Application Number	:NA
Filing Date	:NA
(62) Divisional to Application Number	:NA
Filing Date	:NA

(71)**Name of Applicant :**
1)Dr. Nagappan Govindarajan
Address of Applicant :Professor & Head, Department of Computer Science and Engineering, Saveetha Engineering College, Saveetha Nagar, Chennai - Bengaluru National Highways, Sriperumbadur Taluk, Chennai, Tamil Nadu 602105. Ph:9840662250 E-Mail: nagappan.cse@gmail.com Tamil Nadu India
2)Ms. Rohini Nagappan
(72)**Name of Inventor :**
1)Dr. Nagappan Govindarajan
2)Ms. Rohini Nagappan

(57) Abstract :
ABSTRACT OF THE INVENTION Employees Stress is the primary concern for many top most Multi-national companies since it affects the company€™s productivity and profit dramatically. Even though there are many tools in planning the employee€™s work schedule, there exists a chance to miss the commitments or work. The IoT based Smart Schedule Remainder application is used to integrate the entire major communication medium that is used in industries such as Email, WhatsApp and SMS together into a Cloud based smart IoT system. This smart IoT system notifies the employee about the planned schedule in prior by extracting information from the various communication platforms. Furthermore, two or more events which are scheduled with the same date and time are determined exactly and also help the employee to re-arrange the schedule accordingly in prior. The employees can update their work progress on daily-basis to keep track the required amount of time to complete the task. This feature helps the employee in predicting whether he/she can be able to complete the assigned within stipulated period of time or not. In addition to this, employees can also input their own schedule or program to receive alertness about the planned event in prior as similar to the work schedule.

No. of Pages : 11 No. of Claims : 6

(12) PATENT APPLICATION PUBLICATION
(21) Application No.202141008126 A
(19) INDIA
(22) Date of filing of Application :26/02/2021
(43) Publication Date : 05/03/2021

(54) Title of the invention : SYSTEM AND METHOD FOR REAL TIME MONITORING OF OPERATOR EFFECTIVENESS IN MANUFACTURING MACHINES

(51) International classification	:G05B0019418000, B60K0001020000, B60K0006365000, F16H0003720000, F16H0037080000
(31) Priority Document No	:NA
(32) Priority Date	:NA
(33) Name of priority country	:NA
(86) International Application No	:NA
Filing Date	:NA
(87) International Publication No	: NA
(61) Patent of Addition to Application Number	:NA
Filing Date	:NA
(62) Divisional to Application Number	:NA
Filing Date	:NA

(71)**Name of Applicant :**
1)M2IOT SOLUTIONS PRIVATE LIMITED
Address of Applicant :6/12, KVIC Nagar, Gowriwakkam, Chennai Tamil Nadu India
(72)**Name of Inventor :**
1)Murali Raghunathan
2)Mallikarjuna Reddy V

(57) Abstract :
SYSTEM AND METHOD FOR REAL TIME MONITORING OF OPERATOR EFFECTIVENESS IN MANUFACTURING MACHINES The present invention relates to a system for real time monitoring of operator effectiveness in a network of manufacturing machines which are electrically and non-electrically connected. More particularly, the present invention relates to a system for real time monitoring of operator effectiveness in a network of manufacturing machines in relation to Men, Material, Method and Machine. The system monitors operator effectiveness by networking plurality of Mechanical Machines, NC/CNC Machines, Pneumatic Machines of different control systems and make through WIFI and LAN ethernet without interfacing with any particular control system proprietary communication protocols. The system uses electrical interlock of signals to capture data in real time. Further, monitoring of operator effectiveness in a network of manufacturing machines helps organizations track their inefficiencies at every important aspect of the manufacturing process and plan improvements. Figure 1

No. of Pages : 38 No. of Claims : 12

(12) PATENT APPLICATION PUBLICATION
(21) Application No.202141008127 A
(19) INDIA
(22) Date of filing of Application :26/02/2021
(43) Publication Date : 05/03/2021

(54) Title of the invention : A WEARABLE AIR FILTRATION DEVICE

(51) International classification	:A41D0013110000, A42B0003220000, A62B0018040000, B01D0046000000, A61F0009020000
(31) Priority Document No	:NA
(32) Priority Date	:NA
(33) Name of priority country	:NA
(86) International Application No	:NA
Filing Date	:NA
(87) International Publication No	: NA
(61) Patent of Addition to Application Number	:NA
Filing Date	:NA
(62) Divisional to Application Number	:NA
Filing Date	:NA

(71)**Name of Applicant :**
1)VENKATESH PARTHASARTHY
Address of Applicant :MIG 2290, 5TH B MAIN ROAD, 3 PHASE, SATELLITE TOWN, YELAHANKA, BANGALORE, 560064, KARNATAKA, INDIA Karnataka India
(72)**Name of Inventor :**
1)VENKATESH PARTHASARTHY
2)PRADEEP VAMANA
3)ANAND TULSIDAS PAVASKAR

(57) Abstract :
A wearable air filtration device (10) is disclosed. The device includes a head gear (20) to be worn by a wearer. The device includes an air filtration unit (30) housed inside the head gear. The air filtration unit includes a high air intake fan (50) to pull external air at a predefined air flow rate through a nano filtration media (60). The nano filtration media filters pre-determined size of particles presents in the external air. The device includes a face shield (150) coupled to a front surface (160) of the head gear. The face shield includes a transparent visor (170) to cover face of the wearer. The face shield also includes a fabric seal (180) integrated with the transparent visor using a coupling means (190). The fabric seal provides sealing along a jawline and checks of the wearer. The fabric seal is coated with a nano material to filter exhaust air by eliminating bacteria and virus particles released by the wearer. FIG. 1

No. of Pages : 21 No. of Claims : 10

(12) PATENT APPLICATION PUBLICATION
(21) Application No.202141008128 A
(19) INDIA
(22) Date of filing of Application :26/02/2021
(43) Publication Date : 05/03/2021

(54) Title of the invention : SMART ASSET CARD WITH A SWITCH FOR ASSET MANAGEMENT BETWEEN CITIZENS, GOVERNMENT AND FINANCIAL SERVICES

(51) International classification	:G06Q0020400000, G06K0019077000, G06K0019070000, G06Q0040060000, G06Q0040020000
(31) Priority Document No	:NA
(32) Priority Date	:NA
(33) Name of priority country	:NA
(86) International Application No	:NA
Filing Date	:NA
(87) International Publication No	: NA
(61) Patent of Addition to Application Number	:NA
Filing Date	:NA
(62) Divisional to Application Number	:NA
Filing Date	:NA

(71)**Name of Applicant :**
1)IDESOL Solutions LLP
Address of Applicant :H.No.4-12-56/B, Himagiri Nagar Colony, Road No.3, Gandhamguda, Hydershakote (post), Hyderabad 500091, Telangana, India. Telangana India
(72)**Name of Inventor :**
1)PERALA RAGHAVENDRA CHAKRAPANI

(57) Abstract :
A smart asset card (100) with a switch (20) for asset management between citizens, government and financial services is disclosed. The contactless smart card (11) unit has a unique digital identification number (14) associated to an asset registration information, aNear Field Communication (NFC) Chip€□ (31), aEMV Chip€□ (12) aQR Code€□ (22), aSWITCH (20) placed at the front is switched ON/OFF for performing contactless payments or transactions. The asset document that is in paper format is transformed and stored in smart asset card (32) and act as a credit card with certain credit limit set by the government officials based on the market value of the asset maintained by the concerned authority from time to time within their system. The government officials can share the registered asset owner details along with the credit limit to the partner banks (64) by integrating the systems. Figure related to the abstract is FIG. 1, 2 & 3.

No. of Pages : 32 No. of Claims : 17

(12) PATENT APPLICATION PUBLICATION
(21) Application No.202141008152 A
(19) INDIA
(22) Date of filing of Application :26/02/2021
(43) Publication Date : 05/03/2021

(54) Title of the invention : SMART SEGREGATOR ALERT TRASH BIN

(51) International classification	:B65F0001140000, B65F0001000000, B02C0018000000, B65F0001160000, G06Q0010060000	(71)**Name of Applicant :** **1)Y.Bevish Jinila** Address of Applicant :1/254A, Patel Street, Chennai, Tamilnadu, India 600100. Tamil Nadu India **2)S.Prayla Shyry**
(31) Priority Document No	:NA	(72)**Name of Inventor :**
(32) Priority Date	:NA	**1)Y.Bevish Jinila**
(33) Name of priority country	:NA	**2)S.Prayla Shyry**
(86) International Application No	:NA	
Filing Date	:NA	
(87) International Publication No	: NA	
(61) Patent of Addition to Application Number	:NA	
Filing Date	:NA	
(62) Divisional to Application Number	:NA	
Filing Date	:NA	

(57) Abstract :
ABSTRACT In most parts of India, sweeper and rag-pickers are still considered inferior despite several laws have been put in place to bring dignity to their profession. No waste management program can be successful without the help of people because ultimately, they produce the wastes. Although people at home can split and store the waste in different bins, it is inconvenient to always segregate and store them. Moreover, it is difficult for rag-pickers to carry many bins from a single home for disposal. So, it is mandatory to segregate the waste in the home-side which gives better waste management ratio. Hence we propose a novel home based Smart Segregator Alert Trash Bin with capacitive, inductive and ultrasonic sensors to automatically segregate biodegradable, non bio-degradable waste and to notify the status of the bin to the Local Monitoring Unit. The outcome of the waste segregation at source improves collection efficiency and better processing of waste. The main objectives of this work is,¢ To segregate the waste (Bio and non-Bio degradable) at home in a single trash bin embedded with sensors¢ To enable social equality to the rag-pickers by automatic segregation of waste at source¢ To generate a report on daily basis of filled up garbage bins to the corporation employee¢ To integrate all the household garbage bins and to develop a smart application that generates an alert and helps the employee to collect the garbage by shortest path.

No. of Pages : 12 No. of Claims : 4

(12) PATENT APPLICATION PUBLICATION
(21) Application No.202141008189 A
(19) INDIA
(22) Date of filing of Application :26/02/2021
(43) Publication Date : 05/03/2021

(54) Title of the invention : AN OPTIMIZED BELLOW TO INCREASE THE EFFICIENCY AND STABILITY OF THE PIPE JOINTS

(51) International classification	:H05B0001020000, H05K0005060000, A43B0007140000, A61H0015000000, F16L0051020000	(71)**Name of Applicant :** **1)Dr.D.MURUGANANDAM** Address of Applicant :Plot No.28, Jagajeeva Ram Nagar, Selai Yur (Post),Chennai-600073 TamilNadu,India Tamil Nadu India **2)Dr.J.JAYAPRIYA**
(31) Priority Document No	:NA	**3)Dr.G. K. AYYADURAI**
(32) Priority Date	:NA	**4)Dr.S.RATHIKA**
(33) Name of priority country	:NA	**5)Dr.S.DAISYLIN ANBU SUJITHA**
(86) International Application No	:NA	**6)S.SUMATHI**
Filing Date	:NA	(72)**Name of Inventor :**
(87) International Publication No	: NA	**1)Dr.D.MURUGANANDAM**
(61) Patent of Addition to Application Number	:NA	**2)Dr.J.JAYAPRIYA**
Filing Date	:NA	**3)Dr.G. K. AYYADURAI**
(62) Divisional to Application Number	:NA	**4)Dr.S.RATHIKA**
Filing Date	:NA	**5)Dr.S.DAISYLIN ANBU SUJITHA**
		6)S.SUMATHI

(57) Abstract :
TITLE: An Optimized Bellow to Increase the Efficiency and Stability of the Pipe Joints The present invention is an Optimized Bellow to Increase the Efficiency and Stability of the Pipe Joints. The present invention provides a contact region (2) at both the edges with the help of support ring (3) and tie rod (1) thereby providing strong bond to the connected piping system (4) to prevent sliding or separation between the contact faces or edges. The design optimization established in this bellows (5) design increases stability to bellows and joints and the reduced weight reduces manufacturing costs.

No. of Pages : 13 No. of Claims : 1

(12) PATENT APPLICATION PUBLICATION
(21) Application No.202141008276 A
(19) INDIA
(22) Date of filing of Application :26/02/2021
(43) Publication Date : 05/03/2021

(54) Title of the invention : A NOVEL METHOD OF MALICIOUS DETECTION BY COACTIVE NEURO-FUZZY INFERENCE SYSTEM IN P2P COMPUTING NETWORK

(51) International classification	:H04L0029080000, H04L0029060000, H04L0012240000, G06F0021560000, G06N0005040000
(31) Priority Document No	:NA
(32) Priority Date	:NA
(33) Name of priority country	:NA
(86) International Application No	:NA
Filing Date	:NA
(87) International Publication No	: NA
(61) Patent of Addition to Application Number	:NA
Filing Date	:NA
(62) Divisional to Application Number	:NA
Filing Date	:NA

(71)**Name of Applicant :**
1)Dr.R.Jayavadivel
Address of Applicant :Associate Professor, Department of Computer Science and Engineering, Lovely Professional University, Jalandhar-Delhi, G.T. Road, Phagwara, Punjab, India. Pin Code: 144411 Punjab India
2)Dr.A.G.Ramu
3)Ms.Meesala Shobha Rani
4)Mr.Chunduru Anilkumar
5)Mr.Sathishkumar V E
6)Dr. Reddappa Hosur Nanji Reddy
7)Mr.Venkatesh B
8)Mr.S.Vengatesh Kumar
9)Dr.D.Hemanand
10)Ms.Lakshmi Sarvani Videla
(72)**Name of Inventor :**
1)Dr.R.Jayavadivel
2)Dr.A.G.Ramu
3)Ms.Meesala Shobha Rani
4)Mr.Chunduru Anilkumar
5)Mr.Sathishkumar V E
6)Dr. Reddappa Hosur Nanji Reddy
7)Mr.Venkatesh B
8)Mr.S.Vengatesh Kumar
9)Dr.D.Hemanand
10)Ms.Lakshmi Sarvani Videla

(57) Abstract :
The Peer to Peer (P2P) Computing Network is a distributed computer network in which the peers are the computers which are distributed among the network and connected to each other for exchanging the data with each other through Internet. Each peer in the network act as file server and client. The malicious Peers in the network perform inauthentic files uploading and downloading. These malicious Peers degrades the performance of P2P network with malicious behaviour such as inauthentic files uploading and downloading, hiding consistency, Rational Attacks, File Poisoning, Sybil Attack, and Eclipse Attack. The present invention disclosed herein is a Novel Method of Malicious Detection by Coactive Neuro-Fuzzy Inference System in P2P Computing Network comprising of: Training Module and Testing Module. The Training Module comprising of: Peers (201); Feature Extraction (202); Features Vector (203); Training (204); Trained Vector (205); used to train the malicious and non-malicious peers behaviour. The Testing Module comprising of: Test Peers (301); Feature Extraction (302); Features Vector (303); Testing (304); Classification (305); used to test the behaviour of the peer in the P2P Network. The present invention disclosed here detects the malicious peers in the P2P Computing Network by using Coactive Neuro-Fuzzy Inference System mechanism. The present invention disclosed here uses peer to peer network simulation environment in Network Simulator-2 (NS-2) platform. The present invention disclosed here can detect the malicious peers at the detection rate of 98.15% and Packet delivery ratio of 96.8%.

No. of Pages : 16 No. of Claims : 9

(12) PATENT APPLICATION PUBLICATION
(21) Application No.202141008296 A
(19) INDIA
(22) Date of filing of Application :26/02/2021
(43) Publication Date : 05/03/2021

(54) Title of the invention : AN INTELLIGENT AUTOMATIC KITCHEN DISHES CLEANING MACHINE

(51) International classification	:A47L0015420000, G01D0021020000, F24H0009200000, H04L0029080000, A61B0005024000	(71)**Name of Applicant :** **1)Dr. Kuppani Sathish** Address of Applicant :Professor, Department of CSE, Tirumala Engineering College, Jonnalagadda, Narasaraopet, Guntur, Andhra Pradesh, INDIA Andhra Pradesh India
(31) Priority Document No	:NA	**2)Dr. Bhanu Prakash Battula**
(32) Priority Date	:NA	**3)Dr. Sunanda Das**
(33) Name of priority country	:NA	**4)Mr. Manohar Jayampu**
(86) International Application No	:NA	**5)Dr. Vikram Neerugatti**
Filing Date	:NA	(72)**Name of Inventor :**
(87) International Publication No	: NA	**1)Dr. Kuppani Sathish**
(61) Patent of Addition to Application Number	:NA	**2)Dr. Bhanu Prakash Battula**
Filing Date	:NA	**3)Dr. Sunanda Das**
		4)Mr. Manohar Jayampu
(62) Divisional to Application Number	:NA	**5)Dr. Vikram Neerugatti**
Filing Date	:NA	

(57) Abstract :
The system is intended to clean and dry the kitchen utensils, and sense/measure various parameters in the dish washer such as Temperature of water, temperature inside the racks to clean the kitchen utensils, any abnormal vibration, status of the rack, working condition in the individual rack and as a whole machine, automatic diagnosis of the product, with the help of Thermal imaging or like imaging sensors, temperature sensor, Vibration sensors, PIR Sensors, Measuring devices, meters and such devices, connected to a Software residing in Mobile APP through Cloud and/or local server that has Machine Learning / AI algorithms based on the Practical Experience gained. It is used to clean the kitchen utensils automatically by applying the detergent/soap, hot water, to clean and dry the utensils. The Scope of such solution range for the places where ever required to clean the kitchen utensils, the place may be like home, restaurants, hotels, schools and canteens. The size of the product can be customized based on the customer needs.

No. of Pages : 15 No. of Claims : 4

(12) PATENT APPLICATION PUBLICATION
(21) Application No.202141008307 A
(19) INDIA
(22) Date of filing of Application :27/02/2021
(43) Publication Date : 05/03/2021

(54) Title of the invention : NEUROMODULATION-SLEEP APNEA

(51) International classification	:A61N0001360000, A61F0005560000, A61N0001050000, A61B0005080000, A61K0047100000
(31) Priority Document No	:NA
(32) Priority Date	:NA
(33) Name of priority country	:NA
(86) International Application No	:NA
Filing Date	:NA
(87) International Publication No	: NA
(61) Patent of Addition to Application Number	:NA
Filing Date	:NA
(62) Divisional to Application Number	:NA
Filing Date	:NA

(71)**Name of Applicant :**
1)Bharath Institute of Higher Education and Research
Address of Applicant :No.173, Agharam road, Selaiyur, Chennai - 600073. Tamil Nadu India
(72)**Name of Inventor :**
1)Dr. Nithesh

(57) Abstract :
ABSTRACT Neuromodulation-Sleep Apnea Sleep apnea is a very serious disease that affects millions of patients worldwide and this occurs in the muscles in your airway relax during the sleep, causing air way narrow or close during the breathing process. Neuromodulation is a method used for the treatment of sleep apnea to the patients. Sleep apnea is a disorder resulting in short periods of suffocation in sleep. Neuromodulation works by delivering an antispastic or pain relief agent directly to a target site, minimizing the dose needed and potential side effects.

No. of Pages : 15 No. of Claims : 2

(12) PATENT APPLICATION PUBLICATION
(19) INDIA
(22) Date of filing of Application :27/02/2021

(21) Application No.202141008336 A
(43) Publication Date : 05/03/2021

(54) Title of the invention : SELF HEALING COMPOSITE

(51) International classification	:C04B0111340000, C04B0020100000, C04B0028020000, C04B0111720000, C04B0014020000	(71)**Name of Applicant :** **1)Dr.T.Chandra Sekhara Reddy** Address of Applicant :Professor of Civil, Engineering Department, G Pulla Reddy Engineering College, Kurnool-518007, Andhra Pradesh, India. Andhra Pradesh India
(31) Priority Document No	:NA	**2)Mr.A.Raviteja**
(32) Priority Date	:NA	**3)Dr.C.Sashidhar**
(33) Name of priority country	:NA	(72)**Name of Inventor :**
(86) International Application No	:NA	**1)Dr.T.Chandra Sekhara Reddy**
Filing Date	:NA	**2)Mr.A.Raviteja**
(87) International Publication No	: NA	**3)Dr.C.Sashidhar**
(61) Patent of Addition to Application Number	:NA	
Filing Date	:NA	
(62) Divisional to Application Number	:NA	
Filing Date	:NA	

(57) Abstract :
ABSTRACT: Title: Self Healing Composite A self-repairing concrete includes crystalline admixture and silica fume, in which the crystalline admixture and silica fume are mixed for a fixed function of micro-cracks. The quality mixture ratio is: concrete/water=100:1-15:15-50. The manufacturing method is weighing a full amount of water in a container, adding crystalline admixture and silica fume, stirring; pouring the water into the mixing container, adding the corresponding quality of cement; stirring; adding sand and gravel filling materials, conducting worksite watering, volume for each time, vibrating, and air exhausting; until the paste filling mold.

No. of Pages : 17 No. of Claims : 10

(12) PATENT APPLICATION PUBLICATION
(21) Application No.202141008341 A
(19) INDIA
(22) Date of filing of Application :27/02/2021
(43) Publication Date : 05/03/2021

(54) Title of the invention : NOVEL INHIBITION COMPOSITION FOR SOLID ROCKET MOTORS

(51) International classification	:C09D0005080000, C08G0018690000, C08L0023140000, C06B0045100000, C08L0083040000
(31) Priority Document No	:NA
(32) Priority Date	:NA
(33) Name of priority country	:NA
(86) International Application No	:NA
Filing Date	:NA
(87) International Publication No	: NA
(61) Patent of Addition to Application Number	:NA
Filing Date	:NA
(62) Divisional to Application Number	:NA
Filing Date	:NA

(71)**Name of Applicant :**
1)Indian Space Research Organisation
Address of Applicant :Department of Space, Antariksh Bhavan, New BEL Road, Bangalore 560094, India Karnataka India

(72)**Name of Inventor :**
1)Ratheesh Sahadevan
2)Shaik Mujeeb
3)Bijeesh Chinnangath Asokan
4)SBM Guruvayurappan
5)Preethakumari Vijayamma
6)Suraj Sudhi
7)Muraleekrishnan Ramachandra Sharma
8)Elizabeth John

(57) Abstract :
The present invention relates to a novel inhibition composition for use in solid rocket motors comprising synthetic polymers hydroxyl-terminated polybutadiene (HTPB) and polypropylene glycol (PPG) with suitable additives and fillers which render the composition with increased tensile strength, non-hazardous and non-carcinogenic.

No. of Pages : 13 No. of Claims : 19

(12) PATENT APPLICATION PUBLICATION
(21) Application No.202141008343 A
(19) INDIA
(22) Date of filing of Application :27/02/2021
(43) Publication Date : 05/03/2021

(54) Title of the invention : SPEECH EHANCEMENT METHODOLOGY USING SIGN REGRESSOR BASED ACOUSTIC NOISE CANCELLER

(51) International classification	:G10L0021020800, G10L0021022400, H03H0021000000, G16H0050200000, H03D0001040000
(31) Priority Document No	:NA
(32) Priority Date	:NA
(33) Name of priority country	:NA
(86) International Application No	:NA
Filing Date	:NA
(87) International Publication No	: NA
(61) Patent of Addition to Application Number	:NA
Filing Date	:NA
(62) Divisional to Application Number	:NA
Filing Date	:NA

(71)**Name of Applicant :**
1)Md. Zia Ur Rahman
Address of Applicant :Dept. of E.C.E., Koneru Lakshmaiah Education Foundation, K L University, Green Fields, Vaddeswaram, Guntur, AP, India PIN: 522502 Andhra Pradesh India
(72)**Name of Inventor :**
1)Girika Jyoshna
2)Md. Zia Ur Rahman
3)Suman Maloji

(57) Abstract :
ABSTRACT SPEECH ENHANCEMENT METHODOLOGY USING SIGN REGRESSOR BASED ACOUSTIC NOISE CANCELLER Aspects of the present disclosure relate to speech enhancement methodology where extraction of high-resolution speech signals is an important task. Adaptive algorithms are frequently used to eliminate noise signals. For this adaptive algorithm reference signal is generated with help of singular spectrum analysis (SSA (104)). So that generated reference signal is given to Hybrid normalized noise canceller algorithm. With this noise canceller, noise signals are estimated and then it is subtracted from contaminated speech signal (102). By using steepest descent algorithm coefficients of adaptive weight (106) equation are updated. To minimize the error between estimated signal and different input levels corresponding adaptation process is designed. Further to reduce computational complexity sign regressor function is applied to normalized algorithm. Signal to noise ratio improvement (SNRI), excess mean square error (EMSE) and Misadjustment (MSD) are calculated for the proposed SSA based normalized adaptive algorithm. Hence, we get better quality of speech signal in terms of better SNRI, EMSE and MSD values. (FIG. 1 will be the reference figure)

No. of Pages : 22 No. of Claims : 7

(12) PATENT APPLICATION PUBLICATION
(21) Application No.202141008344 A
(19) INDIA
(22) Date of filing of Application :27/02/2021
(43) Publication Date : 05/03/2021

(54) Title of the invention : SPEECH EHANCEMENT METHODOLOGY USING SIGN REGRESSOR BASED ACOUSTIC NOISE CANCELLER

(51) International classification	:G10L0021020800, G10L0021021600, G10L0021027200, G10L0019000000, G10L0021020000
(31) Priority Document No	:NA
(32) Priority Date	:NA
(33) Name of priority country	:NA
(86) International Application No	:NA
Filing Date	:NA
(87) International Publication No	: NA
(61) Patent of Addition to Application Number	:NA
Filing Date	:NA
(62) Divisional to Application Number	:NA
Filing Date	:NA

(71)**Name of Applicant :**
1)Krishna Prasad Satamraju
Address of Applicant :Dept. of E.C.E., Vasireddy Venkatadri Institute of Technology, Nambur, Guntur (dt.), A.P., India, PIN:522508 Andhra Pradesh India
2)Md. Zia Ur Rahman
3)L Koteswara Rao
4)Riyazuddien Shaik
5)Shafi Shahsavar Mirza
(72)**Name of Inventor :**
1)Krishna Prasad Satamraju
2)Md. Zia Ur Rahman
3)L Koteswara Rao
4)Riyazuddien Shaik
5)Shafi Shahsavar Mirza

(57) Abstract :
ABSTRACT SYSTEM AND METHOD FOR REFERENCE FREE ADAPTIVE NOISE CANCELLER FOR HEARING AID In speech communication various types of noise distortion techniques are existed. Independent component analysis (ICA (110)) technique is used to separate noise signals from speech signal. But ICA (110) was not applied to single channel signals, as it demands that number of measured speech signals is greater than number extracted noise source signals. Due to this reason, singular spectrum analysis (SSA (108)) is employed to single channel signals then it maps to multi variate data, next ICA (110) was applied to separate the noise components from speech signal. Further sign regressor based modified normalized LMS(MNLMS) adaptive algorithm was proposed for extracting noise components from speech signal. Performance measures like signal to noise ratio, excess mean square error is calculated for various speech noises and then compared with exiting methods. (FIG. 1 will be the reference figure) FIG. 1 Block diagram of proposed SSA-ICA based MNLMS for speech enhancement.

No. of Pages : 21 No. of Claims : 8

(12) PATENT APPLICATION PUBLICATION
(21) Application No.202141008346 A
(19) INDIA
(22) Date of filing of Application :27/02/2021
(43) Publication Date : 05/03/2021

(54) Title of the invention : Obstructive Sleep Apnea (OSA)

(51) International classification	:A61F0005560000, A61B0005000000, A61N0001360000, A61M0016000000, A61B0005080000
(31) Priority Document No	:NA
(32) Priority Date	:NA
(33) Name of priority country	:NA
(86) International Application No	:PCT//
Filing Date	:01/01/1900
(87) International Publication No	: NA
(61) Patent of Addition to Application Number	:NA
Filing Date	:NA
(62) Divisional to Application Number	:NA
Filing Date	:NA

(71)**Name of Applicant :**
1)Bharath Institute of Higher Education and Research
Address of Applicant :No.173, Agharam road, Selaiyur, Chennai - 600073. Tamil Nadu India
(72)**Name of Inventor :**
1)Dr. Kumaran

(57) Abstract :
ABSTRACT Obstructive sleep apnea(OSA) Obstructive sleep apnea (OSA) is the most common sleep-related breathing disorder and is characterized by recurrent methods of complete or partial obstruction of the upper airway leading to reduced or absent breathing during sleep. Obstructive sleep apnea occurs when the muscles that support the soft tissues in your throat, such as your tongue and soft palate, temporarily relax. When these muscles relax, your airway is narrowed or closed, and breathing is momentarily cut off. Obstructive sleep apnea is a potentially serious sleep disorder. This invention discloses a device to be used to treat obstructive sleep apnea by causing one or more muscles of the upper respiratory tract to contract, thereby at least partially moving collapsed tissue out of the upper airway and allowing the patient to breathe normally during sleep.

No. of Pages : 16 No. of Claims : 2

(12) PATENT APPLICATION PUBLICATION
(21) Application No.202141008349 A
(19) INDIA
(22) Date of filing of Application :27/02/2021
(43) Publication Date : 05/03/2021

(54) Title of the invention : ARTIFICIAL PANCREAS WITH AUTOMATIC INSULIN INJECTION

(51) International classification	:A61B0005145000, A61M0005172000, A61M0005142000, A61B0005000000, A61M0005315000
(31) Priority Document No	:NA
(32) Priority Date	:NA
(33) Name of priority country	:NA
(86) International Application No	:NA
Filing Date	:NA
(87) International Publication No	: NA
(61) Patent of Addition to Application Number	:NA
Filing Date	:NA
(62) Divisional to Application Number	:NA
Filing Date	:NA

(71)**Name of Applicant :**
1)Bharath Institute of Higher Education and Research
Address of Applicant :No.173, Agharam road, Selaiyur, Chennai - 600073. Tamil Nadu India
(72)**Name of Inventor :**
1)Dr. Abijeeth

(57) Abstract :
ABSTRACT Artificial pancreas with automatic insulin injection Artificial pancreas technology has been developed to improve the day -to -day lives of people with diabetes. The artificial pancreas is an all in one device for diabetic patients to track the blood glucose level using continuous glucose monitor (CGM) and it automatically releases the insulin (fig2) into the body through the injection. This system replaces the test for analyzing the insulin level in the body and to use insulin by multiple daily injections. It is made up of an externally worn insulin pump which communicates wirelessly to a CGM chip on the skin. The CGM measures blood sugar levels and the result is fed into a small computer which calculates insulin level of the body. When the pancreas needs insulin it automatically delivers by the injection. The dose is delivered into the body to regulate the insulin level.

No. of Pages : 16 No. of Claims : 2

(12) PATENT APPLICATION PUBLICATION
(21) Application No.202141008351 A
(19) INDIA
(22) Date of filing of Application :27/02/2021
(43) Publication Date : 05/03/2021

(54) Title of the invention : IOT BASED SMART FARMING USING MACHINE LEARNING

(51) International classification	:G06Q0050020000, G06N0003040000, G06N0020000000, H04W0004380000, G06N0003080000
(31) Priority Document No	:NA
(32) Priority Date	:NA
(33) Name of priority country	:NA
(86) International Application No	:NA
Filing Date	:NA
(87) International Publication No	: NA
(61) Patent of Addition to Application Number	:NA
Filing Date	:NA
(62) Divisional to Application Number	:NA
Filing Date	:NA

(71)**Name of Applicant :**
1)Dr. P. Ranjith Kumar
Address of Applicant :Professor Department of Electronics and Communication Engineering PSR Engineering College Sivakasi, Tamilnadu Tamil Nadu India
2)Dr.KR.Ramela
3)Dr.Suresh C
4)Dr.R J kavitha
5)Ayain John
6)T.Graceshalini
(72)**Name of Inventor :**
1)Dr. P. Ranjith Kumar
2)Dr.KR.Ramela
3)Dr.Suresh C
4)Dr.R J kavitha
5)Ayain John
6)T.Graceshalini

(57) Abstract :
IoT usage could improve life for mankind and the entire world in agriculture. IoT-enabled agricultural production permits farms to monitor their goods and conditions in real-time. Farmers are better able to understand comprehensive dependency between conditions and crop quality with the aid of soil and crop sensors, aerial drone surveillance and farm mapping. Many examples of IoT innovations being leveraged in agriculture vary from flexible data processing and management systems to potential robot pollinators. The prediction of crop yield is extremely difficult due to its reliance on many factors including crop genotype, environmental conditions, management techniques and their interfaces. Precise yield prediction requires a basic overview of the key relationship between yield and those interacting factors and requires both detailed datasets and efficient algorithms to demonstrate that relationship. A machine learning environment based on environmental data is proposed using IoT for crop yield prediction. To collect such data, a wireless sensor network is set up and retrospectively uploaded to the cloud. We also rendered feature selection based on a trained machine learning model, which enhanced prediction accuracy successfully. Our calculative results showed that the model surpassed other common machine learning approaches significantly.

No. of Pages : 13 No. of Claims : 6

(12) PATENT APPLICATION PUBLICATION
(21) Application No.202141008364 A
(19) INDIA
(22) Date of filing of Application :27/02/2021
(43) Publication Date : 05/03/2021

(54) Title of the invention : Development of bismuth borate glasses co-doped with small concentrations of manganese oxide and zirconium oxide nanoparticles suitable for luminescent materials

(51) International classification	:G01N0021640000, H01S0003160000, C09K0011660000, H01L0033340000, H01S0005323000
(31) Priority Document No	:NA
(32) Priority Date	:NA
(33) Name of priority country	:NA
(86) International Application No	:PCT//
Filing Date	:01/01/1900
(87) International Publication No	: NA
(61) Patent of Addition to Application Number	:NA
Filing Date	:NA
(62) Divisional to Application Number	:NA
Filing Date	:NA

(71)**Name of Applicant :**
1)VALLURUPALLI NAGESWARA RAO VIGNANA JYOTHI INSTITUTE OF ENGINEERING AND TECHNOLOGY
Address of Applicant :Bachupally road VignanaJyothi Nagar, Pragathi Nagar, Nizampet (S.O), Hyderabad- 500090, Telangana State, India Telangana India
(72)**Name of Inventor :**
1)Dr. Linganaboina SrinivasaRao

(57) Abstract :
Five samples were prepared with the eutectic composition of 29Bi2O3-70B2O3-(1-x)ZrO2- xMnO2 (where, x = 0.00, 0.25, 0.5, 0.75 (in mol %). The Excitation spectra recorded for emission at 650 nm. The excitation wavelength is found to be 407 nm. The Photoluminescence spectra of the glasses were recorded by the excited wavelength 407 nm. The spectra exhibited emission bands at 440 nm, 540 nm, 650 nm and 758 nm. The emission bands at 540 nm (Green), 650 nm (Red) and 758 nm (Red) due to the transitions by 4T1†' 6A1 of Mn2+ ions in the crystal field of glasses. The emission band at 440 nm (Blue) due to transition of 3P1†'1S0of Bi3+ ions in the glasses. The three prime colors Red, Green and Blue can be emitted by these materials and wavelength of light emission in the visible band. Design of light emitting diodes Laser diodes of different colors is possible.

No. of Pages : 14 No. of Claims : 7

(12) PATENT APPLICATION PUBLICATION
(21) Application No.202141008366 A
(19) INDIA
(22) Date of filing of Application :27/02/2021
(43) Publication Date : 05/03/2021

(54) Title of the invention : EXTRACTION OF VESSELS FROM RETINAL FUNDUS IMAGES TO DETECT RETINAL DISORDERS USNG DEEP LEARNING METHODS

(51) International classification	:A61B0003120000, A61B0003140000, G06T0007110000, G06T0007000000, G06T0007136000
(31) Priority Document No	:NA
(32) Priority Date	:NA
(33) Name of priority country	:NA
(86) International Application No	:PCT//
Filing Date	:01/01/1900
(87) International Publication No	: NA
(61) Patent of Addition to Application Number	:NA
Filing Date	:NA
(62) Divisional to Application Number	:NA
Filing Date	:NA

(71)**Name of Applicant :**
1)Prof. Swarnalatha P
Address of Applicant :School of Computer Science and Engineering Vellore Institute of Technology Vellore 14 Tamil Nadu India
2)Prof. A.Anitha
3)Prof. Prabu S
4)Prof. Magesh G
5)Prof. M.Anbarasi
6)Mr. Balaji V
7)Prof. K. Govardhan
8)Prof. K.S.Sendhil Kumar
9)Prof. Yokesh Babu S.
10)Prof. Kannadasan
11)Prof. Arunkumar G
12)Prof. Siva shanmugam
(72)**Name of Inventor :**
1)Prof. Swarnalatha P
2)Prof. A.Anitha
3)Prof. Prabu S
4)Prof. Magesh G
5)Prof. M.Anbarasi
6)Mr. Balaji V
7)Prof. K. Govardhan
8)Prof. K.S.Sendhil Kumar
9)Prof. Yokesh Babu S.
10)Prof. Kannadasan
11)Prof. Arunkumar G
12)Prof. Siva shanmugam

(57) Abstract :
In recent decades, researchers have been attracted to diagnose several diseases by clinical significance of the segmentation of retinal blood vessels from fundus photos. As such, retinal blood vessel segmentation is an attractive area of research because it leads to retinal pictorial analysis and computerised diagnosis. It is also an integral element of any automatically diagnosed eye disease scheme. For several purposes, manual segmentation of the retinal fundus vascular tree is a repetitive activity. Second, there can be very little difference in the contrast between pixels of blood vessels and the background of fundus images. Second, the presence of noise and light variations can cause problems. Thirdly, changes in the blood vessel like distance, shape, branching angles and luminosity cannot be easily seen. Finally, in the context of retinal images the presence of lesions and haemorrhages may cause confusion. Automatic segmentation is therefore an integral requirement. Hence a segmentation-based algorithm based on ant colony optimization was proposed and implemented in a deep learning model. With suitable visual representations, the basic concepts of neural network modeling, their learning mechanisms coupled with the food foraging behavior observed in ant colony were used. The present innovation focused towards an efficient and meaningful extraction of vessels from retinal fundus images to detect retinal disorders which include diabetic retinopathy, age related macular disorders etc.

No. of Pages : 13 No. of Claims : 6

(12) PATENT APPLICATION PUBLICATION
(21) Application No.202141008371 A
(19) INDIA
(22) Date of filing of Application :27/02/2021
(43) Publication Date : 05/03/2021

(54) Title of the invention : AI BIOMETRIC VOTING SYSTEM

(51) International classification	:G06K0009000000, G07C0013000000, G06F0021830000, G06F0003048800, G06F0003048400	(71)**Name of Applicant :** **1)VISHAL** Address of Applicant :70/20 Sri Iyyappa Nagar, Anna Street, Chinmaya Nagar, Koyambedu, Chennai, Tamil Nadu- Tamil Nadu India
(31) Priority Document No	:NA	**2)Suschil Raj Singh**
(32) Priority Date	:NA	**3)Sudharsan**
(33) Name of priority country	:NA	**4)Sathiyan**
(86) International Application No	:PCT//	**5)K. Vijayalakshmi**
Filing Date	:01/01/1900	(72)**Name of Inventor :**
(87) International Publication No	: NA	**1)VISHAL**
(61) Patent of Addition to Application Number	:NA	**2)Suschil Raj Singh**
Filing Date	:NA	**3)Sudharsan**
(62) Divisional to Application Number	:NA	**4)Sathiyan**
Filing Date	:NA	**5)K. Vijayalakshmi**

(57) Abstract :
TITLE: AI BIOMETRIC VOTING SYSTEM The invention provides a biometric voting system, that includes at least one processor(101), a retina scanner (105), a fingerprint sensor(103), a camera (107), a cloud storage(115) configured to store voters data. The at least one processor(101) is configured to receive a user input from a first user and output a voting dashboard, control display of a plurality of options in the voting dashboard based on reception of the first user input. The processor(101) generates a voting link based on selection of the plurality of option and also controls the verification of second user based on the reception of the voting link. Once the verification is done, the processor displays candidate list to second user to cast the vote and receives second input from second user and also controls display of result data based on the second user input.

No. of Pages : 31 No. of Claims : 7

(12) PATENT APPLICATION PUBLICATION
(21) Application No.202141008380 A
(19) INDIA
(22) Date of filing of Application :27/02/2021
(43) Publication Date : 05/03/2021

(54) Title of the invention : SINGLE FUEL FILTER MEDIA TO MEET PARTICLE AND WATER SEPARATION EFFICIENCY

(51) International classification	:B01D0036000000, F02M0037220000, F02M0035020000, B01D0039200000, B01D0035300000
(31) Priority Document No	:NA
(32) Priority Date	:NA
(33) Name of priority country	:NA
(86) International Application No	:PCT// /
Filing Date	:01/01/1900
(87) International Publication No	: NA
(61) Patent of Addition to Application Number	:NA
Filing Date	:NA
(62) Divisional to Application Number	:NA
Filing Date	:NA

(71)**Name of Applicant :**
1)Dr. Rudresh M
Address of Applicant :Assistant Professor, Department of Aeronautical Engineering, Dayananda Sagar College of Engineering, Kumaraswamy Layout, Bangalore-560078 Karnataka India
2)Dr. Praveen Kumar M V
(72)**Name of Inventor :**
1)Mr. Manjunath T S
2)Dr. Nagaswarupa H P
3)Mr. Sevan Chandra M V
4)Dr. Rudresh M
5)Mrs. Poornima J G
6)Dr. Praveen Kumar M V
7)Dr. Veeresh Kumar GB

(57) Abstract :
The present fuel filter design with single stage (particle separation efficiency) in protect filter and single stage (particle and water separation efficiency) in main filter. To meet the filtration requirement we need two filters i.e. protect and main filter. Whereas protect filter takes care of particle separation efficiency and main filter takes care of particle and water separation requirement. However, the problem is the cost. With two filters, meeting the cost target of customer would have been very much impossible. For Passenger car application single filter is more than enough whereas for Commercial application two filters are mandatory to meet the requirement and this is due to the high vibration level in the vehicle which allows particle and water to migrate from fuel filter. Hence, the challenge here to meet the efficiency requirement with single fuel filter became very critical. Current invention focuses on the innovative design concept in fuel filter media to meet end of life requirement of particle and water separation efficiency in single fuel filter.

No. of Pages : 10 No. of Claims : 2

(12) PATENT APPLICATION PUBLICATION
(21) Application No.202141008386 A
(19) INDIA
(22) Date of filing of Application :27/02/2021
(43) Publication Date : 05/03/2021

(54) Title of the invention : DESIGN, ANALYSIS & DEVELOPMENT OF AN ADVANCED ECCENTRIC SHAFT FOR VIBRATING SCREEN

(51) International classification	:B07B0001280000, B07B0001420000, F16C0017200000, B06B0001160000, B07B0001460000
(31) Priority Document No	:NA
(32) Priority Date	:NA
(33) Name of priority country	:NA
(86) International Application No	:PCT//
Filing Date	:01/01/1900
(87) International Publication No	: NA
(61) Patent of Addition to Application Number	:NA
Filing Date	:NA
(62) Divisional to Application Number	:NA
Filing Date	:NA

(71)**Name of Applicant :**
1)Dr. Y. Rama Mohan Reddy, Associate Professor / Department of Mechanical Engineering, Srinivasa Ramanujan Institute of Technology
Address of Applicant :S/o Y. Lakshmi Narayana Reddy, No:35, Aishwarya villas Kadapa Road Tadipatri Andhra Pradesh India 515411 Andhra Pradesh India
2)Dr. D. Sai Chaitanya Kishore Associate Professor& HOD / Department of Mechanical Engineering, Srinivasa Ramanujan Institute of Technology. AP
3)Mr. B. Subba Reddy Assistant Professor / Department of Mechanical Engineering, Srinivasa Ramanujan Institute of Technology. AP
4)Mr. M. Peeru Naik Assistant Professor / Department of Mechanical Engineering, Srinivasa Ramanujan Institute of Technology., AP
5)Mr. L. Vamsi Krishna Reddy Assistant Professor / Department of Mechanical Engineering, Srinivasa Ramanujan Institute of Technology. AP
6)Mr. G. Srinivas Kumar Assistant Professor / Department of Mechanical Engineering, Srinivasa Ramanujan Institute of Technology. AP
(72)**Name of Inventor :**
1)Dr. Y. Rama Mohan Reddy, Associate Professor / Department of Mechanical Engineering, Srinivasa Ramanujan Institute of Technology
2)Dr. D. Sai Chaitanya Kishore Associate Professor& HOD / Department of Mechanical Engineering, Srinivasa Ramanujan Institute of Technology. AP
3)Mr. B. Subba Reddy Assistant Professor / Department of Mechanical Engineering, Srinivasa Ramanujan Institute of Technology. AP
4)Mr. M. Peeru Naik Assistant Professor / Department of Mechanical Engineering, Srinivasa Ramanujan Institute of Technology., AP
5)Mr. L. Vamsi Krishna Reddy Assistant Professor / Department of Mechanical Engineering, Srinivasa Ramanujan Institute of Technology. AP
6)Mr. G. Srinivas Kumar Assistant Professor / Department of Mechanical Engineering, Srinivasa Ramanujan Institute of Technology. AP

(57) Abstract :
ABSTRACT The aim of the project is to deal with the design and analysis of an eccentric shaft for an inclined vibrating screen machine, single deck inclined at an angle of 20 degrees with 1700 tons per hour capacity transmitting 10hp power at 800 rpm. An eccentric shaft is used in inclined vibrating screen. There is an advantage of using this method of vibration generation over the unbalanced flywheel method. The vibration of an unbalanced flywheel is very violent. This causes mechanical failure and structural damage to occur. When the shaft rotates under no-load conditions, twisting and bending will occur due to critical speed of the shaft and the transverse loads applied on the shaft. To compensate this bending and twisting, shaft is designed such that the frequency and speed of the shaft is within maximum limits. The theoretical calculations are done using standard design data procedure. The shear stress and bending stress are used in calculating the diameter of the shaft. Then a CAD model is made using the theoretical values of the shaft in SOLIDWORKS software. And analysis is made using ANSYS software. By analysis, we get to know the deformations on shaft due to simple harmonic vibrations and load, thus we get the maximum stresses and frequency of vibration that can act on the shaft.

No. of Pages : 19 No. of Claims : 6

(12) PATENT APPLICATION PUBLICATION
(21) Application No.202141008393 A
(19) INDIA
(22) Date of filing of Application :28/02/2021
(43) Publication Date : 05/03/2021

(54) Title of the invention : REGULATORY OF ECOSYSTEM SERVICE RESEARCH TRENDS AND METHODOLOGICAL APPROACHES FOR UNDERVALUED SERVICES

(51) International classification	:C12N0001200000, G01N0021350400, C07D0213380000, G06Q0010060000, G06N0005020000
(31) Priority Document No	:NA
(32) Priority Date	:NA
(33) Name of priority country	:NA
(86) International Application No	:NA
Filing Date	:NA
(87) International Publication No	: NA
(61) Patent of Addition to Application Number	:NA
Filing Date	:NA
(62) Divisional to Application Number	:NA
Filing Date	:NA

(71)**Name of Applicant :**
1)Dr. SURESH B
Address of Applicant :BAPUJI INSTITUTE OF ENGINEERING AND TECHNOLOGY, DAVANGERE 577 004, KARNATAKA, INDIA Karnataka India
2)Dr. S MANJAPPA
3)Dr. H. R. MALLIKARAJUNA
4)Dr. THOTAPPAIAH
5)HARSHAVARDHAN A
6)Dr JAYAPRAKASH D
7)RAMESH KRISHNAMURTHY
8)MARADI SANGRAMA NAYAKA
9)RAKESH N. R.
(72)**Name of Inventor :**
1)Dr. SURESH B
2)Dr. S MANJAPPA
3)Dr. H. R. MALLIKARAJUNA
4)Dr. THOTAPPAIAH
5)HARSHAVARDHAN A
6)Dr JAYAPRAKASH D
7)RAMESH KRISHNAMURTHY
8)MARADI SANGRAMA NAYAKA
9)RAKESH N. R.

(57) Abstract :
ABSTRACTREGULATORY OF ECOSYSTEM SERVICE RESEARCH TRENDS AND METHODOLOGICAL APPROACHES FOR UNDERVALUED SERVICES€ • Ecosystem services (ES) are growing fields of research. It helps to provide an inherent way to understand the synergy and trade-offs between human beings and their natural environment. Regulatory ecosystem services (RES) are significantly important to maintaining the world in which people can live, and control the negative effects of flood, disasters, and diseases. It can also provide regulatory services like ecosystem protection, human safety, and the provision of other ES. However, emerging ES decision-making agendas focus on ES that is tangible and has a direct link with human well-being. Thus, the attention given to ES is low due to its less tangible benefits and complexity to measure the benefits. There was also a lack of connecting knowledge generated on the benefits of RES with the national policy of natural resource management, inconsistency of ES classification, and methodological diversity. Therefore, scientific communities are promoted to link RES studies with human health. Besides, the researcher should give priority for the least studied ecosystems and its services, developing robust methodology, and proposing management options to enhance the regulatory services of ecosystems.

No. of Pages : 9 No. of Claims : 3

(12) PATENT APPLICATION PUBLICATION
(21) Application No.202141008395 A
(19) INDIA
(22) Date of filing of Application :28/02/2021
(43) Publication Date : 05/03/2021

(54) Title of the invention : BEAM˜HELD BELOW AND NEAR WATER SURFACE BY BUOYANT OBJECTS€™ FOR SUPPORTING WAVE POWER PLANTS

(51) International classification	:F03B0013180000, F03B0013140000, F03B0013200000, F03B0013220000, H02K0009190000	(71)**Name of Applicant :** **1)VOORADI RAJESHWARA PRASAD** Address of Applicant :V. RAJESHWARA PRASAD, House No: 2-4-118, Ramnagar street, Hanamkonda Town, Warangal (Urban) District, Telangana State, INDIA PIN Code: (506001) Telangana India
(31) Priority Document No	:NA	(72)**Name of Inventor :**
(32) Priority Date	:NA	**1)VOORADI RAJESHWARA PRASAD**
(33) Name of priority country	:NA	
(86) International Application No	:NA	
Filing Date	:NA	
(87) International Publication No	: NA	
(61) Patent of Addition to Application Number	:NA	
Filing Date	:NA	
(62) Divisional to Application Number	:NA	
Filing Date	:NA	

(57) Abstract :
The present invention named as Beam held below and near water surface by buoyant objects for supporting wave power plants relates to Physical Sciences. This device comprises following components. 1) Long beam for holding one or more sea-waves energy conversion devices. 2) Means for holding and supporting˜said long beam€™ below and adjacent to surface of sea-water. 3) Anchoring tie wires for anchoring said long beam€™s supporting means tobed level of sea, or to nearby elevated objects€□. 4)˜Sea waves energy conversion devices€™ supported by said long beam for conversion of energy of sea waves into dynamic energy or into any other useful form of energy. 5) Electrical or hydraulic power generation equipment for converting sea waves energy into electrical or hydraulic energy. This device is useful for holding sea wave energy conversion devices near surface of sea water for extracting maximum possible energy from sea waves kinetic energy.

No. of Pages : 51 No. of Claims : 11

(12) PATENT APPLICATION PUBLICATION
(21) Application No.202141008403 A
(19) INDIA
(22) Date of filing of Application :28/02/2021
(43) Publication Date : 05/03/2021

(54) Title of the invention : BEAM MOUNTED ON COLUMNS, FOR SUPPORTING SEA WAVE POWER PLANTS

(51) International classification	:F03B0013180000, F03B0013140000, F03B0013220000, F03B0013200000, H02K0009190000	(71)**Name of Applicant :** **1)VOORADI RAJESHWARA PRASAD** Address of Applicant :V. RAJESHWARA PRASAD, House No: 2-4-118, Ramnagar street, Hanamkonda Town, Warangal (Urban) District, Telangana State, INDIA PIN Code: (506001) Telangana India
(31) Priority Document No	:NA	
(32) Priority Date	:NA	(72)**Name of Inventor :** **1)VOORADI RAJESHWARA PRASAD**
(33) Name of priority country	:NA	
(86) International Application No	:NA	
Filing Date	:NA	
(87) International Publication No	: NA	
(61) Patent of Addition to Application Number	:NA	
Filing Date	:NA	
(62) Divisional to Application Number	:NA	
Filing Date	:NA	

(57) Abstract :
The novel sea wave energy conversion device named asBeam mounted on columns, for supporting sea wave power plants€ • relates to Physical Sciences. This device comprises following components. 1) Long beam for holding plurality of sea-waves energy conversion devices. 2) Means for holding˜said long beam€™ in stationary position adjacent to surface of sea-water. 3) Anchoring tie wires connected to said long beam€™s supporting means for anchoring those to bed level of sea, or to nearby elevated objects. 4)˜Sea waves energy conversion devices€™ supported by said long beam for conversion of energy of sea waves into dynamic energy or into any other useful form of energy. 5) Electrical or hydraulic power generation equipment provided for conversion of energy of sea waves into electrical or hydraulic energy. This device is useful for holding and supporting sea wave energy conversion devices near surface of sea water.

No. of Pages : 59 No. of Claims : 22

(12) PATENT APPLICATION PUBLICATION
(21) Application No.202141008408 A
(19) INDIA
(22) Date of filing of Application :28/02/2021
(43) Publication Date : 05/03/2021

(54) Title of the invention : A System and the optimal method for Fractal Image Compression of Satellite Images

(51) International classification	:G06K0009000000, G06T0017050000, G06T0009000000, G06T0005000000, G06K0009360000
(31) Priority Document No	:NA
(32) Priority Date	:NA
(33) Name of priority country	:NA
(86) International Application No	:PCT//
Filing Date	:01/01/1900
(87) International Publication No	: NA
(61) Patent of Addition to Application Number	:NA
Filing Date	:NA
(62) Divisional to Application Number	:NA
Filing Date	:NA

(71)**Name of Applicant :**
1)Dr.Shaik.Bajidvali
Address of Applicant :Associate Professor, Department of ECE, Narasaraopeta Engineering College (Autonomous), Yellamanda, Narasaraopet, Andhra Pradesh, India. Pin Code: 522601 Andhra Pradesh India
2)Dr.V.Venkata Rao
3)Dr.MD.Javeed Ahammed
4)Mr.K.Suresh Babu
(72)**Name of Inventor :**
1)Dr.Shaik.Bajidvali
2)Dr.V.Venkata Rao
3)Dr.MD.Javeed Ahammed
4)Mr.K.Suresh Babu

(57) Abstract :
The rapid growth of the Remote Sensing Technology increases the Satellite Images data which is a multispectral, multiresolution and high dimensional data required more storage disk space. The satellite Images data is an important source of geographic information about the natural resources mapping, natural resources monitoring and disaster management. The storage disk space required to store this satellite Images data can be decreased by the Image Compression. Reduction in the Storage disk Space also leads to the increased speed of transmission of Satellite Images Data. The fractals are the self similar and non-regular geometric shapes of the image in which each similar part has the similar statistical features. The pixels in an image are encoded in image compression, whereas the similar image structures are compressed in Fractal Image Compression. The satellite images are high dimensional and having self similar regions in the image to be compressed to reduce the storage disk space required. The present invention disclosed herein is a System and the optimal method for Fractal Image Compression of Satellite Images comprising of: Input Satellite Image (201); Colour Converter (202); Partition (203); Optimization (204); Mapping (205); Affine Transform (206); Decompression (207); and Performance (208); provides an effective optimum method for enhancing the fractal image compression of satellite images. The present invention disclosed herein performs the fractal image compression with compression ratio of 49.13%, Mean Square error of 11.43dB, Peak Signal to Noise Ratio of 38.4dB, and Structural Similarity Index of 0.9835. The present invention disclosed herein is implemented on Matlab R2019a, a 512512 satellite image is considered from the IRS-1D (LISS III) satellite Dataset.

No. of Pages : 15 No. of Claims : 9

(12) PATENT APPLICATION PUBLICATION
(21) Application No.202141008410 A
(19) INDIA
(22) Date of filing of Application :01/03/2021
(43) Publication Date : 05/03/2021

(54) Title of the invention :SEA WAVES POWER PLANT CONSISTING˜HORIZONTAL SHAFT WITH HINGED BLADES€™ AND SUPPORTED OVER BUOYANT OBJECTS€ •

(51) International classification	:F03B0013180000, F03G0003000000, B63B0021500000, F03B0017040000, A61B0006000000
(31) Priority Document No	:NA
(32) Priority Date	:NA
(33) Name of priority country	:NA
(86) International Application No	:NA
Filing Date	:NA
(87) International Publication No	: NA
(61) Patent of Addition to Application Number	:NA
Filing Date	:NA
(62) Divisional to Application Number	:NA
Filing Date	:NA

(71)**Name of Applicant :**
1)VOORADI RAJESHWARA PRASAD
Address of Applicant :V. RAJESHWARA PRASAD, House No: 2-4-118, Ramnagar street, Hanamkonda Town, Warangal (Urban) District, Telangana State, INDIA PIN Code: (506001) Telangana India
(72)**Name of Inventor :**
1)VOORADI RAJESHWARA PRASAD

(57) Abstract :
A novel device for power generation from sea-waves named asSea waves power plant consisting˜horizontal shaft with hinged blades€™ and supported over buoyant objects€ • relates to Physical Sciences. This device comprises following components. 1) One or more long beams or shafts. 2)˜Plurality of sets of radial arms fitted to said shaft€™ at equal angular intervals all around said shaft. 3)˜Plurality of long blades attached to said radial arms outer ends as parallel to said shaft€™ at equal angular intervals all around said shaft. 4)˜Buoyant means€™ provided to support the shaft adjacent to surface of sea water€™ such that˜said device is in submerged condition up to top level of vertically held upper blade, or said shaft is in floating condition€™. 5) Detachable anchoring tie wires provided to anchor said buoyant object to sea bed or to nearby heavy object. 6)˜Detachable€™ columns attached through extendable sets of telescopic pipes or with other vertically movable attaching means provided to hold and support outer ends of said shaft to allow upward and downward movement of said shaft along with buoyant objects holding and supporting it. 7) Electrical or hydraulic power generation equipment for generation and transmission of generated power. This novel device is useful for conversion of energy of sea-waves into dynamic energy and other useful forms of energy.

No. of Pages : 48 No. of Claims : 17

(12) PATENT APPLICATION PUBLICATION
(19) INDIA
(22) Date of filing of Application :01/03/2021
(21) Application No.202141008435 A
(43) Publication Date : 05/03/2021

(54) Title of the invention : A DEVICE FOR DETERMINING DISINTEGRATION TIME OF A PHARMACEUTICAL THIN FILM

(51) International classification	:A61K0009000000, G01N0013000000, A61K0047380000, A61K0047260000, A61K0009700000
(31) Priority Document No	:NA
(32) Priority Date	:NA
(33) Name of priority country	:NA
(86) International Application No	:NA
Filing Date	:NA
(87) International Publication No	: NA
(61) Patent of Addition to Application Number	:NA
Filing Date	:NA
(62) Divisional to Application Number	:NA
Filing Date	:NA

(71)**Name of Applicant :**
1)JSS Academy of Higher Education and Research
Address of Applicant :Bannimantap Road, Sri Shivarathreeshwara Nagara, Bannimantap A Layout, Bannimantap, Mysuru 570 015, Karnataka, India. Karnataka India
(72)**Name of Inventor :**
1)Maram Suresh Gupta
2)Tegginmat Pramod Kumar

(57) Abstract :
Characterization of pharmaceutical thin films loaded with active pharmaceutical ingredients is critical to gain the end-user compliance and pharmacotherapy. Improper characterization of disintegration time will lead to spitting of the film by the end-user. The existing characterization methods suffer from various problems. For instance, failure in accurately predicting the start and end disintegration time of the pharmaceutical thin film as they employ manual methods using a stop-watch. Accordingly, the present disclosure provides a sensor based disintegration test apparatus that employs LDR-LED for predicting both the start and end disintegration time of pharmaceutical thin film. The disintegration time calculated help in predicting the quality of the film and offers insights about the performance of the film dosage form in end-users.

No. of Pages : 26 No. of Claims : 10

(12) PATENT APPLICATION PUBLICATION
(21) Application No.202141008443 A
(19) INDIA
(22) Date of filing of Application :01/03/2021
(43) Publication Date : 05/03/2021

(54) Title of the invention : RAPID TRANSACTION TECHNIQUE USING FLEXIBLE BLOCKCHAIN CONFIGURATION IN INDUSTRIAL IOT NETWORKS

(51) International classification	:H04L0029060000, H04L0029080000, G06Q0010040000, G06F0030150000, H04W0004700000
(31) Priority Document No	:NA
(32) Priority Date	:NA
(33) Name of priority country	:NA
(86) International Application No	:NA
Filing Date	:NA
(87) International Publication No	: NA
(61) Patent of Addition to Application Number	:NA
Filing Date	:NA
(62) Divisional to Application Number	:NA
Filing Date	:NA

(71)**Name of Applicant :**
1)Dr. S. Geetha
Address of Applicant :Associate Professor, ISE Department, CMR Institute of Technology, Bangalore. Karnataka India
2)Dr.C. Pretty Diana Cyril
3)Dr . S.Chidambaram
4)Mrs. Priyanka R
5)R. Geetha
6)Ms. Deepa V
(72)**Name of Inventor :**
1)Dr. S. Geetha
2)Dr.C. Pretty Diana Cyril
3)Dr . S.Chidambaram
4)Mrs. Priyanka R
5)R. Geetha
6)Ms. Deepa V

(57) Abstract :
Industrial IoT networks provide a quality paradigm for analysing machine data for the smart evaluation of product outcomes from machinery equipment. Recently, IIoT structure influence the Communicating Things Network (CTN) for the rapid circulation of real-time sensed data (machine) for effective analysis and prediction of system accuracy which improves the product visibility and security aspects for vulnerability. Because many IoT devices are active for data sharing within the industry or between industries branches located in the different regions in the world. It brings easy for getting data and do all mandatory requirements need for the product quality check. However, malicious interference is come into play due to a large number of the active interconnection of IoT devices. It is very much indeed to have product boosting capability, high-level security protection, and accommodate artificial intelligence for soft decision making before and after the product development. In this work, a flexible blockchain configuration model is developed and superimposed on rapid transaction technique for IIoT Networks. It retains a collection of the maximum number of sensitive data and induces high-security protocol in presence of unauthenticated interference. It gives high prediction accuracy and significantly reduces the number of unwanted data in the cloud. Inbuilt security defender for giving proper authentication before enters data in the cloud unit. It influences an efficient machine learning algorithm, thus, supports the high prediction of earlier product fault and control decision about uncertainty condition. The data processing function is minimized by establishing two separate layers maintained between the local sensing unit and cloud where data sort out is carried. The flexible blockchain configuration model and superimposed rapid transaction technique gives maximize performance accuracy for industrial IoT networks which support secured data storage and accessibility. Thus, create real-time data monitoring and maximizing the indoor user's comfort.

No. of Pages : 16 No. of Claims : 5

(12) PATENT APPLICATION PUBLICATION
(19) INDIA
(22) Date of filing of Application :01/03/2021
(21) Application No.202141008444 A
(43) Publication Date : 05/03/2021

(54) Title of the invention : INTELLIGENT MOBILITY ROBOTIC DEVICE FOR LOCOMOTION OF PHYSICALLY CHALLENGED PEOPLE

(51) International classification	:A61G0005040000, G05D0001020000, G06Q0010020000, A61H0003040000, A61G0005140000
(31) Priority Document No	:NA
(32) Priority Date	:NA
(33) Name of priority country	:NA
(86) International Application No	:NA
Filing Date	:NA
(87) International Publication No	: NA
(61) Patent of Addition to Application Number	:NA
Filing Date	:NA
(62) Divisional to Application Number	:NA
Filing Date	:NA

(71)**Name of Applicant :**
1)Dr.K.Thenmozhi
Address of Applicant :Assistant Professor, Department of Computer Science, Karpagam Academy of Higher Education, Coimbatore-641021, Tamil Nadu, India. Tamil Nadu India
2)Mrs. K. Kanimozhi
3)Ms. Sana Tak
4)Dr. Padmavati Shrivastava
5)Dr Abdullah Al-Shehri
6)Dr Sharick Shamsi
7)Shabana Khan
8)K Nanthini
9)Dr.Nirmala C R
10)Dr.Roopa G M
11)Dr. Chethana Prakash
12)Dr.S.Balamurugan
(72)**Name of Inventor :**
1)Dr.K.Thenmozhi
2)Mrs. K. Kanimozhi
3)Ms. Sana Tak
4)Dr. Padmavati Shrivastava
5)Dr Abdullah Al-Shehri
6)Dr Sharick Shamsi
7)Shabana Khan
8)K Nanthini
9)Dr.Nirmala C R
10)Dr.Roopa G M
11)Dr. Chethana Prakash
12)Dr.S.Balamurugan

(57) Abstract :
The Intelligent Mobility Robotic Device for Locomotion of Physically Challenged People (IMRD) helps physically challenged people to make use of the IMRD in an efficient and easy to use mobility vehicle. The flexible user sitting seat is used to sit by the user while moving on the vehicle. The elastic belt holder is used to hold the user with the seat and leg with the stand of the user. The robotic vehicle's front stand and hand holder are for support to the user while standing and moving on the vehicle. The smart steering, joystick, and control buttons are used to move the vehicle by the user. The intelligent tank wheel is used to run the vehicle on the steps by the user. The robotic jack is used to lift the locomotion vehicle while riding the vehicle on the steps for balancing. The intelligent IMRD control unit helps to monitors and supports the successful functioning of the whole IMRD system. By using this IMRD, physically challenged people can make use of the IMRD in an efficient and easy-to-use vehicle without other person's assistance.

No. of Pages : 16 No. of Claims : 3

(12) PATENT APPLICATION PUBLICATION
(21) Application No.202141008506 A
(19) INDIA
(22) Date of filing of Application :01/03/2021
(43) Publication Date : 05/03/2021

(54) Title of the invention : SMART COMMUNICATION VIA POWER LINE IN MINING

(51) International classification	:H04B0003540000, G01B0007020000, H04L0027200000, G01V0001280000, H04B0010800000
(31) Priority Document No	:NA
(32) Priority Date	:NA
(33) Name of priority country	:NA
(86) International Application No	:NA
Filing Date	:NA
(87) International Publication No	: NA
(61) Patent of Addition to Application Number	:NA
Filing Date	:NA
(62) Divisional to Application Number	:NA
Filing Date	:NA

(71)**Name of Applicant :**
1)Ranjith. L.N
Address of Applicant :A2, Sri Sendur Flats, Adaikala Nagar, Hasthampatti, Salem, Tamil Nadu- 636007, India Tamil Nadu India

(72)**Name of Inventor :**
1)Ranjith. L.N
2)Lalnunsiama Fanai
3)Kuenga Choeden
4)Sanjay Kumar. S
5)Paul Prasna Kumar

(57) Abstract :
ABSTRACT Smart Communication via Power Line in Mining The invention relates to a system and a method for Power Line Communication. The system comprises a plurality of sensors; a data conversion module for converting data detected by said plurality of sensors from digital to analog form; a transmission module, wherein said transmission module is configured to transmit the converted data from one or more power transmission lines present in the Underground/ surface Coal/Metal Mines to one or more receiver modules; and displaying said converted data after converting said data to digital form. Furthermore, a method is also disclosed implementing the method as disclosed to enable power line communication in mines. [Figure 1]

No. of Pages : 30 No. of Claims : 9

(12) PATENT APPLICATION PUBLICATION
(21) Application No.202141008525 A
(19) INDIA
(22) Date of filing of Application :01/03/2021
(43) Publication Date : 05/03/2021

(54) Title of the invention :LOW-COST ANIMAL LIFTER TO ASSIST CATTLE TREATMENT€ • .

(51) International classification	:A61D0003000000, B60N0002160000, A01K0015000000, A61D0007000000, A01K0029000000	(71)**Name of Applicant :** **1)Rekhapalli Environmental Solutions & Technologies Private Limited** Address of Applicant :H. No:2-15/1, Vijjeswaram, West Godavari District -534302 Andhra Pradesh India
(31) Priority Document No	:NA	(72)**Name of Inventor :**
(32) Priority Date	:NA	**1)Rekapalli Narasimha Rao,**
(33) Name of priority country	:NA	**2)Dr G. Gowtham**
(86) International Application No	:NA	**3)Rekapalli Bala Manohar Swamy**
Filing Date	:NA	**4)Rekhapalli Karthik**
(87) International Publication No	: NA	
(61) Patent of Addition to Application Number	:NA	
Filing Date	:NA	
(62) Divisional to Application Number	:NA	
Filing Date	:NA	

(57) Abstract :
Low-cost Animal lifter Device comprising Upper cross Arms of 78€ Long , Lower Cross arms of 78€ Long , Vertical Columns are of long 89€ • are connected by Wheels,Bolts,Reduction Gear Box, chain.The Lifting Fabric made up of High-density polypropylene (HDPP), UV Treated, non-absorbable of any water or any other fluid and can be cleaned with normal detergent and water.¢The Principle use of this Invention is the Animal Lifter Device effectively lift the animal either side (fore or hind portion or both).The other use of this Invention is the to assist Veterinary doctors for their treatment purpose as surgical bed for Animals and it is affordable to common farmers. Key words : Cattle, Animal lifter, Veterinary

No. of Pages : 17 No. of Claims : 6

(12) PATENT APPLICATION PUBLICATION
(21) Application No.202141008550 A
(19) INDIA
(22) Date of filing of Application :01/03/2021
(43) Publication Date : 05/03/2021

(54) Title of the invention : REMOVING A DIGITAL SIGNAL DISCONNECTION DURING CONTINUITY

(51) International classification	:G06F0008650000, H04L0029060000, G08C0025000000, A01N0041060000, G06F0011000000	(71)**Name of Applicant :** **1)S.RAVISANKAR** Address of Applicant :294, FOURTH CROSS STREET, PALANI ANDAVAR NAGAR, PALANI, DINDIGUL DISTRICT Tamil Nadu India
(31) Priority Document No	:NA	(72)**Name of Inventor :**
(32) Priority Date	:NA	**1)S.RAVISANKAR**
(33) Name of priority country	:NA	
(86) International Application No	:NA	
Filing Date	:NA	
(87) International Publication No	: NA	
(61) Patent of Addition to Application Number	:NA	
Filing Date	:NA	
(62) Divisional to Application Number	:NA	
Filing Date	:NA	

(57) Abstract :
ABSTRACT A digital signal characteristic include a change in voltage, and the time at which it occurs. Digital signals do not produce noise. Examples of digital signals are, Computers, Digital phones and etcetera. The digital signals are transmitted through electromagnetic waves. The data are represented in electromagnetic signal. The data transmitted may be digital messages originating from a data source (a computer or key board). The digital signals can be used to store data. The disconnection in a signal will enable the following in the data transfer: 1. Failure in data transmission. 2. Loss of data. 3. Weak signal handling. 4. Connection issued. 5. Cable or hardware faults. 6. Too much interference. The hardware problems are to be identified for the stability of the hardware devices connected to a computer network system. The solution to the problem is arrived by getting an access to the counter/register of the microprocessor design of the computer product. Then, performing a hardware update or a software update using the representation of a number 0 (zero) in a computer product. This representation of a number 0 (zero) is specified in angular characteristics or dimensions. This will enable to remove a digital signal disconnection during continuity. The invention belongs to the technical fields of computer science, computer science engineering, computer applications, computer-aided applications, Information technology, Electrical and Electronics engineering, Instrumentation engineering, space science and space technologies. The principal use(s) of this invention are in - 1. Science and Engineering industry sector. 2. Communication, Interface and Integration process. 3. Environmental solution. 4. Space research solutions

No. of Pages : 20 No. of Claims : 8

(12) PATENT APPLICATION PUBLICATION
(21) Application No.202141008568 A
(19) INDIA
(22) Date of filing of Application :01/03/2021
(43) Publication Date : 05/03/2021

(54) Title of the invention : MATERNAL HEART BEAT MONITOR FOR GROWING BABY IN WOMB

(51) International classification	:A61B0005000000, A61B0007040000, A61B0005024000, A61B0008020000, A61B0008080000
(31) Priority Document No	:NA
(32) Priority Date	:NA
(33) Name of priority country	:NA
(86) International Application No	:NA
Filing Date	:NA
(87) International Publication No	: NA
(61) Patent of Addition to Application Number	:NA
Filing Date	:NA
(62) Divisional to Application Number	:NA
Filing Date	:NA

(71)**Name of Applicant :**
1)Bharath Institute of Higher Education and Research
Address of Applicant :No.173, Agharam road, Selaiyur, Chennai - 600073. Tamil Nadu India
(72)**Name of Inventor :**
1)Dr. Abarna

(57) Abstract :
ABSTRACT Maternal heart beat monitor for growing baby in womb This invention discloses a fetal heart monitoring device includes a channel to receive a first signal representative of acoustic energy principally from a maternal heartbeat and a second signal representative of acoustic energy including a fetal heart beat. The device comprises a computing device including a processor, a memory operatively coupled to the processor, and non-volatile storage operatively coupled to the processor. The non-volatile storage has a computer program including instructions to cause the processor to process the first and second electrical signals into an electrical signal representative of the acoustic energy emitted by the fetal heart. The heart rate of the fetus is checked by the heart beat monitoring device, the sensor in the device transmits the electrical signal to the transmitter and it gives the heart beat rate in the connected device.

No. of Pages : 16 No. of Claims : 1

(12) PATENT APPLICATION PUBLICATION
(21) Application No.202141008587 A
(19) INDIA
(22) Date of filing of Application :01/03/2021
(43) Publication Date : 05/03/2021

(54) Title of the invention : SYSTEM AND METHOD FOR PROVIDING ACCENTED AND DOMAIN LOCALISED SPEECH TO TEXT TRANSCRIPTION

(51) International classification	:G10L0015260000, G06N0003040000, G10L0013080000, G06N0007000000, G10L0017000000	(71)**Name of Applicant :** **1)Shubu Artificial Intelligence Private Limited** Address of Applicant :A 1072, Assetz East Point, Bhoganahalli Village, Varthur Hobli, Bangalore, Karnataka Karnataka India
(31) Priority Document No	:NA	(72)**Name of Inventor :**
(32) Priority Date	:NA	**1)Vinay Vivek Phadnis**
(33) Name of priority country	:NA	**2)Amar Kumar Dani**
(86) International Application No	:NA	**3)Anuj Vijay Mokashi**
Filing Date	:NA	
(87) International Publication No	: NA	
(61) Patent of Addition to Application Number	:NA	
Filing Date	:NA	
(62) Divisional to Application Number	:NA	
Filing Date	:NA	

(57) Abstract :
The present disclosure provides a system and method for speech to text transcription. The method includes: building audio model specific to users accents wherein the audio model is selected based on the users Accent pre-stored audio data; building contextually aware neural network model, wherein the model is trained using a first set of words; receiving speech data to convert it into a first code; processing the first code to convert it into a second code and to load both the models in an inference model loader; generating, by the audio model, a first text data based on inference from the second code; analysing, by the contextually aware neural network model, contexts of the first text data to generate a text output and to iteratively correct the generated text output; and classifying, by a classification tool, the text output by implementing a non-machine learning based validation architecture.

No. of Pages : 32 No. of Claims : 26

(12) PATENT APPLICATION PUBLICATION
(21) Application No.202141008604 A
(19) INDIA
(22) Date of filing of Application :01/03/2021
(43) Publication Date : 05/03/2021

(54) Title of the invention : AUTO HEART BEAT MONITORING SYSTEM WITH FIRST AID TREATMENT SYSTEM

(51) International classification	:A61B0005024000, A61B0005000000, G06Q0050220000, G16H0010600000, A61B0005010000
(31) Priority Document No	:NA
(32) Priority Date	:NA
(33) Name of priority country	:NA
(86) International Application No	:NA
Filing Date	:NA
(87) International Publication No	: NA
(61) Patent of Addition to Application Number	:NA
Filing Date	:NA
(62) Divisional to Application Number	:NA
Filing Date	:NA

(71)**Name of Applicant :**
1)Bharath Institute of Higher Education and Research
Address of Applicant :No.173, Agharam road, Selaiyur, Chennai - 600073 Tamil Nadu India
(72)**Name of Inventor :**
1)Dr. Arul Murugan

(57) Abstract :
ABSTRACT Auto Heart Beat Monitoring System with First Aid Treatment System This system is based on a wireless heartbeat monitoring system with the first aid treatment for the heart attack patients. This system is designed for monitoring the patient in real time and to the treat them. Wireless system is used to transmit the data relating to the patient€™s condition to the nearest healthcare provider or doctor. The system also has a provision of providing a first aid treatment to facilitate early recovery of the patient and to prevent a health emergency from causing loss of life.

No. of Pages : 14 No. of Claims : 1

(12) PATENT APPLICATION PUBLICATION
(21) Application No.202141008608 A
(19) INDIA
(22) Date of filing of Application :01/03/2021
(43) Publication Date : 05/03/2021

(54) Title of the invention : SYSTEM AND METHOD OF DYNAMIC CURRENT LIMITING IN ELECTROMECHANICAL ACTUATION SYSTEM FOR AIRBORNE VEHICLE APPLICATIONS

(51) International classification	:H02P0006182000, H02P0006060000, H05K0007200000, H02P0007288000, F02D0041000000
(31) Priority Document No	:NA
(32) Priority Date	:NA
(33) Name of priority country	:NA
(86) International Application No	:NA
Filing Date	:NA
(87) International Publication No	: NA
(61) Patent of Addition to Application Number	:NA
Filing Date	:NA
(62) Divisional to Application Number	:NA
Filing Date	:NA

(71)**Name of Applicant :**
1)JALAN Hemant
Address of Applicant :Nucon Aerospace Pvt. Ltd Plot No.: 1/1 & 1/2, Nadergul Industrial Park, Nadergul, Saroor Nagar, Hyderabad - 501510 Telangana, INDIA Telangana India
(72)**Name of Inventor :**
1)JOSEPH IRUDAYA MANI, Loyo Prakash Thilak Jose
2)BUSANI Venu
3)ROKANDLA Madhusudhan
4)BOYINA Venkata Ramana

(57) Abstract :
A system for dynamic current limiting in electromechanical actuation system of airborne vehicles comprising of control surface fins (1), motor gear train (2), BLDC motor (3), and control power electronics wherein said control power electronics is comprising of H-bridge circuit (4), speed estimation module (5), back EMF estimation module (6), dynamic duty cycle estimation module (7) and PWM generator (8). Accordingly the motor speed is accurately measured using the incremental encoder(1a) and with the help of the measured speed, back EMF is estimated in the microcontroller of the control power electronics and compared with the look up table provided in the dynamic duty cycle estimation module (7) and desired PWM duty function is estimated by the PWM Generator and issued to MOSFET of the H Bridge circuit with the equivalent gate pulses, thereby limiting the over current to the safer limit so that the BLDC motor and control power electronics are safeguarded.

No. of Pages : 60 No. of Claims : 16

(12) PATENT APPLICATION PUBLICATION
(21) Application No.202141008618 A
(19) INDIA
(22) Date of filing of Application :01/03/2021
(43) Publication Date : 05/03/2021

(54) Title of the invention : PORTABLE CORONA VIRUS DETECTION DEVICE

(51) International classification	:C12Q0001700000, G06F0021560000, G01N0033497000, G01N0033543000, G01J0001460000	(71)**Name of Applicant :** **1)Dr.V.Radhika** Address of Applicant :D.No.3-17-47/22A, Lakshmi Nagar, Godarigunta Gunta, Kakinada East Godavari-533003, Andhra Pradesh, India. Andhra Pradesh India
(31) Priority Document No	:NA	(72)**Name of Inventor :**
(32) Priority Date	:NA	**1)Dr.V.Radhika**
(33) Name of priority country	:NA	
(86) International Application No	:NA	
Filing Date	:NA	
(87) International Publication No	: NA	
(61) Patent of Addition to Application Number	:NA	
Filing Date	:NA	
(62) Divisional to Application Number	:NA	
Filing Date	:NA	

(57) Abstract :
ABSTRACT: Title: Portable Corona Virus Detection Device The present disclosure proposes a portable corona virus detection device which comprises a breath collecting tube 101, multiple breath absorbing elements 103, an aura detector 104, an electromagnetic wave sensor 105, and a display unit 106. The proposed portable corona virus detection device collects breath of a user, takes photo of aura of the breath and detects corona virus by wavelength of its colour from the photo. The proposed portable corona virus detection device uses electromagnetic spectrum for quick, accurate and easy detection of corona virus.

No. of Pages : 15 No. of Claims : 8

(12) PATENT APPLICATION PUBLICATION
(21) Application No.202141008626 A
(19) INDIA
(22) Date of filing of Application :01/03/2021
(43) Publication Date : 05/03/2021

(54) Title of the invention : Design and Prototype of an IoT Enabled Accident Detection Module for Vehicular Communication Environment

(51) International classification	:G08G0001160000, G07C0005080000, G07C0005000000, H04L0029080000, H04W0004400000	(71)**Name of Applicant :** **1)S Sowjanya Chintalapati** Address of Applicant :Research Scholar, Dept of CSE, Koneru Lakshmaiah Education Foundation, Vaddeswaram, India Andhra Pradesh India
(31) Priority Document No	:NA	**2)B.Chaitanya Krishna**
(32) Priority Date	:NA	**3)B T P Madhav**
(33) Name of priority country	:NA	**4)S S Mohan Reddy**
(86) International Application No	:PCT//	**5)K Aruna Kumari**
Filing Date	:01/01/1900	(72)**Name of Inventor :**
(87) International Publication No	: NA	**1)S Sowjanya Chintalapati**
(61) Patent of Addition to Application Number	:NA	**2)B.Chaitanya Krishna**
Filing Date	:NA	**3)B T P Madhav**
(62) Divisional to Application Number	:NA	**4)S S Mohan Reddy**
Filing Date	:NA	**5)K Aruna Kumari**

(57) Abstract :
Due to the cumulative growth of vehicles in India without safety measures, accident occurrence rate has been increasing every year. Every year on a global scale, many deaths were recorded by unnecessary retardation in rescue activities. Now a days, Information Communication Technologies (ICT), has gained increasing attention and significance in contemporary transport networks. Vehicles embedded with a profusion of sensors enable us to not only monitor the current situation of the vehicle and its surroundings but also facilitates the detection of accidents. New devices embedded with advanced sensors will help the driver and the passengers a happy journey in safe environment. A novel IoT enabled architecture has been developed and it is utilizing smartphone connection to sensors for reduction of accident occurrence in the vehicular communication environment. Keywords: Accident Detection, IoT enabled Architecture, Vehicular Communication, Sensors.

No. of Pages : 10 No. of Claims : 4

(12) PATENT APPLICATION PUBLICATION
(21) Application No.202031007620 A
(19) INDIA
(22) Date of filing of Application :23/02/2020
(43) Publication Date : 05/03/2021

(54) Title of the invention : A NOVEL PAIN RELIEVING ELECTRONIC DEVICE USING THE GATE CONTROL THEORY

(51) International classification	:A61N0001360000, A61N0001040000, A61F0007000000, A61M0005420000, A61B0005000000	(71)**Name of Applicant :** **1)Silifarm Technologies Private Limited** Address of Applicant :LP. JH 1/9 Banipur Charu Chand Pal Rd, District- Howrah, Pincode- 711304, West Bengal, India
(31) Priority Document No	:NA	(72)**Name of Inventor :**
(32) Priority Date	:NA	**1)Rohan Roy**
(33) Name of priority country	:NA	**2)Roni Mondal**
(86) International Application No	:NA	**3)Arijit Ghosh**
Filing Date	:NA	
(87) International Publication No	: NA	
(61) Patent of Addition to Application Number	:NA	
Filing Date	:NA	
(62) Divisional to Application Number	:NA	
Filing Date	:NA	

(57) Abstract :
A novel pain relieving electronic device using the gate control theory Abstract The present invention proposed a menstrual pain reliever device is designed & fabricated based on the principle of gate control theory. It works upon Gate control Theory & blocks the pathway of pain to get relief from pain signals. It works as counter irritation process to distract brain from the pain by sending some square waves within a particular range of frequency through an electrode gel pad (1). The signal wave is applied on the area of pain at lower abdomen and at backside of girls and women who suffers from menstrual cramp. It provides an electric pulse of an amount of frequency which is adjustable, and can be controlled by the users through two tactile buttons. Two probes (2 & 4) are emerging out from the device, and electrode gel pads (1 & 3) are attached with it.

No. of Pages : 15 No. of Claims : 5

(12) PATENT APPLICATION PUBLICATION
(21) Application No.202031009213 A
(19) INDIA
(22) Date of filing of Application :04/03/2020
(43) Publication Date : 05/03/2021

(54) Title of the invention : ECOFRIENDLY BACTERIVORUS CILIATE BASED DEVICE FOR SUSTAINABLE MANAGEMENT OF WATER AND ITS CLEANIN AND SANITATION.

(51) International classification	:C02F0001000000, C10M0177000000, A61K0039120000, A61K0031635000, C07K0014440000	(71)**Name of Applicant :** **1)ZOOLOGICAL SURVEY OF INDIA** Address of Applicant :M-BLOCK, NEW ALIPORE, KOLKATA-700053.INDIA
(31) Priority Document No	:NA	(72)**Name of Inventor :**
(32) Priority Date	:NA	**1)SANTOSH KUMAR**
(33) Name of priority country	:NA	**2)DAIZY BHARTI**
(86) International Application No	:NA	**3)ANTONIETTA LA TERZA**
Filing Date	:NA	**4)DEVI SHANKAR SUMAN**
(87) International Publication No	: NA	**5)KAILASH CHANDRA**
(61) Patent of Addition to Application Number	:NA	
Filing Date	:NA	
(62) Divisional to Application Number	:NA	
Filing Date	:NA	

(57) Abstract :
Ciliate organisms are provided in a sealed bio-degradable bag in the form of dormant cysts that is activated from dormant to active forms when hydrated, i.e., bacteria contaminated aqueous medium. These bio-bags provide protection to ciliates from the predation by large organisms however allows the bacteria to enter inside that serves as food for ciliates. The bags/device can be made in different shapes and sizes, e.g., containers or frames, according to the targeted habitat area. Further, the eco-friendly bags/device for management of bacterial population could be utilised in wide variety of habitats especially with high concentration of bacteria. The methods for constructing these bio-bags/devices are also provided.

No. of Pages : 10 No. of Claims : 8

(12) PATENT APPLICATION PUBLICATION
(21) Application No.202031044832 A
(19) INDIA
(22) Date of filing of Application :14/10/2020
(43) Publication Date : 05/03/2021

(54) Title of the invention : DEVICE AND METHOD OF PROVIDING ENHANCED SURFACE AREA FOR GROWTH AND ATTACHMENT OF BIOFILMS / BIOLOGICAL CELLS IN A MODIFIED CYLINDRICAL FLASK

(51) International classification	:A61K0039390000, C12M0001120000, C12M0001240000, A61M0016080000, C02F0003040000	(71)**Name of Applicant :** **1)Ms.AtulonaDatta** Address of Applicant :Ms.AtulonaDatta School of Environmental Studies, Jadavpur University 188, Raja S.C. Mallick Rd, Kolkata- 700032, West Bengal **2)Dr. Joydeep Mukherjee**
(31) Priority Document No	:NA	
(32) Priority Date	:NA	
(33) Name of priority country	:NA	
(86) International Application No	:NA	
Filing Date	:NA	
(87) International Publication No	: NA	
(61) Patent of Addition to Application Number	:NA	
Filing Date	:NA	
(62) Divisional to Application Number	:NA	
Filing Date	:NA	

(72)**Name of Inventor :**
1)Dr. Joydeep Mukherjee
2)Ms.AtulonaDatta

(57) Abstract :
The invention is a modified cylindrical flask, suited for attachment, growth and culturing of biofilm and biofilm-forming organisms, or any other such matter which requires surface for adherence, in flasks, within an ex-situ environment. The preferred embodiment is configured with head, body, and accessory units. Head unit comprises of cap (3) where a flap (2) is attached to it using cap-to-flap connector (1) pivot. The body unit comprises of an internal chamber (4) with custom built slides (5, 6) inserted in the slots there within, and the internal chamber being enclosed in a jar (7). The head unit is so designed that any matter maybe put inside and taken out of the flask with relative ease. The slides (5, 6) are removable and can be put inside or taken out from the slots using the accessory unit comprising of spatula (8). The rectangular strip(s)of the invention provides increased surface area for growth, spread, proliferation and attachment of biofilm or surface-adhering samples; and the method of sampling ensures least distortion of sample characteristics when taken out. The invention makes the use, operability, maintainability and handling of such flasks which are conducive for presence of surface-adhering matter and/or biofilm growth easy, comfortable and hassle-free.

No. of Pages : 35 No. of Claims : 10

(12) PATENT APPLICATION PUBLICATION
(21) Application No.202131003189 A
(19) INDIA
(22) Date of filing of Application :22/01/2021
(43) Publication Date : 05/03/2021

(54) Title of the invention : DEVELOPMENT OF LIGHTWEIGHT FLY ASH ANGULAR AGGREGATES FOR STRUCTURAL APPLICATIONS

(51) International classification	:C04B0018080000, C04B0018020000, C04B0026160000, C04B0038000000, C10L0005360000	(71)**Name of Applicant :** **1)NATIONAL INSTITUTE OF TECHNOLOGY ROURKELA** Address of Applicant :National Institute of Technology, Rourkela, Rourkela-769008, Sundergarh, Odisha, India
(31) Priority Document No	:NA	(72)**Name of Inventor :**
(32) Priority Date	:NA	**1)Dr. Shishir Kumar Sahu**
(33) Name of priority country	:NA	**2)Mr. Pritam Kumar Pati**
(86) International Application No	:NA	
Filing Date	:NA	
(87) International Publication No	: NA	
(61) Patent of Addition to Application Number	:NA	
Filing Date	:NA	
(62) Divisional to Application Number	:NA	
Filing Date	:NA	

(57) Abstract :
The present invention relates to the development of the innovative lightweight fly ash angular aggregates (FAA) (300) using fly ash as the only main raw material. Fly ash is mixed with water along with a binding agent and compressed into briquettes. Briquettes are allowed for surface dry and then sintered in a muffle furnace for 10 hours. For the first 7 hours, the temperature is varied linearly to reach a temperature of 1250ºC in 7 hours. After that, the briquettes are sintered at a constant temperature of 1250ºC for the next 3 hours. Sintered briquettes (200) are crushed into angular aggregates (300) by aggregate crusher. The aggregates (300) produced are lightweight with specific gravity 1.83. Also, the fly ash aggregates (300) show better crushing value (27.00) and impact value (18.00) than granite aggregates and round-shaped fly ash pellets.

No. of Pages : 18 No. of Claims : 8

(12) PATENT APPLICATION PUBLICATION
(21) Application No.202131004594 A
(19) INDIA
(22) Date of filing of Application :03/02/2021
(43) Publication Date : 05/03/2021

(54) Title of the invention : DIESEL ENGINE FUELLED WITH BLENDS OF 5% LIQUID HYDRO CARBON WASTEPLASTICS FUELS,15% MAHUA BIODIESEL AND 80% DIESEL BY VOLUME

(51) International classification	:F02B0003060000, C10L0001020000, F02D0019060000, F02D0019100000, C10L0001180000
(31) Priority Document No	:NA
(32) Priority Date	:NA
(33) Name of priority country	:NA
(86) International Application No	:NA
Filing Date	:NA
(87) International Publication No	: NA
(61) Patent of Addition to Application Number	:NA
Filing Date	:NA
(62) Divisional to Application Number	:NA
Filing Date	:NA

(71)**Name of Applicant :**
1)DR.NABNIT PANIGRAHI
Address of Applicant :GANDHI INSTITUTE FOR TECHNOLOGY(GIFT), BHUBANESWAR,AT-GRAMADIHA,PO-GANGAPADA,DIST-KHORDA,ODISHA-752054
2)DR.SRUTI RANJAN MISHRA
3)DR.ALOK KUMAR MOHAPATRA
4)MR.BISWA BIHARI RATH
(72)**Name of Inventor :**
1)DR.NABNIT PANIGRAHI
2)DR.SRUTI RANJAN MISHRA
3)DR.ALOK KUMAR MOHAPATRA
4)MR.BISWA BIHARI RATH

(57) Abstract :
This research shows 3 fuels are blended with different proportions to run the diesel engine. This study extant, energy and exergy analysis of a diesel engine running on 5% liquid Hydro Carbon waste plastics fuels, 15% Mahua biodiesel and 80 % diesel. by volume without any modification to diesel engine. An effort has been made to investigate the enhancing performance of a diesel engine using energy and exergy analysis technique propelled with a blend fuel (5% liquid Hydro Carbon waste plastics fuels, 15 % Mahua biodiesel and 80 % diesel by volume). The experiments were conducted per mole of fuel basis on a 5.9 kW single cylinder; water cooled engine with 1500 rpm. The energy analysis indicates that about 35.09% and 36.15% of input energy is converted into output work for diesel and blend fuel respectively. The combustion efficiency of blend was higher than that of diesel by 1.78%. Exergetic efficiency of diesel and blend was found to be 32.75% and 32.61 %. The brake thermal efficiency of blend is 0.19% higher than diesel. Study indicates that blend fuel results coherence with the same energetic and exergetic performance as diesel fuel. Thus the diesel engine can be propelled with the blend fuel which can be used in rural areas in the field of agriculture and electrification.

No. of Pages : 18 No. of Claims : 6

(12) PATENT APPLICATION PUBLICATION
(19) INDIA
(22) Date of filing of Application :05/02/2021
(21) Application No.202131005029 A
(43) Publication Date : 05/03/2021

(54) Title of the invention : A LINEAR TIME INVARIANT (LTI) PHOTOVOLTAIC (PV) CONNECTED BOOST CONVERTER

(51) International classification	:H02J0003380000, G05F0001670000, H02M0003156000, G05F0001100000, H03G0001000000
(31) Priority Document No	:NA
(32) Priority Date	:NA
(33) Name of priority country	:NA
(86) International Application No	:NA
Filing Date	:NA
(87) International Publication No	: NA
(61) Patent of Addition to Application Number	:NA
Filing Date	:NA
(62) Divisional to Application Number	:NA
Filing Date	:NA

(71)**Name of Applicant :**
1)Maddikari Jagadeshwar
Address of Applicant :Department of Electrical and Electronics Engineering, National Institute of Technology, Nagaland, Chumukedima, Dimapur, Nagaland, Pin: 797103, India
2)Dushmanta Kumar Das
(72)**Name of Inventor :**
1)Maddikari Jagadeshwar
2)Dushmanta Kumar Das

(57) Abstract :
The present invention relates to a boost converter for the maximum power point tracking (MPPT) application of a solar photovoltaic (PV) system, more particularly, it discloses converters configured to control the current or voltage of the solar PV system and also both at a time can be used to design a control law to implement MPPT, a single input two output state space model of a boost converter is herein disclosed configured to be used to control both voltage and current of the PV system simultaneously.

No. of Pages : 27 No. of Claims : 9

(12) PATENT APPLICATION PUBLICATION
(21) Application No.202131005087 A
(19) INDIA
(22) Date of filing of Application :05/02/2021
(43) Publication Date : 05/03/2021

(54) Title of the invention : SYSTEM AND METHOD FOR AGGREGATING NEWSPAPERS ON A CENTRALIZED PLATFORM

(51) International classification	:G06Q0030020000, G07F0011040000, B01D0017020000, A47J0037070000, B42D0007000000	(71)**Name of Applicant :** **1)LTL FELA** Address of Applicant :MISSION VENG, AIZAWL, MIZORAM, INDIA **2)LALRAMHLUNI**
(31) Priority Document No	:NA	(72)**Name of Inventor :**
(32) Priority Date	:NA	**1)LTL FELA**
(33) Name of priority country	:NA	
(86) International Application No	:NA	
Filing Date	:NA	
(87) International Publication No	: NA	
(61) Patent of Addition to Application Number	:NA	
Filing Date	:NA	
(62) Divisional to Application Number	:NA	
Filing Date	:NA	

(57) Abstract :
A system for aggregating newspaper(s) on a centralized platform is provided. The system includes a newspaper aggregator which includes an aggregator module (30) which receives content of the newspaper(s) from agencies for aggregating the newspaper(s) and makes digital copies available on the centralized platform. The newspaper aggregator also includes a subscription module (60) which enables a user to select at least one of the agencies, approve a subscription plan selected from one of only print, print and digital, only digital, or a combination thereof upon receiving payment. The newspaper aggregator also includes an advertisement module (70) which incorporates advertisement content received from the user in the newspaper(s) of the agencies and enables the user to choose a type of the advertisement content to be displayed. The newspaper aggregator also includes an interaction module (80) which enables the user and the agencies to interact with each other, thereby aggregating the newspapers on the centralized platform.

No. of Pages : 29 No. of Claims : 10

(12) PATENT APPLICATION PUBLICATION
(21) Application No.202131005209 A
(19) INDIA
(22) Date of filing of Application :08/02/2021
(43) Publication Date : 05/03/2021

(54) Title of the invention : A PROCESS TO INCREASE EFFICIENCY AND ENERGY STRONG CAPACITY OF A FLY WHEEL.

(51) International classification	:C12G0003020000, H01L0051520000, G06Q0020200000, H01L0051000000, G06F0001320600	(71)**Name of Applicant :** **1)SAUMYA DEEP** Address of Applicant :407, MANDAKINI ENCLAVE, NEAR ADARSH NAGAR, SONARI, JAMSHEDPUR, JHARKHAND, PIN-831011
(31) Priority Document No	:NA	(72)**Name of Inventor :**
(32) Priority Date	:NA	**1)SAUMYA DEEP**
(33) Name of priority country	:NA	
(86) International Application No	:NA	
Filing Date	:NA	
(87) International Publication No	: NA	
(61) Patent of Addition to Application Number	:NA	
Filing Date	:NA	
(62) Divisional to Application Number	:NA	
Filing Date	:NA	

(57) Abstract :
This is a process to increase the energy output efficiency and energy storing capacity of a flywheel. The flywheel has hollow spaces inside it, in both horizontal and vertical planes of the flywheel. When the flywheel rotates , pistons filled with a liquid, move radially outwards under the influence of centrifugal force and in the process ,this radial outward motion of the liquid filled pistons (in the horizontal plane) stores energy in the energy storing mechanism inside the flywheel. This utilises the centrifugal force of the pistons to store additional energy in the flywheel system. Now when these liquid filled pistons have reached the optimum outermost limit in the hollow spaces in the horizontalplane of the flywheel, the liquid is released from these pistons and under the influence of centrifugal force, the liquid released move another set of pistons down in the hollow spaces in the vertical plane of the flywheel and in the process again stores energy by the motion of pistons in the vertical hollow spaces and using appropriate energy storing mechanism. This utilises centrifugal force acting on the liquid to store additional energy and the vertical plane of the flywheel is used at the optimum level. Now when the liquid , under the influence of centrifugal force, have moved pistons down in the vertical hollow space to the optimum limit and stored maximum energy by suitable energy storing mechanism, the liquid is ejected out from the rotating flywheel through outlets such that the liquid released by some velocity stores energy by utilising the motion of outgoing liquids under the influence of centrifugal force and a suitable energy storing mechanism in the outlets through which the liquid is ejected out during the rotation of flywheel. By ejecting the liquid out, additional energy is stored in the flywheel. The total energy output thus increases dramatically and now the energy is stored and can be derived from the flywheel in four parts. When the energy has to be derived from the flywheel, the flywheel releases it.by converting its rotational kinetic energy into electricity, just like conventional flywheel energy storage devices, and eventually stops after releasing its entire rotational kinetic energy. After extracting entire rotational kinetic energy of the whole flywheel, the energy stored by the liquid filled pistons in the hollow space in the horizontal plane is derived and the energy stored by the liquid in the hollow space in the vertical plane is derived, both of which is due to utilising the centrifugal force due to rotation of the flywheel. When the liquid is ejected out of the flywheel, this motion of the liquid is also used to store energy. Thus, by obeying this process, a flywheel can increase its output efficiency and energy storing capacity dramatically.

No. of Pages : 8 No. of Claims : 2

(12) PATENT APPLICATION PUBLICATION
(21) Application No.202131005895 A
(19) INDIA
(22) Date of filing of Application :11/02/2021
(43) Publication Date : 05/03/2021

(54) Title of the invention : A MULTILEVEL IMAGE SEGMENTATION HARDWARE

(51) International classification	:G06K0009380000, G06T0007110000, H04N0001400000, G06T0007136000, G06T0001000000
(31) Priority Document No	:NA
(32) Priority Date	:NA
(33) Name of priority country	:NA
(86) International Application No	:NA
Filing Date	:NA
(87) International Publication No	: NA
(61) Patent of Addition to Application Number	:NA
Filing Date	:NA
(62) Divisional to Application Number	:NA
Filing Date	:NA

(71)**Name of Applicant :**
1)Siddhartha Bhattacharyya
Address of Applicant :Dhakhineswari Apartment. Flat 301, 3rd Floor, B. T. Road, 8 (Hold), Panihati, Kolkata 700 114, West Bengal, India
2)Abhishek Basu
3)Sourav De
4)Jan Platoš
5)Vaclav Snasel
6)Leo Mršic
(72)**Name of Inventor :**
1)Siddhartha Bhattacharyya
2)Abhishek Basu
3)Sourav De
4)Jan Platoš
5)Vaclav Snasel
6)Leo Mršic

(57) Abstract :
The present invention presents hardware to implement multilevel thresholding of gray scale images. The basic principle of the invention is based on the fact that the intensity distribution in a gray scale image approximated by a multilevel sigmoidal function. A multilevel sigmoidal function is an extension of the standard sigmoidal function which comprises multiple lobes/levels to represent transitions from one gray level to another. Such function faithfully used to approximate the gray level transitions in a gray level image based on a chosen number of thresholds which in turn determine the different transition lobes/levels of the function. This function possesses the properties of continuity and differentiability. The invention has the variety of applications which include Video segmentation, Data Clustering, Multilevel thresholding of images, Big data analysis, Satellite image analysis etc.

No. of Pages : 30 No. of Claims : 4

(12) PATENT APPLICATION PUBLICATION
(19) INDIA
(22) Date of filing of Application :15/02/2021
(21) Application No.202131006222 A
(43) Publication Date : 05/03/2021

(54) Title of the invention : MACHINE LEARNING TECHNIQUES FOR EARLY DETECTION OF STROKE BASED SIGNALS

(51) International classification	:G06K0009620000, G06N0020000000, G06N0003040000, G06K0009460000, G06K0009000000
(31) Priority Document No	:NA
(32) Priority Date	:NA
(33) Name of priority country	:NA
(86) International Application No	:NA
Filing Date	:NA
(87) International Publication No	: NA
(61) Patent of Addition to Application Number	:NA
Filing Date	:NA
(62) Divisional to Application Number	:NA
Filing Date	:NA

(71)**Name of Applicant :**
1)Dr.JBV SUBRAHMANYAM
Address of Applicant :PROFESSOR & DEAN R&D , ELECTRICAL ENGINEERING DEPARTMENT, GIET UNIVERSITY CAMPUS, GUNUPUR, ODISHA,765022
2)Dr. M. RAMKUMAR PRABHU
3)Mr. KOPPULA PRAWAN
4)Dr. T. RAGHAVENDRA VISHNU
5)Dr.RAGHAVA YATHIRAJU
6)Dr.POKKUNURI PARDHA SARADHI
7)Dr. G RAMAKRISHNA
8)Dr. CHIRRA KESAVA REDDY
9)Mr.E.MURALI
10)Dr. A. RAJALINGAM
(72)**Name of Inventor :**
1)Dr.JBV SUBRAHMANYAM
2)Dr. M. RAMKUMAR PRABHU
3)Mr. KOPPULA PRAWAN
4)Dr. T. RAGHAVENDRA VISHNU
5)Dr.RAGHAVA YATHIRAJU
6)Dr.POKKUNURI PARDHA SARADHI
7)Dr. G RAMAKRISHNA
8)Dr. CHIRRA KESAVA REDDY
9)Mr.E.MURALI
10)Dr. A. RAJALINGAM

(57) Abstract :
Machine learning techniques for early detection of stroke-based signals is the proposed invention is that is implemented for the purpose of early detection using predictive analysis of the existing data of various patients and try to give a clue about the occurrence of the stroke. The invention addressed various parameters and attributes that cover both heart stroke as well as brain stroke. The proposed invention is implemented using machine learning techniques and clustering on data using the K-means algorithm. The resulted data is run using a predictive algorithm to give alerts regarding the occurrence of stroke based on the result of the predictive algorithm.

No. of Pages : 13 No. of Claims : 5

(12) PATENT APPLICATION PUBLICATION
(19) INDIA
(22) Date of filing of Application :17/02/2021
(21) Application No.202131006563 A
(43) Publication Date : 05/03/2021

(54) Title of the invention : HIGH YIELDING SHORT SYNTHETIC ROUTE FOR FAVIPIRAVIR

(51) International classification	:A61K0031496500, A61P0027020000, B01J0019000000, A61K0045060000, A61K0047640000	(71)**Name of Applicant :** **1)KALINGA INSTITUTE OF INDUSTRIAL TECHNOLOGY(KIIT)DEEMED TO BE UNIVERSITY** Address of Applicant :KIIT DU ROAD,BHUBANESWAR ODISHA-751024
(31) Priority Document No	:NA	(72)**Name of Inventor :** **1)PRATAP KUMAR DEHERI**
(32) Priority Date	:NA	
(33) Name of priority country	:NA	
(86) International Application No	:NA	
Filing Date	:NA	
(87) International Publication No	: NA	
(61) Patent of Addition to Application Number	:NA	
Filing Date	:NA	
(62) Divisional to Application Number	:NA	
Filing Date	:NA	

(57) Abstract :
Favipiravir is a known potent antiviral drug. The present invention relates to high yielding short synthetic route for favipiravir. The invention discloses a three steps synthetic method of favipiravir. The synthesis steps are; 1 Selective chlorination of Ethyl 3-hydroxypyrazine- 2- carboxylate using N-chloro succinamide 1. Fluorination using KF in dry acetonitrile 2. Treatment with NILOH to obtain favipiravir.

No. of Pages : 13 No. of Claims : 2

(12) PATENT APPLICATION PUBLICATION
(21) Application No.202131007234 A
(19) INDIA
(22) Date of filing of Application :21/02/2021
(43) Publication Date : 05/03/2021

(54) Title of the invention : SENSOR BASED INTELLIGENT DEVICE TO MONITOR PHYSICAL AND MENTAL HEALTH OF PATIENTS BASED ON THEIR BREATHING PATTERNS, ODOUR AND RESPIRATORY MEASUREMENTS

(51) International classification	:A61B0005000000, A61B0005087000, A61B0005080000, A61B0005020500, A61M0016000000
(31) Priority Document No	:NA
(32) Priority Date	:NA
(33) Name of priority country	:NA
(86) International Application No	:NA
Filing Date	:NA
(87) International Publication No	: NA
(61) Patent of Addition to Application Number	:NA
Filing Date	:NA
(62) Divisional to Application Number	:NA
Filing Date	:NA

(71)**Name of Applicant :**
1)Sanjaya Kumar Sarangi
Address of Applicant :Dept. Of Computer Science, Utkal University, Bhubaneswar, Khurda, Odisha, INDIA Pin- 751004
2)Dr. Mrutyunjaya Panda
3)Dr. S. Hemalatha
4)Dr.Subharda Mishra
5)Dr. Bhavik U swadia
6)Dr. Hardeep Singh Saini
7)Dr. Manas Ranjan Chowdhury
8)Dr Falak Oza Patel
9)Dr.K.Arumugam MCA.,MPhil.,PhD.
10)Dr. Moumi Pandit
11)Dr. Srividya R
12)Dr.S.Balamurugan
(72)**Name of Inventor :**
1)Sanjaya Kumar Sarangi
2)Dr. Mrutyunjaya Panda
3)Dr. S. Hemalatha
4)Dr.Subharda Mishra
5)Dr. Bhavik U swadia
6)Dr. Hardeep Singh Saini
7)Dr. Manas Ranjan Chowdhury
8)Dr Falak Oza Patel
9)Dr.K.Arumugam MCA.,MPhil.,PhD.
10)Dr. Moumi Pandit
11)Dr. Srividya R
12)Dr.S.Balamurugan

(57) Abstract :
The Sensor Based Intelligent Device to monitor Physical and Mental Health of Patients based on their Breathing Patterns, Odour and Respiratory Measurements (SIDPMH) helps the patients to make use of the SIDPMH in an automatic manner. Wearable headset is to wear by a patient. Adjustable sensor holder attached to the wearable headset consist of various sensor to measure the patient's breathing patterns, odour and respiratory measurements. Breath sensor senses the breathing patterns of the patient using breath air. If it is abnormal then immediately alert the user to make it normal. The odour sensor senses the odour air of the patient. The control unit matches the measurements with organic gas table. It suggests the patient with the possible type of stomach problem. Temperature sensor is to sense the breath air and body temperature of the patient. If it is abnormal then alert the patient to make it normal. The brain sensor senses the brain wave to assess the mental health of the patient. If it is abnormal then alert the patient to take relaxation by hearing of pleasant music and make them normal. The SIDPMH control unit monitors the successful functioning of the whole SIDPMH system. By using this SIDPMH, the patients can monitor their physical and mental health based on their breathing patterns, odour and respiratory measurements in an automatic manner.

No. of Pages : 16 No. of Claims : 3

(12) PATENT APPLICATION PUBLICATION
(21) Application No.202132006242 A
(19) INDIA
(22) Date of filing of Application :15/02/2021
(43) Publication Date : 05/03/2021

(54) Title of the invention : A TIME WARP AND FREE ENERGY MACHINE

(51) International classification	:G10L0019022000, G10L0021040000, G10L0019002000, G10L0025900000, G06F0003010000	(71)**Name of Applicant :** **1)GAUTAM NARAYAN BARUAH** Address of Applicant :C/O J.N. BARUAH, NEMATI ROAD, BORIGAON HOUSE NO 264, WARD NO 19 HOLDING MO 702, JORHAT-785001
(31) Priority Document No	:NA	(72)**Name of Inventor :**
(32) Priority Date	:NA	**1)GAUTAM NARAYAN BARUAH**
(33) Name of priority country	:NA	
(86) International Application No	:NA	
Filing Date	:NA	
(87) International Publication No	: NA	
(61) Patent of Addition to Application Number	:NA	
Filing Date	:NA	
(62) Divisional to Application Number	:	
Filed on	:01/01/1900	

(57) Abstract :
A time warp and free energy machine where a support is claimed where an object can rest with part of it's weight not supported even at the position of rest has (1) manual mechanical traction on Bl and B2 of modified incline plane to keep A1 and A2 at 45° automated by motorised screw and bolt as in figure 1 with car frame that slide on wheels to transmit forces between machine units on subsequent compartment above to integrate increased number of machine units in a decreased area of space (2) 4 or more set of machine units on 4 or more separate mounting frame held under conditions of active balance by motorised gear system with decreased height of supportive pillars so that passengers in the cabin move in a curved path but feel like moving in a straight line in relation to an external observer then claimed in patent specification 202031026658.

No. of Pages : 42 No. of Claims : 2

Publication After 18 Months:

The following Patent Applications have been published under Section 11A (3) of The Patents (Amendment) Act, 2005. Any Person may file representation by way of opposition to the Controller of Patents at the appropriate office against the grant of the patent in the prescribed manner under section 25(1) of the Patents (Amendment) Act, 2005 read with the rule 55 of The Patents (Amendment) Rules, 2006:

(12) PATENT APPLICATION PUBLICATION

(19) INDIA

(22) Date of filing of Application :17/09/2018

(21) Application No.201811034968 A

(43) Publication Date : 05/03/2021

(54) Title of the invention : ECO FRIENDLY OR MEDICINAL BALL PEN

(51) International classification	:H01M0010440000, G11B0017049000, G03G0015080000, A24D0003060000, B65D0006220000	(71)**Name of Applicant :** **1)VIVEK YADAV** Address of Applicant :G-246 GHAZIABAD U.P-201001, INDIA Uttar Pradesh India (72)**Name of Inventor :** **1)VIVEK YADAV**
(31) Priority Document No	:NA	
(32) Priority Date	:NA	
(33) Name of priority country	:NA	
(86) International Application No	:NA	
Filing Date	:NA	
(87) International Publication No	: NA	
(61) Patent of Addition to Application Number	:NA	
Filing Date	:NA	
(62) Divisional to Application Number	:NA	
Filing Date	:NA	

(57) Abstract :
This ball point and gel point pen spreads poisonous air in the environment and plastic pens are used in daily life, which human And diseases are increasing to animals and animals will work to get rid of them to some extent. Our country will also work to make the world green will do. Along with this, giving medicinal plants will work.

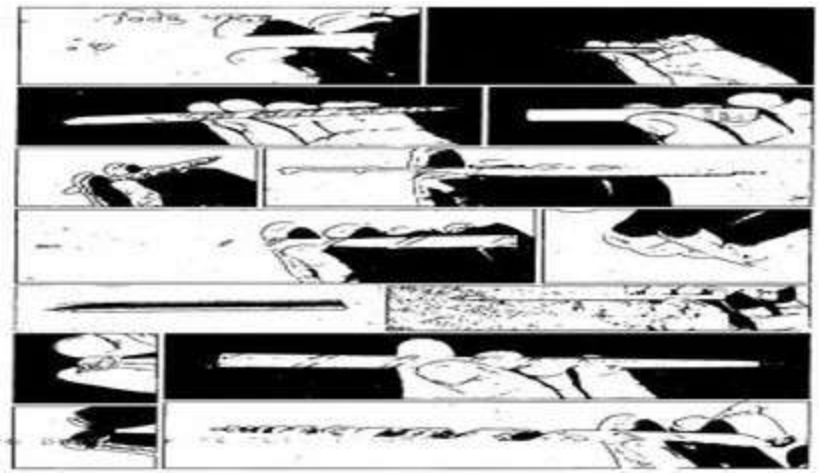

No. of Pages : 7 No. of Claims : 1

(12) PATENT APPLICATION PUBLICATION
(19) INDIA
(22) Date of filing of Application :26/08/2019

(21) Application No.201911034237 A
(43) Publication Date : 05/03/2021

(54) Title of the invention : PROLONGED RELEASE COMPOSITION OF INDAPAMIDE

(51) International classification	:A61K0009200000, A61K0031404000, A61K0009000000, A61K0009127000, A61K0009160000
(31) Priority Document No	:NA
(32) Priority Date	:NA
(33) Name of priority country	:NA
(86) International Application No	:NA
Filing Date	:NA
(87) International Publication No	: NA
(61) Patent of Addition to Application Number	:NA
Filing Date	:NA
(62) Divisional to Application Number	:NA
Filing Date	:NA

(71)**Name of Applicant :**
1)SHIVALIK RASAYAN LIMITED
Address of Applicant :1506, Chiranjiv Tower, 43, Nehru Place, New Delhi-110019 Delhi India
(72)**Name of Inventor :**
1)MANISH SRIVASTAVA
2)AKSHAY KANT CHATURVEDI

(57) Abstract :
The invention provides a prolonged release pharmaceutical composition of Indapamide comprising 0.1-2%) w/w of Indapamide, 10-25%) w/w of one or more cellulose derivatives polymers with the viscosity of 20-80 cP measured using 0.5% w/w of aqueous solution. The prolonged release pharmaceutical composition of Indapamide provides the drug release upto 24 hour, useful in the treatment of hypertension.

No. of Pages : 25 No. of Claims : 7

(12) PATENT APPLICATION PUBLICATION
(19) INDIA
(22) Date of filing of Application :26/08/2019
(21) Application No.201911034246 A
(43) Publication Date : 05/03/2021

(54) Title of the invention : METHOD AND SYSTEM FOR AUTHENTICATION VIA ATRUSTED EXECUTION ENVIRONMENT

(51) International classification	:H04L0029060000, G06Q0020400000, G06Q0020380000, G06F0021620000, G06F0021310000	(71)**Name of Applicant :** **1)MASTERCARD INTERNATIONAL INCORPORATED** Address of Applicant :2000 PURCHASE STREET, PURCHASE, NY 10577, UNITED STATES OF AMERICA U.S.A.
(31) Priority Document No	:NA	(72)**Name of Inventor :**
(32) Priority Date	:NA	**1)RUTHERFORD, Bruce, John**
(33) Name of priority country	:NA	**2)SHARMA, Prashant**
(86) International Application No	:NA	**3)CUTTLER, David**
Filing Date	:NA	**4)MUSHING, Alan**
(87) International Publication No	: NA	
(61) Patent of Addition to Application Number	:NA	
Filing Date	:NA	
(62) Divisional to Application Number	:NA	
Filing Date	:NA	

(57) Abstract :
A method for authentication facilitated via a trusted execution environment includes: reading payment credentials in a first application program stored in a first memory area of a computing device; transmitting an authentication request to a second application program stored in a trusted execution environment of the computing device separate from the first memory area; displaying a prompt for authentication data based on an instruction supplied by the second application program; receiving authentication data; transmitting the received authentication data to an external computing device; receiving, by the second application program of the computing device, an authentication result from the external computing device; and transmitting, by the second application program of the computing device, the authentication result to the first application program in response to the authentication request.

No. of Pages : 39 No. of Claims : 16

(12) PATENT APPLICATION PUBLICATION
(19) INDIA
(22) Date of filing of Application :26/08/2019

(21) Application No.201911034251 A
(43) Publication Date : 05/03/2021

(54) Title of the invention : A CATALYTIC MODULE AND A PROCESS FOR FABRICATION THEREOF

(51) International classification	:C01B0003400000, B01J0035000000, B01J0037030000, B01J0023000000, B01D0039160000
(31) Priority Document No	:NA
(32) Priority Date	:NA
(33) Name of priority country	:NA
(86) International Application No	:NA
Filing Date	:NA
(87) International Publication No	: NA
(61) Patent of Addition to Application Number	:NA
Filing Date	:NA
(62) Divisional to Application Number	:NA
Filing Date	:NA

(71)**Name of Applicant :**
1)COUNCIL OF SCIENTIFIC AND INDUSTRIAL RESEARCH
Address of Applicant :ANUSANDHAN BHAWAN, 2 RAFI MARG NEW DELHI-110001, INDIA Delhi India
(72)**Name of Inventor :**
1)R. NANDINI DEVI
2)SHUNOTTARA MILIND JOGDAND
3)ULHAS KANHAIYALAL KHARUL
4)PRACHITI RAVINDRA BEDADUR
5)PARESH LAXIKANT DHEPE
6)DHEERENDRA SINGH
7)AKSHAY RAMNATH KASAR

(57) Abstract :
The present invenlion relates to a catalytic module or composition comprising Ceramic hollow fibers, active metal or metal oxide catalysts and a process for fabrication thereof.

No. of Pages : 30 No. of Claims : 10

(12) PATENT APPLICATION PUBLICATION
(21) Application No.201911034252 A
(19) INDIA
(22) Date of filing of Application :26/08/2019
(43) Publication Date : 05/03/2021

(54) Title of the invention : A MACHINE AND METHOD AND MACHINE FOR CONTINUOUS GRATING AND SEPERATION OF SEEDS FORM FRUITS.

(51) International classification	:A23L0033105000, A23N0004000000, A23N0012020000, B65B0025040000, A23L0003160000	(71)**Name of Applicant :** **1)COUNCIL OF SCIENTIFIC AND INDUSTRIAL RESEARCH** Address of Applicant :ANUSANDHAN BHAWAN, 2 RAFI MARG NEW DELHI-110001, INDIA Delhi India
(31) Priority Document No	:NA	(72)**Name of Inventor :**
(32) Priority Date	:NA	**1)K. VENKATESH MURTHY**
(33) Name of priority country	:NA	**2)R. CHETANA**
(86) International Application No	:NA	**3)NITIN SONKAR**
Filing Date	:NA	**4)G. SURESH KUMAR**
(87) International Publication No	: NA	
(61) Patent of Addition to Application Number	:NA	
Filing Date	:NA	
(62) Divisional to Application Number	:NA	
Filing Date	:NA	

(57) Abstract :
The present invention relates to a Machine and Method for continuous grating and separation of seeds from spherical fruits. Based on stationery circular multi pointed cutter and a rotating vanes/conical rotor concept, the device of the present invention is proposed for grating of fruits, vegetables, coconut Amla and other similar products, untouched by hand. According to this invention, it can grate different varieties and sizes of Amla and other similar products having different geometry and hardness. The method of thee present invention for continuous grating and separation of seeds from fruits is provided comprising the steps of (a) Cutting the fruit through circular mufti pointed cutter, (b) thrashing the fruit onto the wall of the sieve with a centrifugal force; (c) grating the fruit revolving under a tangential force; (d) scooping the pulp out of the cutting edges of the grating sieve in a manner such that the tangential force and the Centrifugal force are balanced so as to firmly hold the moving fruit against the wall of the stationary sieve [Fig. 3] as the diameter of the fruit reduces to thai of the seed.

No. of Pages : 16 No. of Claims : 10

(12) PATENT APPLICATION PUBLICATION
(21) Application No.201911034265 A
(19) INDIA
(22) Date of filing of Application :26/08/2019
(43) Publication Date : 05/03/2021

(54) Title of the invention : LINAGLIPTIN NANOSUSPENSION FOR NEURODEGENRATIVE DISORDER

(51) International classification	:A61K0009000000, A61K0009140000, A61K0009100000, A61K0031522000, A61K0031551000	(71)**Name of Applicant :** **1)BHAVNA** Address of Applicant :School of Pharmaceutical and Population Health Informatics, DIT University, Dehradun-248009, India. India
(31) Priority Document No	:NA	(72)**Name of Inventor :**
(32) Priority Date	:NA	**1)BHAVNA**
(33) Name of priority country	:NA	**2)DEEPIKA SHARMA**
(86) International Application No	:NA	
Filing Date	:NA	
(87) International Publication No	: NA	
(61) Patent of Addition to Application Number	:NA	
Filing Date	:NA	
(62) Divisional to Application Number	:NA	
Filing Date	:NA	

(57) Abstract :
ABSTRACT LINAGLIPTIN NANOSUSPENSION FOR NEURODEGENERATIVE DISORDERS The present invention relates to a pharmaceutical formulation comprising of a nanosuspension of Linagliptin for nose to brain delivery for targeting and treating neurodegenerative disorders like dementia. In a particular, the present invention provides a pharmaceutical formulation of a nanosuspension of a drug, comprising of: the drug in nanoparticulate form; a polymer; and a surfactant.

No. of Pages : 37 No. of Claims : 11

(12) PATENT APPLICATION PUBLICATION
(21) Application No.201911034267 A
(19) INDIA
(22) Date of filing of Application :26/08/2019
(43) Publication Date : 05/03/2021

(54) Title of the invention : ANALYSIS OF PASSING SEQUENCE USING PIGEON-HOLE PROBLEM AND FACTORIZATION OF PRIMARY AND SECONDARY EXTRINSIC VARIABLES THEREBY INFLUENCING DYNAMIC GAME PLAY

(51) International classification	:A63B0069400000, A63F0013828000, A63B0063000000, A63B0069000000, A63F0007060000
(31) Priority Document No	:NA
(32) Priority Date	:NA
(33) Name of priority country	:NA
(86) International Application No	:NA
Filing Date	:NA
(87) International Publication No	: NA
(61) Patent of Addition to Application Number	:NA
Filing Date	:NA
(62) Divisional to Application Number	:NA
Filing Date	:NA

(71)**Name of Applicant :**
1)KUNAL ABHAY SHAH
Address of Applicant :ITM UNIVERSE, C/O CARE MEDICAS, ADARSH MARKET, DASOK, UDAIPUR, RAJASTHAN-313022, INDIA Rajasthan India
2)SHIVAM SHAH
(72)**Name of Inventor :**
1)KUNAL ABHAY SHAH
2)SHIVAM SHAH

(57) Abstract :
We propose segmentation of the football field such that the final one-third of the pitch be acknowledged as the proverbial build-up zone in our novel model. The utility of this demarcation is highlighted in our approach for predicting passing sequences for football game simulation. We propose a bi-focal approach for optimal passing sequence generation for enhanced expected goals(xG) probability. Our model employs a model approach to factor in primary and secondary extrinsic variables and their influence on the dynamic game-play. We define primary variables as different phases of the game namely; player compatibility in the attacking team, player compatibility in the opposition team, throw-ins, corner kicks, free kicks, goal kicks, long balls, crosses, through balls and unorthodox passes. We define secondary variables as a product of all the primary variables that influence the gameplay. These variables are namely; Stamina(Tiredness of a player), Time elapsed(remaining time of normal gameplay), Injuries, Introduction of Substitutes(including Debutants), Individual Ball progression quantification.

No. of Pages : 7 No. of Claims : 2

(12) PATENT APPLICATION PUBLICATION
(21) Application No.201911034300 A
(19) INDIA
(22) Date of filing of Application :26/08/2019
(43) Publication Date : 05/03/2021

(54) Title of the invention : A NOVEL COMPOUND FOR TREATING ALZHEIMER'S DISEASE AND A METHOD OF PREPARATION THEREOF

(51) International classification	:A61K0051040000, C01F0007160000, C07F0005000000, C07D0405140000, A61P0035000000	(71)**Name of Applicant :** **1)INDIAN INSTITUTE OF TECHNOLOGY (BANARAS HINDU UNIVERSITY), VARANASI** Address of Applicant :Varanasi-221005, Uttar Pradesh, India Uttar Pradesh India
(31) Priority Document No	:NA	(72)**Name of Inventor :**
(32) Priority Date	:NA	**1)AVANISH TRIPATHI**
(33) Name of priority country	:NA	**2)PIYOOSH SHARMA**
(86) International Application No	:NA	**3)PRIYANKA KUMARI CHOUBEY**
Filing Date	:NA	**4)SUSHANT KUMAR SHRIVASTAVA**
(87) International Publication No	: NA	
(61) Patent of Addition to Application Number	:NA	
Filing Date	:NA	
(62) Divisional to Application Number	:NA	
Filing Date	:NA	

(57) Abstract :
The present invention provides a novel compound for treating Alzheimers disease and a method of preparation thereof. More particularly, the present invention provides a novel compound 2-(2,4-difluorophenyl)-5-(4-(pyridin-2-yl) piperazin-l-yl)-l,3,4-oxadiazole which has multi-functional potential against Alzheimers disease and provides a method of preparation thereof.

No. of Pages : 30 No. of Claims : 10

(12) PATENT APPLICATION PUBLICATION
(21) Application No.201911034359 A
(19) INDIA
(22) Date of filing of Application :26/08/2019
(43) Publication Date : 05/03/2021

(54) Title of the invention : ENCRYPTING & DECRYPTING DATA ON AN EXTERNAL DEVICE COMMUNICATIVELY COUPLED WITH A HOST DEVICE

(51) International classification	:H04L0009080000, G06Q0020360000, H04L0009060000, G06F0011100000, H04N0007160000	(71)**Name of Applicant :** **1)National Institute of Technology, Kurukshetra** Address of Applicant :National Institute of Technology Kurukshetra, Kurukshetra-136119, Haryana, India Haryana India (72)**Name of Inventor :** **1)CHHABRA, Jitender Kumar** **2)GAURAV** **3)CHAUHAN, Nischay**
(31) Priority Document No	:NA	
(32) Priority Date	:NA	
(33) Name of priority country	:NA	
(86) International Application No	:NA	
Filing Date	:NA	
(87) International Publication No	: NA	
(61) Patent of Addition to Application Number	:NA	
Filing Date	:NA	
(62) Divisional to Application Number	:NA	
Filing Date	:NA	

(57) Abstract :
The present invention provides a device and method of encoding of data in an external device using undetectable and random keys, stored in non-visible portion of the external device. For every encryption, a new set of 420 bytes are randomly generated and stored in the nonvisible portion of the boot sector of the external device and the duplicate copy of the boot sector of the external device. During encryption, 53 keys of 8 bytes each are generated from these 420 bytes and thereafter, each of these keys of 8 bytes are converted into 1 special key, to form 53 special keys. These special keys are used to encrypt every single byte of file in an external device. Therefore, 53 bytes of data of the file is encrypted at once and then the cycle is repeated. After encryption, the original bytes are replaced with encrypted bytes at physical sectors and clusters of the external device.

No. of Pages : 34 No. of Claims : 15

(12) PATENT APPLICATION PUBLICATION
(21) Application No.201911034365 A
(19) INDIA
(22) Date of filing of Application :26/08/2019
(43) Publication Date : 05/03/2021

(54) Title of the invention : PORTABLE HANDHELD BIOGAS MONITORING DEVICE

(51) International classification	:H04W0068020000, H04W0074080000, G08B0027000000, A61B0090000000, G03F0009000000
(31) Priority Document No	:NA
(32) Priority Date	:NA
(33) Name of priority country	:NA
(86) International Application No	:NA
Filing Date	:NA
(87) International Publication No	: NA
(61) Patent of Addition to Application Number	:NA
Filing Date	:NA
(62) Divisional to Application Number	:NA
Filing Date	:NA

(71)**Name of Applicant :**
1)Chairman, Defence Research & Development Organisation
Address of Applicant :Ministry of Defence, Govt. of India, Room No. 348, B-Wing, DRDO Bhawan Rajaji Marg New Delhi New Delhi India 110011 Delhi India
(72)**Name of Inventor :**
1)DEV VRAT KAMBOJ
2)RAM SINGH CHAUHAN
3)PRINCE KUMAR
4)LOKENDRA SINGH

(57) Abstract :
A gas measuring device/ apparatus to measure the volume of biogas generated from biodigester slurry is provided by way of a portable device without utilizing any electronic or electrical inputs.

No. of Pages : 22 No. of Claims : 11

(12) PATENT APPLICATION PUBLICATION
(21) Application No.201911034374 A
(19) INDIA
(22) Date of filing of Application :26/08/2019
(43) Publication Date : 05/03/2021

(54) Title of the invention : USER -CUSTOMIZED ELECTRONICALLY VENDABLE GIFT MANAGEMENT SYSTEM & A METHOD THEREOF

(51) International classification	:G07B0017000000, H04W0092180000, G06Q0050320000, H04N0001387000, A61M0005480000	(71)**Name of Applicant :** **1)MOOLCHANDANI, Raghav** Address of Applicant :1024B, DLF MAGNOLIAS, GURUGRAM-122009, INDIA Haryana India (72)**Name of Inventor :** **1)MOOLCHANDANI, Raghav**
(31) Priority Document No	:NA	
(32) Priority Date	:NA	
(33) Name of priority country	:NA	
(86) International Application No	:NA	
Filing Date	:NA	
(87) International Publication No	: NA	
(61) Patent of Addition to Application Number	:NA	
Filing Date	:NA	
(62) Divisional to Application Number	:NA	
Filing Date	:NA	

(57) Abstract :
An electronically vendable gift management system and method enabling user to customize and print an electronically vendable gift via a kiosk, with customizable content and/or design. The user may also choose the gift of a predefined denomination from a list of participating brands basis the occasion or interest of the recipient. The system further allows the user an option to customize a packaging alongwith printing option for the same. The system may allow the user to calculate postage and choose a delivery option. The system may further be accessed by personal device or mobile phone or a website after verification and allows the user to print and dispense the electronically vendable gift.

No. of Pages : 19 No. of Claims : 10

(12) PATENT APPLICATION PUBLICATION
(19) INDIA
(22) Date of filing of Application :27/08/2019
(21) Application No.201911034434 A
(43) Publication Date : 05/03/2021

(54) Title of the invention : AN ULTRASONIC SCISSOR

(51) International classification	:A61B0017280000, B26B0013220000, B06B0001060000, A61B0017320100, E05D0015520000
(31) Priority Document No	:NA
(32) Priority Date	:NA
(33) Name of priority country	:NA
(86) International Application No	:NA
Filing Date	:NA
(87) International Publication No	: NA
(61) Patent of Addition to Application Number	:NA
Filing Date	:NA
(62) Divisional to Application Number	:NA
Filing Date	:NA

(71)**Name of Applicant :**
1)AMITY UNIVERSITY
Address of Applicant :AMITY UNIVERSITY CAMPUS, SECTOR-125 NOIDA UTTAR PRADESH-201313, INDIA Uttar Pradesh India
(72)**Name of Inventor :**
1)ASHOK KUMAR RAGHAV
2)SUJIT KUMAR

(57) Abstract :
The present invention relates to an ultrasonic scissor for improved, effortless and effective cutting. The scissor has a small extension added to its operating handle. With these scissors any person can cut simple,.complex designs or anything very easily and smoothly.

No. of Pages : 11 No. of Claims : 1

(12) PATENT APPLICATION PUBLICATION
(19) INDIA
(22) Date of filing of Application :27/08/2019
(21) Application No.201911034435 A
(43) Publication Date : 05/03/2021

(54) Title of the invention : AN AUTOMOBILE BATTERY POWER LEVEL INDICATOR

(51) International classification	:H02J0007000000, H02J0009060000, G01R0031360000, D07B0001140000, H02J0001080000
(31) Priority Document No	:NA
(32) Priority Date	:NA
(33) Name of priority country	:NA
(86) International Application No	:NA
Filing Date	:NA
(87) International Publication No	: NA
(61) Patent of Addition to Application Number	:NA
Filing Date	:NA
(62) Divisional to Application Number	:NA
Filing Date	:NA

(71)**Name of Applicant :**
1)AMITY UNIVERSITY
Address of Applicant :AMITY UNIVERSITY CAMPUS, SECTOR-125 NOIDA UTTAR PRADESH-201313, INDIA Uttar Pradesh India
(72)**Name of Inventor :**
1)ASHOK KUMAR RAGHAV
2)NEERAJ GUPTA
3)RASHMI GUPTA
4)SUJIT KUMAR

(57) Abstract :
The present invention relates to a battery power level indicator particularly to be used in automobile gives indication of battery Due to non-uses of battery for long period, battery may reach into deep discharge condition which can be recovered by charging the battery for relatively longer time. When no signal comes on, it is total failure of the battery and or wire. The present indicator provides the indication so that user is aware well in advance.

No. of Pages : 12 No. of Claims : 2

(12) PATENT APPLICATION PUBLICATION
(21) Application No.201911034457 A
(19) INDIA
(22) Date of filing of Application :27/08/2019
(43) Publication Date : 05/03/2021

(54) Title of the invention : SEALING OF TUBES BY EXPLOSIVE WELDING

(51) International classification	:B23K0020080000, F16C0023040000, E02F0009280000, A61B0001018000, E21D0020020000
(31) Priority Document No	:NA
(32) Priority Date	:NA
(33) Name of priority country	:NA
(86) International Application No	:NA
Filing Date	:NA
(87) International Publication No	: NA
(61) Patent of Addition to Application Number	:NA
Filing Date	:NA
(62) Divisional to Application Number	:NA
Filing Date	:NA

(71)**Name of Applicant :**
1)Chairman, Defence Research And Development Organisation (DRDO)
Address of Applicant :Ministry Of Defence, Govt. of India, Room No. 348, B- Wing, DRDO Bhawan, Rajaji Marg, New Delhi-110011, India Delhi India
(72)**Name of Inventor :**
1)KAUR, Jatinder
2)KUMAR, Dinesh
3)SINGH, Jaspreet
4)PANDEY, Anand Kumar
5)SRIVASTAVA, Niraj
6)KISHORE, Prateek
7)SINGH, Manjit

(57) Abstract :
A plugging component (200) adapted to be inserted into a bore (104) of a tube for sealing by explosive welding is disclosed. The plugging component (200) includes front portion (202) having a diameter less than a diameter of the bore (104), a central portion (204) having a diameter less than the diameter of the front portion (202), a rear portion (206) having a diameter larger than the diameter of the bore (104), and a central cavity (212) extending along the length of the plugging component (200) to accommodate an explosive charge (214) for being detonated to weld the plugging component (200) with the tube for sealing the tube. The plugging component (200) is inserted into the bore (104) from the front portion (202). A constant distance is maintained between the central portion (204) of the plugging component (200) and an inner wall (208) of the tube, and the rear portion (206) is adapted to extend outside the bore (104).

No. of Pages : 18 No. of Claims : 10

(12) PATENT APPLICATION PUBLICATION
(21) Application No.201911034458 A
(19) INDIA
(22) Date of filing of Application :27/08/2019
(43) Publication Date : 05/03/2021

(54) Title of the invention : A POWER CONVERTER IN A GRID-INTEGRATED POWER GENERATOR AND A METHOD THEREIN

(51) International classification	:H02M0001000000, H02J0003380000, H02J0003320000, H02J0003000000, G01R0031400000	(71)**Name of Applicant :** **1)Indian Institute of Technology Delhi** Address of Applicant :Indian Institute of Technology Delhi, Hauz Khas, New Delhi- 110016, India Delhi India (72)**Name of Inventor :** **1)SINGH, Bhim** **2)PANIGRAHI, Bijaya Ketan** **3)KUMAR, Nishant**
(31) Priority Document No	:NA	
(32) Priority Date	:NA	
(33) Name of priority country	:NA	
(86) International Application No	:NA	
Filing Date	:NA	
(87) International Publication No	: NA	
(61) Patent of Addition to Application Number	:NA	
Filing Date	:NA	
(62) Divisional to Application Number	:NA	
Filing Date	:NA	

(57) Abstract :
The present invention relates to a power converter in a grid-integrated power generator, the converter comprising: a DC supply obtained from power source, a DC-DC boost-converter connected between the DC supply and a DC-Link capacitor, a voltage source-converter (VSC) connected across the DC-link capacitor for converting a DC boosted voltage into an AC-voltage, a load provided at the point of common-coupling (PCC) defined by a connection of the load, a grid and output terminals of the VCS, a first current sensing arrangement provided between load and the PCC for sensing three-phase load-currents, a second current sensing arrangement provided between grid and PCC for sensing grid-current and a first-control unit for controlling the operation of voltage source converter based on the sensed 3 phase load current and the grid current, without using the PCC voltage.

No. of Pages : 41 No. of Claims : 10

(12) PATENT APPLICATION PUBLICATION
(19) INDIA
(22) Date of filing of Application :27/08/2019
(21) Application No.201911034475 A
(43) Publication Date : 05/03/2021

(54) Title of the invention : AN ANTIFUNGAL FORMULATION PREPARED FROM PHYTOCOMPOUNDS OF RHEUM EMODI AS BIO ENHANCER FOR ANTIBIOTICS.

(51) International classification	:C07K0014400000, C12R0001725000, A61K0036530000, A61K0031122000, C07C0050340000
(31) Priority Document No	:NA
(32) Priority Date	:NA
(33) Name of priority country	:NA
(86) International Application No	:NA
Filing Date	:NA
(87) International Publication No	: NA
(61) Patent of Addition to Application Number	:NA
Filing Date	:NA
(62) Divisional to Application Number	:NA
Filing Date	:NA

(71)**Name of Applicant :**
1)SHOOLINI UNIVERSITY OF BIOTECHNOLOGY AND MANAGEMENT SCIENCES
Address of Applicant :VILLAGE- BHAJOL, P.O. SULTANPUR, SOLAN-(HP) Himachal Pradesh India
(72)**Name of Inventor :**
1)Mr. RAJAN ROLTA
2)Dr VIKAS KUMAR
3)PROF. ANURADHA SOURIRAJAN
4)PROF. KAMAL DEV

(57) Abstract :
Present invention relates to methanolic extract of rhizome of R. emodi was subjected to sequential fractionations using n- hexane, chloroform, ethyl acetate and aqueous subfractions. The different solvent fractions were tested for antifungal assay against S. cerevisiae (HI086), Candida albicans (ATCC90028 and MTCC277) using agar well diffusion method and broth dilution method to determine minimal inhibitory (MIC) concentration. The MIC values were decreased in chloroform sub fractions I, II, 111(1.5- 6.25 ug/ml) as compared chloroform fractions (15.625 - 62.5 ug/ml).Sub fraction II which was identified as emodin showed MIC value of 125-250 ug/ml. The FIC data clearly showed synergistic activity of Chloroform fraction (by decreasing the MIC of antibiotics from 32-65 folds) with fluconazole against, Candida albicans ATCC90028(0.031), Candida albicans MTCC277 (0.031) and Amphotericin B against Candida albicans ATCC90028(0.0624), Candida albicans MTCC277 (0.0932). Further, chloroform sub-fraction was separated using thin layer chromatography (TLC) to identify the phytocompounds and showed the appearance of three unique spot with Rf value of 0.45, 0.54, and 0.957 and named as chloroform sub-fractions I, II, III respectively. Using HP-TLC, fraction II was identified as emodin with Rf =0.4. The sub-fractions I, II, III showed MIC values of 6.25, 6.25 ug/mlrespectively against. The MIC valuesfor fractions I, II, III were 3.13,1.56,3.13 ug/mlrespectively against Candida albicans MTCC277, whereas for subfractions I, II, III, the MIC values were 3.13,3.13,3.13 ug/mlrespectively against Candida albicans ATCC90028.MIC of emodin was 125,250 ug/ml agamstCandida albicans MTCC277 and ATCC 90028respectively.Sub fractions I, II, III and purified emodin showed synergistic potential against fungal strains (Candida albicans MTCC277, and ATCC 90028) with decrease in MIC of antibiotics from 2-64 folds in combination with fluconazole and amphotericin B. Emodin obeys Linpinskis rule and drug likeness was predicted.

No. of Pages : 23 No. of Claims : 9

(12) PATENT APPLICATION PUBLICATION
(21) Application No.201911034493 A
(19) INDIA
(22) Date of filing of Application :27/08/2019
(43) Publication Date : 05/03/2021

(54) Title of the invention : A PRESS MACHINE

(51) International classification	:H01R0043010000, A01C0011000000, G06F0003000000, B25B0011020000, F16M0011220000	(71)**Name of Applicant :** **1)MAHINDRA AND MAHINDRA LIMITED** Address of Applicant :Farm Equipment Sector, Swaraj Division, Phase IV, Industrial Area, S.A.S. Nagar (Mohali)-160055, Punjab, India Punjab India
(31) Priority Document No	:NA	(72)**Name of Inventor :**
(32) Priority Date	:NA	**1)SINGH, Baljinder**
(33) Name of priority country	:NA	**2)ATWAL, Sony**
(86) International Application No	:NA	
Filing Date	:NA	
(87) International Publication No	: NA	
(61) Patent of Addition to Application Number	:NA	
Filing Date	:NA	
(62) Divisional to Application Number	:NA	
Filing Date	:NA	

(57) Abstract :
The present disclosure relates to the field of axle sub-assembly. The envisaged press machine (100) comprises a base fixture (103) onto which the sub-assembly (104) is mounted, a vertically displaceable ram (106), mounting means, an arm (110) and a sensor (112). The mounting means is configured to attach a press tool (108) to the ram (106) for pressing the studs (102) within the slots (104A) in vertical axis up to the predefined depth. The arm (110) is fitted to the ram (106). The sensor (112) is located adjacent to the base fixture (103). The arm (110) touches the sensor (112) only if the stud (102) is fitted in the vertical axis within the slot (104A) up to the predefined depth and closes the circuit to facilitate upward displacement of the ram, thus indicating that the stud (102) has been properly press fitted in the slot (104A).

No. of Pages : 19 No. of Claims : 10

(12) PATENT APPLICATION PUBLICATION
(21) Application No.201911034494 A
(19) INDIA
(22) Date of filing of Application :27/08/2019
(43) Publication Date : 05/03/2021

(54) Title of the invention : A STEERING OIL FILLING SYSTEM AND A METHOD THEREOF

(51) International classification	:B67D0007040000, B67D0007420000, E21B0047024000, B67D0007320000, A61B0001045000	(71)**Name of Applicant :** **1)MAHINDRA AND MAHINDRA LIMITED** Address of Applicant :Farm Equipment Sector, Swaraj Division, Phase IV, Industrial Area, S.A.S. Nagar (Mohali)-160055, Punjab, India Punjab India
(31) Priority Document No	:NA	(72)**Name of Inventor :**
(32) Priority Date	:NA	**1)SINGH, Baljinder**
(33) Name of priority country	:NA	**2)ATWAL, Sony**
(86) International Application No	:NA	
Filing Date	:NA	
(87) International Publication No	: NA	
(61) Patent of Addition to Application Number	:NA	
Filing Date	:NA	
(62) Divisional to Application Number	:NA	
Filing Date	:NA	

(57) Abstract :
The present disclosure relates to the field of systems and methods for filling steering oil in steering sub-assemblies. The envisaged system (100) and method eliminates human error and ensures filling of adequate steering oil in a steering sub-assembly (106). The system (100) comprises a filling gun (104), a control unit (102), and a stopping mechanism (109). The filling gun (104) is configured to dispense oil in the steering sub-assembly (106). The control unit (102) is coupled to the filling gun to detect the quantity of oil being dispensed. Further, the control unit (102) is configured to generate a control signal upon dispensation of a predetermined quantity of oil. The stopping mechanism (109) is configured to cooperate with the control unit (102), and is further configured to provide passage for transferring the steering sub-assembly (106) from a platform (108a) to a conveyor (108b), upon receiving the control signal.

No. of Pages : 29 No. of Claims : 11

(12) PATENT APPLICATION PUBLICATION
(19) INDIA
(22) Date of filing of Application :27/08/2019

(21) Application No.201911034517 A
(43) Publication Date : 05/03/2021

(54) Title of the invention : METHODS, SYSTEMS AND COMPUTER PROGRAM PRODUCTS FOR PREPAYMENT TOWARDS GOODS OR SERVICES AT POINT-OF-SALE TERMINALS

(51) International classification	:G06Q0020200000, G06Q0020340000, G06Q0020040000, G06F0009300000, G06Q0020100000
(31) Priority Document No	:NA
(32) Priority Date	:NA
(33) Name of priority country	:NA
(86) International Application No	:NA
Filing Date	:NA
(87) International Publication No	: NA
(61) Patent of Addition to Application Number	:NA
Filing Date	:NA
(62) Divisional to Application Number	:NA
Filing Date	:NA

(71)**Name of Applicant :**
1)MASTERCARD INTERNATIONAL INCORPORATED
Address of Applicant :2000 PURCHASE STREET, PURCHASE, NY 10577, UNITED STATES OF AMERICA U.S.A.

(72)**Name of Inventor :**
1)KODURI, Aditya
2)AGGARWAL, Anurag
3)SENGAR, Shubhangi
4)PATEL, Rakesh, Kumar

(57) Abstract :
The invention provides systems, methods and computer program products for implementing a prepaid currency transaction. The invention comprises (i) receiving a payment instruction for incrementing or debiting a prepaid currency value stored in a first payment account, (ii) implementing the payment instruction, (hi) identifying a set of POS terminals for implementing a memory update memory within each POS terminal in the identified set of POS terminals, wherein the memory update comprises recording an incremented or decremented prepaid currency value stored in the first payment account as a result of implementing the payment instruction, and (iv) performing the memory update within each POS terminal in the identified set of POS terminals.

No. of Pages : 51 No. of Claims : 9

(12) PATENT APPLICATION PUBLICATION
(21) Application No.201911034530 A
(19) INDIA
(22) Date of filing of Application :27/08/2019
(43) Publication Date : 05/03/2021

(54) Title of the invention : WIND-HYDRO RENEWABLE MICROGRID

(51) International classification	:H02J0003380000, H02J0003000000, H02J0003320000, H02J0003060000, H02J0007350000	(71)**Name of Applicant :** **1)INDIAN INSTITUTE OF TECHNOLOGY DELHI** Address of Applicant :Hauz Khas New Delhi India 110016 Delhi India
(31) Priority Document No	:NA	(72)**Name of Inventor :**
(32) Priority Date	:NA	**1)SINGH, Bhim**
(33) Name of priority country	:NA	**2)PATHAK, Geeta**
(86) International Application No	:NA	**3)PANIGRAHI, Bijaya Ketan**
Filing Date	:NA	
(87) International Publication No	: NA	
(61) Patent of Addition to Application Number	:NA	
Filing Date	:NA	
(62) Divisional to Application Number	:NA	
Filing Date	:NA	

(57) Abstract :
The present invention discloses a wind-hydro based renewable microgrid to serve the community loads. This microgrid entails two renewable resources: wind and hydro to feed power to the local loads and a battery storage system is also the part of microgrid to support the system during peak load demands or in low renewable generations. All the renewable sources and storage devices are connected through a single voltage source converter (VSC), which reduces the use of bidirectional converters in the microgrid for different sources. The microgrid control for VSC provides power quality solutions under normal operating conditions. Various expected operating conditions such as 1) wind speed variation, 2) load unbalance and 3) increase in load demand are considered to check the microgrid performance under dynamic conditions. A microgrid topology with aforesaid operations is not being reported in past.

No. of Pages : 24 No. of Claims : 10

(12) PATENT APPLICATION PUBLICATION
(21) Application No.201911034554 A
(19) INDIA
(22) Date of filing of Application :27/08/2019
(43) Publication Date : 05/03/2021

(54) Title of the invention : AN ILLUMINATED DESTINATION SIGN FOR SCHOOL BUSES

(51) International classification	:B32B0007120000, G09F0013220000, G04G0017080000, G09G0003140000, F21V0033000000	(71)**Name of Applicant :** **1)Daimler AG** Address of Applicant :70546 Stuttgart, Germany. Germany (72)**Name of Inventor :** **1)Mr. Gary Moody** **2)Mr. Thomas Budry**
(31) Priority Document No	:NA	
(32) Priority Date	:NA	
(33) Name of priority country	:NA	
(86) International Application No	:NA	
Filing Date	:NA	
(87) International Publication No	: NA	
(61) Patent of Addition to Application Number	:NA	
Filing Date	:NA	
(62) Divisional to Application Number	:NA	
Filing Date	:NA	

(57) Abstract :
A multi-layered, thin and flexible illuminated display 100 for buses displaying destination and other information is disclosed, having: an operational layer 102 sandwiched between one or more front layers 104, and one or more back layers 106. Operational layer 102 includes fibre-optic channels 400 defining a desired display information, and LED strips 402 located on sides of the fibre-optic channels 400 along their length. Fibre-optic channels 400 are open on the front side 122 of the operational layer 102 for emitting light when the LED strips 402 are illuminated. An induction power system to wirelessly transfer electric power from inside of the bus to the display is provided, having display side portion located within the operational layer 102. A magnetic or adhesive layer 120 is provided as outer most position on the back side 124 for fixing the display as a decal on an outer surface of the bus.

No. of Pages : 19 No. of Claims : 10

(12) PATENT APPLICATION PUBLICATION
(21) Application No.201911034570 A
(19) INDIA
(22) Date of filing of Application :28/08/2019
(43) Publication Date : 05/03/2021

(54) Title of the invention : A MUCO-ADHESIVE POLYMERIC MICELLAR STRUCTURE AND PROCESS FOR PREPARING THE SAME

(51) International classification	:A61K0009000000, A61K0009107000, A61K0009480000, A61K0009510000, A61K0009160000
(31) Priority Document No	:NA
(32) Priority Date	:NA
(33) Name of priority country	:NA
(86) International Application No	:NA
Filing Date	:NA
(87) International Publication No	: NA
(61) Patent of Addition to Application Number	:NA
Filing Date	:NA
(62) Divisional to Application Number	:NA
Filing Date	:NA

(71)**Name of Applicant :**
1)BIRLA INSTITUTE OF TECHNOLOGY & SCIENCE (BITS), PILANI
Address of Applicant :Birla Institute of Technology & Science (BITS), Pilani, Pilani Campus, Vidya Vihar, Pilani, Jhunjunu District, Rajasthan 333031, India. Rajasthan India
(72)**Name of Inventor :**
1)Biswas Swati
2)Ghosh Balaram
3)Himanshu Bhatt
4)Sanhita Roy

(57) Abstract :
The invention relates to a pharmaceutical composition comprising a muco-adhesive polymeric micellar structure in the nanometer size range having a core encapsulating a model quinolone drug. The shell comprises of glycol chitosan and the core is of poly (lactic acid) of the amphiphilic polymer. The invention also relates to a process for preparing the muco-adhesive polymeric micellar structure and its ocular application.

No. of Pages : 19 No. of Claims : 10

(12) PATENT APPLICATION PUBLICATION
(21) Application No.201911034571 A
(19) INDIA
(22) Date of filing of Application :28/08/2019
(43) Publication Date : 05/03/2021

(54) Title of the invention : COMPOUNDS FOR THE TREATMENT OF INFLAMMATION AND PROCESSES FOR PREPARING THE SAME

(51) International classification	:C07D0213300000, C07D0213740000, C07D0257040000, C07D0409140000, C07D0213890000
(31) Priority Document No	:NA
(32) Priority Date	:NA
(33) Name of priority country	:NA
(86) International Application No	:NA
Filing Date	:NA
(87) International Publication No	: NA
(61) Patent of Addition to Application Number	:NA
Filing Date	:NA
(62) Divisional to Application Number	:NA
Filing Date	:NA

(71)**Name of Applicant :**
1)BIRLA INSTITUTE OF TECHNOLOGY & SCIENCE (BITS), PILANI
Address of Applicant :Birla Institute of Technology & Science (BITS), Pilani, Pilani Campus, Vidya Vihar, Pilani, Jhunjunu District, Rajasthan 333031, India. Rajasthan India
(72)**Name of Inventor :**
1)Perumal Yogeeswari
2)Asireddy Parameshwar Reddy
3)Dwivedi Shubham

(57) Abstract :
This invention relates to compounds for the treatment of inflammation, particularly inflammation involved in neurological disorders. Compounds may have general Formula I or general Formula II: O Formula I where R= mono substituted or unsubstituted phenyl, pyridine CI, pyridine Br, pyridine Me or pyridine OMe O Boc Formula II whereRl=mono substituted phenyl derivatives The invention also relates to processes for preparing the said compounds.

No. of Pages : 44 No. of Claims : 9

(12) PATENT APPLICATION PUBLICATION
(19) INDIA
(22) Date of filing of Application :28/08/2019

(21) Application No.201911034572 A
(43) Publication Date : 05/03/2021

(54) Title of the invention : A LIQUID VOLUME REGULATING APPARATUS COMPRISING A NOVEL VALVE ASSEMBLY.

(51) International classification	:B67D0007020000, F16K0031240000, F17C0013020000, F16K0027060000, F16K0005060000
(31) Priority Document No	:NA
(32) Priority Date	:NA
(33) Name of priority country	:NA
(86) International Application No	:NA
Filing Date	:NA
(87) International Publication No	: NA
(61) Patent of Addition to Application Number	:NA
Filing Date	:NA
(62) Divisional to Application Number	:NA
Filing Date	:NA

(71)**Name of Applicant :**
1)BIRLA INSTITUTE OF TECHNOLOGY & SCIENCE (BITS), PILANI
Address of Applicant :Birla Institute of Technology & Science (BITS), Pilani, Pilani Campus, Vidya Vihar, Pilani, Jhunjunu District, Rajasthan 333031, India. Rajasthan India
(72)**Name of Inventor :**
1)Vinayak, Hemant Kumar
2)R, Anand Kumar
3)Abdul Salam, Bahurudeen
4)Varghese, Jittin

(57) Abstract :
This invention relates to a liquid volume regulating apparatus for use in a liquid storage tank, said apparatus comprising a novel valve assembly having a valve, torsional spring and a lever arm attached to a float device. The invention particularly relates to a novel Im¬port ball valve assembly disposed in a liquid flow path for use in the liquid volume regulating apparatus. The assembly finds application in water storage tanks, in toilet flush tanks etc.

No. of Pages : 23 No. of Claims : 8

(12) PATENT APPLICATION PUBLICATION
(19) INDIA
(22) Date of filing of Application :28/08/2019

(21) Application No.201911034573 A
(43) Publication Date : 05/03/2021

(54) Title of the invention : A PORTABLE HANDHELD ELECTROCHEMICAL DISCHARGE MACHINING DEVICE.

(51) International classification	:H05K0003000000, B23H0009020000, C04B0030020000, G06K0019073000, B24B0055020000
(31) Priority Document No	:NA
(32) Priority Date	:NA
(33) Name of priority country	:NA
(86) International Application No	:NA
Filing Date	:NA
(87) International Publication No	: NA
(61) Patent of Addition to Application Number	:NA
Filing Date	:NA
(62) Divisional to Application Number	:NA
Filing Date	:NA

(71)**Name of Applicant :**
1)BIRLA INSTITUTE OF TECHNOLOGY & SCIENCE (BITS), PILANI
Address of Applicant :Birla Institute of Technology & Science (BITS), Pilani, Pilani Campus, Vidya Vihar, Pilani, Jhunjunu District, Rajasthan 333031, India. Rajasthan India
(72)**Name of Inventor :**
1)Mukund Laxman Harugade
2)Waigaonkar Sachin Damodharrao
3)Nikhil Shrikant Mane

(57) Abstract :
The invention relates to a portable handheld electrochemical discharge machining device. The device finds use in finishing or deburring of existing drilled holes, particularly for non -metallic materials, and precise removal of delaminated fibres from drilled holes in a typical fibrous composite product.

No. of Pages : 18 No. of Claims : 10

(12) PATENT APPLICATION PUBLICATION
(21) Application No.201911034581 A
(19) INDIA
(22) Date of filing of Application :28/08/2019
(43) Publication Date : 05/03/2021

(54) Title of the invention : POWER GENERATING DEVICE

(51) International classification	:A61B0005050000, B60T0013720000, B60T0008320000, F03B0013000000, E05B0047060000	(71)**Name of Applicant :** **1)Chandigarh Group of Colleges** Address of Applicant :Landran Kharar Banur Highway, Sector 112, Sahibzada Ajit Singh Nagar, Mohali, Punjab-140307, India. Punjab India
(31) Priority Document No	:NA	(72)**Name of Inventor :**
(32) Priority Date	:NA	**1)Gaurav Kumar**
(33) Name of priority country	:NA	**2)Surinder Singh**
(86) International Application No	:NA	**3)Shivam Chaturvedi**
Filing Date	:NA	**4)Mehak Sharma**
(87) International Publication No	: NA	
(61) Patent of Addition to Application Number	:NA	
Filing Date	:NA	
(62) Divisional to Application Number	:NA	
Filing Date	:NA	

(57) Abstract :
The present invention relates to a power generating device comprising vacuum chambers, wherein an inner chamber is enclosed in an outer chamber, a solenoid for generating electromagnetic waves, magnets to help the solenoid in generating electromagnetic waves, a motor for providing rotational movement to the solenoid, a transducer for converting the electromagnetic waves to electricity, a vacuum tube to pass the electromagnetic waves, a motion sensor for detecting motion of the solenoid, wherein the motion sensor generates a signal upon detecting no motion in the solenoid, a microcontroller for receiving the signal and generating a command signal in response to the received signal to turn on the motor.

No. of Pages : 11 No. of Claims : 7

(12) PATENT APPLICATION PUBLICATION
(21) Application No.201911034582 A
(19) INDIA
(22) Date of filing of Application :28/08/2019
(43) Publication Date : 05/03/2021

(54) Title of the invention : FRAUD DETECTION METHOD

(51) International classification	:G06Q0020400000, G06Q0020020000, G06Q0040020000, G06Q0020200000, G06Q0030060000
(31) Priority Document No	:NA
(32) Priority Date	:NA
(33) Name of priority country	:NA
(86) International Application No	:NA
Filing Date	:NA
(87) International Publication No	: NA
(61) Patent of Addition to Application Number	:NA
Filing Date	:NA
(62) Divisional to Application Number	:NA
Filing Date	:NA

(71)**Name of Applicant :**
1)Chandigarh Group of Colleges
Address of Applicant :Landran Kharar Banur Highway, Sector 112, Sahibzada Ajit Singh Nagar, Mohali, Punjab-140307, India. Punjab India
(72)**Name of Inventor :**
1)Suraj Monga
2)Dr. Amit Verma
3)Iqbaldeep Kaur
4)Manpreet Singh Bajwa
5)Akash Singla
6)Dhruv Bhasin
7)Akshat Arora

(57) Abstract :
The fraud detection method, comprising the steps of initiating a transaction after entering a user name and password details of a user, storing a current transactions data on a database, acquiring an information of users profile from the database for fetching details of the former transactions, analyzing the current and previous transaction for generating an output, classifying the user into genuine and fraud category on the basis of the generated output, accepting the current transaction on the detection of genuine user and rejecting the transaction on the basis of fraud detection, deducting the user defined amount from users bank account after accepting the transaction and sending an alert to an authorized person about the rejection of the transaction.

No. of Pages : 10 No. of Claims : 5

(12) PATENT APPLICATION PUBLICATION
(21) Application No.201911034583 A
(19) INDIA
(22) Date of filing of Application :28/08/2019
(43) Publication Date : 05/03/2021

(54) Title of the invention : HEALTHCARE SYSTEM AND A METHOD THEREOF

(51) International classification	:G06Q0050220000, A61B0005145000, G16H0050200000, G16H0040200000, G16H0010600000
(31) Priority Document No	:NA
(32) Priority Date	:NA
(33) Name of priority country	:NA
(86) International Application No	:NA
Filing Date	:NA
(87) International Publication No	: NA
(61) Patent of Addition to Application Number	:NA
Filing Date	:NA
(62) Divisional to Application Number	:NA
Filing Date	:NA

(71)**Name of Applicant :**
1)Chandigarh Group of Colleges
Address of Applicant :Landran Kharar Banur Highway, Sector 112, Sahibzada Ajit Singh Nagar, Mohali, Punjab-140307, India. Punjab India
(72)**Name of Inventor :**
1)Iqbaldeep Kaur
2)Manpreet Singh Bajwa
3)Dr. Amit Verma

(57) Abstract :
The present invention relates to a healthcare system and method, wherein the system comprises of a collection module connected to the system to gather user data and to record the medical history of patients, an analyzation module connected to the collection module for analysis of recorded data, a prediction module connected to the analyzation module for the prediction of diseases, a recommendation modules linked to the prediction module for recommending appropriate treatment to the patient, and an interaction module for patients digital interaction with the doctor. The method for healthcare system comprising steps of collecting data in the collection module and recording the medical history of patients, analysis of recorded data properly with the analyzation module, predicting patients disease by applying prediction module, recommending proper treatment to the patient by recommendation module, and interacting with the physician by the patient with the help of interaction module.

No. of Pages : 12 No. of Claims : 7

(12) PATENT APPLICATION PUBLICATION
(19) INDIA
(22) Date of filing of Application :28/08/2019

(21) Application No.201911034584 A
(43) Publication Date : 05/03/2021

(54) Title of the invention : ROAD SIDE ASSISTANCE SYSTEM AND A METHOD THEREOF

(51) International classification	:H04N0001000000, G06F0021310000, H04W0076500000, H04N0021431000, G06F0021410000
(31) Priority Document No	:NA
(32) Priority Date	:NA
(33) Name of priority country	:NA
(86) International Application No	:NA
Filing Date	:NA
(87) International Publication No	: NA
(61) Patent of Addition to Application Number	:NA
Filing Date	:NA
(62) Divisional to Application Number	:NA
Filing Date	:NA

(71)**Name of Applicant :**
1)Chandigarh Group of Colleges
Address of Applicant :Landran Kharar Banur Highway, Sector 112, Sahibzada Ajit Singh Nagar, Mohali, Punjab-140307, India. Punjab India

(72)**Name of Inventor :**
1)Ayush Goyal
2)Dr. Tanvi
3)Manvinder
4)Dr. Amit Verma
5)Iqbaldeep Kaur
6)Jagjit
7)Mandeep
8)Harsh Kushwaha

(57) Abstract :
The present invention relates to a roadside assistance system and method, wherein the system comprises of a registration module installed in system for registration, a login module attached to registration module for login, a utility module connected to login module for providing plurality of service choices and plurality of service centers list, a database associated with system for storing set of information(s) and a user platform for accessing services. The method for roadside assistance system, comprises the steps of registering user(s) on the registration module for finding nearest mechanic, signing in using the login module for accessing the list, storing user(s) information in said datastorage module, providing plurality of service choices by employing the utility module and providing list of registered, un-registered and local service providers in service centers, storing service centers information in data storage and displaying stored information on user platform.

No. of Pages : 12 No. of Claims : 7

(12) PATENT APPLICATION PUBLICATION
(21) Application No.201911034620 A
(19) INDIA
(22) Date of filing of Application :28/08/2019
(43) Publication Date : 05/03/2021

(54) Title of the invention : METHOD AND DEVICE TO MEASURE YOUNG'S MODULUS OF EAR LOBULE

(51) International classification	:A44C0007000000, A61Q0019080000, G01L0001040000, A61B0005000000, A61F0002120000
(31) Priority Document No	:NA
(32) Priority Date	:NA
(33) Name of priority country	:NA
(86) International Application No	:NA
Filing Date	:NA
(87) International Publication No	: NA
(61) Patent of Addition to Application Number	:NA
Filing Date	:NA
(62) Divisional to Application Number	:NA
Filing Date	:NA

(71)**Name of Applicant :**
1)DR. MADHUBARI VATHULYA
Address of Applicant :ALL INDIA INSTITUTE OF MEDICAL SCIENCES, DEPARTMENT OF BURNS & PLASTIC SURGERY, VIRBHADRA MARG, PASHULOK, RISHIKESH-249203, UTTARAKHAND, INDIA Uttarakhand India
(72)**Name of Inventor :**
1)DR. MADHUBARI VATHULYA

(57) Abstract :
The present invention rel¬¬¬¬ates to a compact, simple and inexpensive system, apparatus and method to measure youngs modulus and other biomechanical parameters of ear lobule, making it ideal for research and clinical measurements. The invention has an application in cosmetology and Reconstructive Plastic Surgery. Ear lobe is a delicate and complex organ, which is subject to external stress and therefore is prone to various deformations. Deformity due to ageing, ptosis, congenital defects, surgeries and accidents are the common conditions. Additionally, split ear lobule and/or enlarged earholes are common conditions due to wearing of heavy ear-rings for a long time. The device and method can be used to predict the maximum load with the Youngs modulus calculated using further finite element analysis. Invention is easy to use and simple as it minimizes the computations for youngs modulus measurement. The device is highly compact and economical, as compared to colossal and costly devices available. It notably measures the youngs modulus of ear lobule, which is critical for its protection and is helpful in biological integrity and pressure management due to movement, stretching, ageing, application of force and other factors.

No. of Pages : 17 No. of Claims : 8

(12) PATENT APPLICATION PUBLICATION
(21) Application No.201911034631 A
(19) INDIA
(22) Date of filing of Application :28/08/2019
(43) Publication Date : 05/03/2021

(54) Title of the invention : COPPER AND SILVER IMMOBILIZED NANO-SIZED MONTMORILLONITE CLAY WITH ANTIMICROBIAL PROPERTIES

(51) International classification	:C08K0003340000, A01N0059160000, D01F0001100000, A01N0059200000, A01N0025100000
(31) Priority Document No	:NA
(32) Priority Date	:NA
(33) Name of priority country	:NA
(86) International Application No	:NA
Filing Date	:NA
(87) International Publication No	: NA
(61) Patent of Addition to Application Number	:NA
Filing Date	:NA
(62) Divisional to Application Number	:NA
Filing Date	:NA

(71)**Name of Applicant :**
1)Indian Institute of Technology Delhi
Address of Applicant :Hauz Khas, New Delhi - 110016 Delhi India
(72)**Name of Inventor :**
1)Mangala Joshi
2)Anasuya Roy
3)Rahul Sahu

(57) Abstract :
The present invention relates to the synthesis of a copper- montmorillonite and silver-montmorillonite clay complex for antimicrobial applications. The method includes antimicrobial metal elements silver and copper immobilized into MMT clay to prepare a novel antimicrobial nanoclay powder of low cost and high potency. NPs deposited over inorganic supports such as montmorillonite (MMT) nanoclay provides advantages in terms of stability, reactivity and controlled release characteristics The antimicrobial silver-clay and copper-clay powders are prepared through sequential steps of dry milling, sonication, acid activation, exchange reaction, centrifugation, drying and grinding. The copper- montmorillonite and silver-montmorillonite clay complex can be used as additives for polymers, plastics, textiles, paints, chemicals etc to provide anti-microbial properties for long duration.

No. of Pages : 19 No. of Claims : 12

(12) PATENT APPLICATION PUBLICATION
(19) INDIA
(22) Date of filing of Application :28/08/2019
(21) Application No.201911034658 A
(43) Publication Date : 05/03/2021

(54) Title of the invention : A METHOD FOR FRYING SUGAR RICH FRUITS AND PROCESS THEREOF

(51) International classification	:A23P0020100000, A23L0019180000, F26B0005040000, A23L0029300000, A23B0007020000
(31) Priority Document No	:NA
(32) Priority Date	:NA
(33) Name of priority country	:NA
(86) International Application No	:NA
Filing Date	:NA
(87) International Publication No	: NA
(61) Patent of Addition to Application Number	:NA
Filing Date	:NA
(62) Divisional to Application Number	:NA
Filing Date	:NA

(71)**Name of Applicant :**
1)Chairman, Defence Research & Development Organisation
Address of Applicant :Ministry of Defence, Govt. of India, Room No - 348, B-Wing, DRDO Bhawan, Rajaji Marg, New Delhi - 110011, India Delhi India
(72)**Name of Inventor :**
1)Chauhan, Om Prakash
2)Narasimhamurthy, Ravi
3)Pandey, Arun Kumar
4)Nagaraj, Roopa
5)Patki, Prakash Eknath

(57) Abstract :
The present invention provides a process for frying of sugar rich fruits such as jackfruit, apple, papaya, pears, banana, mango, strawberry, and the like under vacuum conditions at temperature less than 100 °C. Pretreatments such as freezing, partial dehydration and use of hydrocolloids before vacuum frying of fruits results in good quality products having typical color of the fruit making the product highly acceptable. The chips have less oil absorption and have a good shelf life of 6 months under ambient temperature conditions when packed in suitable polymeric film with inert gas.

No. of Pages : 10 No. of Claims : 9

(12) PATENT APPLICATION PUBLICATION
(21) Application No.201911034683 A
(19) INDIA
(22) Date of filing of Application :28/08/2019
(43) Publication Date : 05/03/2021

(54) Title of the invention : METHOD FOR GROUPING OF OPTICAL FIBERS

(51) International classification	:G02B0006440000, G01R0031260000, C03C0017340000, F21S0041365000, G01M0011080000	(71)**Name of Applicant :** **1)Sterlite Technologies Limited** Address of Applicant :House No. IFFCO Tower, 3rd Floor, Plot No.3, Street Sector 29 City Gurgaon State Haryana Country India Pin code 122002 Haryana India
(31) Priority Document No	:NA	(72)**Name of Inventor :**
(32) Priority Date	:NA	**1)Hemanth Kondapalli**
(33) Name of priority country	:NA	
(86) International Application No	:NA	
Filing Date	:NA	
(87) International Publication No	: NA	
(61) Patent of Addition to Application Number	:NA	
Filing Date	:NA	
(62) Divisional to Application Number	:NA	
Filing Date	:NA	

(57) Abstract :
ABSTRACT METHOD FOR GROUPING OF OPTICAL FIBRES The present disclosure provides a method for grouping of a plurality of optical fibres. The method includes coating of each of the plurality of optical fibres with a first coating layer (106) and a magnetic coating layer (108). Further, the method includes applying magnetic field over the plurality of optical fibres for grouping of the plurality of optical fibres in a predefined manner. Furthermore, the first coating layer (106) serves as a shock absorber to protect the plurality of optical fibres from physical damage. FIG. 1

No. of Pages : 18 No. of Claims : 16

(12) PATENT APPLICATION PUBLICATION
(21) Application No.201911034689 A
(19) INDIA
(22) Date of filing of Application :28/08/2019
(43) Publication Date : 05/03/2021

(54) Title of the invention : BILL BANK

(51) International classification	:G06F0016583000, G06F0009455000, G06T0003400000, G06F0016903000, G06F0021410000	(71)**Name of Applicant :** **1)Harmanpreet Singh** Address of Applicant :Near SBI Bank, VPO - Shahpur, Haryana India **2)Gurpinder Singh**
(31) Priority Document No	:NA	(72)**Name of Inventor :**
(32) Priority Date	:NA	**1)Harmanpreet Singh**
(33) Name of priority country	:NA	**2)Gurpinder Singh**
(86) International Application No	:NA	
Filing Date	:NA	
(87) International Publication No	: NA	
(61) Patent of Addition to Application Number	:NA	
Filing Date	:NA	
(62) Divisional to Application Number	:NA	
Filing Date	:NA	

(57) Abstract :
A system and apparatus for managing, viewing, and sorting plurality of electronic bills of the user using at least one consolidated bill id wherein the electronic bills are related to different biller entity. The system comprising: an input module, a processing module, an output module, and a database. The input module is configured for receiving at least one consolidated bill id wherein the least one consolidated bill id is a single/unique bill id associated with at least one or more user account number. The database is configured for storing at least plurality of bill ids and their associated at least one or more bills. Further, the processing module is configured for comparing the at least consolidated bill id with the at least plurality of bill ids from a database, retrieving at least one or more bills corresponding to the at least one consolidated bill id from the database. The output module of the system is configured for displaying the at least one or more retrieved bills associated with the at least one consolidated bill id.

No. of Pages : 10 No. of Claims : 15

(12) PATENT APPLICATION PUBLICATION
(21) Application No.201911034710 A
(19) INDIA
(22) Date of filing of Application :28/08/2019
(43) Publication Date : 05/03/2021

(54) Title of the invention : VALVE FOR SUPPLYING A CERTAIN AMOUNT OF LIQUEFIED PETROLEUM GAS AND AUTOMATICALLY SHUTTING OFF ABNORMAL EXCESS GAS FLOW

(51) International classification	:F23N0005240000, F02D0019020000, F02M0021020000, F17C0013120000, B65D0083480000	(71)**Name of Applicant :** **1)SHIN, Il-Whan** Address of Applicant :317-201, Sangdo-Raemian APT, 8, Sangdo-ro 53-gil, Dongjak-gu, Seoul-06977, Republic of Korea Republic of Korea
(31) Priority Document No	:NA	(72)**Name of Inventor :** **1)SHIN, Il-Whan**
(32) Priority Date	:NA	
(33) Name of priority country	:NA	
(86) International Application No	:NA	
Filing Date	:NA	
(87) International Publication No	: NA	
(61) Patent of Addition to Application Number	:NA	
Filing Date	:NA	
(62) Divisional to Application Number	:NA	
Filing Date	:NA	

(57) Abstract :
The present invention relates to a valve for supplying a certain amount of liquefied petroleum gas and automatically shutting off abnormal excess gas flow, which discharges a certain amount of liquefied petroleum gas from a gas tank anytime, regardless of the period of using the gas tank, and which automatically shuts off the gas discharging from the gas tank when the gas leaks or excessively discharges such as if the gas tank falls down. A gas shutoff valve 10 according to the present invention basically comprises: a valve stem housing 11, a control valve 116 connected to an upper end of the valve stem housing 11, a valve stem 12 connected to a lower end of the control valve 116 and moving inside the valve stem housing 11, a cylinder 13 positioned inside the valve stem housing 11, a ball 16 for opening/closing a gas passageway, a cylinder holder 14 and a rubber packing 15.

No. of Pages : 18 No. of Claims : 2

(12) PATENT APPLICATION PUBLICATION
(19) INDIA
(22) Date of filing of Application :28/08/2019

(21) Application No.201911034736 A
(43) Publication Date : 05/03/2021

(54) Title of the invention : BIOMETRIC BASED ATTENDANCE SYSTEM AND A METHOD THEREOF

(51) International classification	:G06K0009000000, G06F0021320000, G07C0009000000, G06F0016583000, G06K0009620000
(31) Priority Document No	:NA
(32) Priority Date	:NA
(33) Name of priority country	:NA
(86) International Application No	:NA
Filing Date	:NA
(87) International Publication No	: NA
(61) Patent of Addition to Application Number	:NA
Filing Date	:NA
(62) Divisional to Application Number	:NA
Filing Date	:NA

(71)**Name of Applicant :**
1)Chandigarh Group of Colleges
Address of Applicant :Landran Kharar Banur Highway, Sector 112, Sahibzada Ajit Singh Nagar, Mohali, Punjab-140307, India. Punjab India
(72)**Name of Inventor :**
1)Ankita Sharma
2)Iqbaldeep Kaur
3)Vibhor Bhatnagar
4)Dr. Amit Verma
5)Harshmeet Kaur
6)Manpreet Singh Bajwa
7)Parth Goel
8)Gurleen Singh

(57) Abstract :
A biometric-based attendance system and a method thereof, wherein the system comprises of, reception modules attached to the system for obtaining information about user, a linkage module connected to reception module, a detection module attached to linkage module for detecting face and fingerprint of the user, a feature extraction module connected to the detection module, a comparison module connected to the feature extraction module for comparing extracted features with features stored in database, and a user interface is attached to display marked attendance. The method for biometric-based attendance system comprises, obtaining data to identify user using reception module, developing connection between obtained data, extracting facial and finger print features of user using feature extraction module, comparing data with the data stored in database, displaying marked attendance using user interface.

No. of Pages : 13 No. of Claims : 7

(12) PATENT APPLICATION PUBLICATION
(21) Application No.201911034737 A
(19) INDIA
(22) Date of filing of Application :28/08/2019
(43) Publication Date : 05/03/2021

(54) Title of the invention : SYSTEM AND METHOD FOR FORECASTING CREDIT RISK

(51) International classification	:G06Q0040020000, G06Q0010040000, G06N0003080000, G06N0020000000, G06N0005000000	(71)**Name of Applicant :** **1)Chandigarh Group of Colleges** Address of Applicant :Landran Kharar Banur Highway, Sector 112, Sahibzada Ajit Singh Nagar, Mohali, Punjab 140307, India. Punjab India
(31) Priority Document No	:NA	(72)**Name of Inventor :**
(32) Priority Date	:NA	**1)Dr. Amit Verma**
(33) Name of priority country	:NA	**2)Iqbaldeep Kaur**
(86) International Application No	:NA	**3)Manpreet Singh Bajwa**
Filing Date	:NA	
(87) International Publication No	: NA	
(61) Patent of Addition to Application Number	:NA	
Filing Date	:NA	
(62) Divisional to Application Number	:NA	
Filing Date	:NA	

(57) Abstract :
The present invention relates to a system and method for forecasting credit risk, wherein the system comprises of a data storage unit for storing a set of data, a data generation module for generating a set of values, indicating classifiers, an optimization module for optimizing generated classifiers and a training module that trains the system. The method for credit risk forecasting system comprises the steps of retrieving dataset from data storage unit, generating a set of values by employing the generation module, optimizing the classifier for reducing errors existing in the data by using the optimization module, classifying users in two different categories (i.e. defaulter or non-defaulter), training the system by the training module.

No. of Pages : 13 No. of Claims : 9

(12) PATENT APPLICATION PUBLICATION
(19) INDIA
(22) Date of filing of Application :28/08/2019

(21) Application No.201911034738 A
(43) Publication Date : 05/03/2021

(54) Title of the invention : MULTIPLE LANGUAGE SPEECH CONVERSION SYSTEM AND METHOD

(51) International classification	:G10L0015220000, G10L0015070000, G10L0015260000, G10L0015180000, G10L0013033000
(31) Priority Document No	:NA
(32) Priority Date	:NA
(33) Name of priority country	:NA
(86) International Application No	:NA
Filing Date	:NA
(87) International Publication No	: NA
(61) Patent of Addition to Application Number	:NA
Filing Date	:NA
(62) Divisional to Application Number	:NA
Filing Date	:NA

(71)**Name of Applicant :**
1)Chandigarh Group of Colleges
Address of Applicant :Landran Kharar Banur Highway, Sector 112, Sahibzada Ajit Singh Nagar, Mohali, Punjab-140307, India. Punjab India

(72)**Name of Inventor :**
1)Iqbaldeep Kaur
2)Dr. Amit Verma
3)Manpreet Singh Bajwa
4)Dhruv Bhasin

(57) Abstract :
The multiple language speech conversion system, comprises of, speech input module for entering speech, storage module that stores speech, pre-processing module for removing noise from the speech , data classification module for dividing speech into multiple of letters, feature extraction module that sorts the letters into a group of words and generating a dataset, regional language input module for entering regional language, training module for comparing dataset with regional language, conversion module for converting the dataset into a regional language(s) speech, speaker that plays regional language(s) speech. A method for text to speech conversion system, comprising the steps of entering speech, storing the speech, removing noise from the speech, dividing speech into multiple of letters, sorting the letters into the group of words and generating a dataset, entering regional language, comparing dataset with regional language(s), converting dataset into regional language(s) speech, playing converted speech.

No. of Pages : 13 No. of Claims : 7

(12) PATENT APPLICATION PUBLICATION
(21) Application No.201911034739 A
(19) INDIA
(22) Date of filing of Application :28/08/2019
(43) Publication Date : 05/03/2021

(54) Title of the invention : SYSTEM AND METHOD FOR PREDICTING CRIME RATE

(51) International classification	:G06Q0050280000, G06Q0010040000, G06N0005040000, F04D0027000000, G06Q0010000000	(71)**Name of Applicant :** **1)Chandigarh Group of Colleges** Address of Applicant :Landran Kharar Banur Highway, Sector 112, Sahibzada Ajit Singh Nagar, Mohali, Punjab-140307, India. Punjab India
(31) Priority Document No	:NA	(72)**Name of Inventor :**
(32) Priority Date	:NA	**1)Iqbaldeep Kaur**
(33) Name of priority country	:NA	**2)Dr. Amit Verma**
(86) International Application No	:NA	**3)Manpreet Singh Bajwa**
Filing Date	:NA	
(87) International Publication No	: NA	
(61) Patent of Addition to Application Number	:NA	
Filing Date	:NA	
(62) Divisional to Application Number	:NA	
Filing Date	:NA	

(57) Abstract :
The present invention relates to a system and method for predicting crime rate, wherein the system comprising a storage unit for storing pre-defined date, a processing unit for performing preprocessing of the pre-defined, an optimizing module for converting the processed data into clusters through K-means protocol, a prediction module for predicting crime rate upon analyzing the clusters through support vector machine, a graphical user interface (GUI) to display the predicted crime rate. The method for aforementioned comprises the steps of, storing pre-defined data in the storage unit, preprocessing of the pre-defined data through the processing unit, converting the processed data into clusters, predicting crime rate upon analyzing the clusters, displaying the crime rate on the GUI.

No. of Pages : 13 No. of Claims : 6

(12) PATENT APPLICATION PUBLICATION
(21) Application No.201911034740 A
(19) INDIA
(22) Date of filing of Application :28/08/2019
(43) Publication Date : 05/03/2021

(54) Title of the invention : SYSTEM FOR PROVIDING SERVICES TO USER(S) BASED ON PURCHASE BEHAVIOR

(51) International classification	:G06Q0030020000, G06Q0010060000, G06Q0030060000, A61B0005020500, G01N0035100000	(71)**Name of Applicant :** **1)Chandigarh Group of Colleges** Address of Applicant :Landran Kharar Banur Highway, Sector 112, Sahibzada Ajit Singh Nagar, Mohali, Punjab 140307, India. Punjab India
(31) Priority Document No	:NA	(72)**Name of Inventor :**
(32) Priority Date	:NA	**1)Dr. Amit Verma**
(33) Name of priority country	:NA	**2)Manpreet Singh Bajwa**
(86) International Application No	:NA	**3)Iqbaldeep Kaur**
Filing Date	:NA	
(87) International Publication No	: NA	
(61) Patent of Addition to Application Number	:NA	
Filing Date	:NA	
(62) Divisional to Application Number	:NA	
Filing Date	:NA	

(57) Abstract :
The present invention relates to customer classification system based on purchase behavior comprises of a data collection module installed in the system for collection customer profile, a data storing module for storing the customer profile, an extraction module associated with storing module for extracting information, an analyzation module linked with extraction module for analyzing stored data, and a testing module connected with analyzation module for training the data.

No. of Pages : 11 No. of Claims : 5

(12) PATENT APPLICATION PUBLICATION
(21) Application No.201911034742 A
(19) INDIA
(22) Date of filing of Application :28/08/2019
(43) Publication Date : 05/03/2021

(54) Title of the invention : A STANDALONE SECURITY DEVICE AND SYSTEM FOR INITIATING A PREEMPTIVE ACTION FOR PROVIDING A SAFE ENVIRONMENT TO WOMEN IN A VEHICLE

(51) International classification	:H04N0007180000, G08B0013196000, G08B0021120000, F42C0015000000, G08B0003100000
(31) Priority Document No	:NA
(32) Priority Date	:NA
(33) Name of priority country	:NA
(86) International Application No	:NA
Filing Date	:NA
(87) International Publication No	: NA
(61) Patent of Addition to Application Number	:NA
Filing Date	:NA
(62) Divisional to Application Number	:NA
Filing Date	:NA

(71)**Name of Applicant :**
1)THE LNM INSTITUTE OF INFORMATION TECHNOLOGY
Address of Applicant :Rupa ki Nangal, Post-Sumel, Via-Jamdoli Jaipur-302031, (Rajasthan) INDIA Rajasthan India
(72)**Name of Inventor :**
1)Preety Singh
2)Rajbir Kaur
3)Sunil Kumar

(57) Abstract :
The present invention generally relates to an intelligent smart urban transport system and a standalone security device and a system for initiating a pre-emptive action for providing a safe environment to women in a vehicle. The device detects various scenarios and preemptively initiates surveillance of the vehicle and thereby ensures safety of the female passenger.

No. of Pages : 30 No. of Claims : 10

(12) PATENT APPLICATION PUBLICATION
(19) INDIA
(22) Date of filing of Application :28/08/2019

(21) Application No.201911034767 A
(43) Publication Date : 05/03/2021

(54) Title of the invention : A MARINE PROPELLER

(51) International classification	:F04D0029380000, B63H0001140000, G06K0009320000, B63H0001260000, B63H0011080000	(71)**Name of Applicant :** **1)Chairman, Defence Research & Development Organisation (DRDO)** Address of Applicant :Ministry of Defence, Govt. of India, Room No. 348, B Wing, DRDO Bhawan, Rajaji Marg, New Delhi- 110011, India Delhi India
(31) Priority Document No	:NA	
(32) Priority Date	:NA	(72)**Name of Inventor :**
(33) Name of priority country	:NA	**1)Rama Krishna Varanasi**
(86) International Application No	:NA	**2)Venkata Satya Ganesh Kumar Pakki**
Filing Date	:NA	**3)Sankara Rao Challa**
(87) International Publication No	: NA	**4)Suryanarayana Cheepurupalli**
(61) Patent of Addition to Application Number	:NA	**5)Bangaru Babu Popuri**
Filing Date	:NA	
(62) Divisional to Application Number	:NA	
Filing Date	:NA	

(57) Abstract :
The present invention mainly relates to the field of marine propeller and its noise. In one embodiment, the propeller comprising: a hub having a central axis, one or more blades having blade length with a proximal end attached to the hub and a distal end extending radially outward from the hub, wherein the propeller has a diameter in between 360 - 400mm, wherein a combination of the diameter, pitch angle, skew angle, number of blades of the propeller provides required thrust and generates low noise.

No. of Pages : 23 No. of Claims : 9

(12) PATENT APPLICATION PUBLICATION
(19) INDIA
(22) Date of filing of Application :29/08/2019
(21) Application No.201911034775 A
(43) Publication Date : 05/03/2021

(54) Title of the invention : A DEVICE AND METHOD FOR CONCURENTLY ALIGNING COLLIMATION, CENTRE OF BRIGHTNESS AND CENTERING OF LIGHT IN A COHERENT LIGHT BEAM

(51) International classification	:G01B0011270000, G02B0027460000, G02B0007182000, G01B0011260000, G01B0005000000	(71)**Name of Applicant :** **1)COUNCIL OF SCIENTIFIC AND INDUSTRIAL RESEARCH** Address of Applicant :ANUSANDHAN BHAWAN, 2 RAFI MARG NEW DELHI-110001, INDIA Delhi India
(31) Priority Document No	:NA	(72)**Name of Inventor :**
(32) Priority Date	:NA	**1)POONAM ARORA**
(33) Name of priority country	:NA	**2)VATTIKONDA BHARATH**
(86) International Application No	:NA	**3)SUCHI YADAV**
Filing Date	:NA	**4)ASHISH AGARWAL**
(87) International Publication No	: NA	**5)VIJAY NARAIN OJHA**
(61) Patent of Addition to Application Number	:NA	**6)AMITAVA SEN GUPTA**
Filing Date	:NA	
(62) Divisional to Application Number	:NA	
Filing Date	:NA	

(57) Abstract :
The present invention relates to a device and method for concurrently aligning collimation, Centre of Brightness and centering in a coherent light beam. More particularly, a low cost and portable device for expansion, collimation, focusing and precise alignment of coherent light beam is designed and developed. The design of the beam expander involves producing a broader beam from a point source (fiber tip). Hence a telescope where we can fix a Piano convex lens of 150mm focal length and 50mm diameter by a retaining ring towards the front end is made. The back end of the telescope is attached with a translational stage having a PBS (Polarizing beam splitter) mount, two fixed arms (40mm x 10mm xlOmm), middle arm with a thin head (40mmx 5mmx5mm) and a base plate (40mm x 20mmx 2mm). The important advantage of this design is that it can be mounted in nay orientation not only vertical and horizontal at any other angle which cant be done with the heavy commercial translation stage. It can hold PBS, a wave plate and mirror mount and can have independent control of motion accurately. The, maximum error of the image on the screen which is placed at 98 cm from the lens is 0.25 mm which gives an accuracy of ±0.87 arc minute.

No. of Pages : 27 No. of Claims : 12

(12) PATENT APPLICATION PUBLICATION
(21) Application No.201911034776 A
(19) INDIA
(22) Date of filing of Application :29/08/2019
(43) Publication Date : 05/03/2021

(54) Title of the invention : A DEVICE AND METHOD FOR POSITIONING MICRO HOT PROBE FOR HEATING HOT ZONE BETWEEN MICRO HOT PROBE AND CHIRPED BRAG GRATING OPTICAL FIBER

(51) International classification	:G01N0021640000, G02F0001010000, G01J0005080000, G05D0023190000, B01L0007000000	(71)**Name of Applicant :** **1)COUNCIL OF SCIENTIFIC AND INDUSTRIAL RESEARCH** Address of Applicant :ANUSANDHAN BHAWAN, 2 RAFI MARG NEW DELHI-110001, INDIA Delhi India
(31) Priority Document No	:NA	(72)**Name of Inventor :**
(32) Priority Date	:NA	**1)TIWARI UMESH KUMAR**
(33) Name of priority country	:NA	**2)DAS SUPANKAR**
(86) International Application No	:NA	**3)DAS BHARGAB**
Filing Date	:NA	**4)MONDAL KUMAR SAMIR**
(87) International Publication No	: NA	**5)SINHA RAVINDRA KUMAR**
(61) Patent of Addition to Application Number	:NA	
Filing Date	:NA	
(62) Divisional to Application Number	:NA	
Filing Date	:NA	

(57) Abstract :
The Fiber testing device comprising of a micro hot probe positioning apparatus includes plurality of electro-mechanical and electronic control modules for accurate positioning of micro hot probe and switchable heating-cooling arrangement for heating and cooling micro hot probe to create hot zone over Chirped Brag Grating fiber. Functionally, the apparatus enables micro manipulation and positioning of micro hot probe with two translation motion and temperature control capability of hot zone over fiber. The micro hot probe positioning system employs a controllable electric power switching arrangement triggered by signal from heat sensor. Chirped Brag Grating fiber are connected to known light source and spectral analyzer detects thermo-optical effect capable to measure micro level change in both heat property of hot zone and optical properties of Chirped Brag Grating fiber.

No. of Pages : 24 No. of Claims : 11

(12) PATENT APPLICATION PUBLICATION

(19) INDIA

(22) Date of filing of Application :29/08/2019

(21) Application No.201911034805 A

(43) Publication Date : 05/03/2021

(54) Title of the invention : A NEW PROPOSED ELEMENTARY PROOF OF A NON TRIVIAL QUANTUM YANG MILLS THEORY EXISTS ON R4 AND HAS A MASS GAP DELTA > 0

(51) International classification :G21K0001000000,C10L0001020000,G11C0011406000,F26B0013100000,G09B0023060000

(31) Priority Document No :NA

(32) Priority Date :NA

(33) Name of priority country :NA

(86) International Application No :NA

Filing Date :NA

(87) International Publication No : NA

(61) Patent of Addition to Application Number :NA

Filing Date :NA

(62) Divisional to Application Number :NA

Filing Date :NA

(71)**Name of Applicant :**

1)Meghna Singh

Address of Applicant :Sweety House, Babu Ram Ka Hata, New Civil Lines, Hardoi Uttar Pradesh India

(72)**Name of Inventor :**

1)Meghna Singh

(57) Abstract :

It has been proved that electricity can give rise to magnetism and vice versa. A very simple example is that of anelectric transformer€ • that given. The exchanges take place inside the transformer that give rise to electromagnetic waves. Another fact about these waves is that they do not need a medium propagate although their speed is relatively slow when travelling through transparent substances. Another very useful application of electromagnetism is theCAT€ • scan machine Since fields interact with particles, it became clear by the late 1920s that an internally coherent account of nature must incorporate quantum concepts for fields as well as for particles. Mathematicians have always been fascinated by the problem of describing all solutions in whole numbers x,y,z to algebraic equations like x2 + y2 = z2 Euclid gave the complete solution for that equation, but for more complicated equations CAN becomes MORE EASY TO READ TO FIND THIS RESEARCH

No. of Pages : 46 No. of Claims : 1

(12) PATENT APPLICATION PUBLICATION
(21) Application No.201911034811 A
(19) INDIA
(22) Date of filing of Application :29/08/2019
(43) Publication Date : 05/03/2021

(54) Title of the invention :MODULAR REFRIGERATION SUBSYSTEMS FOR FROZEN CARBONATED BEVERAGE SYSTEMS€ •

(51) International classification	:F25B0005040000, F25B0041040000, F25B0009000000, F25B0040020000, F25B0040000000	(71)**Name of Applicant :** **1)Cornelius, Inc.** Address of Applicant :101 Broadway Street West, Osseo, Minnesota 55369, United States of America U.S.A. (72)**Name of Inventor :** **1)GREENBERG, Jacob C.** **2)DRESSER, Zachary** **3)SIWIEC, Austen J.** **4)CHOUGALE, Sandip Pandurang**
(31) Priority Document No	:NA	
(32) Priority Date	:NA	
(33) Name of priority country	:NA	
(86) International Application No	:NA	
Filing Date	:NA	
(87) International Publication No	: NA	
(61) Patent of Addition to Application Number	:NA	
Filing Date	:NA	
(62) Divisional to Application Number	:NA	
Filing Date	:NA	

(57) Abstract :
A refrigeration subsystem removably received within a base machine to cool an object. The subsystem includes a body with an opening that receives the object. An evaporator thermally communicates with the object, which is cooled by refrigerant flowing through the evaporator. A compressor receives the refrigerant downstream of the evaporator and increases a refrigerant pressure. A condenser receives the refrigerant downstream of the compressor, which cools the refrigerant. An expansion device receives the refrigerant downstream of the condenser and decreases its pressure, the evaporator being downstream from the expansion device. A refrigerant circuit fluidly couples the evaporator, compressor, condenser, and expansion device such that the refrigerant flows therebetween, all of which are coupled to the body and move together therewith. The refrigerant circuit forms a closed loop that remains unbroken when the body of the refrigerant subsystem is removed from the base machine.

No. of Pages : 37 No. of Claims : 20

(12) PATENT APPLICATION PUBLICATION
(21) Application No.201911034841 A
(19) INDIA
(22) Date of filing of Application :29/08/2019
(43) Publication Date : 05/03/2021

(54) Title of the invention : ANTENNA MOUNTING ASSEMBLY

(51) International classification	:H01Q0001120000, F16M0011200000, F16M0011240000, F16M0011100000, B62D0007060000	(71)**Name of Applicant :** **1)CommScope Technologies LLC** Address of Applicant :US Company of 1100 CommScope Place SE, Hickory, NC 28602, United States of America U.S.A. (72)**Name of Inventor :** **1)Shital Udagave**
(31) Priority Document No	:NA	
(32) Priority Date	:NA	
(33) Name of priority country	:NA	
(86) International Application No	:NA	
Filing Date	:NA	
(87) International Publication No	: NA	
(61) Patent of Addition to Application Number	:NA	
Filing Date	:NA	
(62) Divisional to Application Number	:NA	
Filing Date	:NA	

(57) Abstract :
An antenna mounting assembly includes: a clamping unit configured to clamp to a pole, the clamping unit comprising first and second clamps, the second clamp having first and second ends; a pair of flanges fixedly mounted to the second clamp; a proximal link pivotally attached to the flanges at locations between the first and second ends of the second clamp, the proximal link pivotable about a first axis; a distal link pivotally attached to the flanges about a second axis; and a mounting bracket pivotally attached to the distal link about a third axis, the mounting bracket configured for attachment to an antenna.

No. of Pages : 16 No. of Claims : 20

(12) PATENT APPLICATION PUBLICATION
(21) Application No.201911034871 A
(19) INDIA
(22) Date of filing of Application :29/08/2019
(43) Publication Date : 05/03/2021

(54) Title of the invention : COLLAPSIBLE BRAKE PEDAL STRUCTURE

(51) International classification	:B60T0007060000, B60R0021090000, G05G0001323000, G05G0001320000, G05G0001440000	(71)**Name of Applicant :** **1)MARUTI SUZUKI INDIA LIMITED** Address of Applicant :1, NELSON MANDELA ROAD, VASANT KUNJ, NEW DELHI - 110070, INDIA Delhi India
(31) Priority Document No	:NA	(72)**Name of Inventor :**
(32) Priority Date	:NA	**1)ARCHANA**
(33) Name of priority country	:NA	**2)RAKESH KUMAR SINHA**
(86) International Application No	:NA	**3)PIYUSH S JAIN**
Filing Date	:NA	**4)MASATOMO KAMEI**
(87) International Publication No	: NA	
(61) Patent of Addition to Application Number	:NA	
Filing Date	:NA	
(62) Divisional to Application Number	:NA	
Filing Date	:NA	

(57) Abstract :
The present disclosure relates to a collapsible brake pedal structure (200) for a vehicle. The structure (200) comprises an acute-angled shape release bracket (202) attached to a pedal bracket, a trigger bracket (204) attached with a steering column and facing opposite to the release bracket (202) in such a way that the release bracket (202) strikes the trigger bracket (204) at a point near to the mounting of the trigger bracket (204), and a brake pedal arm (206) provided with a stopper bracket (208) whose edge (208a) engages with edges (204a) of the trigger bracket (204) during the collapse of the brake pedal arm (206). The collapsible brake pedal structure (200) is faster in its functioning and efficient in rigidly preventing the brake pedal from intruding into the passenger compartment.

No. of Pages : 19 No. of Claims : 7

(12) PATENT APPLICATION PUBLICATION
(21) Application No.201911034872 A
(19) INDIA
(22) Date of filing of Application :29/08/2019
(43) Publication Date : 05/03/2021

(54) Title of the invention : REINFORCED SEAT STRUCTURE

(51) International classification	:B60R0019260000, B62D0021150000, B60G0003200000, B62K0011100000, A47C0004280000	(71)**Name of Applicant :** **1)MARUTI SUZUKI INDIA LIMITED** Address of Applicant :1 Nelson Mandela Road, Vasant Kunj, New Delhi-110070, India Delhi India
(31) Priority Document No	:NA	(72)**Name of Inventor :**
(32) Priority Date	:NA	**1)SAURABH JETHI**
(33) Name of priority country	:NA	**2)PRASAD PRABHAKAR LATKAR**
(86) International Application No	:NA	**3)ANKIT GARG**
Filing Date	:NA	
(87) International Publication No	: NA	
(61) Patent of Addition to Application Number	:NA	
Filing Date	:NA	
(62) Divisional to Application Number	:NA	
Filing Date	:NA	

(57) Abstract :
Described herein is a reinforced seat structure (100), comprising a first bracket (101) connected with a left end of a front cross pipe (105) and a front portion of a left riser panel (106); a second bracket (102) connected with a right end of the front cross pipe (105) and a front portion of a right riser panel (107); a third bracket (103) connected with a left end of a rear cross pipe (108) and a rear portion of the left riser panel (106). Further, the reinforced seat structure (100) includes a fourth bracket (104) connected at an inner side of front portion of the right riser panel (107). The reinforced seat structure provides proper overlap of the seat occupant with the airbag so as to reduce the injury caused to the occupant during a frontal offset crash.

No. of Pages : 26 No. of Claims : 11

(12) PATENT APPLICATION PUBLICATION
(21) Application No.201911034901 A
(19) INDIA
(22) Date of filing of Application :29/08/2019
(43) Publication Date : 05/03/2021

(54) Title of the invention : OPERATING USER EQUIPMENT DURING ROAMING

(51) International classification	:H04W0048180000, H04L0029060000, H04W0052020000, H04W0048200000, H04W0072000000
(31) Priority Document No	:NA
(32) Priority Date	:NA
(33) Name of priority country	:NA
(86) International Application No	:NA
Filing Date	:NA
(87) International Publication No	: NA
(61) Patent of Addition to Application Number	:NA
Filing Date	:NA
(62) Divisional to Application Number	:NA
Filing Date	:NA

(71)**Name of Applicant :**
1)Samsung Electronics Co., Ltd.
Address of Applicant :416 Maetan-Dong, Yeongtong-GU, Suwon-SI, Gyeonggi-do 442-742, Republic of Korea Republic of Korea
(72)**Name of Inventor :**
1)SINHA, Rahul
2)GUPTA, Sameer
3)DWIVEDI, Abhinav Kumar
4)ANAND, Saket
5)SINHA, Nirja

(57) Abstract :
A method of operating a UE during roaming is disclosed. The method comprises detecting expiry of an HPLMN timer during an ongoing MBMS session. The method further comprises calculating an idle time interval based on a DRX cycle of the UE and MBMS scheduling information. The method further comprises scanning a first set of channel frequencies listed in a VPLMN database based on the idle time interval, where the VPLMN database comprises a list of channel frequencies associated with at least one of an HPLMN and an EHPLMN

No. of Pages : 26 No. of Claims : 10

(12) PATENT APPLICATION PUBLICATION
(21) Application No.201911034909 A
(19) INDIA
(22) Date of filing of Application :29/08/2019
(43) Publication Date : 05/03/2021

(54) Title of the invention : MOUNTING STRUCTURE FOR COUPLERS

(51) International classification	:F25D0023000000, F01N0013180000, H01R0004480000, H05K0003340000, H01Q0025000000	(71)**Name of Applicant :** **1)MARUTI SUZUKI INDIA LIMITED** Address of Applicant :1 NELSON MANDELA ROAD, VASANT KUNJ, NEW DELHI-110070, INDIA. Delhi India
(31) Priority Document No	:NA	(72)**Name of Inventor :**
(32) Priority Date	:NA	**1)ABHINAV KUCHHAL**
(33) Name of priority country	:NA	**2)MADHAVI SINGH**
(86) International Application No	:NA	**3)HARIVANSH DAYAL**
Filing Date	:NA	
(87) International Publication No	: NA	
(61) Patent of Addition to Application Number	:NA	
Filing Date	:NA	
(62) Divisional to Application Number	:NA	
Filing Date	:NA	

(57) Abstract :
A mounting structure (100) is provided for holding couplers. The structure (100) comprises a mounting plate (102) configured to mount the structure (100) to a surface, a base plate (104) extending orthogonally from the mounting plate (102) and mounting legs (110. 114, 120, 124). First side (106) of the base plate (104) extends to form a base leg (108). The first mounting leg (110) extends orthogonally from the base leg (108) in a direction C. The second mounting leg (114) extends orthogonally from the first side (106) of the base plate (104) in the direction C. The third mounting leg (120) extends orthogonally from a second side (118) of the base plate (104) in a direction D. The fourth mounting leg (124) extends from a portion of an away end (136) of the base plate (104) in a direction C.

No. of Pages : 20 No. of Claims : 12

(12) PATENT APPLICATION PUBLICATION
(21) Application No.201911034930 A
(19) INDIA
(22) Date of filing of Application :29/08/2019
(43) Publication Date : 05/03/2021

(54) Title of the invention : N-(1-BENZYLPIPERIDIN-4-YL)-5-(4-(TRIFLUOROMETHYL)PHENYL)-1,3,4-OXADIAZOL-2-AMINE AS MULTITARGETED LIGAND TO TREAT ALZHEIMER€™S DISEASE

(51) International classification	:C07D0401120000, C07D0401060000, C07D0237340000, A61K0031502000, A01N0047020000	(71)**Name of Applicant :** **1)INDIAN INSTITUTE OF TECHNOLOGY (BANARAS HINDU UNIVERSITY), VARANASI** Address of Applicant :Varanasi-221005, Uttar Pradesh, India Uttar Pradesh India
(31) Priority Document No	:NA	(72)**Name of Inventor :**
(32) Priority Date	:NA	**1)PIYOOSH SHARMA**
(33) Name of priority country	:NA	**2)AVANISH TRIPATHI**
(86) International Application No	:NA	**3)PRABHASH NATH TRIPATHI**
Filing Date	:NA	**4)PRASHANT SALUNKE**
(87) International Publication No	: NA	**5)SUSHANT KUMAR SHRIVASTAVA**
(61) Patent of Addition to Application Number	:NA	
Filing Date	:NA	
(62) Divisional to Application Number	:NA	
Filing Date	:NA	

(57) Abstract :
The invention relates to novel chemical compounds and methods of making and using the same. In particular, the invention provides 7V-(l-Benzylpiperidin-4-yl)-5-(4-(trifluoromethyl)phenyl)-l,3,4-oxadiazol-2-amine for treatment or prevention of Alzheimers disease through its multifunctional activities against the disease. A method of preparation of N-(1 -benzylpiperidin-4-yl)-5-(4-(trifluoromethyl)phenyl)-l,3,4-oxadiazol-2-amine is also provided.

No. of Pages : 30 No. of Claims : 7

(12) PATENT APPLICATION PUBLICATION
(19) INDIA
(22) Date of filing of Application :29/08/2019
(21) Application No.201911034931 A
(43) Publication Date : 05/03/2021

(54) Title of the invention : SYNTHESIS OF 2-(4-BROMOPHENYL)-5-(4-(PYRIDIN-2-YL) PIPERAZIN-1-YL)-1,3,4-OXADIAZOLE FOR TREATING ALZHEIMER'S DISEASE AND METHOD OF PREPARATION THEREOF

(51) International classification	:A61K0051040000, C07D0303360000, C01F0007160000, C07C0323650000, C04B0035260000
(31) Priority Document No	:NA
(32) Priority Date	:NA
(33) Name of priority country	:NA
(86) International Application No	:NA
Filing Date	:NA
(87) International Publication No	: NA
(61) Patent of Addition to Application Number	:NA
Filing Date	:NA
(62) Divisional to Application Number	:NA
Filing Date	:NA

(71)**Name of Applicant :**
1)INDIAN INSTITUTE OF TECHNOLOGY (BANARAS HINDU UNIVERSITY), VARANASI
Address of Applicant :Varanasi-221005, Uttar Pradesh, India Uttar Pradesh India
(72)**Name of Inventor :**
1)AVANISH TRIPATHI
2)PIYOOSH SHARMA
3)PRIYANKA KUMARI CHOUBEY
4)SUSHANT KUMAR SHRIVASTAVA

(57) Abstract :
The present invention provides a novel compound for treating Alzheimers disease and a method of preparation thereof. More particularly, the present invention provides a novel compound 2-(4-Bromophenyi)-5-(4-(pyridin-2-yl) piperazin-l-yl)-l,3,4-oxadiazole which has multi-functional potential against Alzheimers disease and provides a method of preparation thereof.

No. of Pages : 28 No. of Claims : 9

(12) PATENT APPLICATION PUBLICATION
(21) Application No.201911034982 A
(19) INDIA
(22) Date of filing of Application :30/08/2019
(43) Publication Date : 05/03/2021

(54) Title of the invention : THREE-POSITION SWITCH FOR MOTOR VEHICLES

(51) International classification	:E05C0009040000, F16K0031000000, B60N0002900000, B60Q0001000000, H01R0013629000	(71)**Name of Applicant :** **1)NAPINO AUTO & ELECTRONICS LTD.** Address of Applicant :PLOT NUMBER 7, SECTOR 3, IMT MANESAR DISTT GURGAON HARYANA INDIA Haryana India
(31) Priority Document No	:NA	(72)**Name of Inventor :**
(32) Priority Date	:NA	**1)VERMA, Suneel**
(33) Name of priority country	:NA	**2)SINGH, Dinesh**
(86) International Application No	:NA	
Filing Date	:NA	
(87) International Publication No	: NA	
(61) Patent of Addition to Application Number	:NA	
Filing Date	:NA	
(62) Divisional to Application Number	:NA	
Filing Date	:NA	

(57) Abstract :
Disclosed is a three-position switch that comprises a housing (202); an axis defining element (204) located in an interior portion (206) of the housing (202); a lever element (208) traversing partly into the interior portion (206) of the housing (202), the lever element (208) defining a first end (210) located in the interior portion (206) of the housing (202), a second end (212) located outside the housing (202), and a first aperture (214) that co-operates with the axis defining element (204) to allow a pivotal movement of the lever element (208); a first encased switch (216) located within the housing (202) on a first side of the lever element (208) and adapted to be actuated by the pivotal movement of the lever element (208); and a second encased switch (218) located within housing (202) on a second side of the lever element (208) and adapted to be actuated by the pivotal movement of the lever element (208).

No. of Pages : 16 No. of Claims : 8

(12) PATENT APPLICATION PUBLICATION
(21) Application No.201911035019 A
(19) INDIA
(22) Date of filing of Application :30/08/2019
(43) Publication Date : 05/03/2021

(54) Title of the invention : LOW PROFILE WALL RECEPTACLE FOR USE WITH AN ELECTRICAL COMPONENT

(51) International classification	:G06F0001180000, H01R0009240000, H01M0002180000, F16D0065092000, H02G0003140000	(71)**Name of Applicant :** **1)Honeywell International Inc.** Address of Applicant :115 Tabor Road, Morris Plains, NJ 07950, United States of America, U.S.A. (72)**Name of Inventor :** **1)Wang, Chenghao** **2)Kumar, Arvind** **3)Singh, Dilip** **4)Kumar, Abhishek**
(31) Priority Document No	:NA	
(32) Priority Date	:NA	
(33) Name of priority country	:NA	
(86) International Application No	:NA	
Filing Date	:NA	
(87) International Publication No	: NA	
(61) Patent of Addition to Application Number	:NA	
Filing Date	:NA	
(62) Divisional to Application Number	:NA	
Filing Date	:NA	

(57) Abstract :
A low profile wall receptacle for securing an electrical wall component to a wall includes a carrier plate having one or more stops that are set back from a back side of the carrier plate. The one or more stops of the carrier plate are configured to engage one or more corresponding stops of an electrical wall component such that the electrical wall component may slide into an aperture of the carrier plate until the one or more stops of the electrical wall component engages the one or more set back stops of the carrier plate. A cover plate is releasably securable to the carrier plate for covering the carrier plate while exposing at least part of the electrical wall component for use by a user. The cover plate includes a recess for receiving at least part of the carrier plate.

No. of Pages : 28 No. of Claims : 20

(12) PATENT APPLICATION PUBLICATION
(19) INDIA
(22) Date of filing of Application :30/08/2019
(21) Application No.201911035035 A
(43) Publication Date : 05/03/2021

(54) Title of the invention : AN IMPROVED LOCKING MECHANISM FOR LADLE SLIDE GATE PROVIDING HIGHLY STRONG LOCKING OF THE SLIDE PLATE

(51) International classification	:E05D0015060000, E04G0007160000, B21H0009000000, E04H0015500000, F01L0001180000
(31) Priority Document No	:NA
(32) Priority Date	:NA
(33) Name of priority country	:NA
(86) International Application No	:NA
Filing Date	:NA
(87) International Publication No	: NA
(61) Patent of Addition to Application Number	:NA
Filing Date	:NA
(62) Divisional to Application Number	:NA
Filing Date	:NA

(71)**Name of Applicant :**
1)NEU SCIENCE AND METALLURGICAL TECHNOLOGY PRIVATE LIMITED
Address of Applicant :F-30, Ground Floor, Sector 63, Gautam Buddha Nagar, Noida, Uttar Pradesh-201301, India Uttar Pradesh India
(72)**Name of Inventor :**
1)CHEN XUDONG
2)GAO JIAN
3)ZHANG WENXIN
4)CAI CHUNYUN
5)ZHAN DONGPING
6)PENG KEWU

(57) Abstract :
The present invention provides an improved locking mechanism for ladle slide gate, with improved locking safety of the slide plate wherein the said locking mechanism comprises a frame (1), a corner fixing block (3), an adjusting bolt (4) and a corner connecting block (6). The adjusting bolt (4) passes through the corner fixing block (3) and is fixed on the upper part inside the frame (1), and the lower end of the bolt is connected to the upper end of the corner connecting block (6). The adjusting bolt (4) can rotate along its own main shaft. The two ends of the corner connecting block are symmetrically hinged with arc-shaped movable corner blocks (2) and the arc faces of the two arc-shaped movable corner blocks (2) respectively contact against the inner wall of the frame. The upper end of the adjusting bolt (4) is used for locking the slide plate.

No. of Pages : 22 No. of Claims : 10

(12) PATENT APPLICATION PUBLICATION
(21) Application No.201911035036 A
(19) INDIA
(22) Date of filing of Application :30/08/2019
(43) Publication Date : 05/03/2021

(54) Title of the invention : A DOOR PANEL ARRANGEMENT FOR MOUNTING OF WEATHER-STRIP

(51) International classification	:F16B0019100000, F01D0025240000, B62D0025040000, B32B0007080000, F23D0014040000	(71)**Name of Applicant :** **1)MARUTI SUZUKI INDIA LIMITED** Address of Applicant :1, NELSON MANDELA ROAD, VASANT KUNJ, NEW DELHI - 110070, INDIA Delhi India
(31) Priority Document No	:NA	(72)**Name of Inventor :**
(32) Priority Date	:NA	**1)AMRINDER SINGH SIDHU**
(33) Name of priority country	:NA	**2)NILESH LAXMANBHAI RATHOD**
(86) International Application No	:NA	**3)VIJAINDER SINGH**
Filing Date	:NA	**4)TARUN GUPTA**
(87) International Publication No	: NA	**5)TARANDEEP SINGH**
(61) Patent of Addition to Application Number	:NA	**6)RAGHAVENDRA KATTI**
Filing Date	:NA	
(62) Divisional to Application Number	:NA	
Filing Date	:NA	

(57) Abstract :
The door panel arrangement for mounting of weather-strip (201), comprising of an outer reinforcement (202) having a head shaped configuration (203) on its upper end with an opening (204) where a latch member (205) with its rivet shaped configuration (208) is locked. The latch member (205) also has the multi flange configuration (207) which is further interlocked with multi flange leg (206) of a weather-strip (201).

No. of Pages : 17 No. of Claims : 5

(12) PATENT APPLICATION PUBLICATION
(21) Application No.201911035037 A
(19) INDIA
(22) Date of filing of Application :30/08/2019
(43) Publication Date : 05/03/2021

(54) Title of the invention : A MOUNTING ASSEMBLY TO MOUNT A TRIM QUARTER UPPER ON BODY PANEL OF A VEHICLE

(51) International classification	:B21B0013140000, B60R0013020000, A01K0001030000, B60J0010700000, F16B0005060000	(71)**Name of Applicant :** **1)MARUTI SUZUKI INDIA LIMITED** Address of Applicant :1 NELSON MANDELA ROAD, VASANT KUNJ, NEW DELHI-110070, INDIA. Delhi India
(31) Priority Document No	:NA	(72)**Name of Inventor :**
(32) Priority Date	:NA	**1)ASHISH KUMAR SONI**
(33) Name of priority country	:NA	**2)ANKIT NIGAM**
(86) International Application No	:NA	**3)RAMAN GARG**
Filing Date	:NA	**4)ARNAB SANDILYA**
(87) International Publication No	: NA	
(61) Patent of Addition to Application Number	:NA	
Filing Date	:NA	
(62) Divisional to Application Number	:NA	
Filing Date	:NA	

(57) Abstract :
The present disclosure relates to a mounting assembly to mount a trim 5 quarter upper on body panel of a vehicle. The mounting assembly includes a plurality of doghouse mountings provided on linear contour and curved contour of the trim quarter upper respectively. The doghouse mounting provided on the curved contour has one of the legs molded with an extending wall. The extending wall is perpendicular to the curved contour of the trim quarter upper.

No. of Pages : 17 No. of Claims : 9

(12) PATENT APPLICATION PUBLICATION
(19) INDIA
(22) Date of filing of Application :30/08/2019
(21) Application No.201911035055 A
(43) Publication Date : 05/03/2021

(54) Title of the invention : BENDABLE OPTICAL FIBRE CABLE

(51) International classification	:G02B0006440000, G03F0007039000, F16L0011120000, B62D0001060000, H02G0003060000
(31) Priority Document No	:NA
(32) Priority Date	:NA
(33) Name of priority country	:NA
(86) International Application No	:NA
Filing Date	:NA
(87) International Publication No	: NA
(61) Patent of Addition to Application Number	:NA
Filing Date	:NA
(62) Divisional to Application Number	:NA
Filing Date	:NA

(71)**Name of Applicant :**
1)Sterlite Technologies Limited
Address of Applicant :House No. IFFCO Tower, 3rd Floor, Plot No.3, Street Sector 29 City Gurgaon State Haryana Country India Pin code 122002 Haryana India
(72)**Name of Inventor :**
1)Sravan Kumar
2)Manoj Mittal

(57) Abstract :
ABSTRACT BENDABLE OPTICAL FIBRE CABLE The present disclosure provides a bendable optical fibre cable (100). The bendable optical fibre cable (100) includes one or more ribbon stacks (104) and an outer sheath (108). The one or more ribbon stacks (104) includes the plurality of optical fibers. In addition, the outer sheath (108) is made up of a composite material characterized with low flexural modulus. The composite material has a base compound. The base compound of the composite material of the outer sheath (108) includes polyethylene. FIG. 1

No. of Pages : 16 No. of Claims : 9

(12) PATENT APPLICATION PUBLICATION
(21) Application No.201911035060 A
(19) INDIA
(22) Date of filing of Application :30/08/2019
(43) Publication Date : 05/03/2021

(54) Title of the invention : MOBILE MODULAR RAMP ASSEMBLY

(51) International classification	:B60P0001430000, A61G0003060000, B65G0001040000, A47F0007000000, B61D0003180000	
(31) Priority Document No	:NA	
(32) Priority Date	:NA	
(33) Name of priority country	:NA	
(86) International Application No	:NA	
Filing Date	:NA	
(87) International Publication No	: NA	
(61) Patent of Addition to Application Number	:NA	
Filing Date	:NA	
(62) Divisional to Application Number	:NA	
Filing Date	:NA	

(71)**Name of Applicant :**
1)Chairman, Defence Research And Development Organisation (DRDO)
Address of Applicant :Ministry Of Defence, Govt. of India, Room No. 348, B- Wing, DRDO Bhawan, Rajaji Marg, New Delhi-110011, India Delhi India
(72)**Name of Inventor :**
1)SHARMA, Pankaj Kumar
2)TYAGI, Amit
3)TANWAR, Rajesh Kumar
4)SINGH, Ramesh Kumar
5)KUMAR, Shio

(57) Abstract :
A mobile modular ramp assembly (100) for loading and unloading of commodities in a rail wagon is disclosed. The mobile modular ramp assembly (100) includes a plurality of base structures (102) adapted to be horizontally mounted on rails (104). The mobile modular ramp assembly (100) includes a plurality of supporting columns (106) adapted to be mounted on the plurality of base structures (102). The supporting columns (106) is positioned such that a height of a supporting column (106) closer in distance to the rail wagon is more than a height of a supporting column (106) farther from the rail wagon. The mobile modular ramp assembly (100) includes a plurality of girders (202) adapted to be mounted on the supporting columns (106), and a plurality of plates (108) adapted to be mounted on the girders (202), and is coupled to each other to form a ramp for transporting the commodities to and from the rail wagon. Each of the base structures (102), the supporting columns (106), the girders (202), and the plates (108) is individually replaceable.

No. of Pages : 27 No. of Claims : 10

(12) PATENT APPLICATION PUBLICATION
(21) Application No.201911035085 A
(19) INDIA
(22) Date of filing of Application :30/08/2019
(43) Publication Date : 05/03/2021

(54) Title of the invention : BI-STABLE MICROELECTROMECHANICAL SYSTEM (MEMS) BASED NON-VOLATILE MEMORY CELL WITH PIEZOELECTRIC RESET MECHANISM

(51) International classification	:H01H0059000000, H03H0009100000, H01T0013320000, H01L0029808000, H01H0050000000	(71)**Name of Applicant :** **1)INDIAN INSTITUTE OF TECHNOLOGY DELHI** Address of Applicant :Hauz Khas, New Delhi-110016, India Delhi India
(31) Priority Document No	:NA	(72)**Name of Inventor :** **1)PUSHPAPRAJ SINGH**
(32) Priority Date	:NA	**2)DHAIRYA SINGH ARYA**
(33) Name of priority country	:NA	**3)UDIT JAIN**
(86) International Application No	:NA	**4)SUSHIL KUMAR**
Filing Date	:NA	
(87) International Publication No	: NA	
(61) Patent of Addition to Application Number	:NA	
Filing Date	:NA	
(62) Divisional to Application Number	:NA	
Filing Date	:NA	

(57) Abstract :
Described herein is a bi-stable microelectromechanical system (MEMS) based non-volatile memory cell system (500) for data storage in a harsh environment. The system (500) includes an elongated base substrate; a contact electrode formed on a first end of the base substrate, wherein the contact electrode includes a piezoelectric bottom pad (503) on which an aluminum oxide bar (502) is formed parallel and in between a pair of piezoelectric bars (501); an actuation electrode (504) formed, adjacent to the contact electrode, on the base substrate; and a cantilever electrode (505) formed at a second end of the base substrate. The cantilever electrode (505) includes a base slab portion projected above the base substrate and a flange connected to the top of the base slab portion, wherein the flange covers the entire base substrate so as to contact the contact electrode when pulled by the actuation electrode.

No. of Pages : 27 No. of Claims : 7

(12) PATENT APPLICATION PUBLICATION
(21) Application No.201911035087 A
(19) INDIA
(22) Date of filing of Application :30/08/2019
(43) Publication Date : 05/03/2021

(54) Title of the invention : JOINERY STRUCTURE FOR CONNECTING HOLDER COMPONENT AND LEG COMPONENT OF VEHICLE CYLINDER HOLDER

(51) International classification	:F16L0003223000, H04N0005235000, F16L0003000000, H02G0003320000, A61B0017800000	(71)**Name of Applicant :** **1)MARUTI SUZUKI INDIA LIMITED** Address of Applicant :1, NELSON MANDELA ROAD, VASANT KUNJ, NEW DELHI - 110070, INDIA Delhi India
(31) Priority Document No	:NA	(72)**Name of Inventor :**
(32) Priority Date	:NA	**1)ROBIN AGARWAL**
(33) Name of priority country	:NA	**2)AMULYA KALI RAY**
(86) International Application No	:NA	**3)RAJDEEP SINGH KHURANA**
Filing Date	:NA	
(87) International Publication No	: NA	
(61) Patent of Addition to Application Number	:NA	
Filing Date	:NA	
(62) Divisional to Application Number	:NA	
Filing Date	:NA	

(57) Abstract :
The present disclosure relates to a joinery structure for connecting a holder component (202) and a leg component (204) of a vehicle cylinder holder (200). The joinery structure comprises of a combination of three brackets - a first bracket (212) attached with a cradle pipe (206) of the holder component (202), a second bracket (214) attached with a vertical leg pipe (208) of the leg component (204) and a third bracket (216) attached with a horizontal leg pipe (210) of leg component (204). The structure further comprises fasteners (218) fastened with the fastening nuts (212a) welded to the first fastener openings and passes through the second fastener openings (214a) and the third fastener openings (216a) in such a way that the third fastener openings (216a) are sandwiched between the first fastener openings and the second fastener openings (214a).

No. of Pages : 25 No. of Claims : 10

(12) PATENT APPLICATION PUBLICATION
(21) Application No.201911035104 A
(19) INDIA
(22) Date of filing of Application :30/08/2019
(43) Publication Date : 05/03/2021

(54) Title of the invention : CAN CONTROLLER AND METHOD FOR TRANSMITTING AND RECEIVING CAN DATA FRAME

(51) International classification	:H04L0012400000, A61B0001040000, H04L0012640000, H04L0029060000, B60R0021000000
(31) Priority Document No	:NA
(32) Priority Date	:NA
(33) Name of priority country	:NA
(86) International Application No	:NA
Filing Date	:NA
(87) International Publication No	: NA
(61) Patent of Addition to Application Number	:NA
Filing Date	:NA
(62) Divisional to Application Number	:NA
Filing Date	:NA

(71)**Name of Applicant :**
1)MARUTI SUZUKI INDIA LIMITED
Address of Applicant :1 Nelson Mandela Road, Vasant Kunj, New Delhi-110070, India. Delhi India
(72)**Name of Inventor :**
1)MANVEEN KAUR
2)UCHIT SHARMA

(57) Abstract :
Described herein is a CAN controller (400) for transmitting and receiving CAN message data via CAN bus (200). Based on the data to be transmitted, the CAN controller (400) calculates data length of the CAN message data and number of frames. Further, the data is fragmented and sequenced into different CAN frames when size of the CAN message data is more than 7 bytes. Each CAN frame has a data field and a sequence number field. The CAN controller (400) transmits the generated number of CAN data frames to the CAN bus (200).

No. of Pages : 35 No. of Claims : 18

(12) PATENT APPLICATION PUBLICATION
(21) Application No.201911035126 A
(19) INDIA
(22) Date of filing of Application :30/08/2019
(43) Publication Date : 05/03/2021

(54) Title of the invention : COMPOSITIONS OF FRUIT INGREDIENTS FOR COATING FOOD, PROCESS FOR THEIR PREPARATION AND PRODUCTS CONTAINING THEM

(51) International classification	:A23L0007157000, A23P0010350000, A23L0002020000, A23G0009320000, A23L0029100000
(31) Priority Document No	:NA
(32) Priority Date	:NA
(33) Name of priority country	:NA
(86) International Application No	:NA
Filing Date	:NA
(87) International Publication No	: NA
(61) Patent of Addition to Application Number	:NA
Filing Date	:NA
(62) Divisional to Application Number	:NA
Filing Date	:NA

(71)**Name of Applicant :**
1)INTERNATIONAL BEAR BREWERIES LTD.
Address of Applicant :A Gat Givat Haim operation Givat Haim M.P. Hefer 3898300, Israel Israel
(72)**Name of Inventor :**
1)GHENDLER, Yuval
2)MEDINI, Omer
3)Amit GUY

(57) Abstract :
The present invention is directed to fruit flavored composition for coating farinaceous food material comprising fruit source, emulsifier, oil, dietary fibers and water, to fruit flavored farinaceous food material coated with the composition, to a process for preparing the coating composition and to a process for coating the farinaceous food material.

No. of Pages : 15 No. of Claims : 14

(12) PATENT APPLICATION PUBLICATION
(21) Application No.201911035127 A
(19) INDIA
(22) Date of filing of Application :30/08/2019
(43) Publication Date : 05/03/2021

(54) Title of the invention : PROCESS FOR DETECTING NERVE AGENTS IN AQUEOUS MEDIUM

(51) International classification	:G01N0021640000, G01N0033180000, G01N0033520000, D21H0023760000, G01N0031220000
(31) Priority Document No	:NA
(32) Priority Date	:NA
(33) Name of priority country	:NA
(86) International Application No	:NA
Filing Date	:NA
(87) International Publication No	: NA
(61) Patent of Addition to Application Number	:NA
Filing Date	:NA
(62) Divisional to Application Number	:NA
Filing Date	:NA

(71)**Name of Applicant :**
1)CHAIRMAN, DEFENCE RESEARCH & DEVELOPMENT ORGANISATION
Address of Applicant :Ministry of Defence, Govt. of India, Room No 348, B-Wing, DRDO Bhawan, Rajaji Marg, New Delhi 110 011, India Delhi India
(72)**Name of Inventor :**
1)RAO, Vepa Kameswara
2)SHAIK, Mahabul
3)GUPTA, Manish
4)HALDER, Mithun
5)ACHARYA, Jyotiranjan
6)BATHAM, Sushil
7)YADAV, Abhishek Kumar Singh
8)SADHUKHA, Dipankar

(57) Abstract :
The present disclosure discloses aprocess for detecting nerve agent in a water sample, the process comprising: (a) contacting at least one ketoxime and at least one solvent to obtain a first mixture; (b) contacting the water sample, at least one nanosensor, and the first mixture to obtain a detectable reaction product; and (c) detecting the detectable reaction product, thereby detecting the nerve agent, wherein the water sample to the at least one nanosensor to the first mixture molar ratio is in a range of 0.1:1:4- 10:10:40. Moreover, a device for detecting the presence of nerve agent is also disclosed.

No. of Pages : 30 No. of Claims : 13

(12) PATENT APPLICATION PUBLICATION
(19) INDIA
(22) Date of filing of Application :30/08/2019
(21) Application No.201911035129 A
(43) Publication Date : 05/03/2021

(54) Title of the invention : COMPOSITIONS OF FRUIT INGREDIENTS, PROCESS FOR THEIR PREPARATION AND PRODUCTS CONTAINING THEM

(51) International classification	:A23L0033220000, A23L0029100000, B01D0063020000, A23L0007100000, A23L0033120000
(31) Priority Document No	:NA
(32) Priority Date	:NA
(33) Name of priority country	:NA
(86) International Application No	:NA
Filing Date	:NA
(87) International Publication No	: NA
(61) Patent of Addition to Application Number	:NA
Filing Date	:NA
(62) Divisional to Application Number	:NA
Filing Date	:NA

(71)**Name of Applicant :**
1)INTERNATIONAL BEAR BREWERIES LTD.
Address of Applicant :A Gat Givat Haim operation Givat Haim M.P. Hefer 3898300, Israel Israel
(72)**Name of Inventor :**
1)GHENDLER, Yuval
2)MEDINI, Omer
3)Amit GUY

(57) Abstract :
The invention is directed to a fruit flavored composition additive to farinaceous based material comprising a fruit source, starch, water and nutritional fiber, to a process for preparing the composition and to a fruit flavored farinaceous based material.

No. of Pages : 19 No. of Claims : 16

(12) PATENT APPLICATION PUBLICATION
(21) Application No.201911035151 A
(19) INDIA
(22) Date of filing of Application :30/08/2019
(43) Publication Date : 05/03/2021

(54) Title of the invention : METHOD AND SYSTEM FOR USER AUTHENTICATION BASED CONTROL OF ELECTRICAL APPLIANCES

(51) International classification	:H04L0029060000, H04L0009320000, H04W0012060000, G09C0001000000, H04L0029120000
(31) Priority Document No	:NA
(32) Priority Date	:NA
(33) Name of priority country	:NA
(86) International Application No	:NA
Filing Date	:NA
(87) International Publication No	: NA
(61) Patent of Addition to Application Number	:NA
Filing Date	:NA
(62) Divisional to Application Number	:NA
Filing Date	:NA

(71)**Name of Applicant :**
1)AviSOFT System Private Limited
Address of Applicant :B-190, Sector-71, Noida-201307, Uttar Pradesh, India. Uttar Pradesh India
(72)**Name of Inventor :**
1)GUPTA, Tarun
2)DWIVEDI, Shishir Kumar

(57) Abstract :
The present disclosure relates to a method comprising steps of connecting a user mobile device (UMD) associated with a first user to an open wireless network (OWN), wherein the UMD is communicatively coupled with an authentication server through a hardware device bridge (HDB), said HDB being configured to generate a unique passcode based at least on a unique hardware attribute of said UMD and transmit said unique passcode to said UMD and to said authentication server; sending, upon a second user initiating an authentication protocol, to said UMD, a link that generates authentication data when acted upon by the first user, said authentication data comprising said hardware attribute; receiving, by said authentication server, a second passcode from the second user through a computing device, said second passcode being entered by the first user; and matching the unique passcode with the second passcode to authenticate the first user.

No. of Pages : 32 No. of Claims : 10

(12) PATENT APPLICATION PUBLICATION
(21) Application No.201911035152 A
(19) INDIA
(22) Date of filing of Application :30/08/2019
(43) Publication Date : 05/03/2021

(54) Title of the invention : BREAKAWAY SIDE EXTENDER BRACKET

(51) International classification	:F01D0011000000, A61B0017880000, F03D0001060000, E04B0001360000, F16B0031020000	(71)**Name of Applicant :** **1)Daimler AG** Address of Applicant :70546 Stuttgart, Germany. Germany (72)**Name of Inventor :** **1)Mr. Steven Griffiths** **2)Mr. Prathviraj Eshwarbhat**
(31) Priority Document No	:NA	
(32) Priority Date	:NA	
(33) Name of priority country	:NA	
(86) International Application No	:NA	
Filing Date	:NA	
(87) International Publication No	: NA	
(61) Patent of Addition to Application Number	:NA	
Filing Date	:NA	
(62) Divisional to Application Number	:NA	
Filing Date	:NA	

(57) Abstract :
A sacrificial bracket 110 for preventing transfer of a damaging force between a first component and a second component is disclosed, having a first leg 112 coupled to the first component, a second leg 114 coupled to the second component, and an elbow portion 212 joining the two legs. Cross-section of the legs 112/114 includes at least one flange 202/204 on any or both of upper and lower sides of a generally flat member 206/208, and the elbow portion 212 has a weaker cross-section. At least one flange 202/204 of first leg 112 and second leg 114 are coupled to each other through one or more shear rivets 210 that are adapted to get sheared when force between the legs 112/114 exceeds a threshold value. Shearing of shear rivets 210 causes bracket 110 to bend at elbow portion 212 to allow relative displacement between the two components.

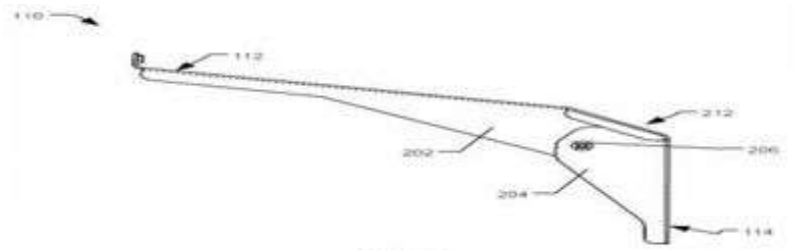

FIG. 2A

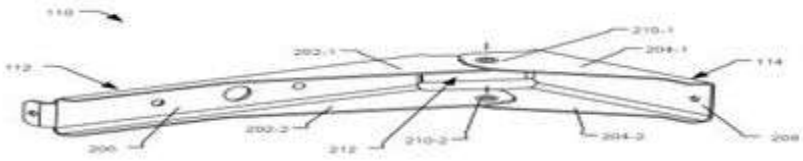

FIG. 2B

No. of Pages : 13 No. of Claims : 8

(12) PATENT APPLICATION PUBLICATION

(19) INDIA

(22) Date of filing of Application :29/08/2019

(21) Application No.201911035154 A

(43) Publication Date : 05/03/2021

(54) Title of the invention : A NEW PROPOSED ELEMENTARY PROOF OF THE YANG MILLS THEORY EXISTS ON R4 AND HAS A MASS GAP DELTA > 0

(51) International classification :G21K0001000000,C10L0001020000,G11C0011406000,F26B0013100000,G09B0023060000

(31) Priority Document No :NA

(32) Priority Date :NA

(33) Name of priority country :NA

(86) International Application No :NA

Filing Date :NA

(87) International Publication No : NA

(61) Patent of Addition to Application Number :NA

Filing Date :NA

(62) Divisional to Application Number :NA

Filing Date :NA

(71)**Name of Applicant :**

1)Meghna Singh

Address of Applicant :Sweety House, Babu Ram Ka Hata, new Civil Lines, Hardoi Uttar Pradesh India

(72)**Name of Inventor :**

1)Meghna Singh

(57) Abstract :

It has been proved that electricity can give rise to magnetism and vice versa. A very simple example is that of anelectric transformer€ • that given. The exchanges take place inside the transformer that give rise to electromagnetic waves. Another fact about these waves is that they do not need a medium propagate although their speed is relatively slow when travelling through transparent substances. Another very useful application of electromagnetism is theCAT€ • scan machine Since fields interact with particles, it became clear by the late 1920s that an internally coherent account of nature must incorporate quantum concepts for fields as well as for particles. Mathematicians have always been fascinated by the problem of describing all solutions in whole numbers x,y,z to algebraic equations like x2 + y2 = z2 Euclid gave the complete solution for that equation, but for more complicated equations CAN becomes MORE EASY TO READ TO FIND THIS RESEARCH

No. of Pages : 45 No. of Claims : 1

(12) PATENT APPLICATION PUBLICATION
(19) INDIA
(22) Date of filing of Application :31/08/2019

(21) Application No.201911035187 A
(43) Publication Date : 05/03/2021

(54) Title of the invention : NOVEL SCORPION TYPE LOCK

(51) International classification	:C07K0014435000, A41B0011000000, A47F0005000000, B60J0010800000, B65D0047060000
(31) Priority Document No	:NA
(32) Priority Date	:NA
(33) Name of priority country	:NA
(86) International Application No	:NA
Filing Date	:NA
(87) International Publication No	: NA
(61) Patent of Addition to Application Number	:NA
Filing Date	:NA
(62) Divisional to Application Number	:NA
Filing Date	:NA

(71)**Name of Applicant :**
1)Sudhanshu Kumar
Address of Applicant :Mr. Sudhanshu Kumar, Proprietor HESOMO Enterprises, 171, B-8, Gulmohar City, Dera Bassi, SAS Nagar, Punjab-140507 Mobile No.: 8699530866, E-mail-hesomo.enterprises@gmail.com Punjab India
(72)**Name of Inventor :**
1)Sudhanshu Kumar

(57) Abstract :
The Invention relates to a novel curvature type scorpion lock consisting of a tapered rectangular capsule having bottom body portion closed and at the end of the height is open having the small collar shape at four sides. The invention also relates to two projected profiles on two small sides allowing to enter the second part of the body having scorpion type locks which engaged to the small side projected profiles to make an undetectable locking and is connected to the first part of the body with the help of plastic or metal string which also used for sealing

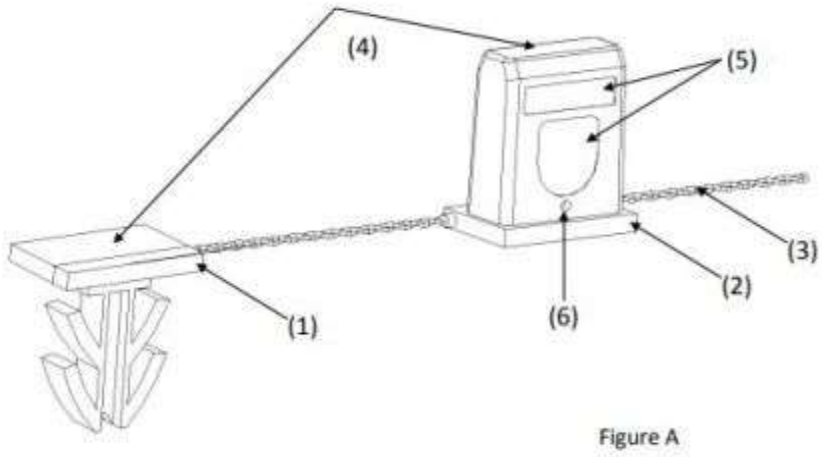

Figure A

No. of Pages : 17 No. of Claims : 9

(12) PATENT APPLICATION PUBLICATION
(21) Application No.201911035205 A
(19) INDIA
(22) Date of filing of Application :31/08/2019
(43) Publication Date : 05/03/2021

(54) Title of the invention : AN INDUSTRIAL PROCESS FOR THE PREPARATION OF PURE METARAMINOL OR SALTS THEREOF

(51) International classification	:C07C0213020000, C07D0213730000, C12P0013040000, C07D0213690000, C12P0041000000	(71)**Name of Applicant :** **1)IND-SWIFT LABORATORIES LIMITED** Address of Applicant :S.C.O. No. 850, Shivalik Enclave, NAC Manimajra Chandigarh India **2)AFT Pharmaceuticals**
(31) Priority Document No	:NA	(72)**Name of Inventor :**
(32) Priority Date	:NA	**1)SARIN GURDEEP SINGH**
(33) Name of priority country	:NA	**2)VYAS SANDEEP**
(86) International Application No	:NA	**3)KUMAR VISHAL**
Filing Date	:NA	**4)ATKINSON HARTLEY**
(87) International Publication No	: NA	
(61) Patent of Addition to Application Number	:NA	
Filing Date	:NA	
(62) Divisional to Application Number	:NA	
Filing Date	:NA	

(57) Abstract :
The present invention provides a novel and an industrially advantageous process for the preparation of pure metaraminol or salts thereof. In particular, the present invention provides an industrially advantageous process for the preparation of enantiomerically pure metaraminol bitartrate of formula I

No. of Pages : 29 No. of Claims : 10

(12) PATENT APPLICATION PUBLICATION
(19) INDIA
(22) Date of filing of Application :31/08/2019

(21) Application No.201911035221 A
(43) Publication Date : 05/03/2021

(54) Title of the invention : UNIFIED SYSTEM FOR CORE PIN COOLING AND MOLD VACUUMING IN DIE CASTING

(51) International classification	:H04N0021430000, F16J0015447000, B22C0009060000, H02K0009000000, H01L0025160000	(71)**Name of Applicant :** **1)Rahat A Bhatia** Address of Applicant :30/2, Wearwell Complex, Industrial Area, N.I.T., Faridabad 121001, Haryana Haryana India (72)**Name of Inventor :** **1)Rahat A Bhatia**
(31) Priority Document No	:NA	
(32) Priority Date	:NA	
(33) Name of priority country	:NA	
(86) International Application No	:NA	
Filing Date	:NA	
(87) International Publication No	: NA	
(61) Patent of Addition to Application Number	:NA	
Filing Date	:NA	
(62) Divisional to Application Number	:NA	
Filing Date	:NA	

(57) Abstract :
The present invention pertains to a unified system which can be integrated in any die casting process for providing both the core pin cooling and mold vacuuming functionality. The present invention overcomes the difficulties/ challenges of developing a unified system by providing fitting arrangement for attaching other tanks of different size to the system by incorporating necessary fitting arrangement; reducing size of the system by utilizing only one manifold for three function, i.e. vacuuming for vacuum unit, air purge for vacuum unit and air purge for High Velocity Cooling Unit (HVCU) and by providing proper interlock in programming to prevent interference between cooling and vacuuming functions.

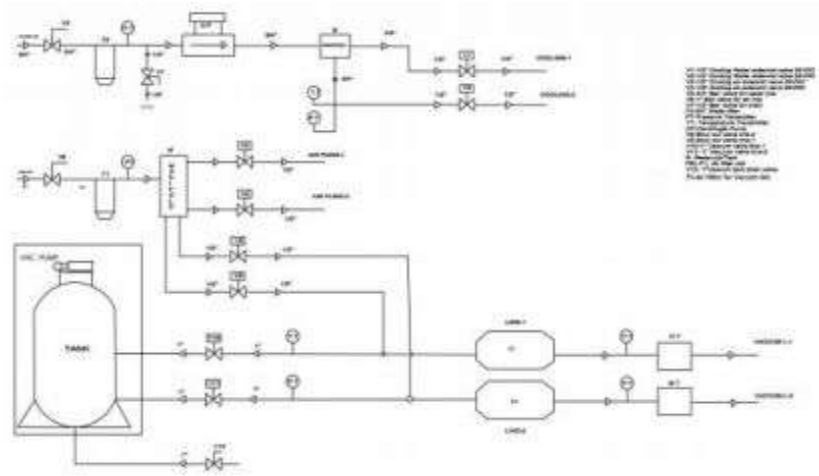

No. of Pages : 22 No. of Claims : 5

(12) PATENT APPLICATION PUBLICATION
(19) INDIA
(22) Date of filing of Application :02/09/2019

(21) Application No.201911035329 A
(43) Publication Date : 05/03/2021

(54) Title of the invention : DEVICE FOR HEATING LIQUID USING EXHAUST GASES

(51) International classification	:F28D0009000000, F28D0021000000, B60H0001180000, F28D0007160000, F02M0031160000	(71)**Name of Applicant :** **1)Chandigarh Group of Colleges** Address of Applicant :Landran Kharar Banur Highway, Sector 112, Sahibzada Ajit Singh Nagar, Mohali, Punjab-140307, India. Punjab India
(31) Priority Document No	:NA	(72)**Name of Inventor :**
(32) Priority Date	:NA	**1)Anmol Singh Brar**
(33) Name of priority country	:NA	**2)Rakesh Kumar**
(86) International Application No	:NA	**3)Santosh Kumar**
Filing Date	:NA	
(87) International Publication No	: NA	
(61) Patent of Addition to Application Number	:NA	
Filing Date	:NA	
(62) Divisional to Application Number	:NA	
Filing Date	:NA	

(57) Abstract :
The present invention relates to a device that heats cold liquid by absorbing heat from heat exchanger, comprising an outer chamber 5 connected to exhaust pipe 13 of a vehicle through a control valve 12, at least two pipes 4, 7 for entering/leaving of hot exhaust gases through outer chamber 5. An inner chamber 2 attached inside outer chamber 5 for storing cold liquid from top opening 1, inner chamber 2 consists multiple heat conducting fins 3 for exchanging heat from hot exhaust gases to cold liquid stored inside inner chamber 2. An outlet pipe 9 connected to inner chamber 2 for extracting heated water from the inner chamber 2 by means of gravity feed or pump 8 for drinking and commercial purpose.

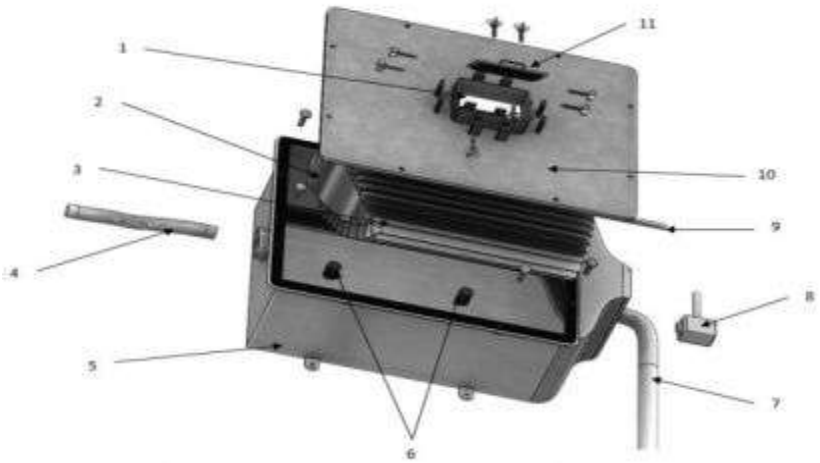

No. of Pages : 14 No. of Claims : 7

(12) PATENT APPLICATION PUBLICATION
(19) INDIA
(22) Date of filing of Application :02/09/2019

(21) Application No.201911035330 A
(43) Publication Date : 05/03/2021

(54) Title of the invention : SYSTEM AND METHOD FOR SPEECH RECOGNITION

(51) International classification	:G10L0015220000, G10L0015020000, G10L0015260000, H04M0001270000, G06F0021550000	(71)**Name of Applicant :** **1)Chandigarh Group of Colleges** Address of Applicant :Landran Kharar Banur Highway, Sector 112, Sahibzada Ajit Singh Nagar, Mohali, Punjab-140307, India. Punjab India
(31) Priority Document No	:NA	(72)**Name of Inventor :**
(32) Priority Date	:NA	**1)Dr. Manish Mahajan**
(33) Name of priority country	:NA	**2)Dr. Yogesh Kumar**
(86) International Application No	:NA	
Filing Date	:NA	
(87) International Publication No	: NA	
(61) Patent of Addition to Application Number	:NA	
Filing Date	:NA	
(62) Divisional to Application Number	:NA	
Filing Date	:NA	

(57) Abstract :
The present invention relates to a system and method for speech recognition, wherein the system comprising a microphone for capturing the speech in number of languages, a feature extracting module to filter the speech by removing unwanted sound from the speech, an acoustic speech module for converting the speech into words, a language module for arranging the words to make a sentence, a training module for analyzing the sentence and generating result in a language required by the user, a graphical user interface to display the result. The method for aforementioned system comprises the steps of, speech capture through the microphone, unwanted sound remove from the speech by the feature extracting module, the speech converted to words by the acoustic module, the words arranged to make the sentence by the language module, result generated by the training module upon analyzing the sequence, the result displayed on the graphical user interface.

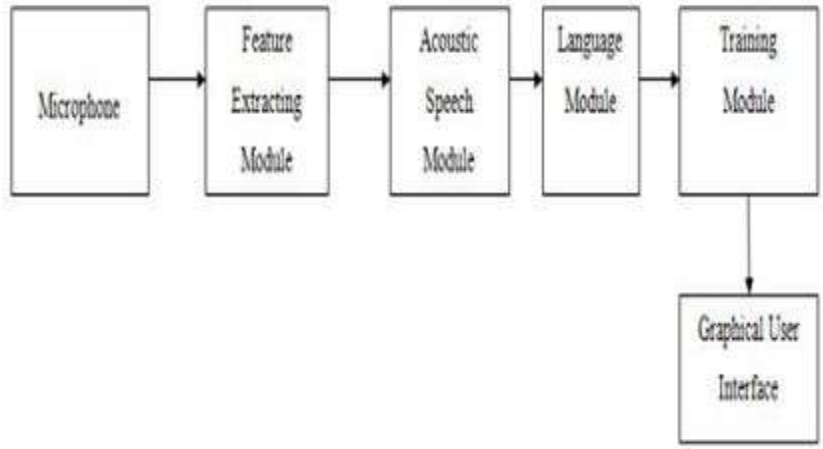

No. of Pages : 12 No. of Claims : 5

(12) PATENT APPLICATION PUBLICATION
(21) Application No.201911035331 A
(19) INDIA
(22) Date of filing of Application :02/09/2019
(43) Publication Date : 05/03/2021

(54) Title of the invention : OVERFLOW PREVENTION SYSTEM FOR STOVES

(51) International classification	:F24C0015100000, H02J0007040000, G01K0001140000, F25C0001040000, A47J0036320000	(71)**Name of Applicant :** **1)Chandigarh Group of Colleges** Address of Applicant :Landran Kharar Banur Highway, Sector 112, Sahibzada Ajit Singh Nagar, Mohali, Punjab-140307, India. Punjab India
(31) Priority Document No	:NA	(72)**Name of Inventor :**
(32) Priority Date	:NA	**1)Charvi Goyal**
(33) Name of priority country	:NA	**2)Naman Goyal**
(86) International Application No	:NA	
Filing Date	:NA	
(87) International Publication No	: NA	
(61) Patent of Addition to Application Number	:NA	
Filing Date	:NA	
(62) Divisional to Application Number	:NA	
Filing Date	:NA	

(57) Abstract :
The present invention relates to an overflow prevention system, comprising a stove 1 attached to the system, wherein plurality of burner 2 is embedded inside the stove 1 for cooking of food, at least one authentication unit attached to the stove 1 for authenticating a user, a voice communicating module 7 for receiving and transmitting voice command, a controller module 9 for controlling the stove 1 wirelessly, a covering unit mounted on cooking vessel for preventing food from spillage, wherein the covering unit is coupled with a temperature sensor and humidity sensor for sensing the temperature and humidity of food and sends the information to alerting module 8 for alerting the user during the spillage.

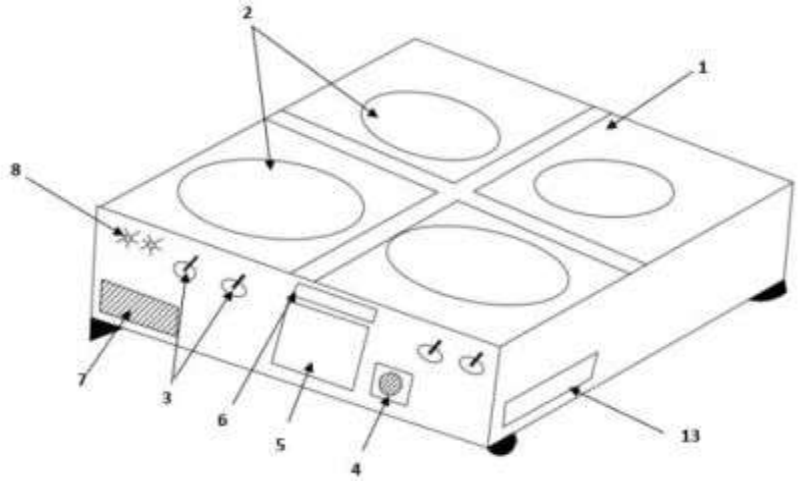

No. of Pages : 12 No. of Claims : 9

(12) PATENT APPLICATION PUBLICATION
(21) Application No.201911035333 A
(19) INDIA
(22) Date of filing of Application :02/09/2019
(43) Publication Date : 05/03/2021

(54) Title of the invention : VEHICLE SAFETY DEVICE FOR WIND POWER GENERATION

(51) International classification	:F03G0007080000, F03D0009250000, F03D0013200000, A63B0021005000, H02K0007180000	(71)**Name of Applicant :** **1)Chandigarh Group of Colleges** Address of Applicant :Landran Kharar Banur Highway, Sector 112, Sahibzada Ajit Singh Nagar, Mohali, Punjab-140307, India. Punjab India
(31) Priority Document No	:NA	(72)**Name of Inventor :**
(32) Priority Date	:NA	**1)Kartik Chawla**
(33) Name of priority country	:NA	**2)Dr.Gagandeep**
(86) International Application No	:NA	
Filing Date	:NA	
(87) International Publication No	: NA	
(61) Patent of Addition to Application Number	:NA	
Filing Date	:NA	
(62) Divisional to Application Number	:NA	
Filing Date	:NA	

(57) Abstract :
The present invention relates to a device for road safety and power generation, wherein the device comprises of plurality of propellers 1 which are connected with a shaft 2 for harnessing wind power generated by moving vehicles, a generator 4 connected with shaft 2 via helical spring 3 for converting rotation energy into electrical energy and a battery 5 is electrically connected with generator to store generated electrical energy, a helical spring 3 interconnected between shaft 2 and generator 4 for reducing impact of accident when a vehicle get out of control and collide with the device.

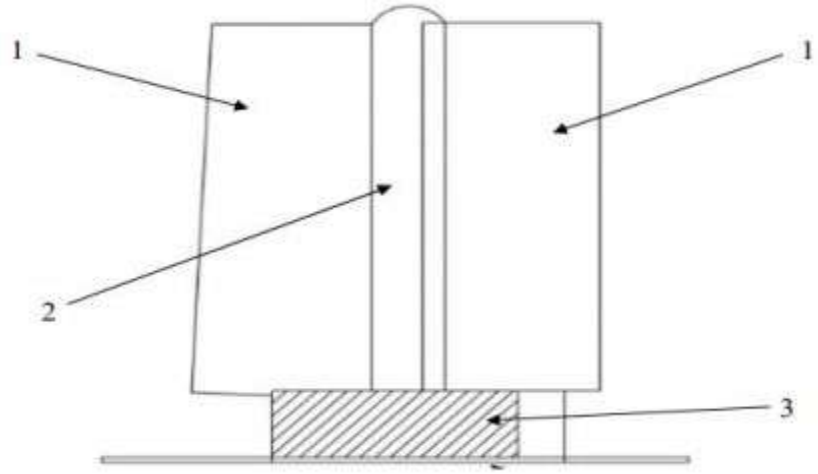

No. of Pages : 12 No. of Claims : 6

(12) PATENT APPLICATION PUBLICATION
(21) Application No.201911035369 A
(19) INDIA
(22) Date of filing of Application :03/09/2019
(43) Publication Date : 05/03/2021

(54) Title of the invention : A HEAT MANAGEMENT SYSTEM FOR LED DEVICES

(51) International classification	:H05K0001020000, H05K0007200000, H01L0033640000, F21V0029700000, H05K0003300000	(71)**Name of Applicant :** **1)HAVELLS INDIA LIMITED** Address of Applicant :904, 9th Floor, Surya Kiran Building, KG Marg, Connaught Place, New Delhi-110001, Delhi, India Delhi India
(31) Priority Document No	:NA	(72)**Name of Inventor :**
(32) Priority Date	:NA	**1)NAVDEEP KUMAR**
(33) Name of priority country	:NA	**2)SRISHESH SAHOO**
(86) International Application No	:NA	**3)AMIT KUMAR**
Filing Date	:NA	
(87) International Publication No	: NA	
(61) Patent of Addition to Application Number	:NA	
Filing Date	:NA	
(62) Divisional to Application Number	:NA	
Filing Date	:NA	

(57) Abstract :
This invention describes a heat management system (100) for LED devices, the system (100) comprises of a LED device (101) connected to a Printed Circuit Board (PCB) (102). The PCB (102) mechanically supports and electrically connects components of LED device. The system (100) further comprises of a plate (104) fastened to the PCB (102) that extracts and stores heat generated by LED device (101) at PCB (102) and a heat dissipiation structure (105) monolithically joined to the plate (104). The plate (104) extracts heat from PCB (102) in conduction mode 10 and the open celled structure (105) dissipates the stored heat to atmosphere in convection mode. The heat dissipation structure is an open celled structure.

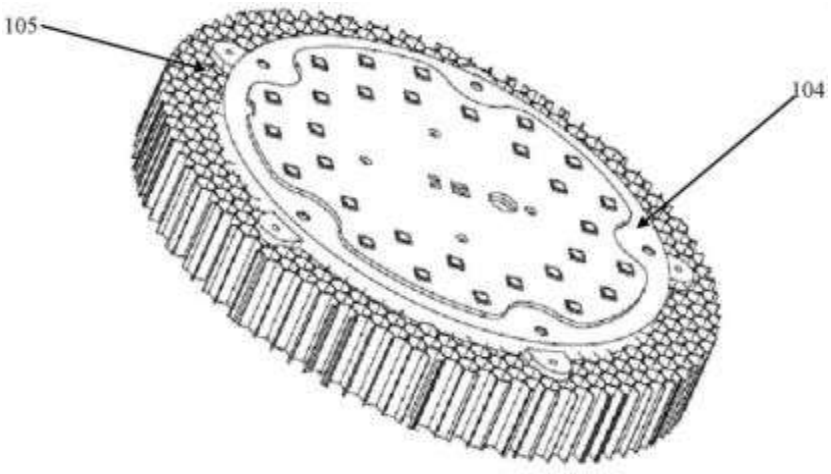

No. of Pages : 21 No. of Claims : 9

(12) PATENT APPLICATION PUBLICATION
(21) Application No.201911035404 A
(19) INDIA
(22) Date of filing of Application :03/09/2019
(43) Publication Date : 05/03/2021

(54) Title of the invention : A BRAKE LEVER FOR CONNECTING A BRAKE CABLE HAVING A STOPPER TO A DRUM BRAKE

(51) International classification	:B60T0007100000, G02F0001133500, F16D0065220000, B60T0011040000, H01L0021762000
(31) Priority Document No	:NA
(32) Priority Date	:NA
(33) Name of priority country	:NA
(86) International Application No	:NA
Filing Date	:NA
(87) International Publication No	: NA
(61) Patent of Addition to Application Number	:NA
Filing Date	:NA
(62) Divisional to Application Number	:NA
Filing Date	:NA

(71)**Name of Applicant :**
1)MARUTI SUZUKI INDIA LIMITED
Address of Applicant :1 NELSON MANDELA ROAD, VASANT KUNJ, NEW DELHI-110070, INDIA. Delhi India
(72)**Name of Inventor :**
1)MAYANK DANDOTIYA
2)P GOBALAKRISHNAN
3)RAJESH VYAS

(57) Abstract :
The present disclosure relates to a brake lever for connecting a brake cable having a stopper to a drum brake. The brake lever comprises of an inverted U shaped structure at a bottom end. The bottom end of the inverted U shaped structure further comprises of an insertion groove for inserting the brake cable and a stopper resting surface for the stopper of the brake cable. Further, the bottom end has inward tapered edges at back portion for guiding the stopper towards the stopper resting surface.

No. of Pages : 18 No. of Claims : 5

(12) PATENT APPLICATION PUBLICATION
(19) INDIA
(22) Date of filing of Application :03/09/2019

(21) Application No.201911035449 A
(43) Publication Date : 05/03/2021

(54) Title of the invention : AIR CLEANER OUTLET HOSE

(51) International classification	:F02M0035100000, F02D0009100000, B01F0007020000, F02M0035160000, F16J0015020000
(31) Priority Document No	:NA
(32) Priority Date	:NA
(33) Name of priority country	:NA
(86) International Application No	:NA
Filing Date	:NA
(87) International Publication No	: NA
(61) Patent of Addition to Application Number	:NA
Filing Date	:NA
(62) Divisional to Application Number	:NA
Filing Date	:NA

(71)**Name of Applicant :**
1)MARUTI SUZUKI INDIA LIMITED
Address of Applicant :1 Nelson Mandela Road, Vasant Kunj, New Delhi-110070, India. Delhi India
(72)**Name of Inventor :**
1)DHANASEKARAN A
2)HARI SHANKER SINGH
3)DEVANANDA B PAI
4)YUKI KITAGAWA

(57) Abstract :
An air cleaner outlet hose (100) is provided that prevents oil leakage. The air cleaner outlet hose (100) comprises an integrated sealing at an inner wall of the connecting portion (LI). The integrated sealing comprising a fitting region (L2) where the air cleaner outlet hose (100) and the throttle body (300) are press-fitted. The integrated sealing comprises a plurality of angular projections (102) in an upward direction, each comprising a horizontal surface and a tilted surface. The tilted surface (2) extends underneath the horizontal surface at an acute angle. The plurality of angular projections (102) lies side by side in a vertical direction on the inner wall of the connecting portion (LI).

No. of Pages : 17 No. of Claims : 5

(12) PATENT APPLICATION PUBLICATION
(21) Application No.201911035451 A
(19) INDIA
(22) Date of filing of Application :03/09/2019
(43) Publication Date : 05/03/2021

(54) Title of the invention : ENGINE MOUNTING TORQUE-ROD INSULATOR

(51) International classification	:B60K0005120000, F02M0051060000, F16J0015080000, H02K0005160000, G02F0001010000	(71)**Name of Applicant :** **1)MARUTI SUZUKI INDIA LIMITED** Address of Applicant :1, NELSON MANDELA ROAD, VASANT KUNJ, NEW DELHI - 110070, INDIA Delhi India
(31) Priority Document No	:NA	(72)**Name of Inventor :**
(32) Priority Date	:NA	**1)PRADYUMNA SARIPALLI**
(33) Name of priority country	:NA	**2)CHIRANJIT GHOSH**
(86) International Application No	:NA	**3)NAFEES ABDUL KHAN**
Filing Date	:NA	**4)ADITYA KUMAR NANDA**
(87) International Publication No	: NA	**5)RAHUL DEY**
(61) Patent of Addition to Application Number	:NA	**6)R MUGUNDARAM**
Filing Date	:NA	
(62) Divisional to Application Number	:NA	
Filing Date	:NA	

(57) Abstract :
Described herein is an engine mounting torque-rod insulator (210). The engine mounting torque-rod insulator (210) includes a ridge shaped slot (220) formed at a stopper portion (218) facing an outer circumferential member (208) of the engine mounting torque-rod insulator (210).

No. of Pages : 17 No. of Claims : 7

(12) PATENT APPLICATION PUBLICATION
(21) Application No.201911035454 A
(19) INDIA
(22) Date of filing of Application :03/09/2019
(43) Publication Date : 05/03/2021

(54) Title of the invention : A POWER CONVERTER IN A SINGLE PHASE GRID-INTEGRATED POWER GENERATOR

(51) International classification	:H02J0003380000, H02M0001000000, H02J0003180000, H02J0003320000, H02J0003000000
(31) Priority Document No	:NA
(32) Priority Date	:NA
(33) Name of priority country	:NA
(86) International Application No	:NA
Filing Date	:NA
(87) International Publication No	: NA
(61) Patent of Addition to Application Number	:NA
Filing Date	:NA
(62) Divisional to Application Number	:NA
Filing Date	:NA

(71)**Name of Applicant :**
1)Indian Institute of Technology Delhi
Address of Applicant :Indian Institute of Technology Delhi, Hauz Khas, New Delhi- 110016, India Delhi India
(72)**Name of Inventor :**
1)SINGH, Bhim
2)PANIGRAHI, Bijaya Ketan
3)KUMAR, Nishant

(57) Abstract :
The present disclosure relates to a power converter in a single phase grid-integrated power generator, the converter comprising: a DC supply corresponding to generated power, a DC-Link capacitor, a voltage source-converter (VSC) connected across the DC-link capacitor for converting the DC voltage supply into an AC-voltage, a load provided at the point of common coupling (PCC) defined by a connection of the load, a point of common-coupling (PCC) defining a connection between the grid, the output of the VSC and a grid, a first current sensing arrangement between load and PCC for sensing a single phase load-current, a second current sensing arrangement between grid and PCC for sensing grid-current and a control unit for controlling the operation of VSC at least based on the sensed load current and grid current.

No. of Pages : 23 No. of Claims : 10

(12) PATENT APPLICATION PUBLICATION
(21) Application No.201911035464 A
(19) INDIA
(22) Date of filing of Application :03/09/2019
(43) Publication Date : 05/03/2021

(54) Title of the invention : FORMULATION COMPRISING METALLOCATANIONIC VESICLES ENCAPSULATING PHOTOSENSITIZER DYE

(51) International classification	:A61K0041000000, A61N0005060000, A61K0009127000, A61K0049000000, A61K0009500000
(31) Priority Document No	:NA
(32) Priority Date	:NA
(33) Name of priority country	:NA
(86) International Application No	:NA
Filing Date	:NA
(87) International Publication No	: NA
(61) Patent of Addition to Application Number	:NA
Filing Date	:NA
(62) Divisional to Application Number	:NA
Filing Date	:NA

(71)**Name of Applicant :**
1)PANJAB UNIVERSITY
Address of Applicant :Sector 14, Chandigarh-160014, Panjab India Punjab India
(72)**Name of Inventor :**
1)KAUR, Gurpreet
2)GARG, Preeti
3)SHARMA, Bunty
4)BERWAL, Kanika
5)CHAUDHARY, Ganga Ram

(57) Abstract :
The present disclosure relates to a formulation comprising metallocatanionic vesicles encapsulating photosensitizer dye. The metallocatanionic vesicles are prepared from metallocationic surfactants and anionic surfactants encapsulating photosensitizer dye. The formulation of the present disclosure is effective for the utilization in the photodynamic therapy against Gram-positive and Gram-negative bacteria.

No. of Pages : 70 No. of Claims : 8

(12) PATENT APPLICATION PUBLICATION
(21) Application No.201911035494 A
(19) INDIA
(22) Date of filing of Application :04/09/2019
(43) Publication Date : 05/03/2021

(54) Title of the invention : ARTIFICIAL DRONE

(51) International classification	:G06K0009000000, B64C0039020000, H04N0005232000, G07B0015000000, G05D0001000000
(31) Priority Document No	:NA
(32) Priority Date	:NA
(33) Name of priority country	:NA
(86) International Application No	:NA
Filing Date	:NA
(87) International Publication No	: NA
(61) Patent of Addition to Application Number	:NA
Filing Date	:NA
(62) Divisional to Application Number	:NA
Filing Date	:NA

(71)**Name of Applicant :**
1)GALGOTIA COLLEGE OF ENGINEERING AND TECHNOLOGY
Address of Applicant :No1, KNOWLEDGE PARK, PHASE II, GREATER NOIDA Uttar Pradesh India
(72)**Name of Inventor :**
1)SHIVANG KUMAR AGRAHARI

(57) Abstract :
Artificial Drone Present invention provides an artificial intelligent drone which is one of its kinds which uses different sensors to detect human beings. This provides an artificially intelligent drone along with face recognition and also uses various cameras that help to locate a particular target in a specified area. The drone will be able to lift up to 5 to 6kg of food and medical supplies. The drone sends the data to its control station with help of satellite or radio communication. It is also installed with intelligent cameras to detect a particular human face and also able to detect any unplanned or unwanted activity in a particular or designated area. Following invention is described in detail with the help of Figure 1 of sheet 1 showing the top view and Figure 2 of sheet 2 showing the bottom view of drone.

No. of Pages : 15 No. of Claims : 4

(12) PATENT APPLICATION PUBLICATION
(21) Application No.201911035498 A
(19) INDIA
(22) Date of filing of Application :04/09/2019
(43) Publication Date : 05/03/2021

(54) Title of the invention : BRAIN WAVE CONTROLLED ELECTRIC SKATEBOARD

(51) International classification	:A63C0017010000, A61B0005047600, A63C0017120000, A61B0005047800, A63C0017000000	(71)**Name of Applicant :** **1)GALGOTIA COLLEGE OF ENGINEERING AND TECHNOLOGY** Address of Applicant :No.1 KNOWLEDGE PARK, PHASE II, GREATER NOIDA, UTTAR PRADESH Uttar Pradesh India
(31) Priority Document No	:NA	(72)**Name of Inventor :**
(32) Priority Date	:NA	**1)ANUBHAV KUMAR SINGH**
(33) Name of priority country	:NA	**2)Dr.DHARMASA**
(86) International Application No	:NA	**3)A.AMBIKAPATHY**
Filing Date	:NA	**4)V.K.DWIVEDHI**
(87) International Publication No	: NA	**5)Dr.PRAVEEN KUMAR MADURI**
(61) Patent of Addition to Application Number	:NA	
Filing Date	:NA	
(62) Divisional to Application Number	:NA	
Filing Date	:NA	

(57) Abstract :
Present invention a brain wave detection system for controlling electric skateboard. The proposed system eliminates the distraction caused accident as the electrode planted in the helmet detect the focus and attention of the user and control the speed of the vehicle, if the person is distracted from the road, the vehicle automatically slow down the speed. The proposed system is consisting of electric skateboard as a vehicle and a brain wave detecting helmet. The both setups are interconnected through RF. The attention and focus required to trial any vehicle on the road is detected through the electrodes which are implanted in the helmet. The signal is amplified through the buffer and a differential amplifier and sends through a transmitter to the skate board to control the speed of the motors. Following invention is described in detail with the help of Figure 1 of sheet 1 showing the block diagram for skateboard and Figure 2 of sheet 2 showing block diagram for the helmet.

No. of Pages : 23 No. of Claims : 9

(12) PATENT APPLICATION PUBLICATION
(19) INDIA
(22) Date of filing of Application :04/09/2019
(21) Application No.201911035500 A
(43) Publication Date : 05/03/2021

(54) Title of the invention : SOLID PURIFICATION APPARATUS

(51) International classification	:B01F0005100000, B01J0019180000, G06F0003048900, B67D0001000000, B01F0015060000	(71)**Name of Applicant :** **1)Swami Vivekanand Subharti University** Address of Applicant :Subhartipuram, NH-58, Delhi-Haridwar, Meerut Bypass Road Meerut Uttar Pradesh India Uttar Pradesh India
(31) Priority Document No	:NA	(72)**Name of Inventor :**
(32) Priority Date	:NA	**1)Dr. Ganesh Prasad Mishra**
(33) Name of priority country	:NA	
(86) International Application No	:NA	
Filing Date	:NA	
(87) International Publication No	: NA	
(61) Patent of Addition to Application Number	:NA	
Filing Date	:NA	
(62) Divisional to Application Number	:NA	
Filing Date	:NA	

(57) Abstract :
The present invention relates to a solid purification apparatus, comprising; a casing 1, consisting; a beaker 3 placed inside the casing that mixes out the added amount of the solid and a solvent, a thermomagnetic stirrer 4 present inside the casing that employs rotating magnetic field to mix the added substances, a temperature controller installed in the apparatus that sets the temperature of the beaker to certain value by moving up and down of arrow keys, when the arrow key is moved in downward direction then the solution is cooled in order to obtain pure solid, an adsorbent 2 attached at a second portion of the casing that traps the evaporated solvent inside the casing, and a power switch 5 attached with the casing that supplies the required amount of power for the operation of the stirrer and the controller.

No. of Pages : 12 No. of Claims : 6

(12) PATENT APPLICATION PUBLICATION
(21) Application No.201911035572 A
(19) INDIA
(22) Date of filing of Application :04/09/2019
(43) Publication Date : 05/03/2021

(54) Title of the invention : SINGLE STAGE HIGH POWER FACTOR LED DRIVER WITH VOLTAGE LIMIT

(51) International classification	:H05B0033080000, H02M0001420000, H02M0001000000, G01R0031260000, H02M0003060000	(71)**Name of Applicant :** **1)HAVELLS INDIA LIMITED** Address of Applicant :904, 9th Floor, Surya Kiran Building, KG Marg, Connaught Place, New Delhi-110001, Delhi, India Delhi India
(31) Priority Document No	:NA	(72)**Name of Inventor :**
(32) Priority Date	:NA	**1)GAURAV KUMAR SINHA**
(33) Name of priority country	:NA	**2)ASHISH KUMAR**
(86) International Application No	:NA	
Filing Date	:NA	
(87) International Publication No	: NA	
(61) Patent of Addition to Application Number	:NA	
Filing Date	:NA	
(62) Divisional to Application Number	:NA	
Filing Date	:NA	

(57) Abstract :
The present subject matter relates a single stage high power factor LED driver (200) offering constant current to the LED bank (204) with voltage limit function. The single stage high power factor LED driver (200) comprises a rectifier (201) connected to an AC input and giving a rectified DC output, an inductor (LI) having its input terminal coupled to the DC output from the rectifier (201), an integrated circuit (202) configured to control a switch, an enhancement Metal Oxide Semiconductor Field Effect Transistor (MOSFET) (203) configured to perform switching operation, a diode (Dl) having its first terminal coupled to the output terminal of the inductor (LI), a capacitor (C2) coupled to the output terminal of the diode (Dl) to hold output DC voltage given to the LED bank (204), and a hybrid feedback circuit connected parallel to the capacitor (C2), wherein the hybrid feedback circuit gives a hybrid feedback signal to the feedback terminal (FB) of the integrated circuit (202).

No. of Pages : 22 No. of Claims : 10

(12) PATENT APPLICATION PUBLICATION
(21) Application No.201911035597 A
(19) INDIA
(22) Date of filing of Application :04/09/2019
(43) Publication Date : 05/03/2021

(54) Title of the invention : WIRELESS POWER TRANSMISSION APPARATUS WITH MULTIPLE CONTROLLERS AND ADJACENT COIL MUTING

(51) International classification	:H02J0007020000, H02J0007000000, H02J0050800000, H02J0050120000, H02J0050400000	
(31) Priority Document No	:NA	
(32) Priority Date	:NA	
(33) Name of priority country	:NA	
(86) International Application No	:NA	
Filing Date	:NA	
(87) International Publication No	: NA	
(61) Patent of Addition to Application Number	:NA	
Filing Date	:NA	
(62) Divisional to Application Number	:NA	
Filing Date	:NA	

(71)**Name of Applicant :**
1)GE Hybrid Technologies, LLC
Address of Applicant :1 Research Circle Niskayuna, NY 12309 United States of America U.S.A.
(72)**Name of Inventor :**
1)Viswanathan Kanakasabai
2)Suma Memana Narayana Bhat
3)Jayanti Ganesh
4)Subbarao Tatikonda
5)Rupan Basak

(57) Abstract :
This disclosure provides systems, devices, apparatus and methods, including computer programs encoded on storage media, for a wireless power transmission apparatus that supports charging of one or more wireless power receiving apparatuses. The wireless power transmission apparatus (such as a charging pad or surface) may include multiple primary coils and multiple local controllers (such such as one local controller per primary coil). Each local controller can independently activate a primary coil to supply power to a wireless power receiving apparatus. Thus, the wireless power transmission apparatus may support concurrent charging of multiple wireless power receiving apparatuses. When a first primary coil is activated, a local controller can mute or disable the adjacent primary coils (near the first primary coil) to mitigate undesirable interference. In some implementations, the local controller may provide a status to other local controllers (associated with adjacent primary coils) to disable the adjacent primary coils.

No. of Pages : 50 No. of Claims : 23

(12) PATENT APPLICATION PUBLICATION
(21) Application No.201911035599 A
(19) INDIA
(22) Date of filing of Application :04/09/2019
(43) Publication Date : 05/03/2021

(54) Title of the invention : DURABLE ELASTIC HEAVY ELEPHANTINE CARRIER (DEHEC) SUSPENSION BRIDGE

(51) International classification	:E01D0011020000, F02B0001040000, E01D0006000000, C08L0091000000, E01D0101240000	(71)**Name of Applicant :** **1)HARDIK CHHABRA** Address of Applicant :H-8/8, MALVIYA NAGAR, NEW DELHI.-110017, INDIA Delhi India (72)**Name of Inventor :** **1)HARDIK CHHABRA**
(31) Priority Document No	:NA	
(32) Priority Date	:NA	
(33) Name of priority country	:NA	
(86) International Application No	:NA	
Filing Date	:NA	
(87) International Publication No	: NA	
(61) Patent of Addition to Application Number	:NA	
Filing Date	:NA	
(62) Divisional to Application Number	:NA	
Filing Date	:NA	

(57) Abstract :
This is a model of a suspension bridge which exhibits the unique quality of holding a tremendous amount of weight/load while being extremely light in weight. This quality makes it unique in the sense that it is very durable in spite of being light weight in nature. This durability is achieved as a result of the less dense material or waste material being utilized for the construction of the suspension bridge. In this case, using waste material also makes this project cost efficient and eco- friendly as it is not using heavy metals in its production which are extracted from earth causing exploitation of non-renewable resources. The model consists of components that are purely mathematical, and physics based. It is almost impossible to develop a model with such unique characteristics without applying such concepts. The major components of the bridge are:¢ The Pillars¢ The Truss Wires running around the bridge joining at various angles to the bridge.¢ The T-shaped supporter¢ The length distribution, which is a key factor, in such a manner to make it follow the Fibonacci series and Golden Ratio. Other Physical funda is to promote thedistribution of load (weight) that gives the bridge the strength to uphold the load. The bridge has a lot of springs used in its construction to enable to survive the natural disasters such as earthquakes. These springs also promote the elastic character of the bridge. The more elastic it is, the more durable it becomes. Wires installed in triangular shapes as triangle is one such polygon which has the ability to. overcome shear stress, quickly, this is advantageous as the quicker it is the better efficiency the bridge develops.

No. of Pages : 18 No. of Claims : 6

(12) PATENT APPLICATION PUBLICATION
(21) Application No.201911035636 A
(19) INDIA
(22) Date of filing of Application :04/09/2019
(43) Publication Date : 05/03/2021

(54) Title of the invention : SYSTEMS, METHODS AND COMPUTER PROGRAM PRODUCTSFOR SECURING OTPS

(51) International classification	:G06Q0020400000, G06Q0040020000, H04L0029060000, G06Q0020380000, G06Q0020320000	(71)**Name of Applicant :** **1)MASTERCARD INTERNATIONAL INCORPORATED** Address of Applicant :2000 PURCHASE STREET, PURCHASE, NY 10577, UNITED STATES OF AMERICA U.S.A.
(31) Priority Document No	:NA	(72)**Name of Inventor :**
(32) Priority Date	:NA	**1)MAHALLE, Rajesh, Pralhadrao**
(33) Name of priority country	:NA	**2)VIEGAS, Rukuma**
(86) International Application No	:NA	**3)WADHWA, Jitendra, Singh**
Filing Date	:NA	
(87) International Publication No	: NA	
(61) Patent of Addition to Application Number	:NA	
Filing Date	:NA	
(62) Divisional to Application Number	:NA	
Filing Date	:NA	

(57) Abstract :
The invention relates to methods, systems and computer program products for securing one time passwords (OTP) for use in OTP based authorization of electronic payment transactions. The invention involves transmission and display of an OTP at a user device in response to a prior determination that a user operating the user device is authorized to implement a payment transaction through a payment account associated with the payment transaction. The invention implements this through transmission to the user device associated with the identified payment account, a data message initiating a process for verification of identity of a user operating the user device. Responsive to determining that the user operating the user device is authorized to operate the payment account, displaying the OTP on the user device for implementation of the payment transaction.

No. of Pages : 68 No. of Claims : 19

(12) PATENT APPLICATION PUBLICATION
(21) Application No.201911035651 A
(19) INDIA
(22) Date of filing of Application :04/09/2019
(43) Publication Date : 05/03/2021

(54) Title of the invention : METHOD FOR PERFORMING CURING DURING MANUFACTURING OF AN OPTICAL FIBER RIBBON

(51) International classification	:B29D0011000000, B29C0035080000, C08J0003280000, H01L0051560000, G02B0006440000	(71)**Name of Applicant :** **1)Sterlite Technologies Limited** Address of Applicant :IFFCO Tower, 3rd Floor, Plot No.3, Sector 29 Gurgaon Haryana India 122002 Haryana India
(31) Priority Document No	:NA	(72)**Name of Inventor :** **1)Hemanth Kondapalli**
(32) Priority Date	:NA	**2)Vikash Shukla**
(33) Name of priority country	:NA	**3)Atulkumar Mishra**
(86) International Application No	:NA	**4)Kishore Chandra Sahoo**
Filing Date	:NA	
(87) International Publication No	: NA	
(61) Patent of Addition to Application Number	:NA	
Filing Date	:NA	
(62) Divisional to Application Number	:NA	
Filing Date	:NA	

(57) Abstract :
ABSTRACT METHOD FOR PERFORMING CURING DURING MANUFACTURING OF AN OPTICAL FIBRE RIBBON The present disclosure provides a method for performing curing during manufacturing of an optical fibre ribbon. The method performs a first stage of curing and a second stage of curing on a matrix material of the optical fibre ribbon. The first stage of curing is performed using a ribbon die (102) and one or more ultraviolet light emitting diode (UV LED) units (104). Further, the second stage of curing is performed using a source (202) of the one or more ultraviolet lamps (UV lamps) in an UV chamber (204). FIG. 1

No. of Pages : 18 No. of Claims : 14

(12) PATENT APPLICATION PUBLICATION
(19) INDIA
(22) Date of filing of Application :30/10/2019

(21) Application No.201914044015 A
(43) Publication Date : 05/03/2021

(54) Title of the invention : BENDING APPARATUS

(51) International classification	:B21D0007022000, B21F0001000000, B21D0007024000, B23K0037040000, B21D0007060000	(71)**Name of Applicant :** **1)JOENG UN Co.,Ltd.** Address of Applicant :80-62, Bancheonsaneop-ro, Eonyang-eup, Ulju-gun, Ulsan, Republic of Korea Republic of Korea
(31) Priority Document No	:10-2019-0108517	(72)**Name of Inventor :** **1)KIM, Ki Mo**
(32) Priority Date	:03/09/2019	
(33) Name of priority country	:Republic of Korea	
(86) International Application No	:NA	
Filing Date	:NA	
(87) International Publication No	: NA	
(61) Patent of Addition to Application Number	:NA	
Filing Date	:NA	
(62) Divisional to Application Number	:NA	
Filing Date	:NA	

(57) Abstract :
The present invention relates to a bending apparatus. The bending apparatus includes: a frame; a support having a preset area and connected to the frame; two holding units coupled to an upper surface of the support to hold a pipe, and spaced apart from each other in a widthwise direction; and two bending units coupled to the upper surface of the support to bend the pipe, and located outside the holding units with respect to the widthwise direction.

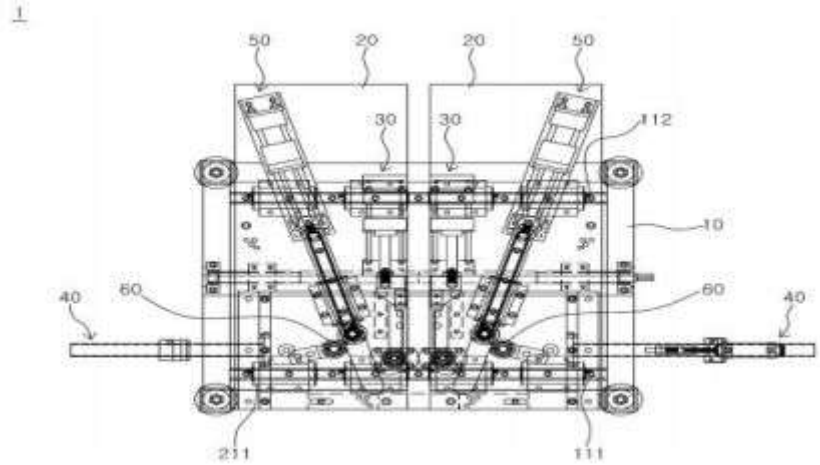

No. of Pages : 23 No. of Claims : 5

(12) PATENT APPLICATION PUBLICATION
(19) INDIA
(22) Date of filing of Application :22/11/2019
(21) Application No.201917047812 A
(43) Publication Date : 05/03/2021

(54) Title of the invention : SINGLE SIDE FASTENING SYSTEM FOR IDENTIFICATION PLACARD FOR UTILITY VAULT LIDS

(51) International classification	:B65D 1/22, B65D 43/02, B65D 55/00, B65D 88/76, E02D 29/14
(31) Priority Document No	:16/116664
(32) Priority Date	:29/08/2018
(33) Name of priority country	:U.S.A.
(86) International Application No	:PCT/US2019/048288
Filing Date	:27/08/2019
(87) International Publication No	:WO 2020/046897
(61) Patent of Addition to Application Number	:NA
Filing Date	:NA
(62) Divisional to Application Number	:NA
Filing Date	:NA

(71)**Name of Applicant :**
1)CHANNELL COMMERCIAL CORPORATION
Address of Applicant :P.O. Box 9022 Temecula, CA 92589-9022 U.S.A.
(72)**Name of Inventor :**
1)LEMACKS, Michael, A.
2)SAFRANEK, Timothy, S.
3)WATSON, Christopher, M.
4)BURKE, Edward, J.

(57) Abstract :
A fastener for attaching an identification placard having a post to a lid for a utility vault from a single side of the lid, the fastener includes a body portion for positioning within a hole in the lid, the fastener having tabs for retaining the fastener to the lid and lobes for preventing over insertion of the fastener into the hole in the lid and a bore extending through or partially through the body portion for receipt of and friction retention and/or mechanical interlocking of the post of the identification placard.

No. of Pages : 7 No. of Claims : 20

(12) PATENT APPLICATION PUBLICATION
(19) INDIA
(22) Date of filing of Application :17/03/2020
(21) Application No.202014011428 A
(43) Publication Date : 05/03/2021

(54) Title of the invention :CLUTCH PEDAL APPARATUS FOR ELECTRONIC CLUTCH€ •

(51) International classification	:G05G0005030000, B60K0023020000, G05G0001300000, F16D0023120000, G05G0001460000
(31) Priority Document No	:10-2019-0108716
(32) Priority Date	:03/09/2019
(33) Name of priority country	:Republic of Korea
(86) International Application No	:NA
Filing Date	:NA
(87) International Publication No	: NA
(61) Patent of Addition to Application Number	:NA
Filing Date	:NA
(62) Divisional to Application Number	:NA
Filing Date	:NA

(71)**Name of Applicant :**
1)HYUNDAI MOTOR COMPANY
Address of Applicant :12 Heolleung-ro, Seocho-gu, Seoul 06797, Republic of Korea Republic of Korea
2)KIA MOTORS CORPORATION
3)KYUNG CHANG INDUSTRIAL CO., LTD.
(72)**Name of Inventor :**
1)LEE, Myeong Hyeon
2)PARK, Dae Deuk
3)KIM, Eun Sik
4)HONG, Jong Ho
5)HAN, Jong Hwan
6)LEE, Ho Sik
7)PARK, Min Seong

(57) Abstract :
The present disclosure relates to a clutch pedal apparatus for an electronic clutch system, in which it is possible to easily and conveniently assemble a restoring force generator 500 to a pedal member 100 by fitting coupling holes 130 formed at the pedal member 100 and coupling protrusion 521 formed at the restoring force generator 500 to each other.

No. of Pages : 54 No. of Claims : 14

(12) PATENT APPLICATION PUBLICATION
(21) Application No.202014021559 A
(19) INDIA
(22) Date of filing of Application :22/05/2020
(43) Publication Date : 05/03/2021

(54) Title of the invention : CONNECTOR, ELECTRONIC APPARATUS, WEARABLE APPARATUS AND ASSEMBLY METHOD

(51) International classification	:H01R0013627000, H01R0013717000, H01R0013620000, H04N0005225000, H01R0043240000
(31) Priority Document No	:201910831886.7
(32) Priority Date	:04/09/2019
(33) Name of priority country	:China
(86) International Application No	:NA
Filing Date	:NA
(87) International Publication No	: NA
(61) Patent of Addition to Application Number	:NA
Filing Date	:NA
(62) Divisional to Application Number	:NA
Filing Date	:NA

(71)**Name of Applicant :**
1)GUANGDONG OPPO MOBILE TELECOMMUNICATIONS CORP., LTD.
Address of Applicant :NO. 18, HAIBIN ROAD, WUSHA, CHANG'AN, DONGGUAN, GUANGDONG 523860, CHINA China
(72)**Name of Inventor :**
1)XUE, YUEGE

(57) Abstract :
The present disclosure may provide a connector (80), an electronic apparatus (30), a wearable apparatus (10) and an assembly method. The connector (80) may include: a main body (82) and a mating member (84) connected to the main body (82). An inclined face (842) may be provided on one end of the mating member (84) away from the main body (82), and a recess (85) may be defined between the inclined face (842) and the main body (82). When the mating member (84) is inserted into the mating site and arrives at a predefined location, the engaging member (24) may be restored and accommodated in the recess (85) to engage with the connector (80). In this way, the wearable apparatus (10) could have a simple and reliable structure, and the assembly and disassembly process of the structure could be easy, labor-saving and quick.

No. of Pages : 70 No. of Claims : 15

(12) PATENT APPLICATION PUBLICATION
(19) INDIA
(22) Date of filing of Application :05/06/2020
(21) Application No.202014023730 A
(43) Publication Date : 05/03/2021

(54) Title of the invention : AUTOMATIC BRAKING APPARATUS

(51) International classification	:B60T0013680000, B60T0008175500, B60W0030090000, B60T0007220000, B60T0007120000
(31) Priority Document No	:2019-153936
(32) Priority Date	:26/08/2019
(33) Name of priority country	:Japan
(86) International Application No	:NA
Filing Date	:NA
(87) International Publication No	: NA
(61) Patent of Addition to Application Number	:NA
Filing Date	:NA
(62) Divisional to Application Number	:NA
Filing Date	:NA

(71)**Name of Applicant :**
1)Suzuki Motor Corporation
Address of Applicant :300 Takatsuka-cho, Minami-ku, Hamamatsu-shi, Shizuoka 432-8611, Japan Japan
(72)**Name of Inventor :**
1)NISHIZAWA, Hiromitsu

(57) Abstract :
An automatic braking apparatus for a vehicle includes: means (11) for detecting an obstacle on the front side in the advancing direction; an automatic braking control part (10) issuing a braking demand in the case in which collision with the obstacle is predicted; and a brake actuator (20) operating an automatic braking in accordance with the braking demand, the automatic braking apparatus further including a yaw rate detecting part (22) detecting a yaw rate of the vehicle, wherein when it is detected by the yaw rate detecting part during the operation of the automatic braking in accordance with the braking demand that the deflection of the vehicle has equaled or exceeded a threshold value, the value of the braking demand is changed to a value smaller than that in the case in which the deflection is less than the threshold value

No. of Pages : 28 No. of Claims : 5

(12) PATENT APPLICATION PUBLICATION
(21) Application No.202014025821 A
(19) INDIA
(22) Date of filing of Application :19/06/2020
(43) Publication Date : 05/03/2021

(54) Title of the invention : PROJECTION MODULE AND TERMINAL

(51) International classification	:H04W0036220000, G06F0017220000, G06F0017210000, C07D0403120000, C07D0413040000	(71)**Name of Applicant :** **1)GUANGDONG OPPO MOBILE TELECOMMUNICATIONS CORP., LTD.** Address of Applicant :No.18, Haibin Road, Wusha, Chang'an, Dongguan, Guangdong 523860, China. China
(31) Priority Document No	:201910801130.8	(72)**Name of Inventor :** **1)WANG, Lu**
(32) Priority Date	:28/08/2019	
(33) Name of priority country	:China	
(86) International Application No	:NA	
Filing Date	:NA	
(87) International Publication No	: NA	
(61) Patent of Addition to Application Number	:NA	
Filing Date	:NA	
(62) Divisional to Application Number	:NA	
Filing Date	:NA	

(57) Abstract :
The present disclosure discloses a projection module. The projection module includes a base, a housing, a first light source, a second light source and an optical element. The housing is disposed on the base, and defines an accommodating cavity together with the base. The first light 5 source is disposed on the base and arranged in the accommodating cavity. The second light source is disposed on the base and arranged in the accommodating cavity. The optical element is disposed on the housing and includes a diffraction area and a diffusion area. The first light source is aligned with the diffraction area, the second light source is aligned with the diffusion area, the diffraction area is configured to diffract light passing through the diffraction area, and the diffusion area is 10 configured to diffuse light passing through the diffusion area. The present disclosure also discloses a terminal. The first light source and the second light source are disposed on the same base. The light may be used for a purpose after passing through the diffraction area and may be used for another purpose after passing through the diffusion area, without the first light source and the second light source being encapsulated into different modules, respectively, thus improving an 15 integration level of the projection module and reducing space required for mounting the projection module in the terminal.

No. of Pages : 42 No. of Claims : 12

(12) PATENT APPLICATION PUBLICATION
(21) Application No.202014026419 A
(19) INDIA
(22) Date of filing of Application :23/06/2020
(43) Publication Date : 05/03/2021

(54) Title of the invention : SCREENSHOT CAPTURING METHOD, DEVICE, ELECTRONIC DEVICE AND COMPUTER-READABLE MEDIUM

(51) International classification	:H04W0036220000, G06F0017220000, G06F0017210000, C07D0403120000, C07D0413040000
(31) Priority Document No	:201910810348.X
(32) Priority Date	:29/08/2019
(33) Name of priority country	:China
(86) International Application No	:NA
Filing Date	:NA
(87) International Publication No	: NA
(61) Patent of Addition to Application Number	:NA
Filing Date	:NA
(62) Divisional to Application Number	:NA
Filing Date	:NA

(71)**Name of Applicant :**
1)GUANGDONG OPPO MOBILE TELECOMMUNICATIONS CORP., LTD.
Address of Applicant :No.18, Haibin Road, Wusha, Chang'an, Dongguan, Guangdong 523860, China. China
(72)**Name of Inventor :**
1)Boyu MO
2)Yue LIU

(57) Abstract :
The embodiments of the present disclosure provide a screenshot capturing method, a device, an electronic device and a computer-readable medium, and relate to a field of mobile terminals. The method includes: obtaining a duration of a pressing operation when the pressing operation acting on the touch screen is detected; determining a page to be screenshot currently displayed on the touch screen, when the duration reaching a preset duration is determined; obtaining a sliding operation acting on the touch screen, wherein the sliding operation and the pressing operation are successive operations; obtaining a positional relationship between an end point of the sliding operation and the page to be screenshot, when the sliding operation ends; determining a screenshot image according to the positional relationship and the sliding operation, and capturing the screenshot image. Therefore, the screenshot image can be determined by pressing operation and sliding operation and the screenshot operation can be realized. The screenshot operation issimple and not complicated, and the user experience can be improved.

No. of Pages : 58 No. of Claims : 15

(12) PATENT APPLICATION PUBLICATION
(21) Application No.202014027856 A
(19) INDIA
(22) Date of filing of Application :30/06/2020
(43) Publication Date : 05/03/2021

(54) Title of the invention : VEHICLE BODY LOWER STRUCTURE

(51) International classification	:C07D0403120000, H04W0036220000, C07D0403140000, C07D0417060000, C07D0413040000	(71)**Name of Applicant :** **1)SUZUKI MOTOR CORPORATION** Address of Applicant :300 Takatsuka-cho, Minami-ku, Hamamatsu-shi, Shizuoka 432-8611, Japan Japan (72)**Name of Inventor :** **1)Yudai MINESHIMA**
(31) Priority Document No	:2019-158545	
(32) Priority Date	:30/08/2019	
(33) Name of priority country	:Japan	
(86) International Application No	:NA	
Filing Date	:NA	
(87) International Publication No	: NA	
(61) Patent of Addition to Application Number	:NA	
Filing Date	:NA	
(62) Divisional to Application Number	:NA	
Filing Date	:NA	

(57) Abstract :
An upper cross member upper-side corner portion (25c) is formed by an upper cross 5 member upper-side inclined portion (25b) and an upper cross member upper-surface portion (25a), an upper cross member lower-side corner portion (25k) is formed by an upper cross member lower-side inclined portion (25g) and an upper cross member lower-surface portion (25f), an inclination angle of a lower cross member lower-side inclined portion (22e) is set smaller than the inclination angle of the upper cross member lower-side inclined portion (25g), 10 a position (P1) where a reference line (L1) connecting the upper cross member upper-side corner portion (25c) and the upper cross member lower-side corner portion (25k) crosses a lower end of an underfloor cross member (20) is disposed closer to an outer side than a connection portion (22d) between the lower cross member lower-surface portion (22c) and the lower cross member lower-side inclined portion (22e)

No. of Pages : 29 No. of Claims : 4

(12) PATENT APPLICATION PUBLICATION
(19) INDIA
(22) Date of filing of Application :01/07/2020
(21) Application No.202014028064 A
(43) Publication Date : 05/03/2021

(54) Title of the invention : POWERTRAIN SYSTEM

(51) International classification	:G01N0033533000, H05B0031000000, B01J0020286000, C02F0003280000, B63C0007260000
(31) Priority Document No	:2019-160682
(32) Priority Date	:03/09/2019
(33) Name of priority country	:Japan
(86) International Application No	:NA
Filing Date	:NA
(87) International Publication No	: NA
(61) Patent of Addition to Application Number	:NA
Filing Date	:NA
(62) Divisional to Application Number	:NA
Filing Date	:NA

(71)**Name of Applicant :**
1)TOYOTA JIDOSHA KABUSHIKI KAISHA
Address of Applicant :1, Toyota-cho, Toyota-shi, Aichi-ken, 471-8571, Japan Japan
(72)**Name of Inventor :**
1)HOTTA, Shintaro
2)KAWAI, Takashi
3)FUSHIKI, Shunsuke
4)WAKABAYASHI, Hideto
5)ITO, Hirokazu

(57) Abstract :
A powertrain system includes a port injection internal combustion engine. A first start process is a process in which fuel is enclosed in a compression stroke 5 cylinder when the engine is stopped, and based on a stored crank stop position, ignition is performed in a first cycle of the compression stroke cylinder upon engine start. A second start process is a process in which, based on the stored crank stop position, fuel injection is performed for an intake stroke cylinder while the engine is stopped, and based on the stored crank stop position, ignition is performed in the 10 first cycle of the intake stroke cylinder upon engine start. When a catalyst temperature at the time engine start is requested is equal to or higher than a first threshold, a control device starts the internal combustion engine by at least one of the first start process and the second start process. Selected Drawing: FIG. 10

No. of Pages : 68 No. of Claims : 13

(12) PATENT APPLICATION PUBLICATION
(19) INDIA
(22) Date of filing of Application :02/07/2020
(21) Application No.202014028209 A
(43) Publication Date : 05/03/2021

(54) Title of the invention : SENSOR MOUNTING STRUCTURE FOR VEHICLE

(51) International classification	:B60R0019480000, G01S0015930000, G01S0013930000, B60R0019240000, G01S0007521000
(31) Priority Document No	:2019-159581
(32) Priority Date	:02/09/2019
(33) Name of priority country	:Japan
(86) International Application No	:NA
Filing Date	:NA
(87) International Publication No	: NA
(61) Patent of Addition to Application Number	:NA
Filing Date	:NA
(62) Divisional to Application Number	:NA
Filing Date	:NA

(71)**Name of Applicant :**
1)Suzuki Motor Corporation
Address of Applicant :300 Takatsuka-cho, Minami-ku, Hamamatsu-shi, Shizuoka 432-8611, Japan Japan
(72)**Name of Inventor :**
1)TAKI, Wataru
2)TOMITA, Hiroyuki
3)YOKOTA, Jun

(57) Abstract :
In a sensor mounting structure for a vehicle, a change in distance between a sensor and a bumper can be suppressed, and an obstacle at a rear of the vehicle can be appropriately detected. The present invention relates to a sensor mounting structure for a vehicle, including a sensor that detects an obstacle located at a rear of the vehicle and is arranged at a backside of a bumper located at a rear of the vehicle, and the sensor mounting structure mounts the sensor on a vehicle body. The mounting structure further includes a bumper bracket that extends from a back panel constituting a part of the vehicle body in the rear of the vehicle, the bumper bracket includes a bumper fixing portion that fixes the bumper to the bumper bracket, and a first sensor fixing portion that fixes the sensor to the bumper bracket.

No. of Pages : 29 No. of Claims : 4

(12) PATENT APPLICATION PUBLICATION
(21) Application No.202014028437 A
(19) INDIA
(22) Date of filing of Application :03/07/2020
(43) Publication Date : 05/03/2021

(54) Title of the invention : INTERNAL COMBUSTION ENGINE CONDITION DETERMINATION APPARATUS, INTERNAL COMBUSTION ENGINE CONDITION DETERMINATION SYSTEM, DATA ANALYZING APPARATUS, AND INTERNAL COMBUSTION ENGINE CONTROL APPARATUS

(51) International classification :F02D0041000000, F02D0041140000, F02D0041020000, F02P0005150000, F02D0041120000
(31) Priority Document No :2019-157749
(32) Priority Date :30/08/2019
(33) Name of priority country :Japan
(86) International Application No :NA
Filing Date :NA
(87) International Publication No : NA
(61) Patent of Addition to Application Number:NA
Filing Date :NA
(62) Divisional to Application Number :NA
Filing Date :NA

(71)**Name of Applicant :**
1)TOYOTA JIDOSHA KABUSHIKI KAISHA
Address of Applicant :1, Toyota-cho, Toyota-shi, Aichi-ken, 471-8571, Japan Japan
(72)**Name of Inventor :**
1)Yohsuke HASHIMOTO
2)Akihiro KATAYAMA
3)Yuta OSHIRO
4)Kazuki SUGIE
5)Naoya OKA

(57) Abstract :
ABSTRACT INTERNAL COMBUSTION ENGINE CONDITION DETERMINATION APPARATUS, INTERNAL COMBUSTION ENGINE CONDITION DETERMINATION SYSTEM, DATA ANALYZING APPARATUS, AND INTERNAL COMBUSTION ENGINE CONTROL APPARATUS An internal combustion engine condition determination apparatus includes a storage device (76; 126); and an execution device. The storage device (76; 126) stores mapping data that defines a mapping. The execution device is configured to execute an acquisition process of acquiring an internal combustion engine state variable every time a crankshaft of an internal combustion engine rotates by a predetermined angle, and a determination process of determining a condition of the internal combustion engine based on an output obtained through the mapping using the internal combustion engine state variable as an input. The mapping data is trained by machine learning. The execution device is configured to prohibit the determination process when a rotation speed of the crankshaft is equal to or higher than a predetermined threshold. Selected drawing: FIG. 2

No. of Pages : 55 No. of Claims : 7

(12) PATENT APPLICATION PUBLICATION
(21) Application No.202014028722 A
(19) INDIA
(22) Date of filing of Application :06/07/2020
(43) Publication Date : 05/03/2021

(54) Title of the invention : VEHICLE LOWER STRUCTURE

(51) International classification	:C07D0403120000, H04W0036220000, C07D0403140000, C07D0417060000, C07D0413040000
(31) Priority Document No	:2019-160581
(32) Priority Date	:03/09/2019
(33) Name of priority country	:Japan
(86) International Application No	:NA
Filing Date	:NA
(87) International Publication No	: NA
(61) Patent of Addition to Application Number	:NA
Filing Date	:NA
(62) Divisional to Application Number	:NA
Filing Date	:NA

(71)**Name of Applicant :**
1)SUZUKI MOTOR CORPORATION
Address of Applicant :300 Takatsuka-cho, Minami-ku, Hamamatsu-shi, Shizuoka 432-8611, Japan Japan
(72)**Name of Inventor :**
1)Yuta AKAZAWA

(57) Abstract :
At a position which is below side members (6) and which overlaps a battery pack (4) in a vehicle front-rear direction, there is arranged a battery guard (11) extending in a front-rear direction along the side members (6), and a lower end of the battery guard (11) is situated below a lower surface of the battery pack (4) in an up-down direction.

No. of Pages : 22 No. of Claims : 8

(12) PATENT APPLICATION PUBLICATION
(21) Application No.202014029171 A
(19) INDIA
(22) Date of filing of Application :09/07/2020
(43) Publication Date : 05/03/2021

(54) Title of the invention : ANTENNA DEVICE, ELECTRONIC APPARATUS AND METHOD FOR ANTENNA SWITCHING

(51) International classification	:H04W0036220000, G06F0017220000, G06F0017210000, C07D0403120000, C07D0413040000
(31) Priority Document No	:201910819119.4
(32) Priority Date	:30/08/2019
(33) Name of priority country	:China
(86) International Application No	:NA
Filing Date	:NA
(87) International Publication No	: NA
(61) Patent of Addition to Application Number	:NA
Filing Date	:NA
(62) Divisional to Application Number	:NA
Filing Date	:NA

(71)**Name of Applicant :**
1)GUANGDONG OPPO MOBILE TELECOMMUNICATIONS CORP., LTD.
Address of Applicant :No.18, Haibin Road, Wusha, Chang'an, Dongguan, Guangdong 523860, China. 2. China
(72)**Name of Inventor :**
1)LI, Si

(57) Abstract :
An antenna device and an electronic apparatus are disclosed by embodiments of the present disclosure. The antenna device includes: a near field communication chip configured to provide a differential excitation current; a ground plane forming a conductive path thereon; a plurality of first conductor structures; a first switch configured to selectively be in communication one or more of the first conductor structures; a second conductor structure. The communicating first conductor structure, the conductive path, and the second conductor structure together constitute a conductive loop for transmission of the differential excitation current. By providing the plurality of first conductor structures in the antenna device and at different parts of the electronic apparatus, the design of the NFC antenna can be realized by the first conductor structures at different parts of the electronic apparatus in cooperation with the ground plane, and the NFC can be implemented through the conductor structures at different parts of the electronic apparatus, thereby improving the convenience of the NFC of the electronic apparatus.

No. of Pages : 60 No. of Claims : 14

(12) PATENT APPLICATION PUBLICATION
(21) Application No.202014029393 A
(19) INDIA
(22) Date of filing of Application :10/07/2020
(43) Publication Date : 05/03/2021

(54) Title of the invention : SADDLE RIDING VEHICLE

(51) International classification	:G06F0017210000, G06F0017220000, H04W0036220000, G06F0016930000, G06F0017240000
(31) Priority Document No	:2019-154425
(32) Priority Date	:27/08/2019
(33) Name of priority country	:Japan
(86) International Application No	:NA
Filing Date	:NA
(87) International Publication No	: NA
(61) Patent of Addition to Application Number	:NA
Filing Date	:NA
(62) Divisional to Application Number	:NA
Filing Date	:NA

(71)**Name of Applicant :**
1)HONDA MOTOR CO., LTD.
Address of Applicant :1-1, Minami-Aoyama 2-chome, Minato-ku, Tokyo 107-8556 Japan Japan
(72)**Name of Inventor :**
1)IMAI Yoshiyuki
2)NAKAMURA Hironori
3)KOBAYASHI Naoki

(57) Abstract :
To enable, in a saddle riding vehicle, a chain that has fallen off to be effectively received by a simple structure. [Solving Means] In a saddle riding vehicle including: a swing arm 13 that supports a rear wheel 3; a sprocket 31 disposed at the rear wheel 3; and a chain 32 that meshes with the sprocket 31 to thereby drive the rear wheel 3, the rear wheel 3 includes a rear wheel-side protruding portion 58 that protrudes from the sprocket 31 to an outside in a vehicle width direction, a chain cover fastening portion 40, to which a chain cover 33 for covering the chain 32 is fastened, is disposed on the outside in the vehicle width direction with respect to the rear wheel-side protruding portion 58 and protrudes to an inside in the vehicle width direction, and the chain cover fastening portion 40 is disposed at a position at which the chain cover fastening portion 40 overlaps the rear wheel-side protruding portion 58 in a vehicle side view.

No. of Pages : 37 No. of Claims : 8

(12) PATENT APPLICATION PUBLICATION
(21) Application No.202014029430 A
(19) INDIA
(22) Date of filing of Application :10/07/2020
(43) Publication Date : 05/03/2021

(54) Title of the invention : STATE DETERMINATION DEVICE FOR INTERNAL COMBUSTION ENGINE, STATE DETERMINATION SYSTEM FOR INTERNAL COMBUSTION ENGINE, DATA ANALYSIS DEVICE, AND CONTROL DEVICE FOR INTERNAL COMBUSTION ENGINE

(51) International classification	:F02D0041140000, B60W0010060000, F02D0041020000, F02D0041000000, G01M0015110000
(31) Priority Document No	:2019-157750
(32) Priority Date	:30/08/2019
(33) Name of priority country	:Japan
(86) International Application No	:NA
Filing Date	:NA
(87) International Publication No	: NA
(61) Patent of Addition to Application Number	:NA
Filing Date	:NA
(62) Divisional to Application Number	:NA
Filing Date	:NA

(71)**Name of Applicant :**
1)TOYOTA JIDOSHA KABUSHIKI KAISHA
Address of Applicant :1, Toyota-cho, Toyota-shi, Aichi-ken, 471-8571, Japan Japan
(72)**Name of Inventor :**
1)Yohsuke HASHIMOTO.
2)Akihiro KATAYAMA
3)Yuta OSHIRO
4)Kazuki SUGIE
5)Naoya OKA

(57) Abstract :
ABSTRACT STATE DETERMINATION DEVICE FOR INTERNAL COMBUSTION ENGINE, STATE DETERMINATION SYSTEM FOR INTERNAL COMBUSTION ENGINE, DATA ANALYSIS DEVICE, AND CONTROL DEVICE FOR INTERNAL COMBUSTION ENGINE Provided is a state determination device for an internal combustion engine (10). The state determination device includes a storage device (76, 126), and an execution device (72, 74, 122, 124). The storage device (76, 126) stores mapping data (76a, 126a) that is data defining a mapping that outputs a determination result of a state of the internal combustion engine (10), by using an internal combustion engine state variable as an input. The execution device (72, 74, 122, 124) executes an acquisition process of acquiring the internal combustion engine state variable each time a crankshaft (24) rotates by a specified angle, and a determination process of determining the state of the internal combustion engine (10) based on an output of the mapping using the internal combustion engine state variable as an input. The execution device (72, 74, 122, 124) omits a part of the determination process performed each time the crankshaft (24) rotates by the specified angle when a rotation speed of the crankshaft (24) becomes equal to or higher than a predetermined threshold. Selected drawing: FIG. 2

No. of Pages : 51 No. of Claims : 6

(12) PATENT APPLICATION PUBLICATION
(19) INDIA
(22) Date of filing of Application :20/07/2020
(21) Application No.202014030925 A
(43) Publication Date : 05/03/2021

(54) Title of the invention : ROLLABLE DISPLAY DEVICE

(51) International classification	:G06F0001160000, G09F0009300000, H04R0007040000, H05K0005030000, H05K0005020000
(31) Priority Document No	:PCT/KR2019/011282
(32) Priority Date	:03/09/2019
(33) Name of priority country	:PCT
(86) International Application No	:NA
Filing Date	:NA
(87) International Publication No	: NA
(61) Patent of Addition to Application Number	:NA
Filing Date	:NA
(62) Divisional to Application Number	:NA
Filing Date	:NA

(71)**Name of Applicant :**
1)LG ELECTRONICS INC.
Address of Applicant :128 Yeoui-daero, Yeongdeungpo-gu, Seoul 07336, Republic of Korea Republic of Korea
(72)**Name of Inventor :**
1)CHA, Taesung
2)HAN, Dongkyoon
3)KWON, Hyeongjun
4)JEONG, Kyungmin
5)PARK, Heegun

(57) Abstract :
ABSTRACT OF THE DISCLOSURE A rollable display device includes: a soft display panel; a main roller for winding or unwinding the soft display panel; an actuator coupled to the soft display panel to ascend and descend the soft display panel; a housing having the main roller mounted therein, wherein an opening extending in a first direction is defined in a top of the housing to retract and extend the soft display panel therethrough; and an elastic portion having one end coupled to a perimeter of the opening and protruding to cover at least a portion of the opening, wherein the elastic portion includes a rubber portion having a predetermined length along the first direction. The rollable display device may minimize exposure of an interior of the housing to prevent foreign substances from entering.

No. of Pages : 24 No. of Claims : 10

(12) PATENT APPLICATION PUBLICATION
(21) Application No.202014031687 A
(19) INDIA
(22) Date of filing of Application :24/07/2020
(43) Publication Date : 05/03/2021

(54) Title of the invention : VEHICLE BODY LOWER STRUCTURE

(51) International classification	:C07D0403120000, H04W0036220000, C07D0403140000, C07D0417060000, C07D0413040000
(31) Priority Document No	:2019-158544
(32) Priority Date	:30/08/2019
(33) Name of priority country	:Japan
(86) International Application No	:NA
Filing Date	:NA
(87) International Publication No	: NA
(61) Patent of Addition to Application Number	:NA
Filing Date	:NA
(62) Divisional to Application Number	:NA
Filing Date	:NA

(71)**Name of Applicant :**
1)SUZUKI MOTOR CORPORATION
Address of Applicant :300 Takatsuka-cho, Minami-ku, Hamamatsu-shi, Shizuoka 432-8611, Japan Japan
(72)**Name of Inventor :**
1)Shinei MOCHIZUKI
2)Daisuke KAWAI

(57) Abstract :
In a vehicle body lower structure, a semicircular notch (21h) is provided on a lower 5 part of an underfloor cross member (20), and a propeller shaft is disposed in the semicircular notch (21h). On a lower side of the semicircular notch (21h), a bracket (45) which supports the propeller shaft and crosses the semicircular notch (21h) is provided. On the underfloor cross member (20) located on both side parts of the semicircular notch (21h), a bracket join portion (21d) to which the bracket (45) is joined is provided, and inner-side reinforcing 10 members (32, 33) extending in a vehicle vertical direction between an upper part and a lower part of the underfloor cross member (20) are provided at a position corresponding to the bracket join portion (21h).

No. of Pages : 35 No. of Claims : 4

(12) PATENT APPLICATION PUBLICATION
(19) INDIA
(22) Date of filing of Application :24/07/2020
(21) Application No.202014031785 A
(43) Publication Date : 05/03/2021

(54) Title of the invention : ARTIFICIAL INTELLIGENCE (AI) BASED INNOVATION DATA PROCESSING SYSTEM

(51) International classification	:G06F0017270000, G06N0005020000, G06N0020000000, G06F0017280000, G06F0016242000
(31) Priority Document No	:16/555,320
(32) Priority Date	:29/08/2019
(33) Name of priority country	:U.S.A.
(86) International Application No	:NA
Filing Date	:NA
(87) International Publication No	: NA
(61) Patent of Addition to Application Number	:NA
Filing Date	:NA
(62) Divisional to Application Number	:NA
Filing Date	:NA

(71)**Name of Applicant :**
1)Accenture Global Solutions Limited
Address of Applicant :3 Grand Canal Plaza, Grand Canal Street Upper , Dublin 4, Ireland Ireland
(72)**Name of Inventor :**
1)KUMMAMURU, Krishna
2)LAHIRI, Bibudh
3)DASAPPA, Guruprasad
4)ATREYA V, Arjun
5)HALL, Alexander Frederick John Piers
6)RUYTINX, Sven
7)WITJAS, Cyrille

(57) Abstract :
ABSTRACT ARTIFICIAL INTELLIGENCE (AI) BASED INNOVATION DATA PROCESSING SYSTEM An Artificial Intelligence (AI)-based innovation data processing system receives at least one query word related to a category. Information material including textual and non-textual data is retrieved from a plurality of data sources using the at least one query word. The information material is tokenized and parsed using a dependency parser for entity recognition, building entity relationships and for generating knowledge graphs. The output of the dependency parser is accessed by a trained classifier for obtaining respective confidence levels for each of the sentences in the textual data. The confidence levels are compared to a predetermined threshold confidence level for determining if the sentences include references to innovations. In addition, trends in the innovations are determined and responses to user queries are generated based on one or more of knowledge graphs and the trends. Fig. 1

No. of Pages : 57 No. of Claims : 20

(12) PATENT APPLICATION PUBLICATION
(21) Application No.202014031796 A
(19) INDIA
(22) Date of filing of Application :24/07/2020
(43) Publication Date : 05/03/2021

(54) Title of the invention : CLOUDINESS DETECTION APPARATUS

(51) International classification	:H04N0007180000, H04N0005247000, G06T0007000000, C03B0011080000, H04N0005232000
(31) Priority Document No	:2019-161005
(32) Priority Date	:04/09/2019
(33) Name of priority country	:Japan
(86) International Application No	:NA
Filing Date	:NA
(87) International Publication No	: NA
(61) Patent of Addition to Application Number	:NA
Filing Date	:NA
(62) Divisional to Application Number	:NA
Filing Date	:NA

(71)**Name of Applicant :**
1)Suzuki Motor Corporation
Address of Applicant :300 Takatsuka-cho, Minami-ku, Hamamatsu-shi, Shizuoka 432-8611, Japan Japan
(72)**Name of Inventor :**
1)YAMAMOTO, Jotaro

(57) Abstract :
A cloudiness detection apparatus according to an aspect of the present invention includes a plurality of cameras, a cloudiness operation portion, a cloudiness feature calculation unit, and a cloudiness feature calculation unit. The plurality of cameras captures surrounding information of a vehicle from an inside of the vehicle through a glass. The cloudiness operation portion controls an occurrence of cloudiness on a part of the glass located in front of one of the plurality of cameras. The cloudiness feature calculation unit is configured to calculate a cloudiness feature quantity from images taken by each of the plurality of cameras. The cloudiness determination unit is configured to determine a cloudiness condition of each part of the glass located in front of corresponding each of the plurality of cameras according to a difference in the cloudiness feature quantity calculated by the cloudiness feature calculation unit.

No. of Pages : 41 No. of Claims : 7

(12) PATENT APPLICATION PUBLICATION
(21) Application No.202014031910 A
(19) INDIA
(22) Date of filing of Application :25/07/2020
(43) Publication Date : 05/03/2021

(54) Title of the invention : BILL PROCESSING SYSTEM AND BILL PROCESSING METHOD

(51) International classification	:G01N0033533000, H05B0031000000, B01J0020286000, C02F0003280000, B63C0007260000
(31) Priority Document No	:2019-158549
(32) Priority Date	:30/08/2019
(33) Name of priority country	:Japan
(86) International Application No	:NA
Filing Date	:NA
(87) International Publication No	: NA
(61) Patent of Addition to Application Number	:NA
Filing Date	:NA
(62) Divisional to Application Number	:NA
Filing Date	:NA

(71)**Name of Applicant :**
1)Hitachi-Omron Terminal Solutions, Corp.
Address of Applicant :6-3, Osaki 1-chome, Shinagawa-ku, Tokyo 1418576, Japan Japan
(72)**Name of Inventor :**
1)Akira NISHINO
2)Katsuyoshi FUNAI

(57) Abstract :
Provided is a bill processing system that can be handled easily and which can improve the efficiency of counting bills. With this bill processing system 1, a reception terminal 3 and a plurality of bill sorters 2 and an aggregation device 4 are communicably connected. The reception terminal 3 assigns a same ID to a plurality of bill cassettes of a same group. The plurality of bill sorters 2 receive an input of the ID assigned to each of the bill cassettes and perform count processing of bills housed in the bill cassettes. The plurality of bill sorters 2 subsequently associate a result of the count processing performed by each of the bill sorters with the ID and send the association to the aggregation device. The aggregation device 4 aggregates the results of the count processing received from the plurality of bill sorters 2 by using the ID as a key

No. of Pages : 30 No. of Claims : 6

(12) PATENT APPLICATION PUBLICATION
(21) Application No.202014032519 A
(19) INDIA
(22) Date of filing of Application :29/07/2020
(43) Publication Date : 05/03/2021

(54) Title of the invention : BILL PROCESSING SYSTEM, BILL PROCESSING RESULT SYNCHRONIZATION METHOD, AND BILL PROCESSING CONTROL PROGRAM

(51) International classification	:G01N0033533000, H05B0031000000, B01J0020286000, C02F0003280000, B63C0007260000
(31) Priority Document No	:2019-158514
(32) Priority Date	:30/08/2019
(33) Name of priority country	:Japan
(86) International Application No	:NA
Filing Date	:NA
(87) International Publication No	: NA
(61) Patent of Addition to Application Number	:NA
Filing Date	:NA
(62) Divisional to Application Number	:NA
Filing Date	:NA

(71)**Name of Applicant :**
1)Hitachi-Omron Terminal Solutions, Corp.
Address of Applicant :6-3, Osaki 1-chome, Shinagawa-ku, Tokyo 1418576, Japan Japan
(72)**Name of Inventor :**
1)Akira NISHINO
2)Katsuyoshi FUNAI

(57) Abstract :
Aggregate calculation processing of count results by a plurality of bill sorters is executed efficiently without requiring too much cost. A bill processing system 1 is configured so that a plurality of bill sorters 2 are coupled to each other in a manner capable of Peer-to-Peer communication. Each of the bill sorters 2: generates data relating to a count result of bill counting when the bill counting by its own device is finished; and transmits the generated data to another bill sorter 2 and executes synchronization processing. Furthermore, each bill sorter 2 stores the data in a storage unit 24 in its own device when receiving the data. Each bill sorter 2 executes aggregate calculation processing for performing aggregate calculation of count results of the bill counting by all the plurality of bill sorters 2 based on the data stored in the storage unit

No. of Pages : 43 No. of Claims : 10

(12) PATENT APPLICATION PUBLICATION
(19) INDIA
(22) Date of filing of Application :31/07/2020
(21) Application No.202014032898 A
(43) Publication Date : 05/03/2021

(54) Title of the invention : DUAL SPEED MANUAL STAND MIXER

(51) International classification	:A47J0043070000, A47J0043044000, A47J0043100000, B01F0007000000, B01F0007160000
(31) Priority Document No	:16/552,068
(32) Priority Date	:27/08/2019
(33) Name of priority country	:U.S.A.
(86) International Application No	:NA
Filing Date	:NA
(87) International Publication No	: NA
(61) Patent of Addition to Application Number	:NA
Filing Date	:NA
(62) Divisional to Application Number	:NA
Filing Date	:NA

(71)**Name of Applicant :**
1)Dart Industries Inc.
Address of Applicant :14901 S. Orange Blossom Trail, Orlando, Florida 32837, USA U.S.A.
(72)**Name of Inventor :**
1)Ralph F. E. Eikelenberg
2)Antoon Keymeulen
3)Dongjin Byeon

(57) Abstract :
A dual speed manual stand mixer. The mixer has a bowl with a cover fixed to the bowl. The cover includes a ring selectively mounting to the rim of the bowl, and a turntable mounted for rotation within the ring. Multiple whisks extend downward from the turntable into and within the bowl. Gearing is provided to cause both rotation of the turntable, as well as rotation of each individual whisk. A transmission is also provided to selectively connect a manual crank arm in one of two possible limit positions. The gearing ratios differ between these two position to thus drive the turntable and whisk rotation at two different speeds.

No. of Pages : 24 No. of Claims : 1

(12) PATENT APPLICATION PUBLICATION
(21) Application No.202014033032 A
(19) INDIA
(22) Date of filing of Application :31/07/2020
(43) Publication Date : 05/03/2021

(54) Title of the invention : STATOR TORQUE TRANSMISSION STRUCTURE, MOTOR DRIVE SYSTEM, STATOR TORQUE TRANSMISSION STRUCTURE ASSEMBLY/DISASSEMBLY METHOD, AND STATOR TORQUE TRANSMISSION STRUCTURE DISASSEMBLY JIG

(51) International classification	:G01N0033533000, H05B0031000000, B01J0020286000, C02F0003280000, B63C0007260000	(71)**Name of Applicant :** **1)TOSHIBA MITSUBISHI-ELECTRIC INDUSTRIAL SYSTEMS CORPORATION** Address of Applicant :3-1-1, Kyobashi, Chuo-ku, Tokyo 104-0031, Japan Japan
(31) Priority Document No	:2019-153804	(72)**Name of Inventor :**
(32) Priority Date	:26/08/2019	**1)KURITA, Satoshi**
(33) Name of priority country	:Japan	
(86) International Application No	:NA	
Filing Date	:NA	
(87) International Publication No	: NA	
(61) Patent of Addition to Application Number	:NA	
Filing Date	:NA	
(62) Divisional to Application Number	:NA	
Filing Date	:NA	

(57) Abstract :
A stator torque transmission structure (200) is provided in a motor drive system (1). The system includes: a rotating electrical machine 10 (100) having a rotor (10), a stator (20), and a stator frame (40); and a cylindrical drive part shell structure (5). The stator torque transmission structure (200) is to transmit, to the drive part shell structure (5), torque applied to 15 the stator (20) as reaction force of rotation torque for driving the rotor (10). The stator torque transmission structure (200) comprises: a circumferentially holding structure (210) circumferentially holding the stator (20) against 20 the rotation torque circumferentially applied to the stator (20); and an axially holding structure (220) axially holding the stator (20). The circumferentially holding structure (210) includes: taper pins (211); and setscrews (212) screwed for 25 equalizing pushing forces for the taper pins (211). The stator frame (40) has stator frame taper holes (41h) and the drive part shell structure (5) has 48 shell side taper holes (7a) and shell side screw holes (7b).

No. of Pages : 72 No. of Claims : 6

(12) PATENT APPLICATION PUBLICATION
(19) INDIA
(22) Date of filing of Application :01/08/2020

(21) Application No.202014033076 A
(43) Publication Date : 05/03/2021

(54) Title of the invention : COMBINED VEGETABLE AND FRUIT PEELER

(51) International classification	:A47J0017020000, A47J0017180000, B26D0003280000, A47J0017000000, B26B0003030000
(31) Priority Document No	:16/550,387
(32) Priority Date	:26/08/2019
(33) Name of priority country	:U.S.A.
(86) International Application No	:NA
Filing Date	:NA
(87) International Publication No	: NA
(61) Patent of Addition to Application Number	:NA
Filing Date	:NA
(62) Divisional to Application Number	:NA
Filing Date	:NA

(71)**Name of Applicant :**
1)Dart Industries Inc.
Address of Applicant :14901 S. Orange Blossom Trail, Orlando, Florida 32837, USA U.S.A.
(72)**Name of Inventor :**
1)Dongjin Byeon
2)Frederick M. N. De Pauw
3)Nathalie De Beer

(57) Abstract :
A combined vegetable peeler and fruit peeler includes a handle and at least one leg extending from the handle. A slotted blade is mounted to the handle for peeling vegetables. The leg includes a citrus slicer having a cutting edge for slicing the rind of fruit. The leg may further include a peeling blade in the form of a protrusion having reduced thickness, with the peeling blade having utility in peeling the rind from fruit.

No. of Pages : 15 No. of Claims : 4

(12) PATENT APPLICATION PUBLICATION
(21) Application No.202014033246 A
(19) INDIA
(22) Date of filing of Application :03/08/2020
(43) Publication Date : 05/03/2021

(54) Title of the invention : OPTICAL IMAGING LENS ASSEMBLY

(51) International classification	:G01N0033533000, H05B0031000000, B01J0020286000, C02F0003280000, B63C0007260000
(31) Priority Document No	:201910804371.8
(32) Priority Date	:28/08/2019
(33) Name of priority country	:China
(86) International Application No	:NA
Filing Date	:NA
(87) International Publication No	: NA
(61) Patent of Addition to Application Number	:NA
Filing Date	:NA
(62) Divisional to Application Number	:NA
Filing Date	:NA

(71)**Name of Applicant :**
1)ZHEJIANG SUNNY OPTICAL CO., LTD
Address of Applicant :No. 66-68 Shunyu Road, Yuyao, Ningbo City, Zhejiang Province 315400, China China
(72)**Name of Inventor :**
1)LI, Yang
2)HE, Lingbo
3)ZHAO, Liefeng
4)DAI, Fujian

(57) Abstract :
The present disclosure discloses an optical imaging lens assembly including, 5 sequentially from an object side to an image side along an optical axis, a first lens having positive refractive power with a convex object-side surface and a concave image-side surface; a second lens having negative refractive power with a concave image-side surface; a third lens having refractive power with a convex object-side surface and a concave image-side surface; a fourth lens having refractive power; a fifth lens having 10 refractive power; a sixth lens having refractive power; a seventh lens having positive refractive power with a convex object-side surface; and an eighth lens having negative refractive power with a concave object-side surface and a concave image-side surface, wherein half of a diagonal length ImgH of an effective pixel area on an imaging plane of the optical imaging lens assembly satisfies: 5.80 mm < ImgH, and an effective focal 15 length f7 of the seventh lens and a total effective focal length f of the optical imaging lens assembly satisfy: 1.00 < f7/f < 2.00.

No. of Pages : 42 No. of Claims : 22

(12) PATENT APPLICATION PUBLICATION
(21) Application No.202014033247 A
(19) INDIA
(22) Date of filing of Application :03/08/2020
(43) Publication Date : 05/03/2021

(54) Title of the invention : STATOR TORQUE TRANSMISSION STRUCTURE, MOTOR DRIVE SYSTEM, AND STATOR TORQUE TRANSMISSION STRUCTURE ASSEMBLY METHOD

(51) International classification	:G01N0033533000, H05B0031000000, B01J0020286000, C02F0003280000, B63C0007260000	(71)**Name of Applicant :** **1)TOSHIBA MITSUBISHI-ELECTRIC INDUSTRIAL SYSTEMS CORPORATION** Address of Applicant :3-1-1, Kyobashi, Chuo-ku, Tokyo 104-0031, Japan Japan
(31) Priority Document No	:2019-153805	(72)**Name of Inventor :**
(32) Priority Date	:26/08/2019	**1)KURITA, Satoshi**
(33) Name of priority country	:Japan	
(86) International Application No	:NA	
Filing Date	:NA	
(87) International Publication No	: NA	
(61) Patent of Addition to Application Number	:NA	
Filing Date	:NA	
(62) Divisional to Application Number	:NA	
Filing Date	:NA	

(57) Abstract :
A motor drive system (1) comprises a stator torque transmission structure (200) and includes: a rotating electrical machine (100) having a rotor (10), a stator (20), and a stator frame (40); and a cylindrical drive part shell structure (5). The structure (200) transmits torque applied to the stator (20) to the structure (5) and comprises: a circumferentially holding structure (210) circumferentially holding the stator (20) against the rotation torque; and an axially holding structure (220) axially holding the stator (20). The axially holding structure (220) includes: a partial arc shape first taper key (221); a second taper key (223) to be fit in the key groove (6a), facing the first taper key (221); a first bolt (222) penetrating the first bolt through holes (221a, 223a) of the first and second taper keys (221, 223) and screwed with a screw hole (41s) in the stator frame (40); and a second bolt (224) penetrating the second bolt through hole (223b) of the second taper key (223) and screwed with a screw hole (6s) in the drive part shell structure (6).

No. of Pages : 70 No. of Claims : 4

(12) PATENT APPLICATION PUBLICATION
(19) INDIA
(22) Date of filing of Application :05/08/2020
(21) Application No.202014033590 A
(43) Publication Date : 05/03/2021

(54) Title of the invention : CONTROLLING NETWORK ACCESS OF CUSTOMER-PREMISES EQUIPMENT

(51) International classification	:G01N0033533000, H05B0031000000, B01J0020286000, C02F0003280000, B63C0007260000
(31) Priority Document No	:19195357.9
(32) Priority Date	:04/09/2019
(33) Name of priority country	:EPO
(86) International Application No	:NA
Filing Date	:NA
(87) International Publication No	: NA
(61) Patent of Addition to Application Number	:NA
Filing Date	:NA
(62) Divisional to Application Number	:NA
Filing Date	:NA

(71)**Name of Applicant :**
1)KONINKLIJKE KPN N.V.
Address of Applicant :Wilhelminakade 123 3072 Rotterdam AP, Netherlands Netherlands
(72)**Name of Inventor :**
1)NEEF, Jurriaan de
2)KNAAP, Anthonius Johannes van der
3)PAPPOT, Edo
4)GRAAF, Adriaan Willem de
5)VELTHUIZEN, Henk
6)GRAS, Felix Theodorus Maria

(57) Abstract :
A system and computer-implemented method are provided for controlling network access of customer-premises equipment which may be connected via a last mile access line to a transport network. The last mile access line may terminate at a line terminal in the transport network. Said controlling may comprise searching a trusted access database for an entry containing a combination of an equipment identifier and a line identifier. If the entry is found and if the entry contains a user identifier having user credentials which are valid according to an authorization database, the network access may be granted. If the entry is not found, temporary access may be granted to a private network which may enable a user identifier and user credentials to be digitally submitted. If the user credentials are valid according to the authorization database, the network access may be subsequently granted

No. of Pages : 35 No. of Claims : 15

(12) PATENT APPLICATION PUBLICATION
(21) Application No.202014033888 A
(19) INDIA
(22) Date of filing of Application :07/08/2020
(43) Publication Date : 05/03/2021

(54) Title of the invention : SADDLE RIDING VEHICLE

(51) International classification	:C07D0403120000, G06F0017210000, G06F0017220000, G06F0016930000, H04W0036220000
(31) Priority Document No	:2019-154443
(32) Priority Date	:27/08/2019
(33) Name of priority country	:Japan
(86) International Application No	:NA
Filing Date	:NA
(87) International Publication No	: NA
(61) Patent of Addition to Application Number	:NA
Filing Date	:NA
(62) Divisional to Application Number	:NA
Filing Date	:NA

(71)**Name of Applicant :**
1)HONDA MOTOR CO., LTD.
Address of Applicant :1-1, Minami-Aoyama 2-chome, Minato-ku, Tokyo 107-8556, Japan Japan
(72)**Name of Inventor :**
1)KITAMOTO Hiroshi
2)MORIKI Yusuke
3)SHIMIZU Kenji
4)SHIBATA Yuki

(57) Abstract :
To provide a saddle riding vehicle enhanced in intake efficiency of an air cleaner. [Solving Means] A saddle riding vehicle includes: a flat floor 11; a unit swing engine 13 located on a rear side of the flat floor 11; an air cleaner 40 located on an upper side of the unit swing engine 13; and side cover 50 located on an upper side of the flat floor 11. The air cleaner 40 has an intake port 40c located above an upper end of the flat floor 11. The side cover 50 is formed with a wall section 57 protuberant to a vehicle width directionally outer side at a position corresponding to a rear end of the flat floor 11.

No. of Pages : 46 No. of Claims : 6

(12) PATENT APPLICATION PUBLICATION
(21) Application No.202014034027 A
(19) INDIA
(22) Date of filing of Application :07/08/2020
(43) Publication Date : 05/03/2021

(54) Title of the invention : STOP LINE POSITION ESTIMATION DEVICE AND VEHICLE CONTROL SYSTEM

(51) International classification	:G01N0033533000, H05B0031000000, B01J0020286000, C02F0003280000, B63C0007260000
(31) Priority Document No	:2019-154850
(32) Priority Date	:27/08/2019
(33) Name of priority country	:Japan
(86) International Application No	:NA
Filing Date	:NA
(87) International Publication No	: NA
(61) Patent of Addition to Application Number	:NA
Filing Date	:NA
(62) Divisional to Application Number	:NA
Filing Date	:NA

(71)**Name of Applicant :**
1)TOYOTA JIDOSHA KABUSHIKI KAISHA
Address of Applicant :1, Toyota-cho, Toyota-shi, Aichi-ken, 471-8571, Japan Japan
(72)**Name of Inventor :**
1)IKEZAWA, Yuta
2)TOCHIGI, Kohei
3)ITO, Shogo
4)OTAKE, Hirotada

(57) Abstract :
A stop line position estimation device (101; 201) includes a traffic signal recognition unit (11) configured to recognize a traffic signal at an intersection ahead of a vehicle (M) and a stop line position estimation unit (12; 22) configured to estimate that a position of the stop line is a position from the traffic signal by a first distance toward the vehicle (M) side. When the traffic signal recognition unit (11) recognizes a plurality of traffic signals and the stop line position estimation unit (12; 22) recognizes an immediate front traffic signal and a rear traffic signal based on a positional relationship between the traffic signals, the stop line position estimation unit (12; 22) estimates that the position of the stop line is a position from the immediate front traffic signal by a second distance toward the vehicle (M) side. The second distance is shorter than the first distance

No. of Pages : 58 No. of Claims : 7

(12) PATENT APPLICATION PUBLICATION
(19) INDIA
(22) Date of filing of Application :12/08/2020

(21) Application No.202014034616 A
(43) Publication Date : 05/03/2021

(54) Title of the invention : SADDLE RIDING VEHICLE

(51) International classification	:H04L0029080000, C07D0417140000, C07D0417060000, C07D0263320000, G03G0015000000
(31) Priority Document No	:2019-154439
(32) Priority Date	:27/08/2019
(33) Name of priority country	:Japan
(86) International Application No	:NA
Filing Date	:NA
(87) International Publication No	: NA
(61) Patent of Addition to Application Number	:NA
Filing Date	:NA
(62) Divisional to Application Number	:NA
Filing Date	:NA

(71)**Name of Applicant :**
1)HONDA MOTOR CO., LTD.
Address of Applicant :1-1, Minami-Aoyama 2-chome, Minato-ku, Tokyo 107-8556 Japan Japan
(72)**Name of Inventor :**
1)KAWANO, Sunao
2)KITAMOTO, Hiroshi
3)SAKAMOTO, Kazuhiro
4)SHIMIZU, Kenji
5)ITO, Daichi

(57) Abstract :
To provide a saddle riding vehicle that, while covering a power supply portion, allows a power supply wire to be readily withdrawn to an outside. [Solving Means] In a saddle riding vehicle that includes a vehicle body cover 47, a power supply portion 91 disposed in an opening 76 in the vehicle body cover 47, and a lid 141 that abuts on the vehicle body cover 47 to thereby cover the power supply portion 91, a routing portion 160 that routes a power supply wire 102 that extends from an outside of the lid 141 and is connected with the power supply portion 91 is formed between the lid 141 and the vehicle body cover 47.

No. of Pages : 60 No. of Claims : 10

(12) PATENT APPLICATION PUBLICATION
(21) Application No.202014034791 A
(19) INDIA
(22) Date of filing of Application :13/08/2020
(43) Publication Date : 05/03/2021

(54) Title of the invention :OPTICAL IMAGING SYSTEM€ •

(51) International classification	:G02B0013000000, G02B0009620000, G02B0009640000, H04N0005225000, G02B0027000000	(71)**Name of Applicant :** **1)Zhejiang Sunny Optical Co., Ltd** Address of Applicant :No. 66-68 Shunyu Road, Yuyao, Ningbo City, Zhejiang Province 315400, China China
(31) Priority Document No	:201910803288.9	(72)**Name of Inventor :**
(32) Priority Date	:28/08/2019	**1)LYU, Saifeng**
(33) Name of priority country	:China	**2)TANG, Mengna**
(86) International Application No	:NA	**3)DAI, Fujian**
Filing Date	:NA	**4)ZHAO, Liefeng**
(87) International Publication No	: NA	
(61) Patent of Addition to Application Number	:NA	
Filing Date	:NA	
(62) Divisional to Application Number	:NA	
Filing Date	:NA	

(57) Abstract :
ABSTRACT OPTICAL IMAGING SYSTEM The present disclosure discloses an optical imaging system including, sequentially from an object side to an image side along an optical axis, a first lens having refractive power with a convex object-side surface; a second lens having positive refractive power; a third lens having refractive power; a fourth lens having refractive power; a fifth lens having refractive power; a sixth lens having positive refractive power with a convex image-side surface; and a seventh lens having negative refractive power. An effective focal length f of the optical imaging system and a maximum field-of-view FOV of the optical imaging system satisfy ftan(FOV/2) > 4.0 mm. The effective focal length f of the optical imaging system and a radius of curvature R9 of an object-side surface of the fifth lens satisfy 0 < f/R9 < 1.0. Figure. 1

No. of Pages : 46 No. of Claims : 20

(12) PATENT APPLICATION PUBLICATION
(19) INDIA
(22) Date of filing of Application :13/08/2020
(21) Application No.202014034869 A
(43) Publication Date : 05/03/2021

(54) Title of the invention :METHOD OF MOUNTING A NACELLE OF A WIND TURBINE AND ASSEMBLING SET OF PARTS OF A WIND TURBINE€ •

(51) International classification	:H04L0029080000, C07D0417140000, C07D0417060000, C07D0263320000, G03G0015000000	(71)**Name of Applicant :** **1)GENERAL ELECTRIC COMPANY** Address of Applicant :1 River Road, Schenectady, New York 12345 USA U.S.A. (72)**Name of Inventor :** **1)Ulrich Uphues** **2)Hartmut Scholte-Wassink** **3)Sjoerd van Steinvoren**
(31) Priority Document No	:19194433.9	
(32) Priority Date	:29/08/2019	
(33) Name of priority country	:EPO	
(86) International Application No	:NA	
Filing Date	:NA	
(87) International Publication No	: NA	
(61) Patent of Addition to Application Number	:NA	
Filing Date	:NA	
(62) Divisional to Application Number	:NA	
Filing Date	:NA	

(57) Abstract :
A method of mounting a nacelle of a wind turbine and at least one component of the wind turbine on a tower of the wind turbine, the method including hooking a roof of the nacelle to a crane hook of a crane, hooking the at least one component to the crane hook of the crane, and lifting the roof of the nacelle together with the at least one component using the crane.

No. of Pages : 24 No. of Claims : 15

(12) PATENT APPLICATION PUBLICATION
(19) INDIA
(22) Date of filing of Application :17/08/2020

(21) Application No.202014035302 A
(43) Publication Date : 05/03/2021

(54) Title of the invention : ROTOR AND FUEL PUMP

(51) International classification	:H04L0029080000, C07D0417140000, C07D0417060000, C07D0263320000, G03G0015000000
(31) Priority Document No	:2019-155649
(32) Priority Date	:28/08/2019
(33) Name of priority country	:Japan
(86) International Application No	:NA
Filing Date	:NA
(87) International Publication No	: NA
(61) Patent of Addition to Application Number	:NA
Filing Date	:NA
(62) Divisional to Application Number	:NA
Filing Date	:NA

(71)**Name of Applicant :**
1)AISAN KOGYO KABUSHIKI KAISHA
Address of Applicant :1-1, Kyowa-cho 1-chome, Obu-shi, Aichi Japan 4748588 Japan
(72)**Name of Inventor :**
1)Hidetomo ISHIDA
2)Naozumi MURAKAMI

(57) Abstract :
A rotor may include: a shaft having a rotation axis; main magnets disposed around an outer periphery of the shaft; and a coating member having a center axis coincident with the rotation axis, wherein the coating member has a cylindrical shape encircling the outer periphery of the shaft, and the coating member coats the main magnets, wherein a magnetic force of the main magnets is higher than a magnetic force of the coating member, each main magnet has an outward surface facing toward an outer periphery of the cylindrical shape of the coating member, the outward surface has a forward edge and a backward edge in a rotation direction of the shaft, and a distance between the forward edge and a surface of the outer periphery of the cylindrical shape of the coating member is longer than a distance between the backward edge and the surface of the outer periphery of the cylindrical shape of the coating member.

No. of Pages : 19 No. of Claims : 7

(12) PATENT APPLICATION PUBLICATION
(21) Application No.202014035303 A
(19) INDIA
(22) Date of filing of Application :17/08/2020
(43) Publication Date : 05/03/2021

(54) Title of the invention :OPTICAL IMAGING SYSTEM€ •

(51) International classification	:G02B0013000000, G02B0009640000, G02B0027000000, G02B0009620000, G02B0013060000	(71)**Name of Applicant :** **1)Zhejiang Sunny Optical Co., Ltd** Address of Applicant :No. 66-68 Shunyu Road, Yuyao, Ningbo City, Zhejiang Province 315400, China China
(31) Priority Document No	:201910803293.X	(72)**Name of Inventor :**
(32) Priority Date	:28/08/2019	**1)LYU, Saifeng**
(33) Name of priority country	:China	**2)TANG, Mengna**
(86) International Application No	:NA	**3)DAI, Fujian**
Filing Date	:NA	**4)ZHAO, Liefeng**
(87) International Publication No	: NA	
(61) Patent of Addition to Application Number	:NA	
Filing Date	:NA	
(62) Divisional to Application Number	:NA	
Filing Date	:NA	

(57) Abstract :
ABSTRACT OPTICAL IMAGING SYSTEM The present disclosure discloses an optical imaging system including, sequentially from an object side to an image side along an optical axis, a first lens, a second lens, a third lens, a fourth lens, a fifth lens, a sixth lens and a seventh lens. The optical imaging system satisfies: f/EPD = 1.5; 0.3 < T2310/R4 < 1.8; -0.6 < f2/f4 < -0.1; and TTL/ImgH < 1.4, where f is an effective focal length of the optical imaging system, EPD is an entrance pupil diameter of the optical imaging system, T23 is a spaced interval between the second lens and the third lens along the optical axis, R4 a radius of curvature of an image-side surface of the second lens, f2 is an effective focal length of the second lens, f4 is an effective focal length of the fourth lens, TTL is a distance along the optical axis from an object-side surface of the first lens to an imaging plane of the optical imaging system, and ImgH is half of a diagonal length of an effective pixel area on the imaging plane. Figure. 1

No. of Pages : 51 No. of Claims : 20

(12) PATENT APPLICATION PUBLICATION
(19) INDIA
(22) Date of filing of Application :17/08/2020
(21) Application No.202014035335 A
(43) Publication Date : 05/03/2021

(54) Title of the invention : FUEL PUMP

(51) International classification	:C07D0403120000, G06F0017210000, G06F0017220000, G06F0016930000, H04W0036220000
(31) Priority Document No	:2019-159781
(32) Priority Date	:02/09/2019
(33) Name of priority country	:Japan
(86) International Application No	:NA
Filing Date	:NA
(87) International Publication No	: NA
(61) Patent of Addition to Application Number	:NA
Filing Date	:NA
(62) Divisional to Application Number	:NA
Filing Date	:NA

(71)**Name of Applicant :**
1)MIKUNI CORPORATION FUEL PUMP
Address of Applicant :13-11, Sotokanda 6-chome, Chiyoda-ku, Tokyo 101-0021 Japan Japan
(72)**Name of Inventor :**
1)ZHONG, LUO
2)KUSAKA, KEIJI
3)NAMIBE, KEISUKE

(57) Abstract :
The invention provides a fuel pump, in which a distal end of a connection unit that forms an ejection connection 5 port can arbitrarily be set in an orientation direction at reduced manufacturing costs, which can be shared among a plurality of vehicles with different specifications. A fuel pump 15 includes: a pump main body 17 configured to pressurize fuel and eject the fuel into a connection unit 10 holding hole 40; a connection unit 18 in which a fuel path 44 penetrates from a sealing portion 41 to a hose connecting portion 42, the sealing portion 41 being fitted into the connection unit holding hole 40, a fuel hose 22 extending from an injector 12 being connected to a hose 15 connecting portion 42, and the connection unit 18 guiding the pressurized fuel ejected into the connection unit holding hole 40 to the fuel hose 22; and a bracket 14 configured to secure the pump main body 17 to a pump securing seat 13 on a side of a vehicle body. The 20 connection unit 18 is provided with a detaching motion restricted surface 51 on one side, and the bracket 14 is provided with a detaching motion restricting surface 47 configured to abut on the detaching motion restricted surface 51 of the connection unit 18 to restrict detachment 25 from the inside of the connection unit holding hole 40.

No. of Pages : 42 No. of Claims : 5

(12) PATENT APPLICATION PUBLICATION
(19) INDIA
(22) Date of filing of Application :17/08/2020
(21) Application No.202014035370 A
(43) Publication Date : 05/03/2021

(54) Title of the invention : BASE STATION AND CONTROL METHOD THEREOF IN WIRELESS COMMUNICATION SYSTEM

(51) International classification	:C07D0403120000, H04W0036220000, C07D0403140000, C07D0417060000, C07D0413040000
(31) Priority Document No	:10-2019-0105253
(32) Priority Date	:27/08/2019
(33) Name of priority country	:Republic of Korea
(86) International Application No	:NA
Filing Date	:NA
(87) International Publication No	: NA
(61) Patent of Addition to Application Number	:NA
Filing Date	:NA
(62) Divisional to Application Number	:NA
Filing Date	:NA

(71)**Name of Applicant :**
1)SAMSUNG ELECTRONICS CO., LTD.
Address of Applicant :129, Samsung-ro, Yeongtong-gu, Suwon-si, Gyeonggi-do, 16677, Republic of Korea Republic of Korea
(72)**Name of Inventor :**
1)Jooyoung BAEK
2)Youngju HWANG

(57) Abstract :
The present disclosure relates to a communication method and system for converging a 5th-Generation (5G) communication system for supporting higher data rates beyond a 4th-Generation (4G) system with a technology for Internet of Things (IoT). The present disclosure may be applied to intelligent services based on the 5G communication technology and the IoT-related technology, such as smart home, smart building, smart city, smart car, connected car, health care, digital education, smart retail, security and safety services. An uplink resource can be ensured while a communication service with improved quality is provided even to a terminal whose channel situation is not good.

No. of Pages : 57 No. of Claims : 20

(12) PATENT APPLICATION PUBLICATION
(21) Application No.202014035738 A
(19) INDIA
(22) Date of filing of Application :19/08/2020
(43) Publication Date : 05/03/2021

(54) Title of the invention : REAL TIME SIGN LANGUAGE CONVERSION FOR COMMUNICATION IN A CONTACT CENTER

(51) International classification	:G09B0021000000, H04M0003510000, G06F0003048400, H04M0003523000, G06K0009460000
(31) Priority Document No	:16/557,488
(32) Priority Date	:30/08/2019
(33) Name of priority country	:U.S.A.
(86) International Application No	:NA
Filing Date	:NA
(87) International Publication No	: NA
(61) Patent of Addition to Application Number	:NA
Filing Date	:NA
(62) Divisional to Application Number	:NA
Filing Date	:NA

(71)**Name of Applicant :**
1)Avaya Inc.
Address of Applicant :4655 Great America Parkway, Santa Clara, CA 95054-1233, U.S.A. U.S.A.
(72)**Name of Inventor :**
1)MATULA, Valentine C.
2)DEOLE, Pushkar Yashavant
3)CHOPDEKAR, Sandesh
4)DESHMUKH, Sadashiv Vamanrao

(57) Abstract :
Interactions between agents of a contact center and customers provide the bulk of many communications and generally work well, except when the customer is deaf or mute. Customers that sign would often prefer to conduct interactions in sign language but the pool of agents having such skills is limited. By providing systems and methods to alter an image of a non-signing agent, a customer may be presented with an image of a signing agent. Additionally, systems and methods herein enable a non-signing agent to be presented with generated speech and/or text translated from the signing gestures provided by the image of the signing customer.

No. of Pages : 36 No. of Claims : 10

(12) PATENT APPLICATION PUBLICATION
(21) Application No.202014035935 A
(19) INDIA
(22) Date of filing of Application :20/08/2020
(43) Publication Date : 05/03/2021

(54) Title of the invention : METHOD OF PRODUCING POROUS BODY OF WATER-INSOLUBLE POLYMER

(51) International classification	:C08J0009280000, H01M0008108100, C08J0003140000, B01D0067000000, B01J0020260000
(31) Priority Document No	:2019-156314
(32) Priority Date	:29/08/2019
(33) Name of priority country	:Japan
(86) International Application No	:NA
Filing Date	:NA
(87) International Publication No	: NA
(61) Patent of Addition to Application Number	:NA
Filing Date	:NA
(62) Divisional to Application Number	:NA
Filing Date	:NA

(71)**Name of Applicant :**
1)TOYOTA JIDOSHA KABUSHIKI KAISHA
Address of Applicant :1, Toyota-cho, Toyota-shi, Aichi-ken, 471-8571, Japan Japan
(72)**Name of Inventor :**
1)Kohei MATSUNOBU
2)Akio MINAKUCHI
3)Hiroshi UYAMA
4)Chiaki YOSHIZAWA

(57) Abstract :
ABSTRACT METHOD OF PRODUCING POROUS BODY OF WATER-INSOLUBLE POLYMER Provided is a method of producing a porous body of a water-insoluble polymer, the method being excellent in terms of simplicity. The method of producing a porous body of a water-insoluble polymer disclosed here includes the steps of: preparing a solution in which a water-insoluble polymer is dissolved in a mixed solvent containing a good solvent for the water-insoluble polymer and a poor solvent for the water-insoluble polymer; and removing the mixed solvent from the solution by vaporization. The poor solvent has a boiling point higher than a boiling point of the good solvent. A porous body is obtained by removing the mixed solvent by vaporization to form pores.

No. of Pages : 28 No. of Claims : 7

(12) PATENT APPLICATION PUBLICATION
(19) INDIA
(22) Date of filing of Application :21/08/2020
(21) Application No.202014036135 A
(43) Publication Date : 05/03/2021

(54) Title of the invention : REMOTE MONITORING SYSTEM

(51) International classification	:H04M0017020000, G05B0023020000, H04H0060160000, G08B0021180000, G08B0025100000
(31) Priority Document No	:2019-154859
(32) Priority Date	:27/08/2019
(33) Name of priority country	:Japan
(86) International Application No	:NA
Filing Date	:NA
(87) International Publication No	: NA
(61) Patent of Addition to Application Number	:NA
Filing Date	:NA
(62) Divisional to Application Number	:NA
Filing Date	:NA

(71)**Name of Applicant :**
1)Hitachi Building Systems Co., Ltd.
Address of Applicant :2-101, Kandaawaji-cho, Chiyoda-ku, Tokyo 101-8941, Japan Japan
(72)**Name of Inventor :**
1)Syougo Uotani
2)Yosuke Onishi

(57) Abstract :
ABSTRACT REMOTE MONITORING SYSTEM An elevating machine monitoring system includes an alarm receiver that outputs, to a contract information setting device, an abnormality alarm issued from an elevating machine monitoring device, and a contract information recording device that records contract information set and updated by the contract information setting device. The contract information setting device includes a comparison output part that outputs, in a comparable manner, the contract information already set at a time when the abnormality alarm is output from the alarm receiver and information on the abnormality alarm, and contract information recommended by the elevating machine monitoring system and information on an abnormality alarm issued in accordance with the contract information recommended.

No. of Pages : 57 No. of Claims : 7

(12) PATENT APPLICATION PUBLICATION
(19) INDIA
(22) Date of filing of Application :21/08/2020
(21) Application No.202014036138 A
(43) Publication Date : 05/03/2021

(54) Title of the invention : METHOD FOR PREPARING COMPONENT

(51) International classification	:G06Q0010060000, G06F0009455000, B65G0047140000, G06Q0010040000, F03D0080500000
(31) Priority Document No	:2019-156359
(32) Priority Date	:29/08/2019
(33) Name of priority country	:Japan
(86) International Application No	:NA
Filing Date	:NA
(87) International Publication No	: NA
(61) Patent of Addition to Application Number	:NA
Filing Date	:NA
(62) Divisional to Application Number	:NA
Filing Date	:NA

(71)**Name of Applicant :**
1)Hitachi Building Systems Co., Ltd.
Address of Applicant :2-101, Kandaawaji-cho, Chiyoda-ku, Tokyo 101-8941, Japan Japan
(72)**Name of Inventor :**
1)Ryotaro Imoto
2)Yutaka Maruoka

(57) Abstract :
ABSTRACT METHOD FOR PREPARING COMPONENT A delivery cost needed to deliver, to a place where an elevating machine is installed, a replacement component predicted on the basis of operation status or failure occurrence status of the elevating machine is calculated. A determination is made as to whether preparation is possible on the basis of the delivery cost thus calculated, and, when a determination is made that delivery is possible, an instruction to deliver the replacement component thus predicted to the place where the elevating machine is installed is provided.

No. of Pages : 45 No. of Claims : 6

(12) PATENT APPLICATION PUBLICATION
(19) INDIA
(22) Date of filing of Application :21/08/2020

(21) Application No.202014036181 A
(43) Publication Date : 05/03/2021

(54) Title of the invention : METHOD FOR PREDICTING A ROUTE

(51) International classification	:G01N0033533000, H05B0031000000, B01J0020286000, C02F0003280000, B63C0007260000
(31) Priority Document No	:102019212817.3
(32) Priority Date	:27/08/2019
(33) Name of priority country	:Germany
(86) International Application No	:NA
Filing Date	:NA
(87) International Publication No	: NA
(61) Patent of Addition to Application Number	:NA
Filing Date	:NA
(62) Divisional to Application Number	:NA
Filing Date	:NA

(71)**Name of Applicant :**
1)ROBERT BOSCH GMBH
Address of Applicant :Postfach 30 02 20, 70442 Stuttgart, Germany Germany
(72)**Name of Inventor :**
1)FRITSCH, Andreas
2)JIN, Chen

(57) Abstract :
The present subject manner relates to a method for predicting a route (21-24) of a motor vehicle. A starting position (30) of the motor vehicle is determined therein. 5 It is checked whether there is a start position (30) of a previous route (21 - 24) of the motor vehicle stored in a memory in a predeterminable radius (40) around the start position (30). A predicted route is selected from the saved routes.

No. of Pages : 21 No. of Claims : 14

(12) PATENT APPLICATION PUBLICATION
(21) Application No.202014036234 A
(19) INDIA
(22) Date of filing of Application :22/08/2020
(43) Publication Date : 05/03/2021

(54) Title of the invention : A FILTERING DEVICE FOR DAMPING VIBRATIONS IN A CONDUIT OF A HYDRAULIC ACTUATION SYSTEM FOR DISENGAGING A CLUTCH

(51) International classification	:B05B0001160000, B60T0011232000, B29C0045580000, F25B0017080000, B60T0011200000
(31) Priority Document No	:IT 102019000015012
(32) Priority Date	:26/08/2019
(33) Name of priority country	:Italy
(86) International Application No	:NA
Filing Date	:NA
(87) International Publication No	: NA
(61) Patent of Addition to Application Number	:NA
Filing Date	:NA
(62) Divisional to Application Number	:NA
Filing Date	:NA

(71)**Name of Applicant :**
1)RAICAM DRIVELINE S.r.l.
Address of Applicant :Corso Francia 4, I-12084 MONDOVI€™ (Cuneo) Italy Italy
(72)**Name of Inventor :**
1)Jean Baptiste BEDRIGNANS
2)Francesca BOTTO

(57) Abstract :
ABSTRACT Title of the Invention:- A filtering device for damping vibrations in a conduit of a hydraulic actuation system for disengaging a clutch A filtering device comprises a tubular outer body with a chamber (14) containing a pair of cup-shaped valve elements (21, 22) mounted floating and slidable coaxially with opposing cavities in which an axially compressed spring (23) is housed. A first valve element (21) is arranged coaxially outside the second (22) and has a base (25) with a central opening (26) and a tubular portion with a series of ribs (27). The second valve element (22) has a perforated base (32) which may abut against a perforated plug (37) fixed to one side of the cavity passing towards the master cylinder. The plug (37) forms a through seat (36) which slidably houses an appendage (35) of the second valve element (22). Passages (39) are formed around the plug which establish fluid communication between the chamber (14) and a passage (15) to the master cylinder. Figure: 1

No. of Pages : 15 No. of Claims : 6

(12) PATENT APPLICATION PUBLICATION
(19) INDIA
(22) Date of filing of Application :24/08/2020
(21) Application No.202014036350 A
(43) Publication Date : 05/03/2021

(54) Title of the invention : LIGHT EMITTING DIODE AND LIGHT EMITTING DEVICE INCLUDING THE SAME

(51) International classification	:G06F0017210000, G06F0017240000, G06F0016930000, B41M0003140000, G06F0017220000
(31) Priority Document No	:10-2019-0109454
(32) Priority Date	:04/09/2019
(33) Name of priority country	:Republic of Korea
(86) International Application No	:NA
Filing Date	:NA
(87) International Publication No	: NA
(61) Patent of Addition to Application Number	:NA
Filing Date	:NA
(62) Divisional to Application Number	:NA
Filing Date	:NA

(71)**Name of Applicant :**
1)LG Display Co., Ltd
Address of Applicant :128, Yeoui-daero, Yeongdeungpo-gu, Seoul, 07336, Republic of Korea Republic of Korea
(72)**Name of Inventor :**
1)Park, Jae-Hyun

(57) Abstract :
The present disclosure relates to a light emitting diode (LED) that includes a charge control layer (260) made of metal component and disposed between a first electrode (210) and a second electrode (230) and a light emitting device including the diode. Charges can be injected into an emitting material layer (240) of the LED in a balanced manner, thus the luminous efficiency and a luminous lifetime of the LED and the light emitting device can be improved.

No. of Pages : 43 No. of Claims : 20

(12) PATENT APPLICATION PUBLICATION
(21) Application No.202014036444 A
(19) INDIA
(22) Date of filing of Application :24/08/2020
(43) Publication Date : 05/03/2021

(54) Title of the invention : COLLISION AVOIDANCE ASSISTANCE APPARATUS

(51) International classification	:G01N0033533000, H05B0031000000, B01J0020286000, C02F0003280000, B63C0007260000
(31) Priority Document No	:2019-159260
(32) Priority Date	:02/09/2019
(33) Name of priority country	:Japan
(86) International Application No	:NA
Filing Date	:NA
(87) International Publication No	: NA
(61) Patent of Addition to Application Number	:NA
Filing Date	:NA
(62) Divisional to Application Number	:NA
Filing Date	:NA

(71)**Name of Applicant :**
1)TOYOTA JIDOSHA KABUSHIKI KAISHA
Address of Applicant :1, Toyota-cho, Toyota-shi, Aichi-ken, 471-8571, Japan Japan
(72)**Name of Inventor :**
1)IKE, Wataru
2)HOSHIKAWA, Yuma
3)MURAKAMI, Ryota
4)SHIMBO, Yuto

(57) Abstract :
When a collision avoidance target is a pedestrian or a bicycle (S11: Yes), a driving assistance ECU (10) performs automatic braking control (S12). In this 5 case, accelerator override cannot be performed. When the collision avoidance target is an automobile (S11: No) and when an accelerator operation amount (AP) is equal to or larger than a first operation amount threshold (AP1) (S13: Yes), the driving assistance ECU (10) prohibits the automatic braking control (S14). In this case, the accelerator override can be performed. When the accelerator operation 10 amount (AP) is smaller than the first operation amount threshold (AP1) (S13: No), the driving assistance ECU (10) performs the automatic braking control (S12)

No. of Pages : 38 No. of Claims : 4

(12) PATENT APPLICATION PUBLICATION
(19) INDIA
(22) Date of filing of Application :24/08/2020
(21) Application No.202014036452 A
(43) Publication Date : 05/03/2021

(54) Title of the invention : METHOD FOR REGENERATION OF AN EXHAUST GAS PARTICLE FILTER

(51) International classification	:G01N0033533000, H05B0031000000, B01J0020286000, C02F0003280000, B63C0007260000
(31) Priority Document No	:102019212815.7
(32) Priority Date	:27/08/2019
(33) Name of priority country	:Germany
(86) International Application No	:NA
Filing Date	:NA
(87) International Publication No	: NA
(61) Patent of Addition to Application Number	:NA
Filing Date	:NA
(62) Divisional to Application Number	:NA
Filing Date	:NA

(71)**Name of Applicant :**
1)ROBERT BOSCH GMBH
Address of Applicant :Postfach 30 02 20, 70442 Stuttgart, Germany Germany
(72)**Name of Inventor :**
1)FRITSCH, Andreas
2)JIN, Chen

(57) Abstract :
The present subject matter relates to a method for the regeneration (52) of an exhaust gas particle filter (15) of a motor vehicle, in which the course of regeneration (52) with different starting times is simulated on a predicted route of the motor vehicle. The starting point is selected for carrying out the regeneration (52) at which a predefinable optimization criterion of the regeneration (52) is probably best met.

No. of Pages : 18 No. of Claims : 11

(12) PATENT APPLICATION PUBLICATION
(21) Application No.202014036493 A
(19) INDIA
(22) Date of filing of Application :25/08/2020
(43) Publication Date : 05/03/2021

(54) Title of the invention :INVERTER AND HEAT DISSIPATION DEVICE THEREOF€ •

(51) International classification	:H05K0007200000, H01L0023467000, H01L0023340000, H01L0023400000, G12B0015060000
(31) Priority Document No	:201921429782.5
(32) Priority Date	:29/08/2019
(33) Name of priority country	:China
(86) International Application No	:NA
Filing Date	:NA
(87) International Publication No	: NA
(61) Patent of Addition to Application Number	:NA
Filing Date	:NA
(62) Divisional to Application Number	:NA
Filing Date	:NA

(71)**Name of Applicant :**
1)SUNGROW POWER SUPPLY CO., LTD.
Address of Applicant :No. 1699 Xiyou Rd., New & High Technology Industrial Development Zone, Hefei, Anhui 230088, P. R. China China
(72)**Name of Inventor :**
1)ZHOU, Jie
2)CHEN, Peng
3)HU, Liwen
4)AI, Pengli
5)WANG, Peng
6)TAO, Gaozhou

(57) Abstract :
ABSTRACT INVERTER AND HEAT DISSIPATION DEVICE THEREOF A heat dissipation device of an inverter is provided disclosed by the present application, which includes a heat sink base, a cooling module and a temperature equalizing plate arranged on the heat sink base. The cooling module is configured to dissipate heat from the heat sink base, the temperature equalizing plate is provided with a part mounting seat, and the heat sink base is arranged between the cooling module and the temperature equalizing plate. When in use, the heat sink base is mounted on the cooling module, the temperature equalizing plate is mounted on the heat sink base, and a part is mounted on the part mounting seat. In the heat dissipation device provided by the present application, since the temperature equalizing plate serves as a two-dimensional planar heat-conduction structure, the heat of the part is dissipated through the entire surface of the temperature equalizing plate, and then the heat is conducted to the heat sink base and the cooling module far more quickly. Therefore, the heat dissipation efficiency of the heat dissipation device is improved.

No. of Pages : 14 No. of Claims : 12

(12) PATENT APPLICATION PUBLICATION
(21) Application No.202014036542 A
(19) INDIA
(22) Date of filing of Application :25/08/2020
(43) Publication Date : 05/03/2021

(54) Title of the invention : METHOD OF HANDLING CELL SELECTION AND RELATED NETWORK DEVICE AND MOBILE DEVICE

(51) International classification	:G01N0033533000, H05B0031000000, B01J0020286000, C02F0003280000, B63C0007260000
(31) Priority Document No	:62/891,565
(32) Priority Date	:26/08/2019
(33) Name of priority country	:U.S.A.
(86) International Application No	:NA
Filing Date	:NA
(87) International Publication No	: NA
(61) Patent of Addition to Application Number	:NA
Filing Date	:NA
(62) Divisional to Application Number	:NA
Filing Date	:NA

(71)**Name of Applicant :**
1)ACER INCORPORATED
Address of Applicant :8F, 88, Sec. 1, Hsin Tai Wu Rd., Xizhi Dist., New Taipei City, (Postal code: 221) Taiwan
(72)**Name of Inventor :**
1)Ching-Wen Cheng

(57) Abstract :
The present invention provides a method of providing configuration of cell search information for a network device of a non-terrestrial network (NTN). The network device has a serving cell on which a mobile device is allowed to camp. The method includes a step of transmitting at least one location information of reference points for the configuration of cell search information for at least one mobile device, to configure the mobile device to determine whether to perform cell search for cell reselection according to the configuration of cell search information (402).

No. of Pages : 34 No. of Claims : 23

(12) PATENT APPLICATION PUBLICATION
(19) INDIA
(22) Date of filing of Application :25/08/2020
(21) Application No.202014036562 A
(43) Publication Date : 05/03/2021

(54) Title of the invention : CAPSULE TYPE FIRE EXTINGUISHER FOR PREVENTING BATTERY EXPLOSION AND BATTERY HAVING THE FIRE EXTINGUISHER

(51) International classification	:A61B0001040000, A61B0001000000, H01M0002120000, A62C0013760000, A61B0005070000
(31) Priority Document No	:10-2019-0108651
(32) Priority Date	:03/09/2019
(33) Name of priority country	:Republic of Korea
(86) International Application No	:NA
Filing Date	:NA
(87) International Publication No	: NA
(61) Patent of Addition to Application Number	:NA
Filing Date	:NA
(62) Divisional to Application Number	:NA
Filing Date	:NA

(71)**Name of Applicant :**
1)FIREKIM Co., Ltd.
Address of Applicant :#208, 48, Jungsimsangeop 2-ro, Ochang-eup, Cheongwon-gu, Cheongju-si, Chungcheongbuk-do 28119 Republic of Korea Republic of Korea
2)KIM, Byung Yul
(72)**Name of Inventor :**
1)KIM, Byung Yul

(57) Abstract :
A capsule-type fire extinguisher for preventing a battery explosion, and a battery including the capsule-type fire extinguisher are disclosed. The capsule-type fire extinguisher includes an extinguishing capsule including an extinguishing material configured to extinguish a fire by being externally discharged as being expanded and exploded by external heat in an inside thereof, a fixing member configured to fix the extinguishing capsule to the battery, and a forced exhaust provided on one side of the extinguishing capsule and configured to destroy at least one of the extinguishing capsule or the battery.

No. of Pages : 24 No. of Claims : 16

(12) PATENT APPLICATION PUBLICATION
(21) Application No.202014036581 A
(19) INDIA
(22) Date of filing of Application :25/08/2020
(43) Publication Date : 05/03/2021

(54) Title of the invention : MANAGEMENT DEVICE FOR SPINNING MACHINE AND SPINNING MACHINE WITH MANAGEMENT DEVICE

(51) International classification	:D04B0035320000, D01H0011000000, D01H0005600000, D01H0005640000, D01H0005720000	(71)**Name of Applicant :** **1)MURATA MACHINERY, LTD.** Address of Applicant :3 Minami Ochiai-cho, Kisshoin, Minami-ku, Kyoto-shi, Kyoto 601-8326, Japan Japan (72)**Name of Inventor :** **1)SUSAMI Hiroyuki**
(31) Priority Document No	:2019-158788	
(32) Priority Date	:30/08/2019	
(33) Name of priority country	:Japan	
(86) International Application No	:NA	
Filing Date	:NA	
(87) International Publication No	: NA	
(61) Patent of Addition to Application Number	:NA	
Filing Date	:NA	
(62) Divisional to Application Number	:NA	
Filing Date	:NA	

(57) Abstract :
ABSTRACT MANAGEMENT DEVICE FOR SPINNING MACHINE AND SPINNING MACHINE WITH MANAGEMENT DEVICE A management device 9 manages a spinning machine 100 including a spinning device 3 and a fiber waste collecting device 83. The spinning device 3 forms a spun yarn Y. The fiber waste collecting device 83 collects fiber waste generated during formation of the spun yarn Y. The management device 9 includes a control device 90. A static pressure in the fiber waste collecting device 83 changes in accordance with a quantity of fiber waste collected by the fiber waste collecting device 83 and accumulated. The control device 90 calculates a fiber waste generation quantity of the spinning machine 100 on the basis of the static pressure. [Most Illustrative Drawing] FIG. 1

No. of Pages : 77 No. of Claims : 15

(12) PATENT APPLICATION PUBLICATION
(19) INDIA
(22) Date of filing of Application :25/08/2020

(21) Application No.202014036583 A
(43) Publication Date : 05/03/2021

(54) Title of the invention : ELECTRIC COMPRESSOR

(51) International classification	:F04C0018020000, F04C0023000000, F04C0029000000, F04C0029020000, F16F0015320000
(31) Priority Document No	:2019-157611
(32) Priority Date	:30/08/2019
(33) Name of priority country	:Japan
(86) International Application No	:NA
Filing Date	:NA
(87) International Publication No	: NA
(61) Patent of Addition to Application Number	:NA
Filing Date	:NA
(62) Divisional to Application Number	:NA
Filing Date	:NA

(71)**Name of Applicant :**
1)KABUSHIKI KAISHA TOYOTA JIDOSHOKKI
Address of Applicant :2-1, Toyoda-cho, kariya-shi, Aichi-ken, Japan Japan
(72)**Name of Inventor :**
1)Yuya Hattori
2)Takuro Yamashita
3)Takumi Maeda

(57) Abstract :
ABSTRACT ELECTRIC COMPRESSOR An electric compressor includes a housing (1, 13, 15), a drive shaft (5), a motor (7), a fixed scroll (9), a movable scroll (11), and a fixed block (3). The fixed block (3) is fixed to the housing (1, 13, 15) and disposed between the motor (7) and the movable scroll (11). The motor (7) includes a stator (7a) and a rotor (7b). The rotor (7b) has an introduction passage (77a-77e) that is formed through the rotor (7b) in an axial direction of the drive shaft (5). The drive shaft (5) includes a balance weight (33) that is disposed between the fixed block (3) and the motor (7). The balance weight (33) extends to a position where the balance weight (33) covers at least a part of the introduction passage (77e) in a radial direction of the drive shaft (5) in a view in the axial direction of the drive shaft (5). The balance weight (33) is located away from the rotor (7b) by a predetermined distance (L2) in the axial direction of the drive shaft (5). Refer FIG.1

No. of Pages : 33 No. of Claims : 4

(12) PATENT APPLICATION PUBLICATION
(21) Application No.202014036672 A
(19) INDIA
(22) Date of filing of Application :26/08/2020
(43) Publication Date : 05/03/2021

(54) Title of the invention :OPTICAL IMAGING LENS GROUP€ •

(51) International classification	:G02B0013000000, G02B0009620000, G02B0009640000, G02B0009600000, H04N0009090000
(31) Priority Document No	:201910827432.2
(32) Priority Date	:03/09/2019
(33) Name of priority country	:China
(86) International Application No	:NA
Filing Date	:NA
(87) International Publication No	: NA
(61) Patent of Addition to Application Number	:NA
Filing Date	:NA
(62) Divisional to Application Number	:NA
Filing Date	:NA

(71)**Name of Applicant :**
1)Zhejiang Sunny Optical Co., Ltd
Address of Applicant :No. 66-68 Shunyu Road, Yuyao, Ningbo City, Zhejiang Province 315400, China China
(72)**Name of Inventor :**
1)XU, Biao
2)ZHANG, Kaiyuan
3)WANG, Xiaofang
4)DAI, Fujian
5)ZHAO, Liefeng

(57) Abstract :
ABSTRACT OPTICAL IMAGING LENS GROUP The present disclosure discloses an optical imaging lens group including, sequentially from an object side to an image side along an optical axis, a first lens having positive refractive power with a convex object-side surface; a second lens having refractive power; a third lens having refractive power; a fourth lens having refractive power; a fifth lens having refractive power; and a sixth lens having negative refractive power with a concave object-side surface and a convex image-side surface. A total effective focal length f of the optical imaging lens group, an entrance pupil diameter EPD of the optical imaging lens group and half of a maximal field-of-view Semi-FOV of the optical imaging lens group satisfy: f/EPD < 2, and ftan(Semi-FOV) > 4.5 mm. Figure. 1

No. of Pages : 45 No. of Claims : 20

(12) PATENT APPLICATION PUBLICATION
(19) INDIA
(22) Date of filing of Application :26/08/2020
(21) Application No.202014036761 A
(43) Publication Date : 05/03/2021

(54) Title of the invention : EDGE SEQUENCING WITH AN IMMOBILIZED TRANSLOCATOR

(51) International classification	:G01N0033533000, H05B0031000000, B01J0020286000, C02F0003280000, B63C0007260000
(31) Priority Document No	:16/555924
(32) Priority Date	:29/08/2019
(33) Name of priority country	:U.S.A.
(86) International Application No	:NA
Filing Date	:NA
(87) International Publication No	: NA
(61) Patent of Addition to Application Number	:NA
Filing Date	:NA
(62) Divisional to Application Number	:NA
Filing Date	:NA

(71)**Name of Applicant :**
1)ROBERT BOSCH GMBH
Address of Applicant :Postfach 30 02 20 70442 Stuttgart, Germany Germany
(72)**Name of Inventor :**
1)NADEZDA, Fomina
2)CHRISTOPHER, Johnson
3)YOUNG, Shik Shin
4)CHRISTOPH, Lang

(57) Abstract :
The present disclosure relates to systems, devices, and methods for nucleic acid sequencing including polynucleotide strands having a nucleotide(s) modified with a redox label(s) attached thereto or capable of receiving the modified nucleotide(s) with a redox label(s) attached thereto. The systems, devices, and methods include a dielectric member with an attached translocating protein positioned between oxidizing and reducing electrodes. The oxidizing and reducing electrodes generate an electrical field extending to a reaction area where the translocation of the polynucleotide strand through the protein occurs such the modified nucleotide(s) with redox label(s) attached thereto are identified by changes in current flow in the oxidizing and reducing electrodes, wherein the changes identify electron transfer from the reducing electrode, to redox label, and to oxidizing electrode when the modified nucleotide with a redox label covalently bonded to the nucleoside base of the modified nucleotide of the polynucleotide strand is at the reaction area.

No. of Pages : 74 No. of Claims : 24

(12) PATENT APPLICATION PUBLICATION
(21) Application No.202014037001 A
(19) INDIA
(22) Date of filing of Application :27/08/2020
(43) Publication Date : 05/03/2021

(54) Title of the invention : ELECTRONIC DEVICE AND METHOD OF PROCESSING EXERCISEINFORMATION BY ELECTRONIC DEVICE

(51) International classification	:C07D0403120000, H04W0036220000, C07D0403140000, C07D0417060000, C07D0413040000	(71)**Name of Applicant :** **1)SAMSUNG ELECTRONICS CO., LTD.** Address of Applicant :129, Samsung-ro, Yeongtong-gu, Suwon-si, Gyeonggi-do, 16677, Republic of Korea Republic of Korea
(31) Priority Document No	:10-2019-0107670	(72)**Name of Inventor :**
(32) Priority Date	:30/08/2019	**1)Hyeeun CHOI**
(33) Name of priority country	:Republic of Korea	**2)Daesung CHO**
(86) International Application No	:NA	**3)Minhwan JO**
Filing Date	:NA	
(87) International Publication No	: NA	
(61) Patent of Addition to Application Number	:NA	
Filing Date	:NA	
(62) Divisional to Application Number	:NA	
Filing Date	:NA	

(57) Abstract :
An electronic device and a method of processing exercise information by an electronic device are provided. The electronic device includes at least one communication module, a display, at least one sensor, and a processor. The processor may perform control to make a connection with at least one external electronic device through the communication module, identify first exercise-related information measured during a first time interval, based on information received from the at least one external electronic device, identify second exercise-related information measured during a second time interval after the first time interval, based on information received from the at least one external electronic device, and when it is determined that the identified first exercise-related information and the identified second exerciserelated information are information on a correlated exercise, based on a configured reference, display the first exercise-related information and the second exerciserelated information as one continuous exercise through the display.

No. of Pages : 127 No. of Claims : 15

(12) PATENT APPLICATION PUBLICATION
(19) INDIA
(22) Date of filing of Application :28/08/2020
(21) Application No.202014037058 A
(43) Publication Date : 05/03/2021

(54) Title of the invention : ECOLOGICAL SYSTEM FOR RECYCLING AND ULTRALOW DRAINAGE OF PAPER-MAKING WHITE WATER

(51) International classification	:A61M0001160000, D21D0005180000, D21H0017010000, F28B0007000000, C07C0011240000
(31) Priority Document No	:201910807073.4 (CN)
(32) Priority Date	:29/08/2019
(33) Name of priority country	:China
(86) International Application No	:NA
Filing Date	:NA
(87) International Publication No	: NA
(61) Patent of Addition to Application Number	:NA
Filing Date	:NA
(62) Divisional to Application Number	:NA
Filing Date	:NA

(71)**Name of Applicant :**
1)Qingdao Zhongze Environmental Protection Technology Co.,Ltd.
Address of Applicant :705-3, B8 Hengxing Zhiling Shuangchuang Base, No. 588, East Jiushui Road, Licang District, Qingdao, Shandong 266000, China [CN] China
(72)**Name of Inventor :**
1)MA, MINGWEI
2)MA, Xingong

(57) Abstract :
The present invention relates to the technical field of recycling and drainage of paper-making white water, in particular to an ecological system for recycling and ultralow drainage of paper-making white water. A first-stage ultrasonic dialysis treatment tower is arranged on one side of a second-stage ultrasonic dialysis treatment tower, the second-stage ultrasonic dialysis treatment tower is connected with the first-stage ultrasonic dialysis treatment tower through a first overflow pipe, and a third-stage ultrasonic dialysis treatment tower is arranged on the other side of the second-stage ultrasonic dialysis treatment tower. The present invention realizes high-efficiency recycling of white water through an ultralow drainage ecological system, and reduces running off of fiber fines and fillers by 95% or above and water consumption by 80-90%, while ensuring optimal paper-making quality. In this way, energy conservation, consumption reduction and reduction of discharge of waste and noxious substances to environment are realized, favorable paper-making white water ecological environment is also kept, and the paper-making industry becomes a low-pollution industry.

No. of Pages : 22 No. of Claims : 8

(12) PATENT APPLICATION PUBLICATION
(21) Application No.202014037074 A
(19) INDIA
(22) Date of filing of Application :28/08/2020
(43) Publication Date : 05/03/2021

(54) Title of the invention : DECORATIVE FILM, METHOD OF PRODUCING DECORATIVE FILM, DECORATED MOLDED ARTICLE, AND METHOD OF PRODUCING DECORATED MOLDED ARTICLE

(51) International classification	:B32B0007120000, B32B0027300000, B29C0045140000, B32B0027360000, B44C0001100000
(31) Priority Document No	:2019-157871
(32) Priority Date	:30/08/2019
(33) Name of priority country	:Japan
(86) International Application No	:NA
Filing Date	:NA
(87) International Publication No	: NA
(61) Patent of Addition to Application Number	:NA
Filing Date	:NA
(62) Divisional to Application Number	:NA
Filing Date	:NA

(71)**Name of Applicant :**
1)SUZUKI MOTOR CORPORATION
Address of Applicant :300 Takatsuka-cho, Minami-ku, Hamamatsu-shi, Shizuoka 432-8611, Japan Japan
(72)**Name of Inventor :**
1)Shintaro KAJI
2)Tadahiko INAGAKI
3)Haruyuki ISHIZU
4)Shunsuke YAMADA
5)Hideya SUZUKI

(57) Abstract :
A decorative film including in the following order: a skin layer; a base material layer; an adhesive layer; an adhesive layer protective sheet; and a shape retention layer, in which the adhesive layer protective sheet has, on a side in contact with the adhesive layer, ruggedness that allows communication of a fluid and has protrusions having a height of more than 15 μm, and in which the decorative film is used for decorating a molded article having a three-dimensional shape, as well as a method of producing a decorative film, a decorated molded article, and a method of producing a decorated molded article are provided.

No. of Pages : 44 No. of Claims : 14

(12) PATENT APPLICATION PUBLICATION
(19) INDIA
(22) Date of filing of Application :28/08/2020
(21) Application No.202014037230 A
(43) Publication Date : 05/03/2021

(54) Title of the invention : A PROCESS FOR HYDROTREATING A HYDROCARBON RESIDUE STREAM

(51) International classification	:C10G0065120000, C10G0045020000, C10G0045080000, C10G0065040000, C10G0065160000
(31) Priority Document No	:16/558, 067
(32) Priority Date	:31/08/2019
(33) Name of priority country	:U.S.A.
(86) International Application No	:NA
Filing Date	:NA
(87) International Publication No	: NA
(61) Patent of Addition to Application Number	:NA
Filing Date	:NA
(62) Divisional to Application Number	:NA
Filing Date	:NA

(71)**Name of Applicant :**
1)UOP LLC
Address of Applicant :25 East Algonquin Road P.O. Box 5017 Des Plaines, Illinois 60017-5017, United States of America U.S.A.
(72)**Name of Inventor :**
1)SUN PING

(57) Abstract :
A process for hydrotreating a hydrocarbon residue stream is provided. The process comprises hydrotreating the hydrocarbon residue stream over a demetallation catalyst to demetallize the hydrocarbon residue stream to provide a demetallized hydrocarbon residue stream reduced in metals and sulfur concentration. The demetallized hydrocarbon residue stream is separated in a hot separator to provide an overhead vapor stream comprising hydrogen and a bottoms liquid stream. The bottoms liquid stream is split into a first liquid stream and a second liquid stream comprising low sulfur fuel oil. The second liquid stream is recovered as a low sulfur fuel oil product stream. The first liquid stream is hydrotreated over a desulfurization catalyst in the presence of at least a portion of the overhead vapor stream to provide a desulfurized hydrocarbon residue stream. The present process provides low sulfur fuel oil product stream comprising from 0.3 wt% to 1.5 wt% sulfur.

No. of Pages : 30 No. of Claims : 10

(12) PATENT APPLICATION PUBLICATION
(21) Application No.202014037300 A
(19) INDIA
(22) Date of filing of Application :29/08/2020
(43) Publication Date : 05/03/2021

(54) Title of the invention : OPTICAL IMAGING SYSTEM AND CAMERA MODULE INCLUDING THE SAME

(51) International classification	:C07D0403120000, H04W0036220000, C07D0403140000, C07D0417060000, C07D0413040000	(71)**Name of Applicant :** **1)SAMSUNG ELECTRO-MECHANICS CO., LTD.** Address of Applicant :Maeyoung-ro 150 (Maetan-dong), Youngtong-gu, Suwon-si, Gyeonggi-do, Republic of Korea Republic of Korea
(31) Priority Document No	:10-2019-0107774	(72)**Name of Inventor :**
(32) Priority Date	:30/08/2019	**1)Jae Hyuk HUH**
(33) Name of priority country	:Republic of Korea	**2)Jin Se KIM**
(86) International Application No	:NA	**3)Yong Joo JO**
Filing Date	:NA	**4)Hyo Jin HWANG**
(87) International Publication No	: NA	
(61) Patent of Addition to Application Number	:NA	
Filing Date	:NA	
(62) Divisional to Application Number	:NA	
Filing Date	:NA	

(57) Abstract :
OPTICAL IMAGING SYSTEM AND CAMERA MODULE INCLUDING THE SAME An optical imaging system includes a first lens, a second lens, a third lens, a fourth lens, and a fifth lens sequentially disposed along an optical axis from an object-side surface of the first lens toward an imaging plane of an image sensor, wherein3.5 ≤ TTL/IMG HT, f1+f2| < 2.0 mm, and 0.7 ≤ L1S1es/L1S1el < 1.0 are satisfied, where TTL is a distance along the optical axis from the object-side surface of the first lens to the imaging plane of the image sensor, IMG HT is one-half of a diagonal length of the imaging plane of the image sensor, f1 is a focal length of the first lens, f2 is a focal length of the second lens, L1S1el is a maximum effective radius of the object-side surface of the first lens, and L1S1es is a minimum effective radius of the object-side surface of the first lens.

No. of Pages : 82 No. of Claims : 41

(12) PATENT APPLICATION PUBLICATION
(19) INDIA
(22) Date of filing of Application :31/08/2020
(21) Application No.202014037555 A
(43) Publication Date : 05/03/2021

(54) Title of the invention : THE PHARMACEUTICAL COMPOSITION INTENDED TO INHIBIT HIVINFECTIVITY IN ORDER TO TREAT THE ACQUIRED IMMUNE DEFICIENCY SYNDROME (AIDS) AND ITS COMPLICATIONS

(51) International classification	:A61K0031575000, A61K0039000000, A61K0031580000, A61K0031585000, A61K0031365000
(31) Priority Document No	:1909590
(32) Priority Date	:30/08/2019
(33) Name of priority country	:France
(86) International Application No	:NA
Filing Date	:NA
(87) International Publication No	: NA
(61) Patent of Addition to Application Number	:NA
Filing Date	:NA
(62) Divisional to Application Number	:NA
Filing Date	:NA

(71)**Name of Applicant :**
1)MONKAM NITCHEU Guy Faustin
Address of Applicant :47 Rue de Bthune 59800 Lille France France
(72)**Name of Inventor :**
1)MONKAM NITCHEU Guy Faustin

(57) Abstract :
This invention relates to a pharmaceutical composition used to inhibit pathogenic agents from penetrating target cells. It can also be used in the prevention or treatment of HIV infections, prevent the appearance or advance of AIDS and its various consequences.

No. of Pages : 19 No. of Claims : 10

(12) PATENT APPLICATION PUBLICATION
(19) INDIA
(22) Date of filing of Application :24/04/2020
(21) Application No.202017017586 A
(43) Publication Date : 05/03/2021

(54) Title of the invention : AUTOMATED ENTERPRISE TRANSACTION DATA AGGREGATION AND ACCOUNTING

(51) International classification	:G06F 16/14, G06F 16/2457, G06F 16/383, G06F 17/18, G06Q 10/04
(31) Priority Document No	:62/726196
(32) Priority Date	:31/08/2018
(33) Name of priority country	:U.S.A.
(86) International Application No	:PCT/US2019/049373
Filing Date	:03/09/2019
(87) International Publication No	:WO 2020/047550
(61) Patent of Addition to Application Number	:NA
Filing Date	:NA
(62) Divisional to Application Number	:NA
Filing Date	:NA

(71)**Name of Applicant :**
1)MX TECHNOLOGIES, INC.
Address of Applicant :3401 N. Thanksgiving Way Suite 500 Lehi, Utah 84043 U.S.A.
(72)**Name of Inventor :**
1)DOTTER, James

(57) Abstract :
Apparatuses, systems, methods, and computer program products are presented for automated enterprise transaction data aggregation and accounting. A hardware computer server (110) is configured to create metadata records for a plurality of transactions for one or more accounts. A hardware computer server (110) is configured to determine a category for each of the transactions based on the metadata records. A hardware computer server (110) is configured to select an offer for a product based on determined categories and created metadata records. Computer executable program code installed on a non-transitory computer readable storage medium of a hardware device (102) comprises operations configured to receive, from a network interface of a hardware computer server (110) over a network interface of the hardware device (102), an offer for a product and to display the offer for a product to a user on an electronic display of the hardware device (102).

No. of Pages : 72 No. of Claims : 20

(12) PATENT APPLICATION PUBLICATION
(19) INDIA
(22) Date of filing of Application :19/05/2020

(21) Application No.202017021108 A
(43) Publication Date : 05/03/2021

(54) Title of the invention : COMPOSITION FOR ODOR SUPPRESSION

(51) International classification	:C08L 23/08, C08K 3/22
(31) Priority Document No	:62/725442
(32) Priority Date	:31/08/2018
(33) Name of priority country	:U.S.A.
(86) International Application No	:PCT/US2019/048126
Filing Date	:26/08/2019
(87) International Publication No	:WO 2020/046808
(61) Patent of Addition to Application Number	:NA
Filing Date	:NA
(62) Divisional to Application Number	:NA
Filing Date	:NA

(71)**Name of Applicant :**
1)DOW GLOBAL TECHNOLOGIES LLC
Address of Applicant :2040 Dow Center Midland, Michigan 48674 U.S.A.
(72)**Name of Inventor :**
1)KRASOVSKIY, Arkady L.
2)SUN, Kefu
3)LU, Keran
4)MATTUECCI, Scott T.
5)WILLIAMSON, Alexander
6)RUIZ, Jose Eduardo
7)BONEKAMP, Jeffrey E.

(57) Abstract :
A composition for odor control includes (A) from 85 wt% to 99.5 wt% of an olefin-based compound and (B) from 15 wt% to 0.5 wt% of an odor suppressant. The odor suppressant includes a blend of (i) an ionomer, (ii) particles of zinc oxide, and (iii) particles of copper oxide. The composition has a methyl mercaptan odor suppression value of greater than 45% as measured in accordance with ASTM D5504-12.

No. of Pages : 22 No. of Claims : 11

(12) PATENT APPLICATION PUBLICATION
(19) INDIA
(22) Date of filing of Application :30/05/2020
(21) Application No.202017022791 A
(43) Publication Date : 05/03/2021

(54) Title of the invention : FIBER WITH ODOR CONTROL COMPONENT

(51) International classification :C08L 23/08, D01F 8/06, C08K 3/22
(31) Priority Document No :62/725367
(32) Priority Date :31/08/2018
(33) Name of priority country :U.S.A.
(86) International Application No :PCT/US2019/048091
Filing Date :26/08/2019
(87) International Publication No :WO 2020/046787
(61) Patent of Addition to Application Number :NA
Filing Date :NA
(62) Divisional to Application Number :NA
Filing Date :NA

(71)**Name of Applicant :**
1)DOW GLOBAL TECHNOLOGIES LLC
Address of Applicant :2040 Dow Center Midland, Michigan 48674 U.S.A.
(72)**Name of Inventor :**
1)MATTUECCI, Scott T.
2)BONEKAMP, Jeffrey E.
3)KRASOVSKIY, Arkady L.
4)SUN, Kefu
5)LU, Keran
6)WEVERS, Ronald

(57) Abstract :
The present disclosure provides a fiber and fabrics made therefrom. In an embodiment, a fiber is provided and includes an odor control composition. The odor control composition includes (A) from 85 wt% to 99.5 wt% of an olefin-based polymer and (B) from 15 wt% to 0.5 wt% of an odor suppressant. The odor suppressant includes: (i) an ionomer, (ii) particles of zinc oxide, and (iii) particles of copper oxide.

No. of Pages : 27 No. of Claims : 15

(12) PATENT APPLICATION PUBLICATION
(19) INDIA
(22) Date of filing of Application :10/08/2020
(21) Application No.202017034298 A
(43) Publication Date : 05/03/2021

(54) Title of the invention : AUTOMATED SYSTEM FOR UNWINDING AND KNITTING FABRIC ROLLS

(51) International classification	:B65H0016100000, D04B0015880000, B65H0016020000, B65H0019120000, B65H0016060000
(31) Priority Document No	:NA
(32) Priority Date	:NA
(33) Name of priority country	:NA
(86) International Application No	:PCT/CN2019/104339
Filing Date	:04/09/2019
(87) International Publication No	: NA
(61) Patent of Addition to Application Number	:NA
Filing Date	:NA
(62) Divisional to Application Number	:NA
Filing Date	:NA

(71)**Name of Applicant :**
1)FONG€™S NATIONAL ENGINEERING (SHENZHEN) CO., LTD.
Address of Applicant :17-19 LiXin Road, DanZhuTou Industrial Zone, NanWan Sub-District, Longgang District, Shenzhen, Guangdong 518114, China China
(72)**Name of Inventor :**
1)TSUI, Tak Ming William

(57) Abstract :
This patent application provides a technical solution on automated system for unwinding and knitting fabric rolls. The whole system is comprised of a fabric roll orientation sensing device, a fabric roll unwinding device, a fabric end gripping device and a control system. The fabric roll orientation sensing device is connected to the fabric roll unwinding device, and meanwhile the fabric roll unwinding device is connected to the fabric end gripping device. The fabric roll orientation sensing device is composed of a transporting device and an object-to-be-detected which is located at one end of the fabric roll€™s shaft. The first sensor is installed on the transporting device and it is responsible for sensing the presence of the object-tobe-detected on the shaft end when the transporting device is approaching to the fabric roll. The fabric roll unwinding device contains the second sensor which is installed on the designated path of unwound fabric roll. The second sensor is utilized to sense another object-to-be-detected which is already sealed on the fabric end and the purpose of the second sensor is to facilitate monitoring on the position of unwinding fabrics. Regarding to the fabric end gripping device, it is utilized for grabbing the two opposite edges of the fabric end. Meanwhile the control system is connected to the fabric roll orientation sensing device, fabric roll unwinding device and fabric end gripping device, and is accountable for the overall function coordination.

No. of Pages : 21 No. of Claims : 10

(12) PATENT APPLICATION PUBLICATION
(21) Application No.202017034827 A
(19) INDIA
(22) Date of filing of Application :13/08/2020
(43) Publication Date : 05/03/2021

(54) Title of the invention : HEXAGONAL COLUMN-SHAPED BATTERY CELL, MANUFACTURING METHOD THEREFOR, AND BATTERY MODULE COMPRISING SAME

(51) International classification	:H01M 10/04, H01M 10/6555, H01M 10/64, H01M 10/613
(31) Priority Document No	:10-2018-0106083
(32) Priority Date	:05/09/2018
(33) Name of priority country	:Republic of Korea
(86) International Application No	:PCT/KR2019/010867
Filing Date	:26/08/2019
(87) International Publication No	:WO 2020/050534
(61) Patent of Addition to Application Number	:NA
Filing Date	:NA
(62) Divisional to Application Number	:NA
Filing Date	:NA

(71)**Name of Applicant :**
1)LG CHEM, LTD.
Address of Applicant :128, Yeoui-daero, Yeongdeungpo-Gu, Seoul 07336 Republic of Korea
(72)**Name of Inventor :**
1)PARK, Min-Hee
2)YOO, Ha-Neul
3)HA, Jong-Soo

(57) Abstract :
A battery cell according to one embodiment of the present invention includes: an electrode assembly having a hollow structure in which a hexagonal column-shaped hole is formed in a central portion thereof, and having a hexagonal column-shaped appearance; and a cell case accommodating the electrode assembly and having a hexagonal column-shaped appearance.

No. of Pages : 18 No. of Claims : 10

(12) PATENT APPLICATION PUBLICATION
(19) INDIA
(22) Date of filing of Application :21/08/2020
(21) Application No.202017036091 A
(43) Publication Date : 05/03/2021

(54) Title of the invention : METHOD FOR PREPARING GRAFT COPOLYMER AND GRAFT COPOLYMER

(51) International classification	:C08F 285/00, C08F 220/18, C08F 212/08, C08F 2/44
(31) Priority Document No	:10-2018-0106053
(32) Priority Date	:05/09/2018
(33) Name of priority country	:Republic of Korea
(86) International Application No	:PCT/KR2019/011009
Filing Date	:28/08/2019
(87) International Publication No	:WO 2020/050544
(61) Patent of Addition to Application Number	:NA
Filing Date	:NA
(62) Divisional to Application Number	:NA
Filing Date	:NA

(71)**Name of Applicant :**
1)LG CHEM, LTD.
Address of Applicant :128, Yeoui-daero Yeongdeungpo-gu Seoul 07336 Republic of Korea
(72)**Name of Inventor :**
1)AHN, Bong Keun
2)KIM, Min Jung
3)JOE, Wang Rae
4)HWANG, Yong Yeon
5)PARK, Jang Won
6)JEON, Ji Yoon

(57) Abstract :
The present invention relates to a method for preparing a graft copolymer and a graft copolymer, the method comprising the steps of: 1) feeding and polymerizing at least one selected from the group consisting of an alkyl (meth)acrylate-based monomer, an aromatic vinyl-based monomer, and a vinyl cyan-based monomer, to prepare seeds; 2) feeding and polymerizing an alkyl (meth)acrylate-based monomer in the presence of the seeds, thereby preparing cores; and 3) feeding and polymerizing an aromatic vinyl-based monomer and a vinyl cyan-based monomer in the presence of the cores, thereby preparing shells, wherein in step 3), an activator containing a compound represented by chemical formula 1 below is fed, and the cores have an average particle diameter of 320-520 nm. According to the above-described preparation method, a graft copolymer, which are particularly enhanced in impact resistance, thermal stability, surface clarity, whiteness, appearance quality, and weather resistance, and a graft copolymer can be provided.

No. of Pages : 33 No. of Claims : 15

(12) PATENT APPLICATION PUBLICATION
(21) Application No.202017036894 A
(19) INDIA
(22) Date of filing of Application :27/08/2020
(43) Publication Date : 05/03/2021

(54) Title of the invention : EXTERIOR TRIMMING PART FOR PILLAR OF VEHICLE

(51) International classification :B60R 13/04
(31) Priority Document No :201811022019.0
(32) Priority Date :03/09/2018
(33) Name of priority country :China
(86) International Application No :PCT/CN2019/103521
Filing Date :30/08/2019
(87) International Publication No :WO 2020/048390
(61) Patent of Addition to Application Number :NA
Filing Date :NA
(62) Divisional to Application Number :NA
Filing Date :NA

(71)**Name of Applicant :**
1)SAINT-GOBAIN GLASS FRANCE
Address of Applicant :Tour Saint-Gobain 12 place de l'Iris 92400 Courbevoie France
2)TAN, Jun
(72)**Name of Inventor :**
1)TAN, Jun
2)TAN, Jun
3)LABROT, Michael

(57) Abstract :
Provided is an exterior trimming part for a pillar of a vehicle. The exterior trimming part includes: a bracket (1) fixedly connected to the pillar, and a glass cover plate (2) fixedly connected to the bracket (1) and covering an exterior surface of the bracket (1). The bracket (1) has a receiving space (11) opened at least towards the glass cover plate (2). The exterior trimming part further includes an electronic component (31) disposed at the receiving space (11). The exterior trimming part not only has good scratch resistance, but also has intelligent functions.

No. of Pages : 9 No. of Claims : 11

(12) PATENT APPLICATION PUBLICATION
(21) Application No.202017042748 A
(19) INDIA
(22) Date of filing of Application :01/10/2020
(43) Publication Date : 05/03/2021

(54) Title of the invention : DRY COKE FIRE EXTINGUISHING APPARATUS AND METHOD FOR REMOVING COKE DUST IN BOILER OF DRY COKE FIRE EXTINGUISHING APPARATUS

(51) International classification	:C10B0039020000, C10B0043020000, C10G0009160000, H02B0001280000, C10B0043000000
(31) Priority Document No	:2018-171388
(32) Priority Date	:13/09/2018
(33) Name of priority country	:Japan
(86) International Application No	:PCT/JP2019/033281
Filing Date	:26/08/2019
(87) International Publication No	:WO 2020/054375
(61) Patent of Addition to Application Number	:NA
Filing Date	:NA
(62) Divisional to Application Number	:NA
Filing Date	:NA

(71)**Name of Applicant :**
1)NIPPON STEEL ENGINEERING CO., LTD.
Address of Applicant :5-1 Osaki 1-chome, Shinagawa-ku, Tokyo 1418604 Japan
2)NIPPON STEEL PLANT DESIGNING CORPORATION
3)BEIJING JC ENERGY & ENVIRONMENT ENGINEERING CO., LTD.
(72)**Name of Inventor :**
1)KISHIMOTO, Kohei
2)TASHIMA, Seitaro
3)AOKI, Narumi
4)ANAN, Tetsuji
5)EGUCHI, Kazuya

(57) Abstract :
Provided are: a dry coke fire extinguishing apparatus that can remove accumulated coke dust that has adhered in a boiler; and a method for removing coke dust in the boiler of the dry coke fire extinguishing apparatus. A dry coke fire extinguishing apparatus 100 comprises a chamber 10, a dust collector 20 that comprises a cyclone, a boiler 30, a first duct 40 that links the chamber 10 and the cyclone 20, a second duct 50 that links the cyclone 20 and the boiler 30, and a third duct 60 that links the boiler 30 and the chamber 10, wherein coke dust captured by the dust collector 20 is supplied to the boiler 30 as removal dust for removing coke dust that has accumulated in the boiler 30.

No. of Pages : 34 No. of Claims : 10

(12) PATENT APPLICATION PUBLICATION
(19) INDIA
(22) Date of filing of Application :20/10/2020
(21) Application No.202017045694 A
(43) Publication Date : 05/03/2021

(54) Title of the invention : STATOR ASSEMBLY, MOTOR HAVING SAME AND WIND POWER GENERATOR SET

(51) International classification	:H02K0009060000, F04D0025080000, H02K0001200000, H02K0003280000, H02K0003120000
(31) Priority Document No	:201811076191.4
(32) Priority Date	:14/09/2018
(33) Name of priority country	:China
(86) International Application No	:PCT/CN2019/104142
Filing Date	:03/09/2019
(87) International Publication No	:WO 2020/052467
(61) Patent of Addition to Application Number	:NA
Filing Date	:NA
(62) Divisional to Application Number	:NA
Filing Date	:NA

(71)**Name of Applicant :**
1)BEIJING GOLDWIND SCIENCE & CREATION WINDPOWER EQUIPMENT CO., LTD.
Address of Applicant :No. 19, Kangding Road Beijing Economic & Technological Development Zone, Daxing District, Beijing 100176 China
(72)**Name of Inventor :**
1)MA, Shengjun

(57) Abstract :
The present disclosure relates to a stator assembly, a motor having same, and a wind power generator set. The stator assembly comprises a stator iron core, a stator bracket supporting the stator iron core, and an air flow conveyer configured to convey a first cold air flow along the radial direction of the stator iron core to a radial side surface of the stator iron core opposite to an air gap side. The embodiment of the present disclosure enables the cooling of the other side of the stator opposite to the air gap during the operation of the motor, so that two radial sides of the stator are cooled at the same time. Thereby, the expansion and deformation of the stator iron core are reduced, the air gap is prevented from being narrowed, magnetic poles are protected from being baked by the high temperature of the stator, and the service life of the motor is prolonged.

No. of Pages : 19 No. of Claims : 20

(12) PATENT APPLICATION PUBLICATION
(21) Application No.202017046073 A
(19) INDIA
(22) Date of filing of Application :22/10/2020
(43) Publication Date : 05/03/2021

(54) Title of the invention : STATOR ASSEMBLY, ELECTRICAL MOTOR, WIND POWER GENERATOR SET AND METHOD FOR COOLING STATOR ASSEMBLY

(51) International classification	:H02K0001180000, H02K0001200000, H02K0009040000, F03D0080600000, H02K0015020000
(31) Priority Document No	:201811074884.X
(32) Priority Date	:14/09/2018
(33) Name of priority country	:China
(86) International Application No	:PCT/CN2019/104153
Filing Date	:03/09/2019
(87) International Publication No	:WO 2020/052470
(61) Patent of Addition to Application Number	:NA
Filing Date	:NA
(62) Divisional to Application Number	:NA
Filing Date	:NA

(71)**Name of Applicant :**
1)BEIJING GOLDWIND SCIENCE & CREATION WINDPOWER EQUIPMENT CO., LTD.
Address of Applicant :No.19, Kangding Road Beijing Economic & Technological Development Zone, Daxing District Beijing 100176 China
(72)**Name of Inventor :**
1)MA, Shengjun

(57) Abstract :
Disclosed are a stator assembly, an electrical motor having the stator assembly, a wind power generator set and a method for cooling a stator assembly. The stator assembly comprises a stator support (200) and a stator core (100) mounted on the stator support, wherein the stator support (200) comprises a support enclosure plate (220), a first axial air flow channel is formed between the support enclosure plate (220) of the stator support (200) and a radial side surface of the stator core (100), and the first axial air flow channel is used for receiving a first cold air flow, so that the cold air flow can flow in the axial direction. The stator assembly can introduce a cold air flow from the other side, opposite an air gap, of a stator during the operation of an electrical motor, so that two radial sides of the stator can be cooled at the same time, thereby reducing the expansion and deformation of the stator core, preventing narrowing of the air gap, preventing a magnetic pole from being subjected to high-temperature baking by the stator to protect the magnetic pole, and prolonging the service life of the electrical motor.

No. of Pages : 18 No. of Claims : 20

(12) PATENT APPLICATION PUBLICATION
(21) Application No.202017048245 A
(19) INDIA
(22) Date of filing of Application :04/11/2020
(43) Publication Date : 05/03/2021

(54) Title of the invention : METHOD AND APPARATUS FOR INTRA PREDICTION

(51) International classification	:H04N0019110000, H04N0019593000, H04N0019176000, H04N0019159000, H04N0019700000
(31) Priority Document No	:62/726419
(32) Priority Date	:03/09/2018
(33) Name of priority country	:U.S.A.
(86) International Application No	:PCT/CN2019/104254
Filing Date	:03/09/2019
(87) International Publication No	:WO 2020/048463
(61) Patent of Addition to Application Number	:NA
Filing Date	:NA
(62) Divisional to Application Number	:NA
Filing Date	:NA

(71)**Name of Applicant :**
1)HUAWEI TECHNOLOGIES CO., LTD.
Address of Applicant :Huawei Administration Building Bantian, Longgang District Shenzhen, Guangdong 518129 China
(72)**Name of Inventor :**
1)WANG, Biao
2)ESENLIK, Semih
3)KOTRA, Anand Meher
4)GAO, Han
5)CHEN, Jianle
6)ZHAO, Zhijie

(57) Abstract :
A decoding method and a decoder for decoding a current block of a video is provided, wherein the decoding method comprises: obtaining a value of a Most Probable Modes, MPM, flag for the current block from a bitstream; obtaining an MPM index for the current block from the bitstream, when the value of the MPM flag indicates that an intra prediction mode for the current block is an intra prediction mode comprised in an MPM set of intra prediction modes; obtaining a value of an intra prediction mode for the current block, based on the MPM index and the MPM set for the current block; wherein when an intra prediction mode of a left neighboring block of the current block is a Planar mode, and an intra prediction mode of an above neighboring block of the current block is a Planar mode, the MPM set of prediction modes comprises: a Planar mode, a DC mode, a Vertical mode, a Horizontal mode, an intra prediction mode corresponding to the Vertical mode with a first offset, and an intra prediction mode corresponding to the Vertical mode with a second offset.

No. of Pages : 83 No. of Claims : 21

(12) PATENT APPLICATION PUBLICATION
(21) Application No.202017049076 A
(19) INDIA
(22) Date of filing of Application :10/11/2020
(43) Publication Date : 05/03/2021

(54) Title of the invention : METHOD AND APPARATUS FOR PERFORMING DUAL CONNECTIVITY IN HETEROGENEOUS NETWORK

(51) International classification	:H04W0076150000, H04W0088060000, H04W0036000000, H04L0005000000, H04W0012040000	(71)**Name of Applicant :** **1)SAMSUNG ELECTRONICS CO., LTD.** Address of Applicant :129, Samsung-ro, Yeongtong-gu Suwon-si, Gyeonggi-do 16677 Republic of Korea
(31) Priority Document No	:10-2018-0100489	(72)**Name of Inventor :** **1)KIM, Taesung**
(32) Priority Date	:27/08/2018	**2)KIM, Janghwan**
(33) Name of priority country	:Republic of Korea	**3)YOO, Seungbo**
(86) International Application No	:PCT/KR2019/010907	
Filing Date	:27/08/2019	
(87) International Publication No	:WO 2020/045948	
(61) Patent of Addition to Application Number	:NA	
Filing Date	:NA	
(62) Divisional to Application Number	:NA	
Filing Date	:NA	

(57) Abstract :
The present disclosure relates to a communication method and system for converging a 4th-Generation (4G) communication system or a 5th-Generation (5G) communication system for supporting higher data rates beyond the 4th-Generation (4G) system with a technology for Internet of Things (IoT). The present disclosure may be applied to intelligent services based on the 5G communication technology and the IoT-related technology, such as smart home, smart building, smart city, smart car, connected car, health care, digital education, smart retail, security and safety services. A method of a central unit-control plane (CU-CP) included in a secondary node (SN) (or secondary gNB (SgNB)) in a wireless communication system supporting evolved universal terrestrial radio access and new radio dual connectivity (EN-DC) includes receiving, from a master node (MN) (or master eNB (MeNB)), a first message for requesting the SgNB to allocate a radio resource for a bearer, and transmitting a second message, including indication information indicating whether a packet data convergence protocol (PDCP) version of the bearer has been changed, to the CU-UP included in the SgNB. The indication information is generated based on the first message.

No. of Pages : 36 No. of Claims : 15

(12) PATENT APPLICATION PUBLICATION
(19) INDIA
(22) Date of filing of Application :19/11/2020
(21) Application No.202017050382 A
(43) Publication Date : 05/03/2021

(54) Title of the invention : SEPARATION DEVICES, ASSOCIATED METHODS, AND SYSTEMS

(51) International classification	:C12M0001000000, G01N0035000000, B01D0015180000, G01N0030600000, C12Q0001680600
(31) Priority Document No	:16/128121
(32) Priority Date	:11/09/2018
(33) Name of priority country	:U.S.A.
(86) International Application No	:PCT/EP2019/073198
Filing Date	:30/08/2019
(87) International Publication No	:WO 2020/052996
(61) Patent of Addition to Application Number	:NA
Filing Date	:NA
(62) Divisional to Application Number	:NA
Filing Date	:NA

(71)**Name of Applicant :**
1)GLOBAL LIFE SCIENCES SOLUTIONS USA LLC
Address of Applicant :100 Results Way Marlborough, 1752, MA U.S.A.
2)GE HEALTHCARE BIO-SCIENCES AB
(72)**Name of Inventor :**
1)MISNER, Matthew, Jeremiah
2)GETTINGS, Rachel, Marie
3)MORTON, Christine, Angela
4)KVAM, Erik, Leeming
5)CASTLE, Jason, William
6)DE, Anindya, Kanti
7)HALE, Jared, Timothy
8)GALLIGAN, Craig, Patrick
9)PIZZI, Vincent, Francis

(57) Abstract :
A system for isolating a target molecule from a bioprocess fluid includes a single-use disposable separation device (having a plurality of perimeter-bonded layers defining one or more mesofluidic channels of the separation device, wherein each layer includes a biocompatible polymer material, wherein the separation device is configured to separate at least a portion of particles from the bioprocess fluid to generate a substantially clarified bioprocess fluid, and a chromatography system fluidically coupled at the outflow of the separation device in a configuration for further processing the clarified bioprocess fluid.

No. of Pages : 29 No. of Claims : 30

(12) PATENT APPLICATION PUBLICATION
(19) INDIA
(22) Date of filing of Application :11/12/2020
(21) Application No.202017053917 A
(43) Publication Date : 05/03/2021

(54) Title of the invention : COMBINATION METERING ASSEMBLY FOR FILLING LIQUID PRODUCTS INTO CONTAINERS

(51) International classification	:B05B0011000000, F04B0049060000, F04B0051000000, F04B0049220000, A61M0005168000
(31) Priority Document No	:10 2018 215 444.9
(32) Priority Date	:11/09/2018
(33) Name of priority country	:Germany
(86) International Application No	:PCT/EP2019/072962
Filing Date	:28/08/2019
(87) International Publication No	:WO 2020/052978
(61) Patent of Addition to Application Number	:NA
Filing Date	:NA
(62) Divisional to Application Number	:NA
Filing Date	:NA

(71)**Name of Applicant :**
1)BAUSCH + STR–BEL MASCHINENFABRIK ILSHOFEN GMBH + CO. KG
Address of Applicant :Parkstrae 1 74532 Ilshofen Germany
(72)**Name of Inventor :**
1)KLEINHEINZ, Fabian
2)BAUER, Harald

(57) Abstract :
The invention relates to a combination metering assembly for filling liquid products into containers. The invention is characterized by a base unit (1) and pump components (3, 4, 5, 6, 11, 12, 13, 14) of at least two different pump types for a metering operation, wherein the pump components of each pump type can be combined with the base unit in order to form a pump system of the corresponding pump type, and the base unit has connection means (19, 23) for this purpose which are compatible with the connections of the pump components. The combination metering assembly can be adapted to different metering situations with little complexity and has a comparably small space requirement.

No. of Pages : 10 No. of Claims : 12

(12) PATENT APPLICATION PUBLICATION
(21) Application No.202017054290 A
(19) INDIA
(22) Date of filing of Application :14/12/2020
(43) Publication Date : 05/03/2021

(54) Title of the invention : COARSE PARTICLE SOLID NONIONIC SYNTHETIC ASSOCIATIVE THICKENERS FOR PAINT FORMULATIONS AND METHODS FOR PRODUCING THE SAME

(51) International classification	:C08L0059000000, C09D0007430000, C08L0071020000, C08K0005154500, C08G0065337000
(31) Priority Document No	:62/685478
(32) Priority Date	:15/06/2018
(33) Name of priority country	:U.S.A.
(86) International Application No	:PCT/US2019/036923
Filing Date	:13/06/2019
(87) International Publication No	:WO 2019/241487
(61) Patent of Addition to Application Number	:NA
Filing Date	:NA
(62) Divisional to Application Number	:NA
Filing Date	:NA

(71)**Name of Applicant :**
1)HERCULES LLC
Address of Applicant :500 Hercules Road Wilmington, Delaware 19808 U.S.A.
(72)**Name of Inventor :**
1)VAYNBERG K., Abraham

(57) Abstract :
The present disclosure relates generally to a particulate product. The particulate product comprises coarse particles of a nonionic synthetic associative thickener (NSAT) rheology modifier. The NSAT rheology modifier is selected from the group consisting of hydrophobically-modified ethoxylated urethane (HEUR), hydrophobically-modified polyacetal-polyether (HMPAPE), and combinations thereof. The particulate product is incorporated into a waterborne paint formula.

No. of Pages : 22 No. of Claims : 29

(12) PATENT APPLICATION PUBLICATION
(19) INDIA
(22) Date of filing of Application :14/12/2020
(21) Application No.202017054292 A
(43) Publication Date : 05/03/2021

(54) Title of the invention : A CIRCUIT AND DEVICE INCLUDING A TRANSISTOR AND DIODE

(51) International classification	:H03K0017567000, H03K0019082000, H01L0029732000, H03K0017740000, H03K0019086000
(31) Priority Document No	:1808840.1
(32) Priority Date	:30/05/2018
(33) Name of priority country	:U.K.
(86) International Application No	:PCT/GB2019/051465
Filing Date	:29/05/2019
(87) International Publication No	:WO 2019/229432
(61) Patent of Addition to Application Number	:NA
Filing Date	:NA
(62) Divisional to Application Number	:NA
Filing Date	:NA

(71)**Name of Applicant :**
1)SEARCH FOR THE NEXT LTD
Address of Applicant :University Of Nottingham Innovation Park Ingenuity Centre Triumph Road Nottingham NG7 2TU U.K.
(72)**Name of Inventor :**
1)SUMMERLAND, David
2)LIGHT, Roger
3)KNIGHT, Luke

(57) Abstract :
A Circuit and Device Including a Transistor and Diode An inverter logic circuit comprised from a bipolar junction transistor and a zener diode. The zener diode connected between the base of the transistor and ground (or other reference voltage). The zener is reverse biased such that a leakage current through the diode allows for sufficient current through the emitter-base terminals of the transistorwhen a voltage is applied across the emitter and base terminals of the transistor to turn the transistor on in the absence of an external signal to the base. As such the transistor functions as a normally on transistor.

No. of Pages : 13 No. of Claims : 21

(12) PATENT APPLICATION PUBLICATION
(19) INDIA
(22) Date of filing of Application :14/12/2020
(21) Application No.202017054295 A
(43) Publication Date : 05/03/2021

(54) Title of the invention : ELECTRONIC DEVICE INCLUDING STRUCTURE FOR PROTECTING DISPLAY DRIVER FROM STATIC ELECTRICITY

(51) International classification	:H05K0009000000, G09G0003200000, H01L0051000000, G06F0003041000, B32B0015080000
(31) Priority Document No	:10-2018-0084495
(32) Priority Date	:20/07/2018
(33) Name of priority country	:Republic of Korea
(86) International Application No	:PCT/KR2019/007327
Filing Date	:18/06/2019
(87) International Publication No	:WO 2020/017766
(61) Patent of Addition to Application Number	:NA
Filing Date	:NA
(62) Divisional to Application Number	:NA
Filing Date	:NA

(71)**Name of Applicant :**
1)SAMSUNG ELECTRONICS CO., LTD.
Address of Applicant :129, Samsung-ro, Yeongtong-gu Suwon-si Gyeonggi-do 16677 Republic of Korea
(72)**Name of Inventor :**
1)PARK, Hyunjun
2)KIM, Seonghoon
3)LEE, Hongkook
4)KIM, Donghwy
5)BAE, Jongkon
6)HAN, Dongkyoon

(57) Abstract :
An electronic device is provided. The electronic device includes a display panel, a metal layer disposed on a surface of the display panel, a display driver integrated circuit (DDI) disposed on a surface of the metal layer, a bending part connecting the display panel to the DDI, and a cover member connected to the metal layer while covering the DDI. The cover member includes at least one conductive layer. The metal layer and the cover member form a space in which the DDI is disposed, and the bending part is connected to the DDI via a connection part in the space.

No. of Pages : 31 No. of Claims : 15

(12) PATENT APPLICATION PUBLICATION
(21) Application No.202017054299 A
(19) INDIA
(22) Date of filing of Application :14/12/2020
(43) Publication Date : 05/03/2021

(54) Title of the invention : COMPOUNDS FOR TREATMENT OF TRIPLE NEGATIVE BREAST CANCER AND OVARIAN CANCER

(51) International classification	:A61K0031427000, A61K0039395000, C07D0233840000, A61K0039155000, C07D0211160000
(31) Priority Document No	:62/671824
(32) Priority Date	:15/05/2018
(33) Name of priority country	:U.S.A.
(86) International Application No	:PCT/US2019/032468
Filing Date	:15/05/2019
(87) International Publication No	:WO 2019/222385
(61) Patent of Addition to Application Number	:NA
Filing Date	:NA
(62) Divisional to Application Number	:NA
Filing Date	:NA

(71)**Name of Applicant :**
1)UNIVERSITY OF TENNESSEE RESEARCH FOUNDATION
Address of Applicant :UT Conference Center, Suite 211 600 Henley Street Knoxville, Tennessee 37996-4122 U.S.A.
2)VERU INC
(72)**Name of Inventor :**
1)LI, Wei
2)MILLER, Duane D
3)DENG, Shanshan
4)KRUTILINA, Raya
5)SEAGROVES, Tiffany
6)YUE, Junming
7)ZHAO, Guannan
8)QINGHUI, Wang
9)STEINER, Mitchell S.

(57) Abstract :
The present invention encompasses methods of treating triple negative breast cancer and/or ovarian cancer using therapeutically effective amounts of compounds represented by the structure of formula I.

No. of Pages : 117 No. of Claims : 11

(12) PATENT APPLICATION PUBLICATION
(19) INDIA
(22) Date of filing of Application :14/12/2020
(21) Application No.202017054300 A
(43) Publication Date : 05/03/2021

(54) Title of the invention : PANTS-TYPE ABSORBENT ARTICLE

(51) International classification	:A61F0013496000, A61F0013490000, A61F0013510000, F04C0023000000, A61F0013150000
(31) Priority Document No	:2018-124407
(32) Priority Date	:29/06/2018
(33) Name of priority country	:Japan
(86) International Application No	:PCT/JP2019/024136
Filing Date	:18/06/2019
(87) International Publication No	:WO 2020/004152
(61) Patent of Addition to Application Number	:NA
Filing Date	:NA
(62) Divisional to Application Number	:NA
Filing Date	:NA

(71)**Name of Applicant :**
1)UNICHARM CORPORATION
Address of Applicant :182, Shimobun, Kinsei-cho, Shikokuchuo-City, Ehime 7990111 Japan
(72)**Name of Inventor :**
1)HASHIMOTO, Tatsuya
2)KATSURAGAWA, Kunihiko
3)NAGATOMO, Shoki

(57) Abstract :
Torso portions (20, 30) of a pants-type absorbent article (1) have, in regions above an absorbent body (10), air holes (41) that pass through the sheets of the torso portions (20, 30). At least a portion of an air hole region (40) in which the air holes (41) are arranged overlaps the absorbent body (10) in a left-right direction. The length in the up-down direction from the lower end of the air hole region (40) of the torso portion (20) on the front side in the front-back direction to the upper end of the front side of the absorbent body (10) is different from the length in the up-down direction from the lower end of the air hole region (40) of the torso portion (30) on the back side to the upper end of the back side of the absorbent body (10).

No. of Pages : 31 No. of Claims : 16

(12) PATENT APPLICATION PUBLICATION
(19) INDIA
(22) Date of filing of Application :14/12/2020
(21) Application No.202017054308 A
(43) Publication Date : 05/03/2021

(54) Title of the invention : PRESSURE SENSOR DEVICE FORMED IN BOARD AND ELECTRONIC DEVICE INCLUDING THE SAME

(51) International classification	:G06F0003045000, G01L0001220000, G06F0003041000, A61B0005021000, H01L0027140000
(31) Priority Document No	:10-2018-0079942
(32) Priority Date	:10/07/2018
(33) Name of priority country	:Republic of Korea
(86) International Application No	:PCT/KR2019/008488
Filing Date	:10/07/2019
(87) International Publication No	:WO 2020/013598
(61) Patent of Addition to Application Number	:NA
Filing Date	:NA
(62) Divisional to Application Number	:NA
Filing Date	:NA

(71)**Name of Applicant :**
1)SAMSUNG ELECTRONICS CO., LTD.
Address of Applicant :129, Samsung-ro, Yeongtong-gu Suwon-si, Gyeonggi-do 16677 Republic of Korea
(72)**Name of Inventor :**
1)SIM, Hyunwoo
2)KIM, Seongjun
3)KIM, Yonghwa
4)SON, Dongil
5)LIM, Jaedeok
6)CHOI, Seungbum

(57) Abstract :
An electronic device for detecting pressure is provided. The electronic device includes a printed circuit board (PCB) including at least one element or circuit pattern for driving the electronic device, at least one electrode pattern formed to detect a pressure in the wiring layer included in the PCB, an elastic member arranged to be at least partially overlapped with the electrode pattern, and a pressure sensor circuit electrically connected to the electrode pattern included in the PCB. The pressure sensor circuit is configured to apply a voltage to the electrode pattern and measure intensity of the pressure based on a change in the voltage applied to the electrode pattern.

No. of Pages : 27 No. of Claims : 15

(12) PATENT APPLICATION PUBLICATION
(21) Application No.202017054314 A
(19) INDIA
(22) Date of filing of Application :14/12/2020
(43) Publication Date : 05/03/2021

(54) Title of the invention : METHODS FOR MITIGATING DRUG TARGET INTERFERENCE IN AN ANTI-DRUG ANTIBODY (ADA) IMMUNOASSAY

(51) International classification	:G01N0033680000, G01N0033530000, G01N0033940000, G01N0033577000, C07K0016420000
(31) Priority Document No	:62/696016
(32) Priority Date	:10/07/2018
(33) Name of priority country	:U.S.A.
(86) International Application No	:PCT/US2019/040950
Filing Date	:09/07/2019
(87) International Publication No	:WO 2020/014194
(61) Patent of Addition to Application Number	:NA
Filing Date	:NA
(62) Divisional to Application Number	:NA
Filing Date	:NA

(71)**Name of Applicant :**
1)REGENERON PHARMACEUTICALS, INC.
Address of Applicant :777 Old Saw Mill River Road Tarrytown, NY 10591 U.S.A.
(72)**Name of Inventor :**
1)OLIVEIRA SUMNER, Giane
2)CHEN, Jihua

(57) Abstract :
The present disclosure provides methods for mitigating drug target interference in an anti-drug antibody (ADA) immunoassay, wherein the ADA immunoassay comprises one or more target blocking reagents under mild basic pH assay conditions.

No. of Pages : 33 No. of Claims : 30

(12) PATENT APPLICATION PUBLICATION
(19) INDIA
(22) Date of filing of Application :14/12/2020
(21) Application No.202017054315 A
(43) Publication Date : 05/03/2021

(54) Title of the invention : ADJUSTABLE WHITE LIGHT ILLUMINATION DEVICES

(51) International classification	:H01L0033500000, H05B0045200000, F21K0009640000, F21V0009300000, F21S0010000000
(31) Priority Document No	:62/677405
(32) Priority Date	:29/05/2018
(33) Name of priority country	:U.S.A.
(86) International Application No	:PCT/IB2019/000630
Filing Date	:29/05/2019
(87) International Publication No	:WO 2019/229529
(61) Patent of Addition to Application Number	:NA
Filing Date	:NA
(62) Divisional to Application Number	:NA
Filing Date	:NA

(71)**Name of Applicant :**
1)JUGANU LTD.
Address of Applicant :16 Hamelacha St. 4809139 Rosh Haain Israel
(72)**Name of Inventor :**
1)MEIR, Noam

(57) Abstract :
A lighting device producing white light having a target color correlated temperature (CCT) value includes an LED array having one or more red LEDs, one or more warm white LEDs, and one or more cool white LED; one or more photo-luminescent materials for shifting the CCT value of the light emitted from the cool white LED toward a green CCT value and/or the CCT value of the light emitted from the warm white LED toward a yellow CCT value; and a waveguide material having a mixing region for mixing the shifted and unshifted light so as to generate white light having the target CCT value and an output region for outputting the white light.

No. of Pages : 16 No. of Claims : 17

(12) PATENT APPLICATION PUBLICATION
(21) Application No.202017054316 A
(19) INDIA
(22) Date of filing of Application :14/12/2020
(43) Publication Date : 05/03/2021

(54) Title of the invention : SINTERED BODY AND ALUMINA-DOPED PARTIALLY STABILIZED ZIRCONIA

(51) International classification	:B23B0027140000, C04B0035583100, C04B0035488000, C04B0035580000, B82Y0030000000	(71)**Name of Applicant :** **1)SUMITOMO ELECTRIC INDUSTRIES, LTD.** Address of Applicant :5-33, Kitahama 4-chome, Chuo-ku, Osaka-shi, Osaka 5410041 Japan **2)SUMITOMO ELECTRIC HARDMETAL CORP.**
(31) Priority Document No	:2018-115483	(72)**Name of Inventor :**
(32) Priority Date	:18/06/2018	**1)HAMA, Hisaya**
(33) Name of priority country	:Japan	**2)OKAMURA, Katsumi**
(86) International Application No	:PCT/JP2019/006759	**3)AMEMIYA, Mayu**
Filing Date	:22/02/2019	**4)KUKINO, Satoru**
(87) International Publication No	:WO 2019/244398	
(61) Patent of Addition to Application Number	:NA	
Filing Date	:NA	
(62) Divisional to Application Number	:NA	
Filing Date	:NA	

(57) Abstract :
A sintered body containing a first material that is partially stabilized ZrO2 in which cubic boron nitride and Al2O3 are dispersed on a crystal grain boundary and/or in a crystal grain, the sintered body containing the cubic boron nitride in an amount of 20 to 80 vol% inclusive, wherein nitrogen is contained in an amount of 0.001% to 1% by mass inclusive in the first material when the first material is measured by secondary ion mass spectrometry.

No. of Pages : 28 No. of Claims : 6

(12) PATENT APPLICATION PUBLICATION
(19) INDIA
(22) Date of filing of Application :14/12/2020
(21) Application No.202017054317 A
(43) Publication Date : 05/03/2021

(54) Title of the invention : MULTI-DIMENSIONAL BOGIE AND TRACK SYSTEM

(51) International classification	:B61B0013000000, A63G0007000000, A63G0031160000, E01B0007000000, B61B0015000000
(31) Priority Document No	:62/689588
(32) Priority Date	:25/06/2018
(33) Name of priority country	:U.S.A.
(86) International Application No	:PCT/US2019/035865
Filing Date	:06/06/2019
(87) International Publication No	:WO 2020/005497
(61) Patent of Addition to Application Number	:NA
Filing Date	:NA
(62) Divisional to Application Number	:NA
Filing Date	:NA

(71)**Name of Applicant :**
1)UNIVERSAL CITY STUDIOS LLC
Address of Applicant :100 Universal City Plaza Universal City, California 91608 U.S.A.
(72)**Name of Inventor :**
1)MCVEEN, Keith Michael
2)PARR, Eric Rae

(57) Abstract :
A system includes a plurality of rotatable track members that guide travel of a vehicle. Each rotatable track member of the plurality of rotatable track members is configured to individually rotate between a first orientation along a first direction of vehicle travel and a second orientation along a second direction of vehicle travel.

No. of Pages : 25 No. of Claims : 20

(12) PATENT APPLICATION PUBLICATION
(19) INDIA
(22) Date of filing of Application :14/12/2020
(21) Application No.202017054319 A
(43) Publication Date : 05/03/2021

(54) Title of the invention : SINTERED BODY AND CUTTING TOOL INCLUDING SAME

(51) International classification	:C04B0035583100, B23B0027140000, C04B0035622000, C04B0035645000, C04B0035626000
(31) Priority Document No	:2018-115481
(32) Priority Date	:18/06/2018
(33) Name of priority country	:Japan
(86) International Application No	:PCT/JP2019/008309
Filing Date	:04/03/2019
(87) International Publication No	:WO 2019/244414
(61) Patent of Addition to Application Number	:NA
Filing Date	:NA
(62) Divisional to Application Number	:NA
Filing Date	:NA

(71)**Name of Applicant :**
1)SUMITOMO ELECTRIC INDUSTRIES, LTD.
Address of Applicant :5-33, Kitahama 4-chome, Chuo-ku, Osaka-shi, Osaka 5410041 Japan
2)SUMITOMO ELECTRIC HARDMETAL CORP.
(72)**Name of Inventor :**
1)OKAMURA, Katsumi
2)HAMA, Hisaya
3)AMEMIYA, Mayu
4)KUKINO, Satoru

(57) Abstract :
This sintered body includes: a cubic boron nitride; a zirconium-containing oxide; a zirconium-containing nitride; and an aluminum-containing oxide, wherein the zirconium-containing nitride includes either or both of ZrN and ZrON, and the aluminum-containing oxide includes a-type Al2O3.

No. of Pages : 28 No. of Claims : 5

(12) PATENT APPLICATION PUBLICATION
(21) Application No.202017054320 A
(19) INDIA
(22) Date of filing of Application :14/12/2020
(43) Publication Date : 05/03/2021

(54) Title of the invention : SYSTEM FOR PERFORMING SERVICE BY USING BIOMETRIC INFORMATION, AND CONTROL METHOD THEREFOR

(51) International classification	:G06F0021320000, H04L0029060000, G06F0021620000, H04L0009080000, G06F0021600000
(31) Priority Document No	:10-2018-0062943
(32) Priority Date	:31/05/2018
(33) Name of priority country	:Republic of Korea
(86) International Application No	:PCT/KR2019/005729
Filing Date	:13/05/2019
(87) International Publication No	:WO 2019/231140
(61) Patent of Addition to Application Number	:NA
Filing Date	:NA
(62) Divisional to Application Number	:NA
Filing Date	:NA

(71)**Name of Applicant :**
1)SAMSUNG ELECTRONICS CO., LTD.
Address of Applicant :129, Samsung-ro, Yeongtong-gu Suwon-si Gyeonggi-do 16677 Republic of Korea
(72)**Name of Inventor :**
1)KIM, Jinsu
2)SHIN, Junbum
3)KIM, Sungwook

(57) Abstract :
A system for performing a service by using biometric information is disclosed. A system according to the present disclosure comprises an electronic device, a first server and a second server, and a control method of the system comprises the steps of: allowing the electronic device to acquire first biometric information; allowing the electronic device to acquire first encrypted data, in which the first biometric information is encrypted, by using the acquired first biometric information and a first encryption key, and to transmit same to the first server; allowing the first server to acquire second encrypted data, in which the first encrypted data is encrypted, by using the first encrypted data received from the electronic device and a second encryption key, and first user identification information corresponding to the first biometric information, and to transmit same to the second server; allowing the second server to match the second encrypted data and the first user identification information corresponding to the biometric information, which are received from the first server, and to store same; allowing the second server to acquire authentication information on the basis of the matched second encrypted data and first user identification information, and to transmit same to the first server; and allowing the first server to register the authentication information on the biometric information.

No. of Pages : 45 No. of Claims : 15

(12) PATENT APPLICATION PUBLICATION
(19) INDIA
(22) Date of filing of Application :14/12/2020
(21) Application No.202017054321 A
(43) Publication Date : 05/03/2021

(54) Title of the invention : ELECTRONIC DEVICE AND METHOD OF CONTROLLING ELECTRONIC DEVICE

(51) International classification	:H04M0019040000, G08B0006000000, G08B0005220000, H04B0001382700, G06F0001160000
(31) Priority Document No	:10-2018-0056557
(32) Priority Date	:17/05/2018
(33) Name of priority country	:Republic of Korea
(86) International Application No	:PCT/KR2019/005958
Filing Date	:17/05/2019
(87) International Publication No	:WO 2019/221562
(61) Patent of Addition to Application Number	:NA
Filing Date	:NA
(62) Divisional to Application Number	:NA
Filing Date	:NA

(71)**Name of Applicant :**
1)SAMSUNG ELECTRONICS CO., LTD.
Address of Applicant :129, Samsung-ro, Yeongtong-gu Suwon-si Gyeonggi-do 16677 Republic of Korea
(72)**Name of Inventor :**
1)KIM, Kyungdong
2)LEE, Cholwoo
3)JANG, Wooseok
4)JANG, Dongho

(57) Abstract :
An electronic device for changing a notification mode and a method therefor are provided. The electronic device includes communication circuitry, at least one processor, and a memory. The memory stores instructions, when executed, configured to cause the at least one processor to establish communication with a wearable device through the communication circuitry, and upon identifying a change in an operation state of the wearable device, change from a first notification mode of the electronic device to a second notification mode according to the identified operation state of the wearable device.

No. of Pages : 34 No. of Claims : 15

(12) PATENT APPLICATION PUBLICATION
(19) INDIA
(22) Date of filing of Application :14/12/2020
(21) Application No.202017054327 A
(43) Publication Date : 05/03/2021

(54) Title of the invention : MUTANT CPF1 ENDONUCLEASES

(51) International classification	:C12N0009220000, C07K0014515000, C12Q0001688300, A61K0038500000, C12N0015690000	(71)**Name of Applicant :** **1)UNIVERSITY OF COPENHAGEN** Address of Applicant :N¸rregade 10 1165 Copenhagen K Denmark (72)**Name of Inventor :** **1)STELLA, Stefano** **2)MONTOYA, Guillermo**
(31) Priority Document No	:18175707.1	
(32) Priority Date	:04/06/2018	
(33) Name of priority country	:EPO	
(86) International Application No	:PCT/EP2019/064444	
Filing Date	:04/06/2019	
(87) International Publication No	:WO 2019/233990	
(61) Patent of Addition to Application Number	:NA	
Filing Date	:NA	
(62) Divisional to Application Number	:NA	
Filing Date	:NA	

(57) Abstract :
The present invention relates to mutant Cpf1 endonucleases having altered activity compared to the wild type Cpf1, and their use to introduce single strand breaks in nucleic acid sequences. Methods for detection and quantification of a nucleic acid sequence are also disclosed. Methods for diagnosis of an infectious disease are also disclosed.

No. of Pages : 95 No. of Claims : 114

(12) PATENT APPLICATION PUBLICATION
(19) INDIA
(22) Date of filing of Application :14/12/2020
(21) Application No.202017054331 A
(43) Publication Date : 05/03/2021

(54) Title of the invention : TREATED TITANIUM DIOXIDE PIGMENT, PROCESS OF MAKING THEREOF AND USE THEREOF IN PAPER MANUFACTURE

(51) International classification	:C09C0001360000, D21H0017690000, D21H0017670000, C09C0003060000, C30B0019120000
(31) Priority Document No	:62/686829
(32) Priority Date	:19/06/2018
(33) Name of priority country	:U.S.A.
(86) International Application No	:PCT/US2019/037917
Filing Date	:19/06/2019
(87) International Publication No	:WO 2019/246209
(61) Patent of Addition to Application Number	:NA
Filing Date	:NA
(62) Divisional to Application Number	:NA
Filing Date	:NA

(71)**Name of Applicant :**
1)TRONOX LLC
Address of Applicant :3301 NW 150th Street Oklahoma City, OK 73134 U.S.A.
(72)**Name of Inventor :**
1)MCINTYRE, Robert
2)KERROD, Julie Elizabeth
3)WEBBER, Ben
4)BURNISTON, Neil

(57) Abstract :
Process for the surface treatment of a titanium dioxide pigment, characterized in that it comprises the following steps: an aqueous suspension of titanium dioxide pigments is formed, in a first step, a layer of alumina phosphate is precipitated on the surface of the pigment, in a second step, a layer of alumina is precipitated over the first layer of alumina phosphate, and in an optional third step, a layer of magnesium oxide is precipitated on the layer of alumina. Titanium dioxide pigments made by the disclosed process and method using said pigments in paper manufacturing are also disclosed.

No. of Pages : 25 No. of Claims : 12

(12) PATENT APPLICATION PUBLICATION
(21) Application No.202017054336 A
(19) INDIA
(22) Date of filing of Application :14/12/2020
(43) Publication Date : 05/03/2021

(54) Title of the invention : INFORMATION PROCESSING DEVICE, INFORMATION PROCESSING METHOD, AND COMPUTER PROGRAM

(51) International classification	:A61B0006000000, G06T0007000000, A61B0006040000, A61B0008080000, A61M0001060000
(31) Priority Document No	:2018-098989
(32) Priority Date	:23/05/2018
(33) Name of priority country	:Japan
(86) International Application No	:PCT/JP2019/006364
Filing Date	:20/02/2019
(87) International Publication No	:WO 2019/225084
(61) Patent of Addition to Application Number	:NA
Filing Date	:NA
(62) Divisional to Application Number	:NA
Filing Date	:NA

(71)**Name of Applicant :**
1)EIZO CORPORATION
Address of Applicant :153 Shimokashiwano-machi, Hakusan-shi, Ishikawa 9248566 Japan
(72)**Name of Inventor :**
1)KATO, Yu
2)HIGASHI, Masafumi
3)AOKI, Reo
4)OGAKI, Mamoru
5)ARAI, Ikumi
6)HASHIMOTO, Noriyuki
7)HIRATA, Naoaki

(57) Abstract :
Provided is an information processing device capable of providing information allowing for an appropriate decision as to whether or not an inspection by ultrasound is needed, even if a high-density mammary gland region is present in a narrow region. [Solution] The present invention provides the information processing device comprising a mammary gland region extraction unit, a mammary gland pixel detection unit, and a mammary gland density calculation unit, wherein the mammary gland region extraction unit extracts a mammary gland region in a mammography image, the mammary gland pixel detection unit detects mammary gland pixels within the mammary gland region, the mammary gland density calculation unit calculates the mammary gland density on the basis of the proportion of the mammary gland pixels relative to the mammary gland region, the mammary gland region being a narrower region than the entirety of the breast included in the mammography image.

No. of Pages : 30 No. of Claims : 20

(12) PATENT APPLICATION PUBLICATION
(19) INDIA
(22) Date of filing of Application :14/12/2020
(21) Application No.202017054337 A
(43) Publication Date : 05/03/2021

(54) Title of the invention : A DRAW OUT MECHANISM FOR ELECTRICAL PANELS

(51) International classification	:H05K0005020000, F16C0013000000, F16P0003080000, H02B0001280000, B66B0007040000
(31) Priority Document No	:NA
(32) Priority Date	:NA
(33) Name of priority country	:NA
(86) International Application No	:PCT/IB2018/053504
Filing Date	:18/05/2018
(87) International Publication No	:WO 2019/220183
(61) Patent of Addition to Application Number	:NA
Filing Date	:NA
(62) Divisional to Application Number	:NA
Filing Date	:NA

(71)**Name of Applicant :**
1)KAHATAPITIYA, Lalith
Address of Applicant :K.I.K Lanka (Pvt) Ltd, Spur Road, Phase 1, Export Processing Zone Katunayake Sri Lanka
2)KAHATAPITIYA, Nadie
(72)**Name of Inventor :**
1)KAHATAPITIYA, Lalith
2)KAHATAPITIYA, Nadie

(57) Abstract :
This invention is an operational mechanism for draw out mechanisms for electrical panels (movable unit) into and from the fixed unit for the purposes of inserting and withdrawal of the movable unit whilst facilitating the engagement and disengagement of electrical power and control circuits characterized by; (i) a hinged door, two arms referred to as Arm I and Arm II, wheel/roller and an opening made in the side casing plate of the movable unit named 'curved or anchor slot'; and (ii) a safety latch, two components named 'wheel / roller guide 1 and 2' permanently attached to the side cover of the fixed unit.

No. of Pages : 11 No. of Claims : 5

(12) PATENT APPLICATION PUBLICATION
(19) INDIA
(22) Date of filing of Application :14/12/2020
(21) Application No.202017054343 A
(43) Publication Date : 05/03/2021

(54) Title of the invention : LOW LATENCY SYNCHRONIZATION FOR OPERATION CACHE AND INSTRUCTION CACHE FETCHING AND DECODING INSTRUCTIONS

(51) International classification	:G06F0009380000, G06F0012087500, G06F0009300000, G06F0012104500, G06F0012089500
(31) Priority Document No	:16/014715
(32) Priority Date	:21/06/2018
(33) Name of priority country	:U.S.A.
(86) International Application No	:PCT/US2019/032540
Filing Date	:15/05/2019
(87) International Publication No	:WO 2019/245677
(61) Patent of Addition to Application Number	:NA
Filing Date	:NA
(62) Divisional to Application Number	:NA
Filing Date	:NA

(71)**Name of Applicant :**
1)ADVANCED MICRO DEVICES, INC.
Address of Applicant :2485 Augustine Drive Santa Clara, California 95054 U.S.A.
(72)**Name of Inventor :**
1)EVERS, Marius
2)TAVARE, Dhanaraj Bapurao
3)VENKATACHAR, Ashok Tirupathy
4)ANNAMALAI, Arunachalam
5)PRIORE, Donald A.
6)WILLIAMS, Douglas R.

(57) Abstract :
The techniques described herein provide an instruction fetch and decode unit having an operation cache with low latency in switching between fetching decoded operations from the operation cache and fetching and decoding instructions using a decode unit. This low latency is accomplished through a synchronization mechanism that allows work to flow through both the operation cache path and the instruction cache path until that work is stopped due to needing to wait on output from the opposite path. The existence of decoupling buffers in the operation cache path and the instruction cache path allows work to be held until that work is cleared to proceed. Other improvements, such as a specially configured operation cache tag array that allows for detection of multiple hits in a single cycle, also improve latency by, for example, improving the speed at which entries are consumed from a prediction queue that stores predicted address blocks.

No. of Pages : 28 No. of Claims : 20

(12) PATENT APPLICATION PUBLICATION
(19) INDIA
(22) Date of filing of Application :14/12/2020

(21) Application No.202017054351 A
(43) Publication Date : 05/03/2021

(54) Title of the invention : NIR-REFLECTIVE MULTI-LAYER MATERIAL SHEET

(51) International classification	:H01L0031049000, H01L0031048000, B32B0027360000, B32B0027320000, B32B0027080000
(31) Priority Document No	:18182789.0
(32) Priority Date	:10/07/2018
(33) Name of priority country	:EPO
(86) International Application No	:PCT/EP2019/068249
Filing Date	:08/07/2019
(87) International Publication No	:WO 2020/011709
(61) Patent of Addition to Application Number	:NA
Filing Date	:NA
(62) Divisional to Application Number	:NA
Filing Date	:NA

(71)**Name of Applicant :**
1)DSM IP ASSETS B.V.
Address of Applicant :Het Overloon 1 6411 TE HEERLEN Netherlands
(72)**Name of Inventor :**
1)LAUW, Yansen
2)PASMANS, Peter, Leonardus, Elisabeth, Maria
3)JANSSEN, Mark, Martinus, Maria
4)VAN DURME, Kurt

(57) Abstract :
The present invention relates to a multi-layer material sheet comprising an NIR-reflective, translucent polymeric layer having a reflectance of more than 20% of all light with a wavelength from 750 nm to 1000 nm and a transmission of more than 50% of all light with a wavelength from 380 nm to 750 nm and an NIR-reflective, colored polymeric layer having a reflectance of more than 25% of all light with a wavelength from 1000 nm to 2100 nm. The present invention also relates to a backsheet suitable for use in a photovoltaic module, said backsheet comprising said multi-layer material sheet; and to a photovoltaic module comprising said backsheet.

No. of Pages : 24 No. of Claims : 21

(12) PATENT APPLICATION PUBLICATION
(19) INDIA
(22) Date of filing of Application :14/12/2020
(21) Application No.202017054352 A
(43) Publication Date : 05/03/2021

(54) Title of the invention : ASPHALT COMPOSITIONS AND METHODS OF FORMING THE SAME

(51) International classification	:C04B0024080000, C04B0111200000, C08L0095000000, C04B0026260000, C04B0024260000
(31) Priority Document No	:62/690592
(32) Priority Date	:27/06/2018
(33) Name of priority country	:U.S.A.
(86) International Application No	:PCT/US2019/038615
Filing Date	:22/06/2019
(87) International Publication No	:WO 2020/005782
(61) Patent of Addition to Application Number	:NA
Filing Date	:NA
(62) Divisional to Application Number	:NA
Filing Date	:NA

(71)**Name of Applicant :**
1)HONEYWELL INTERNATIONAL INC.
Address of Applicant :Intellectual Property Patent Services 115 Tabor Road, M/S 4D3 P.O. Box 377 Morris Plains, New Jersey 07950 U.S.A.
(72)**Name of Inventor :**
1)HACKER, Scott Martin
2)RUAN, Yonghong

(57) Abstract :
An asphalt composition includes asphalt, a non-epoxidized oil chosen from flux oils, bio oils, recycled motor oils, liquid plasticizers, and combinations thereof, and a polyolefin. The polyolefin has a weight average molecular weight (Mw) of from about 1,000 to about 20,000 g/mol, an optional acid number of from about 5 to about 50 mg KOH/g, an optional saponification number of from about 10 to about 100 mg KOH/g, and a density of from about 0.92 to about 1 g/cm3. The asphalt composition has a performance grade of PG (52 to 88) and (-22 to -40), wherein (52 to 88) is an average seven day maximum pavement design temperature in degrees Celsius and represents deformation resistance and (-22 to -40) is an average one day minimum pavement design temperature in degrees Celsius and represents thermal cracking resistance, each as determined using AASHTO M320.

No. of Pages : 22 No. of Claims : 10

(12) PATENT APPLICATION PUBLICATION
(21) Application No.202017054385 A
(19) INDIA
(22) Date of filing of Application :14/12/2020
(43) Publication Date : 05/03/2021

(54) Title of the invention : TOOL HOLDER HAVING INTEGRALLY FORMED ANTI-VIBRATION COMPONENT AND CUTTING TOOL PROVIDED WITH TOOL HOLDER

(51) International classification	:B33Y0080000000, F16F0007116000, B23B0027000000, B23B0029020000, B23B0029120000
(31) Priority Document No	:16/006306
(32) Priority Date	:12/06/2018
(33) Name of priority country	:U.S.A.
(86) International Application No	:PCT/IL2019/050543
Filing Date	:14/05/2019
(87) International Publication No	:WO 2019/239397
(61) Patent of Addition to Application Number	:NA
Filing Date	:NA
(62) Divisional to Application Number	:NA
Filing Date	:NA

(71)**Name of Applicant :**
1)ISCAR LTD.
Address of Applicant :P.O. Box 11 24959 Tefen Israel
(72)**Name of Inventor :**
1)SAFFOURI, Jony

(57) Abstract :
Cutting edge T he tool holder 22 also includes a tool anti- vibration component 28, wherein the tool anti-vibration component 28 is additively manufactured. The tool anti-vibration component 28 is integrally formed to have unitary one-piece construction.

No. of Pages : 16 No. of Claims : 37

(12) PATENT APPLICATION PUBLICATION
(19) INDIA
(22) Date of filing of Application :14/12/2020
(21) Application No.202017054402 A
(43) Publication Date : 05/03/2021

(54) Title of the invention : VIEW-BASED BREAKPOINTS

(51) International classification	:G02B0027010000, G06F0011360000, G06T0019000000, G06F0003010000, G06F0003048100
(31) Priority Document No	:62/690012
(32) Priority Date	:26/06/2018
(33) Name of priority country	:U.S.A.
(86) International Application No	:PCT/US2019/038919
Filing Date	:25/06/2019
(87) International Publication No	:WO 2020/005898
(61) Patent of Addition to Application Number	:NA
Filing Date	:NA
(62) Divisional to Application Number	:NA
Filing Date	:NA

(71)**Name of Applicant :**
1)APPLE INC.
Address of Applicant :One Apple Park Way Cupertino, CA 95014 U.S.A.
(72)**Name of Inventor :**
1)CASELLA, Tyler L.
2)WANG, Norman N.
3)LOGGINS, Benjamin Breckin
4)DELWOOD, Daniel M.

(57) Abstract :
Systems and methods for simulated reality view-based breakpoints are described. Some implementations may include accessing motion data captured using one or more motion sensors; determining, based at least on the motion data, a view within a simulated reality environment presented using a head-mounted display; detecting that the view is a member of a set of views associated with a breakpoint; based at least on the view being a member of the set of views, triggering the breakpoint; responsive to the breakpoint being triggered, performing a debug action associated with the breakpoint; and, while performing the debug action, continuing to execute a simulation process of the simulated reality environment to enable a state of at least one virtual object in the simulated reality environment to continue to evolve and be viewed with the head-mounted display.

No. of Pages : 31 No. of Claims : 32

(12) PATENT APPLICATION PUBLICATION
(19) INDIA
(22) Date of filing of Application :14/12/2020
(21) Application No.202017054403 A
(43) Publication Date : 05/03/2021

(54) Title of the invention : SPIRITS PREPARED FROM COLD BREW COFFEE GROUNDS

(51) International classification	:C12H0006020000, C12G0003024000, A23F0005100000, C12G0003020000, A61K0031351000
(31) Priority Document No	:16/016024
(32) Priority Date	:22/06/2018
(33) Name of priority country	:U.S.A.
(86) International Application No	:16/016024
Filing Date	:22/06/2018
(87) International Publication No	:WO 2019/245632
(61) Patent of Addition to Application Number	:NA
Filing Date	:NA
(62) Divisional to Application Number	:NA
Filing Date	:NA

(71)**Name of Applicant :**
1)STARBUCKS CORPORATION
Address of Applicant :2401 Utah Avenue South Seattle, Washington 98134-1435 U.S.A.
(72)**Name of Inventor :**
1)BASSOLI, Denisley Gentil

(57) Abstract :
Several embodiments of the present disclosure relate to distilled coffee spirits, and techniques and methods for preparing the same. In some embodiments, a distilled coffee spirit is prepared by diluting cold brew coffee grounds into a fermentation mixture, fermenting the fermentation mixture with a fermentation agent, and distilling the entire fermentation mixture to produce a distilled coffee beverage.

No. of Pages : 21 No. of Claims : 20

(12) PATENT APPLICATION PUBLICATION
(19) INDIA
(22) Date of filing of Application :14/12/2020
(21) Application No.202017054404 A
(43) Publication Date : 05/03/2021

(54) Title of the invention : DISC BRAKE AND CALIPER

(51) International classification	:F16D0065092000, B62L0001000000, B65H0003520000, F16D0055228000, F16D0069040000
(31) Priority Document No	:2018-116902
(32) Priority Date	:20/06/2018
(33) Name of priority country	:Japan
(86) International Application No	:PCT/JP2019/024401
Filing Date	:20/06/2019
(87) International Publication No	:WO 2019/244960
(61) Patent of Addition to Application Number	:NA
Filing Date	:NA
(62) Divisional to Application Number	:NA
Filing Date	:NA

(71)**Name of Applicant :**
1)HITACHI AUTOMOTIVE SYSTEMS, LTD.
Address of Applicant :2520, Takaba, Hitachinaka-shi, Ibaraki 3128503 Japan
(72)**Name of Inventor :**
1)AMEMIYA Takeo
2)IWAHASHI Yoshiki

(57) Abstract :
The present invention includes: a locking member that locks a friction pad so as to be movable in a disc axial direction; and a press member that presses the friction pad against a disc rotor, wherein the friction pad has a lining material that comes into contact with the disc rotor and a back plate to which the lining material is attached; an elongation section that elongates in a direction inclined with respect to the longitudinal direction of the friction pad is formed on the back plate at an end thereof in the disc rotation direction; the locking member includes a pad support having a flat surface section that extends along the direction of elongation of the elongation section; and the elongation section is locked by the pad support.

No. of Pages : 78 No. of Claims : 9

(12) PATENT APPLICATION PUBLICATION
(19) INDIA
(22) Date of filing of Application :14/12/2020
(21) Application No.202017054406 A
(43) Publication Date : 05/03/2021

(54) Title of the invention : RESIN MATERIAL, AQUEOUS SOLUTION, AND ADHESIVE

(51) International classification	:C08F0216060000, C08F0008120000, C08L0029040000, C08F0218080000, C08L0023060000
(31) Priority Document No	:2018-100753
(32) Priority Date	:25/05/2018
(33) Name of priority country	:Japan
(86) International Application No	:PCT/JP2019/020609
Filing Date	:24/05/2019
(87) International Publication No	:WO 2019/225731
(61) Patent of Addition to Application Number	:NA
Filing Date	:NA
(62) Divisional to Application Number	:NA
Filing Date	:NA

(71)**Name of Applicant :**
1)KURARAY CO., LTD.
Address of Applicant :1621, Sakazu, Kurashiki-shi, Okayama 7100801 Japan
(72)**Name of Inventor :**
1)FUKUHARA Tadahito
2)TANIDA Tatsuya

(57) Abstract :
The present invention provides: a resin material having excellent hue, water solubility, and viscosity stability in an aqueous solution, the resin material having an ethylene-modified-vinyl-alcohol-based polymer as a main component thereof; and an aqueous solution and an adhesive containing the resin material. The present invention relates to a resin material containing: sodium acetate; and an ethylene-modified-vinyl-alcohol-based polymer having a content ratio of ethylene units of 1 mol% to less than 15 mol%, a viscosity-average polymerization degree of 200 to less than 3000, and a degree of saponification of 80 mol% to less than 99.9 mol% and containing 0.0005 mol% to 0.10 mol% of propyl groups at one terminal end thereof; the content of the sodium acetate being 0.05% by mass to less than 2% by mass.

No. of Pages : 31 No. of Claims : 15

(12) PATENT APPLICATION PUBLICATION
(19) INDIA
(22) Date of filing of Application :15/12/2020

(21) Application No.202017054442 A
(43) Publication Date : 05/03/2021

(54) Title of the invention : ELECTRONIC DEVICE AND METHOD FOR MANAGING BATTERY THEREOF

(51) International classification	:H02J0007000000, H04M0001020000, H05K0005000000, H05K0001180000, H05K0005020000
(31) Priority Document No	:10-2018-0086953
(32) Priority Date	:26/07/2018
(33) Name of priority country	:Republic of Korea
(86) International Application No	:PCT/KR2019/008740
Filing Date	:16/07/2019
(87) International Publication No	:WO 2020/022685
(61) Patent of Addition to Application Number	:NA
Filing Date	:NA
(62) Divisional to Application Number	:NA
Filing Date	:NA

(71)**Name of Applicant :**
1)SAMSUNG ELECTRONICS CO., LTD.
Address of Applicant :129, Samsung-ro, Yeongtong-gu Suwon-si Gyeonggi-do 16677 Republic of Korea
(72)**Name of Inventor :**
1)KIM, Duhyun
2)KANG, Seungbeom
3)CHOI, Wooin
4)PARK, Jungsik
5)SUNWOO, Seunghui
6)OH, Hyoungseok

(57) Abstract :
An electronic device is disclosed. The electronic device may include a housing having a first housing structure and a second housing structure, wherein the first and second housing structures are foldable with respect to each other about a hinge axis, a processor disposed in the housing, a first battery disposed in the first housing structure, a second battery disposed in the second housing, a flexible printed circuit board (FPCB) extending from the first housing structure to the second housing structure and crossing the hinge axis, a power management integrated circuit (PMIC), a first charging control circuit disposed in the first housing structure, and a second charging control circuit disposed in the second housing structure. In addition, various embodiments are possible which are understood through the disclosure.

No. of Pages : 42 No. of Claims : 15

(12) PATENT APPLICATION PUBLICATION
(21) Application No.202017054448 A
(19) INDIA
(22) Date of filing of Application :15/12/2020
(43) Publication Date : 05/03/2021

(54) Title of the invention : WATER TREATMENT METHOD AND WATER TREATMENT APPARATUS

(51) International classification	:C02F0003300000, C02F0003340000, C02F0003280000, C02F0101380000, C02F0101160000
(31) Priority Document No	:2018-118620
(32) Priority Date	:22/06/2018
(33) Name of priority country	:Japan
(86) International Application No	:PCT/JP2019/024447
Filing Date	:20/06/2019
(87) International Publication No	:WO 2019/244969
(61) Patent of Addition to Application Number	:NA
Filing Date	:NA
(62) Divisional to Application Number	:NA
Filing Date	:NA

(71)**Name of Applicant :**
1)ORGANO CORPORATION
Address of Applicant :1-2-8, Shinsuna, Koto-ku, Tokyo 1368631 Japan
(72)**Name of Inventor :**
1)YUI Hironori
2)YAMAMOTO Taichi
3)MIYAKE Masaki
4)HASEBE Yoshiaki

(57) Abstract :
Provided are: a water treatment method that comprises at least a denitrification step for denitrifying water to be treated with a denitrifying bacterium in the presence of a hydrogen donor, wherein the denitrification activity of the denitrifying bacterium can be maintained at a high level and thus the treatment speed can be increased; and a water treatment apparatus. The water treatment method comprises at least a denitrification step for passing water to be treated through a biological treatment tank 10 and denitrifying the same with a heterotrophic denitrifying bacterium in the presence of a hydrogen donor, wherein: molybdenum is added to the water to be treated to give a concentration of 0.01-1.0 mgMo/gN; a carrier is added to the biological treatment tank; and the nitrogen load to the carrier is controlled to 1.6 kgN/(m3-carrier.d) or greater.

No. of Pages : 23 No. of Claims : 4

(12) PATENT APPLICATION PUBLICATION
(19) INDIA
(22) Date of filing of Application :15/12/2020

(21) Application No.202017054465 A
(43) Publication Date : 05/03/2021

(54) Title of the invention : RESIN COMPOSITION AND FLOW CELLS INCORPORATING THE SAME

(51) International classification	:C08G0077442000, C08L0063000000, G01N0021640000, C08G0018670000, C08F0290060000
(31) Priority Document No	:62/701228
(32) Priority Date	:20/07/2018
(33) Name of priority country	:U.S.A.
(86) International Application No	:PCT/US2019/042415
Filing Date	:18/07/2019
(87) International Publication No	:WO 2020/018798
(61) Patent of Addition to Application Number	:NA
Filing Date	:NA
(62) Divisional to Application Number	:NA
Filing Date	:NA

(71)**Name of Applicant :**
1)ILLUMINA, INC.
Address of Applicant :5200 Illumina Way San Diego, California 92122 U.S.A.
2)ILLUMINA CAMBRIDGE LIMITED
(72)**Name of Inventor :**
1)MERKEL, Timothy J.
2)GEORGE, Wayne N.
3)BROWN, Andrew A.
4)ZAK, Audrey
5)ARTIOLI, Gianluca Andrea
6)MORRISON, Julia
7)ROMANOV, Nikolai
8)BERTI, Lorenzo
9)BOUD, Graham

(57) Abstract :
An example of a resin composition includes a free radical curable resin matrix including an acrylate and a siloxane, and a free radical photoinitiator. When cured, the resin composition has low or no autofluorescence when exposed to blue excitation wavelengths ranging from about 380 nm to about 480 nm or green excitation wavelengths ranging from about 510 nm to about 560 nm.

No. of Pages : 58 No. of Claims : 23

(12) PATENT APPLICATION PUBLICATION
(19) INDIA
(22) Date of filing of Application :15/12/2020
(21) Application No.202017054466 A
(43) Publication Date : 05/03/2021

(54) Title of the invention : RESIN COMPOSITION AND FLOW CELLS INCORPORATING THE SAME

(51) International classification	:C08L0063000000, G03F0007004000, G01N0021640000, C09D0163000000, G03F0007038000
(31) Priority Document No	:62/701246
(32) Priority Date	:20/07/2018
(33) Name of priority country	:U.S.A.
(86) International Application No	:PCT/US2019/042418
Filing Date	:18/07/2019
(87) International Publication No	:WO 2020/018801
(61) Patent of Addition to Application Number	:NA
Filing Date	:NA
(62) Divisional to Application Number	:NA
Filing Date	:NA

(71)**Name of Applicant :**
1)ILLUMINA, INC.
Address of Applicant :5200 Illumina Way San Diego, California 92122 U.S.A.
2)ILLUMINA CAMBRIDGE LIMITED
(72)**Name of Inventor :**
1)MERKEL, Timothy J.
2)GEORGE, Wayne N.
3)BROWN, Andrew A.
4)ZAK, Audrey
5)ARTIOLI, Gianluca Andrea
6)MORRISON, Julia
7)ROMANOV, Nikolai
8)BERTI, Lorenzo
9)BOUD, Graham

(57) Abstract :
An example of a resin composition includes an epoxy resin matrix, a free radical photoinitiator selected from the group consisting of 2-ethyl-9, 10-dimethoxyanthracene, 2,2-dimethoxy-2-phenylacetophenone, 2-ethoxy-2-phenylacetophenone, and a phosphine oxide, and a photoacid generator. When cured, the resin composition has low or no autofluorescence when exposed to blue excitation wavelengths ranging from about 380 nm to about 480 nm or green excitation wavelengths ranging from about 510 nm to about 560 nm.

No. of Pages : 69 No. of Claims : 25

(12) PATENT APPLICATION PUBLICATION
(19) INDIA
(22) Date of filing of Application :15/12/2020

(21) Application No.202017054474 A
(43) Publication Date : 05/03/2021

(54) Title of the invention : PHARMACEUTICAL FORMULATION OF ODEVIXIBAT

(51) International classification	:A61P0001160000, A61K0009000000, C07D0285360000, A61K0045060000, A61K0009160000
(31) Priority Document No	:1850761-6
(32) Priority Date	:20/06/2018
(33) Name of priority country	:Sweden
(86) International Application No	:PCT/SE2019/050603
Filing Date	:20/06/2019
(87) International Publication No	:WO 2019/245449
(61) Patent of Addition to Application Number	:NA
Filing Date	:NA
(62) Divisional to Application Number	:NA
Filing Date	:NA

(71)**Name of Applicant :**
1)ALBIREO AB
Address of Applicant :Arvid Wallgrens backe 20 413 46 Gteborg Sweden
(72)**Name of Inventor :**
1)BYR–D, Eva
2)GILLBERG, Per-Gran
3)TIVERT, Anna-Maria
4)BRYLAND, Rikard
5)DAHLQUIST, Ann-Charlotte
6)ELVERSSON, Jessica
7)GUSTAFSSON, Nils Ove
8)LUNDQVIST, Robert
9)YM‰N, Ingvar
10)BOHLIN, Martin

(57) Abstract :
The invention relates to a pharmaceutical formulation, e.g. a paediatric formulation,of odevixibat, which comprises a plurality of small particles. The formulation may be used in the treatment ofliver diseases such as bile acid-dependent liver diseases, and particularly cholestatic liver diseases such as biliary atresia,progressive familial intrahepatic cholestasis (PFIC), Alagille syndrome (ALGS) and paediatric cholestatic pruritus. The invention also relates to a process for the preparation of the pharmaceutical formulation.

No. of Pages : 70 No. of Claims : 33

(12) PATENT APPLICATION PUBLICATION
(19) INDIA
(22) Date of filing of Application :15/12/2020
(21) Application No.202017054475 A
(43) Publication Date : 05/03/2021

(54) Title of the invention : COMPOSITIONS AND METHODS FOR IN VIVO POST TRANSLATIONAL MODIFICATION

(51) International classification	:C12N0009100000, A61K0048000000, C12Q0001480000, G01N0033573000, A61K0039000000
(31) Priority Document No	:62/683344
(32) Priority Date	:11/06/2018
(33) Name of priority country	:U.S.A.
(86) International Application No	:PCT/US2019/036470
Filing Date	:11/06/2019
(87) International Publication No	:WO 2019/241193
(61) Patent of Addition to Application Number	:NA
Filing Date	:NA
(62) Divisional to Application Number	:NA
Filing Date	:NA

(71)**Name of Applicant :**
1)THE WISTAR INSTITUTE OF ANATOMY AND BIOLOGY
Address of Applicant :3601 Spruce Street Philadelphia, PA 19104 U.S.A.
(72)**Name of Inventor :**
1)WEINER, David
2)WISE, Megan
3)XU, Ziyang

(57) Abstract :
The present invention provides methods of post-translationally modifying a synthetic protein in a subject. In one embodiment, the method comprises administering to the subject a composition comprising a first recombinant nucleic acid sequence encoding the synthetic protein, and a second recombinant nucleic acid sequence encoding a modifier protein, wherein the modifier protein post-translationally modifies the synthetic biologic in the subject. In one embodiment, the post translational modification is sulfation and the modifier protein is selected from the group consisting of tyrosylprotein sulfotransferase 1 (TPST1) and TPST2.

No. of Pages : 81 No. of Claims : 27

(12) PATENT APPLICATION PUBLICATION
(21) Application No.202017054479 A
(19) INDIA
(22) Date of filing of Application :15/12/2020
(43) Publication Date : 05/03/2021

(54) Title of the invention : BONE CONDUCTION SPEAKER AND TESTING METHOD THEREFOR

(51) International classification	:H04R0009020000, H04R0009060000, H04R0001100000, H04R0001280000, H04R0003000000
(31) Priority Document No	:201810624043.5
(32) Priority Date	:15/06/2018
(33) Name of priority country	:China
(86) International Application No	:PCT/CN2019/070545
Filing Date	:05/01/2019
(87) International Publication No	:WO 2019/237726
(61) Patent of Addition to Application Number	:NA
Filing Date	:NA
(62) Divisional to Application Number	:NA
Filing Date	:NA

(71)**Name of Applicant :**
1)SHENZHEN VOXTECH CO., LTD.
Address of Applicant :Floors 1 And 4-6, Factory Building 14, Shancheng Industrial Park, Shiyan Street, Bao€™an District Shenzhen, Guangdong 518108 China
(72)**Name of Inventor :**
1)ZHENG, Jinbo
2)LIAO, Fengyun
3)ZHANG, Lei
4)QI, Xin

(57) Abstract :
Disclosed in the embodiments of the present application are a bone conduction speaker and a testing method therefor. The bone conduction speaker comprises: a magnetic circuit assembly, used for providing a magnetic field; a vibration assembly, at least part of the vibration assembly being positioned in the magnetic field, for converting the electrical signal inputted into the vibration assembly into a mechanical vibration signal; a shell, comprising an outer shell panel facing the human body side and an outer shell rear face opposite to the outer shell panel, the shell accommodating the vibration assembly, the vibration assembly making the outer shell panel and the outer shell rear face vibrate, the vibration of the outer shell panel having a first phase, and the vibration of the outer shell rear face having a second phase; when the vibration frequency of the vibration of the outer shell panel and the outer shell rear face is 2000 Hz to 3000 Hz, the absolute value of the difference between the first phase and the second phase is less than 60 degrees. The bone conduction speaker of the present application can significantly reduce sound leakage and improve sound quality. The structure is simpler and the size is smaller.

No. of Pages : 77 No. of Claims : 10

(12) PATENT APPLICATION PUBLICATION
(21) Application No.202017054498 A
(19) INDIA
(22) Date of filing of Application :15/12/2020
(43) Publication Date : 05/03/2021

(54) Title of the invention : CLOSED-CROSS-SECTION STRUCTURAL MATERIAL HAVING HIGH COLLISION PERFORMANCE AND BODY SKELETON FOR AUTOMOBILE

(51) International classification	:B62D0025200000, B62D0025080000, H04N0009310000, H01R0013639000, A61B0017040000
(31) Priority Document No	:2018-113385
(32) Priority Date	:14/06/2018
(33) Name of priority country	:Japan
(86) International Application No	:PCT/JP2019/023457
Filing Date	:13/06/2019
(87) International Publication No	:WO 2019/240214
(61) Patent of Addition to Application Number	:NA
Filing Date	:NA
(62) Divisional to Application Number	:NA
Filing Date	:NA

(71)**Name of Applicant :**
1)NIPPON STEEL CORPORATION
Address of Applicant :6-1, Marunouchi 2-chome, Chiyoda-ku, Tokyo 1008071 Japan
(72)**Name of Inventor :**
1)SONOBE, Soma
2)ONO, Atsushi
3)MIKAZUKI, Yutaka

(57) Abstract :
This closed-cross-section structural material comprises a hollow member having a collision-side wall part positioned on a collision side, an opposite-collision-side wall part opposing the collision-side wall part, a first side wall part and a second side wall part as a pair connecting to an end of the collision-side wall part and an end of the opposite-collision-side wall part, a first inner-side wall part extending to the inner side of the hollow member from the first side wall part, a second inner-side wall part extending to the inner side of the hollow member from the second side wall part, a third inner-side wall part connecting to the first inner-side wall part and the collision-side wall part, and a fourth inner-side wall part connecting to the second inner-side wall part and the collision-side wall part.

No. of Pages : 36 No. of Claims : 10

(12) PATENT APPLICATION PUBLICATION
(21) Application No.202017054500 A
(19) INDIA
(22) Date of filing of Application :15/12/2020
(43) Publication Date : 05/03/2021

(54) Title of the invention : METHODS AND DEVICES FOR CODING AND DECODING A DATA STREAM REPRESENTING AT LEAST ONE IMAGE

(51) International classification	:H04N0019176000, H04N0019110000, H04N0019593000, H04N0019610000, H04N0019159000	(71)**Name of Applicant :** **1)ORANGE** Address of Applicant :78 rue Olivier de Serres 75015 PARIS France
(31) Priority Document No	:1855792	(72)**Name of Inventor :** **1)HENRY, Flix**
(32) Priority Date	:27/06/2018	**2)ABDOLI, Mohsen**
(33) Name of priority country	:France	
(86) International Application No	:PCT/FR2019/051479	
Filing Date	:18/06/2019	
(87) International Publication No	:WO 2020/002796	
(61) Patent of Addition to Application Number	:NA	
Filing Date	:NA	
(62) Divisional to Application Number	:NA	
Filing Date	:NA	

(57) Abstract :
The invention relates to a coding method and a method for decoding a coded data stream representing at least one image that is split into blocks. For at least one block of the image, referred to as the current block, it is determined (E42) if the current block is coded according to an intra-image coding mode or another coding mode, the intra-image coding mode being a coding mode using an intra-image prediction mode selected from among a group of intra-image prediction modes according to at least one intra-image prediction mode associated with a block adjacent to the current block. When the current block is coded according to said intra-image coding mode, an intra-image prediction mode from within said group of intra-image prediction modes is determined (E431) for the current block according to at least one intra-image prediction mode associated with a previously decoded block of the image, the current block is decoded (E43) according to said determined intra-image prediction mode that is associated (E437) with the current block. When the current block is coded according to the other coding mode, the current block is decoded (E44) according to said other coding mode, an intra-image prediction mode is determined (E449) from within said group of intra-image prediction modes and is associated (E450) with the current block.

No. of Pages : 26 No. of Claims : 15

(12) PATENT APPLICATION PUBLICATION
(21) Application No.202017054501 A
(19) INDIA
(22) Date of filing of Application :15/12/2020
(43) Publication Date : 05/03/2021

(54) Title of the invention : INTRASCOPIC HYDRAULIC CYLINDER

(51) International classification	:F15B0015140000, B66F0003280000, F15B0015160000, F15B0015180000, G01M0013000000
(31) Priority Document No	:2018203763
(32) Priority Date	:29/05/2018
(33) Name of priority country	:Australia
(86) International Application No	:PCT/AU2019/050527
Filing Date	:28/05/2019
(87) International Publication No	:WO 2019/227146
(61) Patent of Addition to Application Number	:NA
Filing Date	:NA
(62) Divisional to Application Number	:NA
Filing Date	:NA

(71)**Name of Applicant :**
1)FLIP SCREEN AUSTRALIA PTY LTD
Address of Applicant :235 Copland Street East Wagga Wagga, New South Wales 2650 Australia
(72)**Name of Inventor :**
1)TURNBULL, Sam

(57) Abstract :
A hydraulic cylinder (1) which acts as a cylinder hollow rod in an outer hydraulic cylinder (10) is disclosed comprising an inner rod (4) with a piston (2) and piston-gland (3) wherein the cylinder hollow rod (1) is held longitudinally displaceably in the cylinder housing (10). The system additionally has a cylinder base (5) and a fibre cover (14) on the outer casing of hydraulic cylinder (10). The system also has ports for fluid (11, 12 and 13) corresponding to four chambers, (67, 8 and 9 respectively). According to the invention, when pressure is applied to chamber (7), the internal rod (4) extends into the chamber (6), displacing its mass and dramatically increases the pressure in Chamber (6). This displacement is effectively an internal pump which can be activated multiple times within a given stroke of rod (1).

No. of Pages : 8 No. of Claims : 5

(12) PATENT APPLICATION PUBLICATION
(19) INDIA
(22) Date of filing of Application :15/12/2020
(21) Application No.202017054504 A
(43) Publication Date : 05/03/2021

(54) Title of the invention : BATTERY MANAGEMENT SYSTEM

(51) International classification	:H02J0007000000, B60L0053800000, B60L0058160000, B60L0058120000, B60L0058000000
(31) Priority Document No	:2018-124979
(32) Priority Date	:29/06/2018
(33) Name of priority country	:Japan
(86) International Application No	:PCT/JP2019/025487
Filing Date	:26/06/2019
(87) International Publication No	:WO 2020/004509
(61) Patent of Addition to Application Number	:NA
Filing Date	:NA
(62) Divisional to Application Number	:NA
Filing Date	:NA

(71)**Name of Applicant :**
1)RESC, LTD.
Address of Applicant :Room 401, 3-19-4, Kamata, Ota-ku, Tokyo 1440052 Japan
(72)**Name of Inventor :**
1)SUZUKI Daisuke

(57) Abstract :
[Problem] To provide a battery management system for an electrical vehicle that is suitable for a sharing service. [Solution] A battery management system 100 includes: an electric vehicle 2 that can travel as a result of being driven by a motor powered by an exchangeable battery 1; a battery station 3 that can adjust a charging rate and charge the battery 1; and a management server 4 that is connected to the electric vehicle 2 and the battery station 3 via a communication network. The management server 4: quantitatively evaluates the exchangeability of the battery 1 stored in the battery station 3 on the basis of at least the position of the electric vehicle 2 and the remaining cell power of the battery 1 mounted in the electric vehicle 2; determines a charging rate for charging the battery 1 by the battery station 3 on the basis of an evaluation value for the exchangeability of the battery 1; and sends control information related to the determined charging rate to the battery station 3.

No. of Pages : 68 No. of Claims : 9

(12) PATENT APPLICATION PUBLICATION
(19) INDIA
(22) Date of filing of Application :15/12/2020
(21) Application No.202017054505 A
(43) Publication Date : 05/03/2021

(54) Title of the invention : HYGIENE WASH

(51) International classification	:C05G0003000000, C10C0005000000, A01N0061000000, A61Q0019000000, A61Q0013000000
(31) Priority Document No	:PI 2018701868
(32) Priority Date	:16/05/2018
(33) Name of priority country	:Malaysia
(86) International Application No	:PCT/MY2018/050045
Filing Date	:06/07/2018
(87) International Publication No	:WO 2019/221593
(61) Patent of Addition to Application Number	:NA
Filing Date	:NA
(62) Divisional to Application Number	:NA
Filing Date	:NA

(71)**Name of Applicant :**
1)DIAMOND STAR GLOBAL SDN. BHD.
Address of Applicant :Lot 3734, Tupai Light Industrial Area, Taiping, Perak, 34000 Malaysia
(72)**Name of Inventor :**
1)CHONG KWIK, Chuah
2)SHIN SIONG, Loh

(57) Abstract :
The present invention provides a method for preparing a personal care product (302), comprising steps of obtaining a wood vinegar (203, 301) and adding the wood vinegar (203, 301) into the personal care product (302) so that the purified wood vinegar (301) makes up 18-22% of the total weight or volume of the personal care product. The wood vinegar (203, 301) is obtained by pyrolysis (100) of woods and leaves (102) from Rhizophora apiculata (101), wherein the wood vinegar (301) inactivates or kills microorganisms that cause skin and urinary tract infections but retains a substantial amount of beneficial microorganisms. The wood vinegar (203, 301) is obtained without having guaiacol.

No. of Pages : 14 No. of Claims : 15

(12) PATENT APPLICATION PUBLICATION
(19) INDIA
(22) Date of filing of Application :15/12/2020
(21) Application No.202017054515 A
(43) Publication Date : 05/03/2021

(54) Title of the invention : REACTION TREATMENT DEVICE

(51) International classification	:G01N0021640000, G11B0007000000, G01N0037000000, G02B0021000000, C12M0001000000
(31) Priority Document No	:2018-129123
(32) Priority Date	:06/07/2018
(33) Name of priority country	:Japan
(86) International Application No	:PCT/JP2019/025331
Filing Date	:26/06/2019
(87) International Publication No	:WO 2020/008972
(61) Patent of Addition to Application Number	:NA
Filing Date	:NA
(62) Divisional to Application Number	:NA
Filing Date	:NA

(71)**Name of Applicant :**
1)NIPPON SHEET GLASS COMPANY, LIMITED
Address of Applicant :5-27, Mita 3-chome, Minato-ku Tokyo 1086321 Japan
(72)**Name of Inventor :**
1)OGI Shuya
2)FUKUZAWA Takashi

(57) Abstract :
This reaction treatment device is provided with: a reaction treatment container 10; a first optical head 51 provided with a first objective lens OB1 that irradiates a sample with first excitation light while concentrating first fluorescent light generated from the sample; a second optical head 55 provided with a second objective lens OB2 that irradiates a sample with second excitation light while concentrating second fluorescent light generated from the sample; and a holding member 61 for holding the first optical head 51 and the second optical head 55. The wavelength range of the first fluorescent light and the wavelength range of the second fluorescent light at least partially overlap. The distance P between the optical axis of the first objective lens OB1 and the optical axis of the second objective lens OB2 satisfies 2·P0+2·P1+4·P2+4·P3

No. of Pages : 47 No. of Claims : 10

(12) PATENT APPLICATION PUBLICATION
(19) INDIA
(22) Date of filing of Application :15/12/2020

(21) Application No.202017054532 A
(43) Publication Date : 05/03/2021

(54) Title of the invention : SYSTEM AND METHOD TO MONITOR, ALERT AND PREDICT PRECURSORY BEHAVIOR

(51) International classification	:G06Q0040080000, G06Q0010060000, G06Q0020400000, G06Q0010100000, G07C0005080000
(31) Priority Document No	:62/691430
(32) Priority Date	:28/06/2018
(33) Name of priority country	:U.S.A.
(86) International Application No	:PCT/US2019/039965
Filing Date	:28/06/2019
(87) International Publication No	:WO 2020/006501
(61) Patent of Addition to Application Number	:NA
Filing Date	:NA
(62) Divisional to Application Number	:NA
Filing Date	:NA

(71)**Name of Applicant :**
1)CLEMENS, Jo Lynn, J.
Address of Applicant :19777 N. 76th St., #2210 Scottsdale, AZ 85255 U.S.A.
(72)**Name of Inventor :**
1)CLEMENS, Jo Lynn, J.

(57) Abstract :
A multi-stack software solution including artificial intelligence and bloekehain to reduce employer liability and insurer risk is disclosed. Through ongoing and real-time assessment, the system curbs employer negligence through crime or fraud deterrence, re-enforcement of policies, obtaining information to assist in prevention, and providing continual recommendations for improvement.

No. of Pages : 30 No. of Claims : 18

(12) PATENT APPLICATION PUBLICATION
(19) INDIA
(22) Date of filing of Application :15/12/2020
(21) Application No.202017054538 A
(43) Publication Date : 05/03/2021

(54) Title of the invention : DELAMANID-CONTAINING COMPOSITION

(51) International classification	:A61K0009140000, A61K0047380000, A61K0047320000, C08K0009020000, B01J0035000000
(31) Priority Document No	:2018-111464
(32) Priority Date	:11/06/2018
(33) Name of priority country	:Japan
(86) International Application No	:PCT/JP2019/023006
Filing Date	:11/06/2019
(87) International Publication No	:WO 2019/240104
(61) Patent of Addition to Application Number	:NA
Filing Date	:NA
(62) Divisional to Application Number	:NA
Filing Date	:NA

(71)**Name of Applicant :**
1)OTSUKA PHARMACEUTICAL CO., LTD.
Address of Applicant :2-9, Kanda Tsukasa-machi, Chiyoda-ku, Tokyo 1018535 Japan
(72)**Name of Inventor :**
1)NAKAMURA, Atsuya
2)YAMAZAKI, Hiroyuki
3)HASEGAWA, Masahiro
4)KAMADA, Naoki

(57) Abstract :
Provided is a composition including delamanid particles for which the formation of secondary particles is suppressed. Specifically, provided is a composition including (A) delamanid particles and (B) a surface stabilizer.

No. of Pages : 51 No. of Claims : 14

(12) PATENT APPLICATION PUBLICATION
(21) Application No.202017054540 A
(19) INDIA
(22) Date of filing of Application :15/12/2020
(43) Publication Date : 05/03/2021

(54) Title of the invention : A PROCESS FOR START-UP OF THE HYDRODESULFURIZATION SECTION OF A NATURAL GAS FIRED REFORMER

(51) International classification	:C10L0003100000, C01B0003380000, C07C0029151000, C10G0045120000, H01M0008061200	(71)**Name of Applicant :** **1)HALDOR TOPS˜E A/S** Address of Applicant :Haldor Tops¸es All 1 2800 Kgs. Lyngby Denmark
(31) Priority Document No	:PA 2018 00302	(72)**Name of Inventor :** **1)DAHL, Per Juul**
(32) Priority Date	:27/06/2018	
(33) Name of priority country	:Denmark	
(86) International Application No	:PCT/EP2019/066598	
Filing Date	:24/06/2019	
(87) International Publication No	:WO 2020/002192	
(61) Patent of Addition to Application Number	:NA	
Filing Date	:NA	
(62) Divisional to Application Number	:NA	
Filing Date	:NA	

(57) Abstract :
In a process for the start-up of a hydrodesulfurization section, comprising the steps of providing a natural gas feed, passing the natural gas feed through the waste heat section of a reformer, thereby heating the natural gas feed, and passing the heated natural gas feed through a hydrodesulfurization section, thereby heating the hydrodesulfurization section while producing a desulfurized natural gas stream, a part of the desulfurized natural gas stream is provided as fuel for the reformer, while the remainder of the desulfurized natural gas is recycled to at least one point upstream the waste heat section.

No. of Pages : 7 No. of Claims : 3

(12) PATENT APPLICATION PUBLICATION
(19) INDIA
(22) Date of filing of Application :15/12/2020
(21) Application No.202017054545 A
(43) Publication Date : 05/03/2021

(54) Title of the invention : THERAPEUTIC AGENT COMPOSITION AND METHOD OF USE, FOR TREATMENT OF MILD COGNITIVE IMPAIRMENT, DEPRESSION, AND PSYCHOLOGICAL DISORDERS

(51) International classification	:A61K0038050000, A61K0038000000, A61K0038300000, A61K0031400000, A61K0045060000
(31) Priority Document No	:62/671485
(32) Priority Date	:15/05/2018
(33) Name of priority country	:U.S.A.
(86) International Application No	:PCT/US2019/032403
Filing Date	:15/05/2019
(87) International Publication No	:WO 2019/222339
(61) Patent of Addition to Application Number	:NA
Filing Date	:NA
(62) Divisional to Application Number	:NA
Filing Date	:NA

(71)**Name of Applicant :**
1)TRAN, Lloyd Hung Loi
Address of Applicant :5910 Allen Avenue San Jose, CA 95123 U.S.A.
(72)**Name of Inventor :**
1)TRAN, Lloyd Hung Loi

(57) Abstract :
The present invention generally relates to the use of cyclic Prolyl Glycine (cyclic PG or cPG) and analogues and mimetics thereof, as neuroprotective agents for the treatment and or prevention of cognitive impairment and neurological disorders including but not limited to cerebral ischemia or cerebral infarction, status epilepticus, perinatal asphyxia, anoxia, and cerebral trauma, as well as to the treatment and prevention of chronic neurodegenerative disorders such as Alzheimer's disease, Parkinson's disease, and Huntington's disease, and as anticonvulsants. The present invention also generally provides manufacturing methods to prepare of dosage forms. The present invention further generally relates to the use of cyclic Prolyl Glycine and analogues and mimetics thereof, as neuroprotective and neuro-regenerating agents for the treatment and or prevention of depression and other psychological disorders.

No. of Pages : 43 No. of Claims : 25

(12) PATENT APPLICATION PUBLICATION
(19) INDIA
(22) Date of filing of Application :15/12/2020
(21) Application No.202017054567 A
(43) Publication Date : 05/03/2021

(54) Title of the invention : ANTI-DANDRUFF COMPOSITION

(51) International classification	:A61Q0005000000, A61K0008490000, A61Q0005020000, A61K0008340000, A61Q0019000000
(31) Priority Document No	:201821018779
(32) Priority Date	:18/05/2018
(33) Name of priority country	:India
(86) International Application No	:PCT/IB2019/000370
Filing Date	:16/05/2019
(87) International Publication No	:WO 2019/220203
(61) Patent of Addition to Application Number	:NA
Filing Date	:NA
(62) Divisional to Application Number	:NA
Filing Date	:NA

(71)**Name of Applicant :**
1)KANCOR INGREDIENTS LTD
Address of Applicant :5th Floor, Imperium 159 Marol Maroshi Road Vijay Nagar, Opp. Police Quarters Andheri (East) Mumbai 400 059 Maharashtra India
(72)**Name of Inventor :**
1)KHAIAT, Alain, Victor
2)VIJAYAN, Sasheendran
3)VAIKKATHUKATTIL, Shaju Asokan
4)UNNIKRISHNAN, Prakash Kumar
5)SIVAPRASAD, Prasobh

(57) Abstract :
Described herein is an anti-dandruff composition including at least two anti-dandruff actives selected from a punicalagin composition; a first monoterpenoid composition, or a second monoterpenoid composition; and a dermatologically-acceptable carrier. The two or more anti-dandruff actives are present in the anti-dandruff composition in an effective amount to treat or prevent dandruff caused by the proliferation of Malassezia furfur.

No. of Pages : 35 No. of Claims : 23

(12) PATENT APPLICATION PUBLICATION
(19) INDIA
(22) Date of filing of Application :15/12/2020
(21) Application No.202017054585 A
(43) Publication Date : 05/03/2021

(54) Title of the invention : GENERAL AMYLOID INTERACTION MOTIF (GAIM)

(51) International classification	:G01N0033680000, C07K0016180000, C12N0015113000, C07K0014470000, A61K0048000000
(31) Priority Document No	:62/685757
(32) Priority Date	:15/06/2018
(33) Name of priority country	:U.S.A.
(86) International Application No	:PCT/US2019/037179
Filing Date	:14/06/2019
(87) International Publication No	:WO 2019/241628
(61) Patent of Addition to Application Number	:NA
Filing Date	:NA
(62) Divisional to Application Number	:NA
Filing Date	:NA

(71)**Name of Applicant :**
1)PROCLARA BIOSCIENCES, INC.
Address of Applicant :125 Cambridgepark Drive Suite 301 Cambridge, Massachusetts 02140 U.S.A.
(72)**Name of Inventor :**
1)KRISHNAN, Rajaraman
2)ASP, Eva
3)PROSCHITSKY, Ming
4)FISHER, Richard

(57) Abstract :
The present invention relates to variants of the general amyloid interaction motif (GAIM) of bacteriophage gene 3 protein (g3p) and fusion proteins thereof. The GAIM variants and fusion proteins of the invention are partially or fully deimmunized and demonstrate superior binding and specificity to a diverse array of amyloid proteins, and exhibit enhanced amyloid remodeling and inhibition of amyloid aggregation. The present invention further relates to nucleic acids, vectors, host cells, and methods of making the GAIM variants and fusion proteins thereof. The present invention also relates to pharamacuetical compositions and methods of increasing bacteriophage infectivity, methods of detecting amyloid aggregates, and methods of diagnosing and/or treating a disease associated with misfolded and/or aggregated amyloid protein.

No. of Pages : 104 No. of Claims : 25

(12) PATENT APPLICATION PUBLICATION
(19) INDIA
(22) Date of filing of Application :15/12/2020
(21) Application No.202017054586 A
(43) Publication Date : 05/03/2021

(54) Title of the invention : METHOD FOR PREPARING ALIPHATIC ISOCYANATES

(51) International classification	:C01B0003380000, C07C0263100000, C07C0263040000, H04W0024100000, C11C0003000000
(31) Priority Document No	:10-2018-0069825
(32) Priority Date	:18/06/2018
(33) Name of priority country	:Republic of Korea
(86) International Application No	:PCT/KR2019/006667
Filing Date	:03/06/2019
(87) International Publication No	:WO 2019/245192
(61) Patent of Addition to Application Number	:NA
Filing Date	:NA
(62) Divisional to Application Number	:NA
Filing Date	:NA

(71)**Name of Applicant :**
1)HANWHA SOLUTIONS CORPORATION
Address of Applicant :86, Cheonggyecheon-ro, Jung-gu, Seoul 04541 Republic of Korea
(72)**Name of Inventor :**
1)RYU, Hyun Cheol
2)HAN, Kee Do

(57) Abstract :
The present invention relates to a method for preparing aliphatic isocyanates. More particularly, the present invention relates to a method for preparing isocyanates with high purity that can efficiently recover unreacted materials and recycle same in a reaction step, and save energy consumed when separating reactants.

No. of Pages : 19 No. of Claims : 10

(12) PATENT APPLICATION PUBLICATION
(19) INDIA
(22) Date of filing of Application :15/12/2020
(21) Application No.202017054587 A
(43) Publication Date : 05/03/2021

(54) Title of the invention : COMBINED POWER GENERATION FACILITY AND OPERATION METHOD THEREOF

(51) International classification	:F01K0023100000, F02C0003300000, F02C0006180000, F02C0007260000, F01K0013020000
(31) Priority Document No	:2018-124380
(32) Priority Date	:29/06/2018
(33) Name of priority country	:Japan
(86) International Application No	:PCT/JP2019/016792
Filing Date	:19/04/2019
(87) International Publication No	:WO 2020/003708
(61) Patent of Addition to Application Number	:NA
Filing Date	:NA
(62) Divisional to Application Number	:NA
Filing Date	:NA

(71)**Name of Applicant :**
1)MITSUBISHI POWER, LTD.
Address of Applicant :3-1, Minatomirai 3-chome, Nishi-ku, Yokohama-shi, Kanagawa 2208401 Japan
(72)**Name of Inventor :**
1)ASAO Takashi
2)SATO Kazuhiko
3)YOSHIDA Shohei
4)KOGANEZAWA Tomomi

(57) Abstract :
The present invention provides a method for operating a combined power generation facility that can shorten the start-up time of the combined power generation facility (shorten the time to reach the rated load) and enables high-efficiency operation at the start-up by adopting a gas turbine that uses high-humidity air. The method for operating a combined power generation facility according to the present invention comprises: a gas turbine; an exhaust heat recovery boiler that generates steam using exhaust gas from the gas turbine as a heat source; and a steam turbine that is driven by the steam generated in the exhaust heat recovery boiler, wherein the method adopts, as the gas turbine, a high-humidity combustion gas turbine configured to inject steam generated in the exhaust heat recovery boiler into a combustor. The method is characterized in that at the start-up of the high-humidity combustion gas turbine, the entire amount of steam generated in the exhaust heat recovery boiler is injected into the high-humidity combustion gas turbine via the combustor to start the turbine.

No. of Pages : 28 No. of Claims : 17

(12) PATENT APPLICATION PUBLICATION
(21) Application No.202017054588 A
(19) INDIA
(22) Date of filing of Application :15/12/2020
(43) Publication Date : 05/03/2021

(54) Title of the invention : AGROCHEMICAL FORMULATIONS CONTAINING A POLYMERIC CRYSTAL GROWTH INHIBITOR

(51) International classification	:A01N0043653000, A01N0043400000, A01N0043560000, A01N0025220000, A01N0043820000	(71)**Name of Applicant :** **1)BAYER AKTIENGESELLSCHAFT** Address of Applicant :Kaiser-Wilhelm-Allee 1 51373 Leverkusen Germany
(31) Priority Document No	:62/676518	(72)**Name of Inventor :**
(32) Priority Date	:25/05/2018	**1)SINGH, Milind**
(33) Name of priority country	:U.S.A.	**2)DAS, Anjan**
(86) International Application No	:PCT/EP2019/063268	**3)ROSA, Fred**
Filing Date	:22/05/2019	**4)HANSON, William**
(87) International Publication No	:WO 2019/224280	**5)FAERS, Malcolm**
(61) Patent of Addition to Application Number	:NA	
Filing Date	:NA	
(62) Divisional to Application Number	:NA	
Filing Date	:NA	

(57) Abstract :
The disclosure provides for agrochemical compositions comprising a succinate dehydrogenase inhibitor and a polymeric crystal growth inhibitor. The disclosure further provides for methods of reducing crystal growth in agriculturally-active compounds in an agrochemical composition. In yet a further aspect, the disclosure provides for methods of utilizing an agrochemical composition comprising a succinate inhibitor and a polymeric crystal growth inhibitor to control pests in a plant or crop.

No. of Pages : 57 No. of Claims : 21

(12) PATENT APPLICATION PUBLICATION
(19) INDIA
(22) Date of filing of Application :15/12/2020
(21) Application No.202017054589 A
(43) Publication Date : 05/03/2021

(54) Title of the invention : DEVICE, SYSTEM AND METHOD FOR DIRECT ELECTRICAL MEASUREMENT OF ENZYME ACTIVITY

(51) International classification	:G01N0021640000, B01L0003000000, C12Q0001686900, A61K0039385000, C12Q0001000000
(31) Priority Document No	:62/673080
(32) Priority Date	:17/05/2018
(33) Name of priority country	:U.S.A.
(86) International Application No	:PCT/US2019/032707
Filing Date	:16/05/2019
(87) International Publication No	:WO 2019/222527
(61) Patent of Addition to Application Number	:NA
Filing Date	:NA
(62) Divisional to Application Number	:NA
Filing Date	:NA

(71)**Name of Applicant :**
1)LINDSAY, Stuart
Address of Applicant :3229 E. Desert Lane Phoenix, AZ 85042 U.S.A.
(72)**Name of Inventor :**
1)LINDSAY, Stuart
2)LINDSAY, Stuart

(57) Abstract :
The present disclosure relates to a device, system and method for sensing functional motions of a single protein molecule via direct attachment of one or more electrodes to the molecule. The present disclosure also relates to an array, a system comprising an array and method for sequencing a biopolymer using an array.

No. of Pages : 37 No. of Claims : 35

(12) PATENT APPLICATION PUBLICATION
(19) INDIA
(22) Date of filing of Application :15/12/2020

(21) Application No.202017054604 A
(43) Publication Date : 05/03/2021

(54) Title of the invention : MODULATORS OF APOL1 EXPRESSION

(51) International classification	:C12N0015113000, A61P0001160000, C07H0021040000, C07H0021000000, A61K0031713000
(31) Priority Document No	:62/674865
(32) Priority Date	:22/05/2018
(33) Name of priority country	:U.S.A.
(86) International Application No	:PCT/US2019/033244
Filing Date	:21/05/2019
(87) International Publication No	:WO 2019/226611
(61) Patent of Addition to Application Number	:NA
Filing Date	:NA
(62) Divisional to Application Number	:NA
Filing Date	:NA

(71)**Name of Applicant :**
1)IONIS PHARMACEUTICALS, INC.
Address of Applicant :2855 Gazelle Court Carlsbad, CA 92010 U.S.A.
(72)**Name of Inventor :**
1)FREIER, Susan, M.

(57) Abstract :
The present embodiments provide methods, compounds, and compositions useful for inhibiting APOL1 expression, which may be useful for treating, preventing, or ameliorating a disease associated with APOL1.

No. of Pages : 188 No. of Claims : 62

(12) PATENT APPLICATION PUBLICATION
(21) Application No.202017054612 A
(19) INDIA
(22) Date of filing of Application :15/12/2020
(43) Publication Date : 05/03/2021

(54) Title of the invention : CORN TRANSGENIC EVENT MON 95379 AND METHODS FOR DETECTION AND USES THEREOF

(51) International classification	:C12N0015820000, C12Q0001689500, A01N0057200000, A01H0005100000, C12N0015100000	(71)**Name of Applicant :** **1)MONSANTO TECHNOLOGY LLC** Address of Applicant :800 North Lindbergh Boulevard St. Louis, MO 63167 U.S.A.
(31) Priority Document No	:62/711810	(72)**Name of Inventor :**
(32) Priority Date	:30/07/2018	**1)ANDERSON, Heather, M.**
(33) Name of priority country	:U.S.A.	**2)BROWN, Sarah, L.**
(86) International Application No	:PCT/US2019/043666	**3)CARVALHO, Renato, A.**
Filing Date	:26/07/2019	**4)CASTRO, Ancideriton, A.**
(87) International Publication No	:WO 2020/028172	**5)DUNKMANN, Katherine, M.**
(61) Patent of Addition to Application Number	:NA	**6)EVANS, Adam, J.**
Filing Date	:NA	**7)FLASINSKI, Stanislaw**
(62) Divisional to Application Number	:NA	**8)GRIFFITH, Cara**
Filing Date	:NA	**9)SHEN, Tianxiang**
		10)SMITH, Todd, R.
		11)WINDLER, Heidi, M.

(57) Abstract :
The invention provides a transgenic corn event MON 95379, plants, plant cells, seeds, plant parts, progeny plants, and commodity products comprising event MON 95379. The invention also provides polynucleotides specific for event MON 95379 and methods for using and detecting event MON 95379 as well as plants, plant cells, seeds, plant parts, progeny plants, and commodity products comprising event MON 95379.

No. of Pages : 83 No. of Claims : 28

(12) PATENT APPLICATION PUBLICATION
(19) INDIA
(22) Date of filing of Application :15/12/2020
(21) Application No.202017054613 A
(43) Publication Date : 05/03/2021

(54) Title of the invention : COMPOSITIONS AND METHODS FOR IMPROVING SURVIVABILITY OF AQUATIC ANIMALS

(51) International classification	:A23K0010180000, A01K0063040000, A01K0061130000, A01K0061590000, A23K0050800000
(31) Priority Document No	:62/677372
(32) Priority Date	:29/05/2018
(33) Name of priority country	:U.S.A.
(86) International Application No	:PCT/US2019/034366
Filing Date	:29/05/2019
(87) International Publication No	:WO 2019/232026
(61) Patent of Addition to Application Number	:NA
Filing Date	:NA
(62) Divisional to Application Number	:NA
Filing Date	:NA

(71)**Name of Applicant :**
1)BIOWISH TECHNOLOGIES, INC.
Address of Applicant :2724 Erie Avenue, Suite B Cincinnati, Ohio 45208 U.S.A.
(72)**Name of Inventor :**
1)CARPENTER, Richard S.
2)BARNES, JoElla
3)CROCKETT, John Kennedy

(57) Abstract :
The present invention relates to a method of raising an aquatic animal in an aquaculture system, the method comprising: (a) contacting the aquaculture system with a water-treatment composition over a first period of time, wherein the water-treatment composition comprises Bacillus subtilis, Bacillus amyloliquefaciens, Bacillus licheniformis, Bacillus pumilus, Bacillus mojavensis, Pediococcus acidilactici, Pediococcus pentosaceus, and Lactobacillus plantarum; and (b) contacting the aquaculture system with a feed additive composition to feed the aquatic animal over a second period of time, wherein the feed additive composition comprises Pediococcus acidilactici, Pediococcus pentosaceus, Lactobacillus plantarum, and Bacillus subtilis 34KLB.

No. of Pages : 30 No. of Claims : 32

(12) PATENT APPLICATION PUBLICATION
(19) INDIA
(22) Date of filing of Application :15/12/2020

(21) Application No.202017054614 A
(43) Publication Date : 05/03/2021

(54) Title of the invention : ANALGESICS AND METHODS OF USE THEREOF

(51) International classification	:A61K0038000000, C07K0007640000, C07K0014000000, C08G0069100000, C07K0007060000
(31) Priority Document No	:2018901944
(32) Priority Date	:31/05/2018
(33) Name of priority country	:Australia
(86) International Application No	:PCT/AU2019/050550
Filing Date	:30/05/2019
(87) International Publication No	:WO 2019/227163
(61) Patent of Addition to Application Number	:NA
Filing Date	:NA
(62) Divisional to Application Number	:NA
Filing Date	:NA

(71)**Name of Applicant :**
1)THE UNIVERSITY OF SYDNEY
Address of Applicant :Parramatta Road Sydney, New South Wales 2006 Australia
2)THE UNIVERSITY OF QUEENSLAND
(72)**Name of Inventor :**
1)CHRISTIE, MacDonald
2)ALEWOOD, Paul
3)CAPON, Robert
4)DEKAN, Zoltan

(57) Abstract :
The present invention relates to peptides with alternating stereochemistry. In particular, the invention relates to peptides comprising alternating stereochemistry of (LDLD) in the first four amino acid residues. The invention further contemplates the use of peptides with alternating stereochemistry in treating pain.

No. of Pages : 119 No. of Claims : 128

(12) PATENT APPLICATION PUBLICATION
(21) Application No.202017054621 A
(19) INDIA
(22) Date of filing of Application :15/12/2020
(43) Publication Date : 05/03/2021

(54) Title of the invention : INDUSTRIAL PLANT IMAGE ANALYSIS DEVICE AND INDUSTRIAL PLANT MONITORING CONTROL SYSTEM

(51) International classification	:G06T0007000000, G05B0023020000, B21B0037460000, H04N0007180000, H04N0005232000
(31) Priority Document No	:NA
(32) Priority Date	:NA
(33) Name of priority country	:NA
(86) International Application No	:PCT/JP2018/019648
Filing Date	:22/05/2018
(87) International Publication No	:WO 2019/224906
(61) Patent of Addition to Application Number	:NA
Filing Date	:NA
(62) Divisional to Application Number	:NA
Filing Date	:NA

(71)**Name of Applicant :**
1)TOSHIBA MITSUBISHI-ELECTRIC INDUSTRIAL SYSTEMS CORPORATION
Address of Applicant :3-1-1, Kyobashi, Chuo-ku, Tokyo 1040031 Japan
(72)**Name of Inventor :**
1)FUJIEDA, Hiroyuki
2)KONISHI, Katsuhiro
3)WATANABE, Kenji

(57) Abstract :
An industrial plant image analysis device and an industrial plant monitoring control system which are provided with the following configurations. A moving image data collection unit (21) collects moving image data in real time, said moving image data capturing images of a device constituting an industrial plant and a material being processed by the device. An image processing unit (22) extracts an image from the moving image data at regular periodic intervals, and binarizes the image by converting a designated color into a first color and colors other than the designated color into a second color. An image quantification unit (23) quantifies the binarized image on the basis of the number of pixels converted to the fisrt color. A numerical value output unit (24) outputs quantified data.

No. of Pages : 32 No. of Claims : 5

(12) PATENT APPLICATION PUBLICATION
(19) INDIA
(22) Date of filing of Application :15/12/2020
(21) Application No.202017054622 A
(43) Publication Date : 05/03/2021

(54) Title of the invention : METHOD AND PLANT FOR MANUFACTURING CERAMIC PRODUCTS

(51) International classification	:B28B0003120000, B28B0011040000, B28B0013020000, B28B0011000000, B41J0003407000
(31) Priority Document No	:102018000006678
(32) Priority Date	:26/06/2018
(33) Name of priority country	:Italy
(86) International Application No	:PCT/IB2019/055407
Filing Date	:26/06/2019
(87) International Publication No	:WO 2020/003163
(61) Patent of Addition to Application Number	:NA
Filing Date	:NA
(62) Divisional to Application Number	:NA
Filing Date	:NA

(71)**Name of Applicant :**
1)SACMI COOPERATIVA MECCANICI IMOLA SOCIETA' COOPERATIVA
Address of Applicant :Via Selice Provinciale, 17/A 40026 Imola (BO) Italy
(72)**Name of Inventor :**
1)BOSI, Gildo
2)SCARDOVI, Stefano
3)RICCI, Claudio

(57) Abstract :
A method for manufacturing ceramic articles (2) is described comprising a step of feeding, during which at least two different ceramic powders are fed so as to obtain a strip (6) of ceramic powders having at least a first zone (7) and at least a second zone (8) having a given shape; a step of compacting, during which the strip (6) of ceramic powders is compacted so as to obtain a compacted layer (11) of ceramic powders, which is expanded relative to the strip (6) of ceramic powders; a step of determination, during which expansion of the layer (11) of powders is determined; and a step of printing, during which a decoration having a modified shape based on the given expansion is applied on the surface of the compacted layer (11) of ceramic powders.

No. of Pages : 30 No. of Claims : 19

(12) PATENT APPLICATION PUBLICATION
(19) INDIA
(22) Date of filing of Application :15/12/2020
(21) Application No.202017054623 A
(43) Publication Date : 05/03/2021

(54) Title of the invention : METHOD AND APPARATUS FOR ENCODING/DECODING IMAGES

(51) International classification	:H04N0019176000, H04N0019593000, H04N0019110000, H04N0019105000, H04N0019182000
(31) Priority Document No	:10-2018-0072560
(32) Priority Date	:25/06/2018
(33) Name of priority country	:Republic of Korea
(86) International Application No	:PCT/KR2019/007653
Filing Date	:25/06/2019
(87) International Publication No	:WO 2020/004902
(61) Patent of Addition to Application Number	:NA
Filing Date	:NA
(62) Divisional to Application Number	:NA
Filing Date	:NA

(71)**Name of Applicant :**
1)KIM, Ki Baek
Address of Applicant :205ho, 18dong, 282, Cheongsa-ro, Seo-gu, Daejeon 35206 Republic of Korea
(72)**Name of Inventor :**
1)KIM, Ki Baek

(57) Abstract :
A method and apparatus for encoding/decoding images according to the present invention may configure a prediction mode candidate group on a screen of a target block, determine a reference pixel for a prediction mode on the screen of the target block, perform at least one of filtering and interpolation on the reference pixel, and perform prediction on the screen of the target block on the basis of the prediction mode candidate group on the screen and the reference pixel.

No. of Pages : 160 No. of Claims : 8

(12) PATENT APPLICATION PUBLICATION
(19) INDIA
(22) Date of filing of Application :15/12/2020
(21) Application No.202017054624 A
(43) Publication Date : 05/03/2021

(54) Title of the invention : PLUNGER ROD AND ASSEMBLY HAVING MODIFIED THREAD GEOMETRY

(51) International classification	:A61M0005315000, A61F0002460000, F21V0029770000, F15B0015160000, F16K0003180000
(31) Priority Document No	:62/687992
(32) Priority Date	:21/06/2018
(33) Name of priority country	:U.S.A.
(86) International Application No	:PCT/US2019/038514
Filing Date	:21/06/2019
(87) International Publication No	:WO 2019/246543
(61) Patent of Addition to Application Number	:NA
Filing Date	:NA
(62) Divisional to Application Number	:NA
Filing Date	:NA

(71)**Name of Applicant :**
1)WEST PHARMACEUTICAL SERVICES, INC.
Address of Applicant :530 Herman O. West Drive Exton, PA 19341 U.S.A.
(72)**Name of Inventor :**
1)THOMPSON, James
2)Lauren Shafer Greenberg
3)SWEENEY, Matthew, Dylan

(57) Abstract :
A fluid-dispensing syringe includes a barrel and a plunger assembly disposed within the barrel. The assembly includes a piston with an outer piston surface, an inner piston cavity with an inner piston surface and at least one female thread, and proximal and distal piston ends. The plunger rod includes a rod body having proximal and distal rod ends, with a threaded extension extending distally from the distal rod end. The threaded extension extends distally along a distal length and threadedly engages the at least one female thread along a portion of the distal length. The threaded extension has a ventilation feature configured to create a ventilation space between the threaded extension and the inner piston surface. The proximal piston end and the distal rod end are in spaced relation to form a primary fluid passageway portion from outside of the plunger assembly into the piston cavity.

No. of Pages : 13 No. of Claims : 28

(12) PATENT APPLICATION PUBLICATION
(19) INDIA
(22) Date of filing of Application :15/12/2020
(21) Application No.202017054625 A
(43) Publication Date : 05/03/2021

(54) Title of the invention : RAPAMYCIN ANALOGS AND USES THEREOF

(51) International classification	:C07D0498180000, A61K0031436000, A61K0031705600, A61L0027540000, A61L0031160000
(31) Priority Document No	:62/685666
(32) Priority Date	:15/06/2018
(33) Name of priority country	:U.S.A.
(86) International Application No	:PCT/US2019/037507
Filing Date	:17/06/2019
(87) International Publication No	:WO 2019/241789
(61) Patent of Addition to Application Number	:NA
Filing Date	:NA
(62) Divisional to Application Number	:NA
Filing Date	:NA

(71)**Name of Applicant :**
1)NAVITOR PHARMACEUTICALS, INC.
Address of Applicant :1030 Massachusetts Avenue, Suite 410 Cambridge, Massachusetts 02138 U.S.A.
(72)**Name of Inventor :**
1)SAIAH, Eddine
2)O'NEILL, David, John
3)KANG, Seong Woo Anthony

(57) Abstract :
The present invention provides compounds, compositions thereof, and methods of using the same.

No. of Pages : 300 No. of Claims : 21

(12) PATENT APPLICATION PUBLICATION
(19) INDIA
(22) Date of filing of Application :15/12/2020

(21) Application No.202017054626 A
(43) Publication Date : 05/03/2021

(54) Title of the invention : MEASURING DEVICE WITH NEAR FIELD INTERACTION DEVICE

(51) International classification	:G01F0023284000, G01F0023296000, A61B0005000000, G16H0040630000, A61B0005145000
(31) Priority Document No	:18184810.2
(32) Priority Date	:20/07/2018
(33) Name of priority country	:EPO
(86) International Application No	:PCT/EP2019/069378
Filing Date	:18/07/2019
(87) International Publication No	:WO 2020/016361
(61) Patent of Addition to Application Number	:NA
Filing Date	:NA
(62) Divisional to Application Number	:NA
Filing Date	:NA

(71)**Name of Applicant :**
1)VEGA GRIESHABER KG
Address of Applicant :Hauptstrae 1-5 77709 Wolfach Germany
(72)**Name of Inventor :**
1)WELLE, Roland
2)B–RSIG, Jrg
3)W„LDE, Steffen

(57) Abstract :
The invention relates to measuring devices or display devices and to a method for operating said devices, in particular devices for measuring a fill level, determining a limit level, detecting the topology of a content surface, or displaying the measurement values of said devices. A measuring device or display device has an RFID unit. The RFID unit is designed to exchange data with a storage unit, activate and deactivate a controllable switch, and/or transmit energy to an energy store in response to an external command from an external communication device.

No. of Pages : 22 No. of Claims : 15

(12) PATENT APPLICATION PUBLICATION
(19) INDIA
(22) Date of filing of Application :15/12/2020
(21) Application No.202017054627 A
(43) Publication Date : 05/03/2021

(54) Title of the invention : PROCESS FOR THE PRODUCTION OF BIMODAL ETHYLENE-BASED POLYMERS HAVING HIGH MOLECULAR WEIGHT HIGH DENSITY FRACTIONS

(51) International classification	:C08L0023080000, C08F0004659000, C08F0210160000, C08L0023060000, C08J0005180000
(31) Priority Document No	:62/685536
(32) Priority Date	:15/06/2018
(33) Name of priority country	:U.S.A.
(86) International Application No	:PCT/US2019/036966
Filing Date	:13/06/2019
(87) International Publication No	:WO 2019/241515
(61) Patent of Addition to Application Number	:NA
Filing Date	:NA
(62) Divisional to Application Number	:NA
Filing Date	:NA

(71)**Name of Applicant :**
1)DOW GLOBAL TECHNOLOGIES LLC
Address of Applicant :2040 Dow Center Midland, Michigan 48674 U.S.A.
(72)**Name of Inventor :**
1)GAMBREL, Timothy W.
2)HYPOLITE, Curvel
3)RYNEARSON, Daniel S.
4)ZOGG, JR., Michael J.
5)HART, Kyle E.
6)TURNER, Michael D.
7)RUBALCABA, Jorge
8)JAIN, Pradeep
9)DEMIRORS, Mehmet

(57) Abstract :
A method of producing bimodal ethylene-based polymer includes reacting ethylene monomer and C3-C12 a-olefin comonomer in the presence of a first catalyst in an agitated reactor to produce a first polymer fraction, and outputting effluent from the agitated reactor. A second catalyst is added to the effluent downstream of the agitated reactor and upstream from a non-agitated reactor, the second catalyst facilitates production of a second polymer fraction having a density and melt index (I2) different from the first polymer fraction. The second catalyst and effluent are mixed in at least one mixer. The second catalyst, second polymer fraction, and the first polymer fraction are passed to the non-agitated reactor; and additional ethylene monomer, additional C3-C12 a-olefin comonomer, and solvent are passed to the non-agitated reactor to produce more second polymer fraction and thereby the bimodal ethylene-based polymer.

No. of Pages : 43 No. of Claims : 15

(12) PATENT APPLICATION PUBLICATION
(19) INDIA
(22) Date of filing of Application :15/12/2020
(21) Application No.202017054628 A
(43) Publication Date : 05/03/2021

(54) Title of the invention : CHEMICAL FOAMING AGENTS CONTAINING TOSYL GROUPS

(51) International classification	:C08J0009100000, C08J0009000000, H01B0003440000, C08J0009060000, C08J0009080000
(31) Priority Document No	:NA
(32) Priority Date	:NA
(33) Name of priority country	:NA
(86) International Application No	:PCT/CN2018/091433
Filing Date	:15/06/2018
(87) International Publication No	:WO 2019/237318
(61) Patent of Addition to Application Number	:NA
Filing Date	:NA
(62) Divisional to Application Number	:NA
Filing Date	:NA

(71)**Name of Applicant :**
1)DOW GLOBAL TECHNOLOGIES LLC
Address of Applicant :2040 Dow Center Midland, Michigan 48674 U.S.A.
2)SUN, Gangwei
3)CHEN, Hongyu
4)ESSEGHIR, Mohamed
5)FAN, Renhua
6)WANG, Shuo-En
(72)**Name of Inventor :**
1)SUN, Gangwei
2)CHEN, Hongyu
3)ESSEGHIR, Mohamed
4)FAN, Renhua
5)WANG, Shuo-En

(57) Abstract :
Chemical foaming agents having p-toluenesulfonyl groups. Processes for preparing foamed polyolefin compositions using chemical foaming agents having p-toluenesulfonyl groups. Articles of manufacture containing formed polyolefins prepared using chemical foaming agents having p-toluenesulfonyl groups.

No. of Pages : 20 No. of Claims : 10

(12) PATENT APPLICATION PUBLICATION
(19) INDIA
(22) Date of filing of Application :15/12/2020
(21) Application No.202017054646 A
(43) Publication Date : 05/03/2021

(54) Title of the invention : USE OF RILUZOLE ORAL DISINTIGRATING TABLETS FOR TREATING DISEASES

(51) International classification	:A61K0009000000, A61K0031428000, A61K0009200000, A61K0045060000, A61K0031443900
(31) Priority Document No	:62/677018
(32) Priority Date	:27/05/2018
(33) Name of priority country	:U.S.A.
(86) International Application No	:PCT/US2019/034081
Filing Date	:26/05/2019
(87) International Publication No	:WO 2019/231865
(61) Patent of Addition to Application Number	:NA
Filing Date	:NA
(62) Divisional to Application Number	:NA
Filing Date	:NA

(71)**Name of Applicant :**
1)BIOHAVEN PHARMACEUTICAL HOLDING COMPANY LTD.
Address of Applicant :215 Church Street New Haven, Connecticut 06510 U.S.A.
(72)**Name of Inventor :**
1)CORIC, Vladimir
2)BERMAN, Robert
3)QURESHI, Irfan

(57) Abstract :
Disclosed are methods of treating a disease in a patient in need thereof, comprising administering to the patient a pharmaceutical composition comprising a therapeutically effective amount of riluzole, or a pharmaceutically acceptable salt thereof, in the form of an oral solid molded fast-dispersing dosage form. Pharmaceutical compositions and kits are also disclosed.

No. of Pages : 68 No. of Claims : 12

(12) PATENT APPLICATION PUBLICATION
(19) INDIA
(22) Date of filing of Application :15/12/2020

(21) Application No.202017054647 A
(43) Publication Date : 05/03/2021

(54) Title of the invention : ADJUSTING A RESONANT FREQUENCY OF A SCANNING MIRROR

(51) International classification	:G02B0026100000, G02B0027010000, G02B0026080000, H04N0009310000, G02B0027000000
(31) Priority Document No	:16/020550
(32) Priority Date	:27/06/2018
(33) Name of priority country	:U.S.A.
(86) International Application No	:PCT/US2019/035165
Filing Date	:03/06/2019
(87) International Publication No	:WO 2020/005467
(61) Patent of Addition to Application Number	:NA
Filing Date	:NA
(62) Divisional to Application Number	:NA
Filing Date	:NA

(71)**Name of Applicant :**
1)MICROSOFT TECHNOLOGY LICENSING, LLC
Address of Applicant :One Microsoft Way Redmond, Washington 98052-6399 U.S.A.
(72)**Name of Inventor :**
1)CHAMPION, Mark Alan
2)BARAN, Utku
3)MILLER, Joshua Owen
4)DAVIS, Wyatt Owen
5)GIBSON, Gregory Theodore

(57) Abstract :
Examples are disclosed that relate to scanning display systems. One example provides a display device comprising a controller, a light source, and a scanning mirror system. The scanning mirror system comprises a scanning mirror configured to scan light from the light source in at least one direction at a resonant frequency of the scanning mirror, and an electromechanical actuator system coupled with the scanning mirror and being controllable by the controller to adjust the resonant frequency of the scanning mirror.

No. of Pages : 11 No. of Claims : 15

(12) PATENT APPLICATION PUBLICATION
(19) INDIA
(22) Date of filing of Application :15/12/2020

(21) Application No.202017054648 A
(43) Publication Date : 05/03/2021

(54) Title of the invention : ADAPTIVE SESSION LIFETIME

(51) International classification	:H04L0029060000, G06F0021310000, G06F0021510000, H04L0029080000, G06F0021550000
(31) Priority Document No	:16/019913
(32) Priority Date	:27/06/2018
(33) Name of priority country	:U.S.A.
(86) International Application No	:PCT/US2019/037132
Filing Date	:14/06/2019
(87) International Publication No	:WO 2020/005570
(61) Patent of Addition to Application Number	:NA
Filing Date	:NA
(62) Divisional to Application Number	:NA
Filing Date	:NA

(71)**Name of Applicant :**
1)MICROSOFT TECHNOLOGY LICENSING, LLC
Address of Applicant :One Microsoft Way Redmond, Washington 98052-6399 U.S.A.
(72)**Name of Inventor :**
1)BARHUDARIAN, Violet Anna
2)DRUMEA, George Adrian
3)WONG, Pui-Yin Winfred
4)KASHYAP, Radhika
5)MIRON, Titus Constantin
6)BAKER, Caleb

(57) Abstract :
Session lifetime can be adapted based on session reputation. Session reputation can be computed based on sign-in risk and device risk, among other things. Session lifetime corresponds to a length of time a session is valid and can be determined automatically based on the session reputation. Subsequently, a token can be generated and returned in response to successful authentication that identifies a session and is valid for the determined lifetime.

No. of Pages : 17 No. of Claims : 13

(12) PATENT APPLICATION PUBLICATION
(19) INDIA
(22) Date of filing of Application :15/12/2020

(21) Application No.202017054649 A
(43) Publication Date : 05/03/2021

(54) Title of the invention : SECURITY CONFIGURATION LIFECYCLE ACCOUNT PROTECTION FOR MINORS

(51) International classification	:H04L0029060000, G06F0021620000, G06F0021310000, G06F0021550000, G06Q0020380000
(31) Priority Document No	:16/022554
(32) Priority Date	:28/06/2018
(33) Name of priority country	:U.S.A.
(86) International Application No	:PCT/US2019/038353
Filing Date	:21/06/2019
(87) International Publication No	:WO 2020/005724
(61) Patent of Addition to Application Number	:NA
Filing Date	:NA
(62) Divisional to Application Number	:NA
Filing Date	:NA

(71)**Name of Applicant :**
1)MICROSOFT TECHNOLOGY LICENSING, LLC
Address of Applicant :One Microsoft Way Redmond, WA 98052-6399 U.S.A.
(72)**Name of Inventor :**
1)VINCENT, Benjamin
2)GORDON, Ariel

(57) Abstract :
Described technologies enhance cybersecurity and facilitate computing system account usage by configuring a primary account and a supplementary account together in a security configuration lifecycle. The primary account user may be a parent or other adult, while the supplementary account user may be a child or other person with less capacity than the primary user. Over time, the accounts may transition together through security configurations to give more capabilities to the supplementary user, e.g., login separate from the primary user, and to reduce the control of the primary user over the supplementary account. Security configuration lifecycle stages are implemented, e.g., using capability-security pair data structures and account security configuration code. Despite the security configuration linkage of the accounts, each account may have its own personalized content and its own recommendation history. Lifecycle position identification supports automatic reasoning to select an age-appropriate consent obtention procedure, and facilitates documentary media timeline creation.

No. of Pages : 45 No. of Claims : 15

(12) PATENT APPLICATION PUBLICATION
(19) INDIA
(22) Date of filing of Application :15/12/2020
(21) Application No.202017054650 A
(43) Publication Date : 05/03/2021

(54) Title of the invention : TABLE DETECTION IN SPREADSHEET

(51) International classification	:G06F0040180000, G06Q0010100000, G16H0050200000, G01N0033500000, G06F0040400000
(31) Priority Document No	:201810698750.9
(32) Priority Date	:29/06/2018
(33) Name of priority country	:China
(86) International Application No	:PCT/US2019/037414
Filing Date	:17/06/2019
(87) International Publication No	:WO 2020/005605
(61) Patent of Addition to Application Number	:NA
Filing Date	:NA
(62) Divisional to Application Number	:NA
Filing Date	:NA

(71)**Name of Applicant :**
1)MICROSOFT TECHNOLOGY LICENSING, LLC
Address of Applicant :One Microsoft Way Redmond, Washington 98052-6399 U.S.A.
(72)**Name of Inventor :**
1)DONG, Haoyu
2)HAN, Shi
3)FU, Zhouyu
4)ZHANG, Dongmei

(57) Abstract :
The subject matter described herein relates to table detection in a spreadsheet. According to implementations of the subject matter described herein, there is proposed a solution for determining a table in a spreadsheet. In the solution, respective multiple attributes of multiple cells comprised in the spreadsheet may be extracted. Respective features of the multiple cells may be determined based on the extracted multiple attributes. The multiple cells may be divided into at least one candidate area based on the features. At least one candidate table in the spreadsheet may be determined based on the at least one candidate area. By means of the solution, respective features of the multiple cells comprised in the spreadsheet may be determined based on the respective attributes of the multiple cells, and further, a candidate region where a table might exist may be determined based on the respective features of the multiple cells.

No. of Pages : 26 No. of Claims : 15

(12) PATENT APPLICATION PUBLICATION
(19) INDIA
(22) Date of filing of Application :15/12/2020

(21) Application No.202017054651 A
(43) Publication Date : 05/03/2021

(54) Title of the invention : REGISTRATION OF THE SAME DOMAIN WITH DIFFERENT CLOUD SERVICES NETWORKS

(51) International classification	:H04L0029060000, H04L0029080000, H04L0012240000, H04W0012060000, H04L0029120000
(31) Priority Document No	:62/692320
(32) Priority Date	:29/06/2018
(33) Name of priority country	:U.S.A.
(86) International Application No	:PCT/US2019/038363
Filing Date	:21/06/2019
(87) International Publication No	:WO 2020/005733
(61) Patent of Addition to Application Number	:NA
Filing Date	:NA
(62) Divisional to Application Number	:NA
Filing Date	:NA

(71)**Name of Applicant :**
1)MICROSOFT TECHNOLOGY LICENSING, LLC
Address of Applicant :One Microsoft Way Redmond, Washington 98052-6399 U.S.A.
(72)**Name of Inventor :**
1)APPIAH, Madan R.
2)CUPIAL, Maciej J.

(57) Abstract :
Embodiments described herein are directed to the registration of the same domain with different cloud services networks. For example, systems and methods described herein enable registering a domain in a cloud services network wherein the same domain is also concurrently registered in another cloud services network. Systems and methods described herein further enable selecting one of a plurality of cloud-based identity providers to process a request to authenticate a user associated with a domain that is registered in more than one cloud services network and generating an authentication response in accordance with the selection. Systems and methods described herein also enable the federation of user authentication requests from different cloud services networks to the same enterprise identity provider.

No. of Pages : 28 No. of Claims : 15

(12) PATENT APPLICATION PUBLICATION
(19) INDIA
(22) Date of filing of Application :15/12/2020

(21) Application No.202017054652 A
(43) Publication Date : 05/03/2021

(54) Title of the invention : USER AUTHENTICATION USING A COMPANION DEVICE

(51) International classification	:H04L0009320000, H04L0029060000, H04W0012060000, G06F0021350000, G06Q0020400000
(31) Priority Document No	:62/691246
(32) Priority Date	:28/06/2018
(33) Name of priority country	:U.S.A.
(86) International Application No	:PCT/US2019/038359
Filing Date	:21/06/2019
(87) International Publication No	:WO 2020/005729
(61) Patent of Addition to Application Number	:NA
Filing Date	:NA
(62) Divisional to Application Number	:NA
Filing Date	:NA

(71)**Name of Applicant :**
1)MICROSOFT TECHNOLOGY LICENSING, LLC
Address of Applicant :One Microsoft Way Redmond, Washington 98052-6399 U.S.A.
(72)**Name of Inventor :**
1)SHAH, Samir Vasantbhai
2)HE, Jia Le

(57) Abstract :
User authentication techniques that use a companion device associated with a mobile computing device are described. The companion device receives a user authentication request from a user authentication service via the mobile computing device, displays information related to the user authentication request, receives an approval of the user authentication request, and transmits the approval of the user authentication request to the service via the mobile computing device. In one embodiment, after transmitting the approval, the companion device receives a token from the mobile computing device that includes a value obtained from the service, signs the token with a private key of a securely-stored signing key pair and provides the signed token to the service via the mobile computing device. In another embodiment, after the companion device transmits the approval to the mobile computing device, the mobile computing device provides a personal identification code from secure storage to the service.

No. of Pages : 32 No. of Claims : 15

(12) PATENT APPLICATION PUBLICATION
(19) INDIA
(22) Date of filing of Application :15/12/2020

(21) Application No.202017054653 A
(43) Publication Date : 05/03/2021

(54) Title of the invention : PERIPHERAL DEVICE WITH RESOURCE ISOLATION

(51) International classification	:G06F0013100000, G06F0021730000, G06F0009440100, G06F0021800000, G06F0012100900
(31) Priority Document No	:16/023965
(32) Priority Date	:29/06/2018
(33) Name of priority country	:U.S.A.
(86) International Application No	:PCT/US2019/037597
Filing Date	:18/06/2019
(87) International Publication No	:WO 2020/005637
(61) Patent of Addition to Application Number	:NA
Filing Date	:NA
(62) Divisional to Application Number	:NA
Filing Date	:NA

(71)**Name of Applicant :**
1)MICROSOFT TECHNOLOGY LICENSING, LLC
Address of Applicant :One Microsoft Way Redmond, Washington 98052-6399 U.S.A.
(72)**Name of Inventor :**
1)VOLOS, Stavros
2)VASWANI, Kapil

(57) Abstract :
A peripheral device package for use in a host computing device has a plurality of compute elements and a plurality of resources shared by the plurality of compute elements. A datastructure is stored in a hidden memory of the peripheral device package. The data structure holds metadata about ownership of resources of the peripheral device package by a plurality of user runtime processes of the host computing device which use the compute elements. At least one of the user runtime processes is a secure user runtime process. The peripheral device package has a command processor configured to use the datastructure to enforce isolation of the resources used by the secure user runtime process.

No. of Pages : 32 No. of Claims : 15

(12) PATENT APPLICATION PUBLICATION
(19) INDIA
(22) Date of filing of Application :16/12/2020
(21) Application No.202017054669 A
(43) Publication Date : 05/03/2021

(54) Title of the invention : GLAZING COMPRISING A STACK OF THIN LAYERS ACTING ON SOLAR RADIATION AND A BARRIER LAYER

(51) International classification	:C03C0017360000, C03C0017340000, C03B0033090000, C03C0017220000, B23K0026400000
(31) Priority Document No	:1855763
(32) Priority Date	:27/06/2018
(33) Name of priority country	:France
(86) International Application No	:PCT/FR2019/051592
Filing Date	:27/06/2019
(87) International Publication No	:WO 2020/002845
(61) Patent of Addition to Application Number	:NA
Filing Date	:NA
(62) Divisional to Application Number	:NA
Filing Date	:NA

(71)**Name of Applicant :**
1)SAINT-GOBAIN GLASS FRANCE
Address of Applicant :12 place de l'Iris Tour Saint-Gobain 92400 Courbevoie France
(72)**Name of Inventor :**
1)BRALEY, Carole

(57) Abstract :
The invention relates to a transparent substrate (S), in particular made of glass, comprising a stack (10) of thin layers acting on solar radiation, said stack including at least one functional layer (11) which is associated with at least one barrier underlayer (12), characterized in that said barrier underlayer is a silicon dioxide layer with a thickness between 15 and 25 nm.

No. of Pages : 7 No. of Claims : 12

(12) PATENT APPLICATION PUBLICATION
(21) Application No.202017054693 A
(19) INDIA
(22) Date of filing of Application :16/12/2020
(43) Publication Date : 05/03/2021

(54) Title of the invention : USER EQUIPMENT USED FOR WIRELESS COMMUNICATION AND METHOD AND DEVICE OF BASE STATION

(51) International classification	:H04L0005000000, H04W0072040000, H04W0072120000, H04W0074080000, H04L0027260000
(31) Priority Document No	:NA
(32) Priority Date	:NA
(33) Name of priority country	:NA
(86) International Application No	:PCT/CN2018/088675
Filing Date	:28/05/2018
(87) International Publication No	:WO 2019/227280
(61) Patent of Addition to Application Number	:NA
Filing Date	:NA
(62) Divisional to Application Number	:NA
Filing Date	:NA

(71)**Name of Applicant :**
1)SHANGHAI LANGBO COMMUNICATION TECHNOLOGY COMPANY LIMITED
Address of Applicant :Room A2117, Building B, No.555, East Chuan Road, Minhang District Shanghai 200240 China
(72)**Name of Inventor :**
1)ZHANG, Xiaobo
2)YANG, Lin

(57) Abstract :
The present application discloses user equipment used for wireless communication and a method and device of a base station. The method comprises: a first node receiving T first type wireless signals; respectively performing T times of access detection on T sub-frequency bands, and respectively transmitting T second type wireless signals in T time-frequency resource blocks; and respectively performing Q times of energy detection in Q time sub-pools on a first sub frequency band, so as to obtain Q detection values; wherein each of the T sub-frequency bands comprises at least one same frequency, or the T sub-frequency bands all belong to a same carrier; wherein at least one sub-frequency band among the T sub-frequency bands is different from the first sub-frequency band; wherein the selection of a reference time-frequency resource block is related to the first sub-frequency band and at least one reference sub-frequency band; wherein the first node is a base station, or the first node is user equipment.

No. of Pages : 83 No. of Claims : 10

(12) PATENT APPLICATION PUBLICATION
(19) INDIA
(22) Date of filing of Application :16/12/2020

(21) Application No.202017054694 A
(43) Publication Date : 05/03/2021

(54) Title of the invention : METHOD AND SYSTEM FOR PROCESSING POULTRY PORTIONS

(51) International classification	:B26D0005000000, A22C0021000000, A22C0017000000, B26D0005320000, B26D0005340000
(31) Priority Document No	:1810055.2
(32) Priority Date	:19/06/2018
(33) Name of priority country	:U.K.
(86) International Application No	:PCT/GB2019/051718
Filing Date	:19/06/2019
(87) International Publication No	:WO 2019/243812
(61) Patent of Addition to Application Number	:NA
Filing Date	:NA
(62) Divisional to Application Number	:NA
Filing Date	:NA

(71)**Name of Applicant :**
1)ISHIDA EUROPE LIMITED
Address of Applicant :11 Kettles Wood Drive Woodgate Business Park Birmingham West Midlands B32 3DB U.K.
(72)**Name of Inventor :**
1)NIELSEN, Ulrich Carlin

(57) Abstract :
A method of processing poultry portions is disclosed. The method comprises: determining at a control unit a target weight of a cut poultry portion; inspecting a poultry portion using an inspection unit to determine a mass distribution of said poultry portion and providing said mass distribution to the control unit; calculating a cutting plan of the poultry portion based on the target weight and the mass distribution using the control unit; using a mechanical gripper so as to grip the poultry portion and arrange said poultry portion for execution of the cutting plan; and cutting the poultry portion using a cutting unit in accordance with the cutting plan so as to produce a cut poultry portion in accordance with the target weight. A corresponding system for processing poultry portions is also disclosed.

No. of Pages : 22 No. of Claims : 32

(12) PATENT APPLICATION PUBLICATION
(19) INDIA
(22) Date of filing of Application :16/12/2020
(21) Application No.202017054695 A
(43) Publication Date : 05/03/2021

(54) Title of the invention : CRYSTAL MODIFICATIONS OF ODEVIXIBAT

(51) International classification	:C07D0285360000, A61P0001000000, A61P0003100000, A61P0003060000, A61P0001160000
(31) Priority Document No	:1850761-6
(32) Priority Date	:20/06/2018
(33) Name of priority country	:Sweden
(86) International Application No	:PCT/SE2019/050602
Filing Date	:20/06/2019
(87) International Publication No	:WO 2019/245448
(61) Patent of Addition to Application Number	:NA
Filing Date	:NA
(62) Divisional to Application Number	:NA
Filing Date	:NA

(71)**Name of Applicant :**
1)ALBIREO AB
Address of Applicant :Arvid Wallgrens backe 20 413 46 Gteborg Sweden
(72)**Name of Inventor :**
1)LUNDQVIST, Robert
2)YM‰N, Ingvar
3)BOHLIN, Martin
4)BYR–D, Eva
5)GILLBERG, Per-Gran
6)TIVERT, Anna-Maria
7)BRYLAND, Rikard
8)DAHLQUIST, Ann-Charlotte
9)ELVERSSON, Jessica
10)GUSTAFSSON, Nils Ove

(57) Abstract :
The present invention relates to crystal modifications of 1,1-dioxo-3,3-dibutyl-5-phenyl-7- methylthio-8-(N-{(R)-a-[N-((S)-1-carboxypropyl)carbamoyl]-4-hydroxybenzyl}carbamoylmethoxy)- 2,3,4,5-tetrahydro-1,2,5-benzothiadiazepine (odevixibat), more specifically crystal modifications and 2 of odevixibat. The invention also relates toa process for the preparation of crystal modification 1 of odevixibat, toa pharmaceutical composition comprising crystal modification 1, and to the use of this crystal modification in the treatment of various conditionsas described herein.

No. of Pages : 72 No. of Claims : 31

(12) PATENT APPLICATION PUBLICATION
(21) Application No.202017054709 A
(19) INDIA
(22) Date of filing of Application :16/12/2020
(43) Publication Date : 05/03/2021

(54) Title of the invention : MICROBUBBLE SOLUTION PRODUCING DEVICE, MICROBUBBLE SOLUTION PRODUCING METHOD, AND OZONE MICROBUBBLE SOLUTION

(51) International classification	:B01F0003040000, B01J0004000000, H05B0033140000, A61L0009010000, B01F0005000000
(31) Priority Document No	:2018-110114
(32) Priority Date	:08/06/2018
(33) Name of priority country	:Japan
(86) International Application No	:PCT/JP2019/000808
Filing Date	:14/01/2019
(87) International Publication No	:WO 2019/234962
(61) Patent of Addition to Application Number	:NA
Filing Date	:NA
(62) Divisional to Application Number	:NA
Filing Date	:NA

(71)**Name of Applicant :**
1)OPT CREATION INC.
Address of Applicant :1-1-40, Suehiro-cho, Tsurumi-ku, Yokohama-city, Kanagawa 2300045 Japan
(72)**Name of Inventor :**
1)IIDA Junichi
2)KOIDE Minoru

(57) Abstract :
Provided are: a microbubble solution producing device which has a simple configuration for attaching or fixing nozzles and which is capable of easily adjusting or changing the arrangement and specification of the nozzles; a microbubble solution producing method; and a microbubble solution generated by the microbubble solution producing method. The microbubble solution producing device according to one embodiment of the present invention includes an entrance means, a source liquid circulation means, a gas supply means, a plurality of nozzles, and an exit means, said device being characterized in that the plurality of nozzles is interchangeably attached to the source liquid circulation means in a direction intersecting the same, at least one of the plurality of nozzles is selected from nozzles of a plurality of types of specifications prepared in advance, and the device produces a microbubble solution that contains microbubbles having a predetermined particle size according to the specification of the nozzle.

No. of Pages : 43 No. of Claims : 21

(12) PATENT APPLICATION PUBLICATION
(19) INDIA
(22) Date of filing of Application :16/12/2020
(21) Application No.202017054723 A
(43) Publication Date : 05/03/2021

(54) Title of the invention : METHOD FOR MANUFACTURING PRESS-FORMED PRODUCT, AND MANUFACTURING FACILITY

(51) International classification	:B21D0022260000, B21D0005010000, B21D0022200000, B21D0053880000, B33Y0010000000
(31) Priority Document No	:2018-124149
(32) Priority Date	:29/06/2018
(33) Name of priority country	:Japan
(86) International Application No	:PCT/JP2019/025773
Filing Date	:28/06/2019
(87) International Publication No	:WO 2020/004610
(61) Patent of Addition to Application Number	:NA
Filing Date	:NA
(62) Divisional to Application Number	:NA
Filing Date	:NA

(71)**Name of Applicant :**
1)NIPPON STEEL CORPORATION
Address of Applicant :6-1, Marunouchi 2-chome, Chiyoda-ku, Tokyo 1008071 Japan
(72)**Name of Inventor :**
1)OISHI Takuya
2)TOYOKAWA Shin
3)TANAKA Yasuharu

(57) Abstract :
The present invention provides a method for manufacturing a press-formed product, wherein a press-formed product (10) includes a top plate portion (11), a longitudinal wall portion (12), and a flange portion (13), and the height from the flange portion (13) to the top plate portion (11) changes from a first product height H1 to a second product height H2, between a first forming position P1 and a second forming position P2, and wherein, in a first step, an intermediate product is manufactured by machining a blank, the intermediate product satisfying the following relationships, first intermediate longitudinal wall linear length d1/first longitudinal wall linear length D1: 0.80 to 1.20, second intermediate longitudinal wall linear length d2/second longitudinal wall linear length D2: 0.80 to 1.20, and second formed height h2/first formed height h1: 0.80 to 1.20, and in a second step, the press-formed product (10) is manufactured by machining the intermediate product.

No. of Pages : 41 No. of Claims : 3

(12) PATENT APPLICATION PUBLICATION
(19) INDIA
(22) Date of filing of Application :16/12/2020
(21) Application No.202017054725 A
(43) Publication Date : 05/03/2021

(54) Title of the invention : SYNTHETIC FIBER, FIBER TREATMENT AGENT, AND USE THEREOF

(51) International classification	:A61K0008600000, A61K0008860000, C08K0005103000, C10M0169040000, D06M0015530000
(31) Priority Document No	:2018-106097
(32) Priority Date	:01/06/2018
(33) Name of priority country	:Japan
(86) International Application No	:PCT/JP2019/030168
Filing Date	:01/08/2019
(87) International Publication No	:WO 2019/230993
(61) Patent of Addition to Application Number	:NA
Filing Date	:NA
(62) Divisional to Application Number	:NA
Filing Date	:NA

(71)**Name of Applicant :**
1)TOYOBO CO., LTD.
Address of Applicant :2-8, Dojima Hama 2-chome, Kita-ku, Osaka-shi, Osaka 5308230 Japan
(72)**Name of Inventor :**
1)JIZODO, Shinichi
2)NOGUCHI, Shuji
3)YAMAMOTO, Shuhei

(57) Abstract :
The purpose of the present invention is to provide a highly hydrophilic synthetic fiber. The present invention pertains to a synthetic fiber in which (a) mannosylerythritol lipid (MEL) and (b) at least one glycerin compound selected from the group consisting of (poly)glycerin, (poly)glycerin fatty acid ester, and (poly)glycerin alkylene oxide adduct are adhered to the surface of the fiber.

No. of Pages : 34 No. of Claims : 6

(12) PATENT APPLICATION PUBLICATION
(19) INDIA
(22) Date of filing of Application :16/12/2020
(21) Application No.202017054729 A
(43) Publication Date : 05/03/2021

(54) Title of the invention : METHOD FOR PRODUCING A-AZIDOANILINE DERIVATIVE OR A, A'-DIAZIDE DERIVATIVE

(51) International classification	:H01L0051000000, C07B0061000000, C07D0213840000, C07D0311940000, G03G0005060000
(31) Priority Document No	:2018-122811
(32) Priority Date	:28/06/2018
(33) Name of priority country	:Japan
(86) International Application No	:PCT/JP2019/023333
Filing Date	:12/06/2019
(87) International Publication No	:WO 2020/004043
(61) Patent of Addition to Application Number	:NA
Filing Date	:NA
(62) Divisional to Application Number	:NA
Filing Date	:NA

(71)**Name of Applicant :**
1)TOKUYAMA CORPORATION
Address of Applicant :1-1, Mikage-cho, Shunan-shi, Yamaguchi 7458648 Japan
(72)**Name of Inventor :**
1)SEKI Masahiko

(57) Abstract :
The present invention provides a method which uses an aniline derivative as a starting material, and which is capable of producing an a-azidoaniline derivative or an a, a'-diazide derivative. The present invention comprises a method for producing an a-azidoaniline derivative represented by formula (2) or an a, a'-diazide derivative by bringing an aniline derivative represented by formula (1) and an azidizing agent into contact with each other in the presence of water, a persulfuric acid salt and a copper compound. (In formula (1), each one of R1 to R5 independently represents a hydrogen atom, a halogen atom, a nitro group, a cyano group, a substituted or unsubstituted alkyl group having 1-12 carbon atoms, a substituted or unsubstituted alkoxy group having 1-12 carbon atoms, a substituted or unsubstituted aralkyl group having 7-14 carbon atoms, a substituted or unsubstituted aryl group having 2-13 carbon atoms, a substituted or unsubstituted alkoxycarbonyl group having 2-7 carbon atoms, or a substituted or unsubstituted carbonyl group having 1-20 carbon atoms; or alternatively, adjacent moieties among R1 to R5 may combine together to form an aliphatic hydrocarbon ring, an aromatic ring or a heterocyclic ring. In formula (2), R1 to R3 and R5 are the same as R1 to R3 and R5 in formula (1); and R4 represents an azide group (N3), or is the same as R4 in formula (1).)

No. of Pages : 68 No. of Claims : 10

(12) PATENT APPLICATION PUBLICATION
(19) INDIA
(22) Date of filing of Application :16/12/2020

(21) Application No.202017054730 A
(43) Publication Date : 05/03/2021

(54) Title of the invention : POLYNUCLEOTIDES, REAGENTS, AND METHODS FOR NUCLEIC ACID HYBRIDIZATION

(51) International classification	:C12Q0001686900, C40B0030100000, C12N0015100000, G16B0040100000, C12Q0001687600
(31) Priority Document No	:62/673704
(32) Priority Date	:18/05/2018
(33) Name of priority country	:U.S.A.
(86) International Application No	:PCT/US2019/032992
Filing Date	:17/05/2019
(87) International Publication No	:WO 2019/222706
(61) Patent of Addition to Application Number	:NA
Filing Date	:NA
(62) Divisional to Application Number	:NA
Filing Date	:NA

(71)**Name of Applicant :**
1)TWIST BIOSCIENCE CORPORATION
Address of Applicant :455 Mission Bay Boulevard South, Suite 545 San Francisco, CA 94158 U.S.A.
(72)**Name of Inventor :**
1)ZEITOUN, Ramsey, Ibrahim
2)CHEN, Siyuan
3)GANTT, Richard
4)BUTCHER, Kristin, D.
5)CHILTON, E., Hutson

(57) Abstract :
Provided herein are compositions, methods and systems relating to libraries of polynucleotides such that the libraries allow for accurate and efficient hybridization after binding to target sequences. Further provided herein are probes, blockers, additives, buffers, and methods that result in improved hybridization. Such compositions and methods are useful for improvement of Next Generation Sequencing applications, such as reducing off-target binding or reducing workflow times.

No. of Pages : 108 No. of Claims : 16

(12) PATENT APPLICATION PUBLICATION
(21) Application No.202017054733 A
(19) INDIA
(22) Date of filing of Application :16/12/2020
(43) Publication Date : 05/03/2021

(54) Title of the invention : SYSTEM FOR CONTROLLING A SWITCH, SWITCHING ARM AND ELECTRICAL INSTALLATION

(51) International classification	:B60W0010060000, H02P0029000000, G05D0001000000, H04N0021238700, B60R0016030000	(71)**Name of Applicant :** **1)VALEO EQUIPEMENTS ELECTRIQUES MOTEUR** Address of Applicant :2 rue Andr Boulle 94046 CRETEIL CEDEX France
(31) Priority Document No	:1855896	(72)**Name of Inventor :** **1)LAHBIL, Hicham**
(32) Priority Date	:28/06/2018	**2)MORVANY, Romuald**
(33) Name of priority country	:France	
(86) International Application No	:PCT/EP2019/067464	
Filing Date	:28/06/2019	
(87) International Publication No	:WO 2020/002670	
(61) Patent of Addition to Application Number	:NA	
Filing Date	:NA	
(62) Divisional to Application Number	:NA	
Filing Date	:NA	

(57) Abstract :
The invention relates to a control system comprising: a microcontroller (242) designed to receive a mode request (MR) and implementing a command-generating device (244) designed to supply commands (cmd) and to transfer the mode request (MS) to an output pin of the microcontroller (242), and a device for detecting accidental starting (258); as well as a pilot (260) designed to supply an output command signal (CMD; (I)) to the switch (222; 224), the pilot (260) being connected to the output pin in order to receive the transmitted mode request (MS). The output pin is connected to an input pin of the microcontroller (242) in order to receive the transmitted mode request (MS), and the accidental starting detection device (258) is designed to detect when the transmitted mode request (MS) received on the input pin indicates a motor mode even though the mode request (MR) received by the microcontroller (242) indicates an alternator mode and, when this is the case, to send an inhibition command (INHIB_P; INHIB_T) to the pilot (260).

No. of Pages : 19 No. of Claims : 12

(12) PATENT APPLICATION PUBLICATION
(19) INDIA
(22) Date of filing of Application :16/12/2020
(21) Application No.202017054736 A
(43) Publication Date : 05/03/2021

(54) Title of the invention : METHOD AND SYSTEM FOR OPPORTUNISTIC LOAD BALANCING IN NEURAL NETWORKS USING METADATA

(51) International classification	:G06N0003080000, G06N0003040000, G06F0009500000, G06N0003063000, G06F0009480000
(31) Priority Document No	:16/019374
(32) Priority Date	:26/06/2018
(33) Name of priority country	:U.S.A.
(86) International Application No	:PCT/US2019/033247
Filing Date	:21/05/2019
(87) International Publication No	:WO 2020/005412
(61) Patent of Addition to Application Number	:NA
Filing Date	:NA
(62) Divisional to Application Number	:NA
Filing Date	:NA

(71)**Name of Applicant :**
1)ADVANCED MICRO DEVICES, INC.
Address of Applicant :2485 Augustine Drive Santa Clara, CA 95054 U.S.A.
(72)**Name of Inventor :**
1)MALAYA, Nicholas
2)ECKERT, Yasuko

(57) Abstract :
Methods and systems for opportunistic load balancing in deep neural networks (DNNs) using metadata. Representative computational costs are captured, obtained or determined for a given architectural, functional or computational aspect of a DNN system. The representative computational costs are implemented as metadata for the given architectural, functional or computational aspect of the DNN system. In an implementation, the computed computational cost is implemented as the metadata. A scheduler detects whether there are neurons in subsequent layers that are ready to execute. The scheduler uses the metadata and neuron availability to schedule and load balance across compute resources and available resources.

No. of Pages : 17 No. of Claims : 20

(12) PATENT APPLICATION PUBLICATION
(19) INDIA
(22) Date of filing of Application :16/12/2020
(21) Application No.202017054738 A
(43) Publication Date : 05/03/2021

(54) Title of the invention : SYSTEMS AND METHODS FOR PROCESSING PURCHASE TRANSACTIONS USING A MOBILE DEVICE

(51) International classification	:G06Q0020320000, G06Q0020380000, G06Q0020400000, G06Q0020340000, G06Q0020200000
(31) Priority Document No	:16/015098
(32) Priority Date	:21/06/2018
(33) Name of priority country	:U.S.A.
(86) International Application No	:PCT/US2019/038338
Filing Date	:20/06/2019
(87) International Publication No	:WO 2019/246462
(61) Patent of Addition to Application Number	:NA
Filing Date	:NA
(62) Divisional to Application Number	:NA
Filing Date	:NA

(71)**Name of Applicant :**
1)PAG FINANCIAL INTERNATIONAL LLC
Address of Applicant :101 San Patricio Ave. Maramar Plaza Suite 1310 Guaynabo, PR 00968 U.S.A.
(72)**Name of Inventor :**
1)AGARWAL, Pavan
2)SANCHEZ, Gabriel, Albors
3)RIVERA, Jonathan, Ortiz

(57) Abstract :
Systems and methods are provided for enabling an ecommerce purchase transaction on a mobile device without requiring a user to enter payment card information during each transaction. A payment card token may be generated by the mobile payment application in response to receiving payment card information associated with a payment card. A unique user code associated with the payment card token may be generated. A payment card token may be communicated via a magnetic stripe reader communicatively coupled to the mobile device. The ecommerce purchase transaction may be completed by sending the payment card token from the mobile device to an online merchant upon entering the requisite unique user code.

No. of Pages : 25 No. of Claims : 18

(12) PATENT APPLICATION PUBLICATION
(19) INDIA
(22) Date of filing of Application :16/12/2020
(21) Application No.202017054741 A
(43) Publication Date : 05/03/2021

(54) Title of the invention : INFLATABLE PORTS, CATHETER ASSEMBLIES INCLUDING INFLATABLE PORTS, AND METHODS THEREOF

(51) International classification	:A61M0039020000, A61B0017120000, A61M0025100000, A61M0025000000, A61M0025040000
(31) Priority Document No	:62/687433
(32) Priority Date	:20/06/2018
(33) Name of priority country	:U.S.A.
(86) International Application No	:PCT/US2019/038321
Filing Date	:20/06/2019
(87) International Publication No	:WO 2019/246448
(61) Patent of Addition to Application Number	:NA
Filing Date	:NA
(62) Divisional to Application Number	:NA
Filing Date	:NA

(71)**Name of Applicant :**
1)C.R. BARD, INC.
Address of Applicant :IP LAW GROUP 1 Becton Drive, M/C 110 IP Ops Franklin Lakes, NJ 07417 U.S.A.
(72)**Name of Inventor :**
1)EVANS, John, G.

(57) Abstract :
An inflatable port including a housing, a chamber in the housing, a septum over the chamber, a hollow stem extending from the housing, and a bladder around at least a portion of the housing. The chamber has a major opening and a minor opening. The septum is positioned over the major opening of the chamber and is fixed to the housing. The stem fluidly connects to the chamber by way of the minor opening of the chamber. The bladder is configured to increase a size of the inflatable port upon inflation of the bladder and decrease the size of the inflatable port upon deflation of the bladder. Also disclosed herein is a catheter assembly including the inflatable port, as well as a method related to the foregoing inflatable port and catheter assembly.

No. of Pages : 11 No. of Claims : 20

(12) PATENT APPLICATION PUBLICATION
(19) INDIA
(22) Date of filing of Application :16/12/2020

(21) Application No.202017054754 A
(43) Publication Date : 05/03/2021

(54) Title of the invention : GRAPHICS RENDERING WITH ENCODER FEEDBACK

(51) International classification	:G06T0015000000, H04L0029080000, G06F0003140000, H04L0001180000, G06F0012020000
(31) Priority Document No	:15/993074
(32) Priority Date	:30/05/2018
(33) Name of priority country	:U.S.A.
(86) International Application No	:PCT/IB2019/052608
Filing Date	:29/03/2019
(87) International Publication No	:WO 2019/229547
(61) Patent of Addition to Application Number	:NA
Filing Date	:NA
(62) Divisional to Application Number	:NA
Filing Date	:NA

(71)**Name of Applicant :**
1)ATI TECHNOLOGIES ULC
Address of Applicant :One Commerce Valley Drive East Markham, Ontario L3T 7X6 Canada
(72)**Name of Inventor :**
1)LIU, Yang
2)AMER, Ihab
3)SINES, Gabor
4)IVANOVIC, Boris
5)QIU, Jinbo

(57) Abstract :
A feedback processing module [200] includes a memory [220] configured to store feedback [205] received from an encoder [125]. The feedback includes parameters associated with encoded graphics content generated by a graphics engine [105]. The feedback processing module also includes a processor [215] configured to generate configuration information for the graphics engine based on the feedback. The graphics engine is configured to execute a workload based on the configuration information. In some cases, the feedback processing module is also configured to receive feedback from a decoder that is used to decode the graphics content that is encoded by the encoder and generate the configuration information based on the feedback received from the decoder.

No. of Pages : 13 No. of Claims : 15

(12) PATENT APPLICATION PUBLICATION
(19) INDIA
(22) Date of filing of Application :16/12/2020

(21) Application No.202017054767 A
(43) Publication Date : 05/03/2021

(54) Title of the invention : PROTECTIVE BARRIER COATING AND INK

(51) International classification	:D21H0019320000, D21H0017570000, D21H0019160000, D21H0019400000, D21H0027300000
(31) Priority Document No	:62/677282
(32) Priority Date	:29/05/2018
(33) Name of priority country	:U.S.A.
(86) International Application No	:PCT/US2019/033273
Filing Date	:21/05/2019
(87) International Publication No	:WO 2019/231755
(61) Patent of Addition to Application Number	:NA
Filing Date	:NA
(62) Divisional to Application Number	:NA
Filing Date	:NA

(71)**Name of Applicant :**
1)SONOCO DEVELOPMENT, INC
Address of Applicant :North Second Street, Hartsville, South Carolina 29550, United States of America U.S.A.
(72)**Name of Inventor :**
1)LINTZ, Aaron Edward
2)LINTZ, Aaron Edward
3)KELLEY, Kevin Manly

(57) Abstract :
A paperboard carrier (10) suitable for use with textiles (20) may include one or more strips (32) of paperboard secured together to form a hollow tubular body, the body having an outer surface (14), and a coating (50) covering some or all of the outer surface (14). The coating (50) may comprise a coating agent such as a silicon resin dispersed in a solvent such as isopropyl alcohol but little or no water. The coating (50) may be applied to the outer surface (14) by using a plurality spray nozzles (40) arranged axially or circumferentially about the carrier (10).

No. of Pages : 22 No. of Claims : 20

(12) PATENT APPLICATION PUBLICATION
(19) INDIA
(22) Date of filing of Application :16/12/2020
(21) Application No.202017054768 A
(43) Publication Date : 05/03/2021

(54) Title of the invention : ELECTRONIC DEVICE, AND METHOD FOR CONTROLLING ELECTRONIC DEVICE

(51) International classification	:G06F0003048400, G06F0003048800, G06F0003023000, B60T0013660000, G06F0003010000
(31) Priority Document No	:10-2018-0080234
(32) Priority Date	:10/07/2018
(33) Name of priority country	:Republic of Korea
(86) International Application No	:PCT/KR2019/008512
Filing Date	:10/07/2019
(87) International Publication No	:WO 2020/013615
(61) Patent of Addition to Application Number	:NA
Filing Date	:NA
(62) Divisional to Application Number	:NA
Filing Date	:NA

(71)**Name of Applicant :**
1)SAMSUNG ELECTRONICS CO., LTD.
Address of Applicant :129, Samsung-ro, Yeongtong-Gu, Suwon-Si, Gyeonggi-do 16677 Republic of Korea
(72)**Name of Inventor :**
1)YANG, Hejung
2)YU, Jisang
3)LEE, Sangwon
4)LEE, Indong
5)LIM, Haengsun

(57) Abstract :
Disclosed is an electronic device. A method for controlling the disclosed electronic device may perform: an operation for displaying at least one sentence; an operation for analyzing the sentence, when a user input for at least one character of the displayed sentence is received, by using the at least one character and the sentence including the at least one character; an operation for selecting a set of characters included in the sentence according to the result of the analysis; and an operation for displaying the selected set of characters so as to be distinguishable from the other characters included in the sentence.

No. of Pages : 40 No. of Claims : 14

(12) PATENT APPLICATION PUBLICATION
(21) Application No.202017054771 A
(19) INDIA
(22) Date of filing of Application :16/12/2020
(43) Publication Date : 05/03/2021

(54) Title of the invention : DISPLAY CONTROL DEVICE, DISPLAY CONTROL METHOD, AND DISPLAY CONTROL PROGRAM

(51) International classification	:B60R0001000000, H02J0013000000, G06T0001000000, G01R0021133000, G01R0021000000
(31) Priority Document No	:2018-122096
(32) Priority Date	:27/06/2018
(33) Name of priority country	:Japan
(86) International Application No	:PCT/JP2019/023833
Filing Date	:17/06/2019
(87) International Publication No	:WO 2020/004101
(61) Patent of Addition to Application Number	:NA
Filing Date	:NA
(62) Divisional to Application Number	:NA
Filing Date	:NA

(71)**Name of Applicant :**
1)K.K. CYBO
Address of Applicant :12F Fujisoft Akihabara Bldg., 3 Kanda-Neribeicho, Chiyoda-ku, Tokyo 1010022 Japan
(72)**Name of Inventor :**
1)GODA, Keisuke
2)NITTA, Nao
3)SUGIMURA, Takeaki

(57) Abstract :
Provided are a display control device and a display control program with which it is possible to present the performance of class determination by an artificial neural network in a format created for humans to understand easily. The display control device comprises a certainty factor acquisition unit for acquiring a certainty factor calculated by a certainty factor calculation unit that calculates the certainty factor of the result of input image class determination, and a display control unit for causing the distribution per input image of a certainty factor acquired by the certainty factor acquisition unit to be displayed such that at least one of display axes of a graph is used as a certainty factor axis that indicates the certainty factor.

No. of Pages : 23 No. of Claims : 9

(12) PATENT APPLICATION PUBLICATION
(19) INDIA
(22) Date of filing of Application :16/12/2020
(21) Application No.202017054783 A
(43) Publication Date : 05/03/2021

(54) Title of the invention : INTRODUCER TOOL AND METHODS THEREOF

(51) International classification	:A61M0025060000, A61M0025010000, A61M0025090000, A61B0017320000, A61M0025000000
(31) Priority Document No	:62/687440
(32) Priority Date	:20/06/2018
(33) Name of priority country	:U.S.A.
(86) International Application No	:PCT/US2019/038045
Filing Date	:19/06/2019
(87) International Publication No	:WO 2019/246304
(61) Patent of Addition to Application Number	:NA
Filing Date	:NA
(62) Divisional to Application Number	:NA
Filing Date	:NA

(71)**Name of Applicant :**
1)C.R. BARD, INC.
Address of Applicant :IP Law Group 1 Becton Drive, M/C 110 IP Ops Franklin Lakes, NJ 07417 U.S.A.
(72)**Name of Inventor :**
1)ANDERSEN, Christian
2)EVANS, John, G.

(57) Abstract :
An introducer tool including a housing, a sheath detachably coupled to the housing, and a needle fixed to the housing. The housing can include a guidewire actuating mechanism configured to extend and retract a guidewire fixed to the guidewire actuating mechanism. The sheath can include a handle, and can be detachably coupled to the housing in a first configuration of the introducer tool designed for venous introduction of the sheath. An end portion of the needle can extend past an end portion of the sheath in the first configuration of the introducer tool. Methods for venous access including obtaining and using the introducer tool are also disclosed.

No. of Pages : 10 No. of Claims : 17

(12) PATENT APPLICATION PUBLICATION
(21) Application No.202017054789 A
(19) INDIA
(22) Date of filing of Application :16/12/2020
(43) Publication Date : 05/03/2021

(54) Title of the invention : SPHERICAL FLYING AMPHIBIAN

(51) International classification	:B60F0005020000, B60P0003140000, B60F0005000000, B64C0011000000, B64C0039060000	(71)**Name of Applicant :** **1)SYZDYKOV, Kazbek Nugerbekovich** Address of Applicant :Saburhanskaya, 7 s.N.Dubovka Abajskij rajon Karagandinskaya Oblast', 101204 Kazakhstan
(31) Priority Document No	:2018/0427.1	(72)**Name of Inventor :** **1)SYZDYKOV, Kazbek Nugerbekovich**
(32) Priority Date	:18/06/2018	
(33) Name of priority country	:Kazakhstan	
(86) International Application No	:PCT/KZ2019/000010	
Filing Date	:10/06/2019	
(87) International Publication No	:WO 2019/245356	
(61) Patent of Addition to Application Number	:NA	
Filing Date	:NA	
(62) Divisional to Application Number	:NA	
Filing Date	:NA	

(57) Abstract :
The invention relates to transportation means capable of traveling over land and water, and in the air. The present spherical flying amphibian comprises wheels that are propellers, a landing gear consisting of a front part and a rear part that are articulated, a spherical fuselage, a semi-spherical canopy, and lower variable-geometry aircraft wings. The front part rests on two wheels that are propellers. The rear part of the landing gear is provided with annular supports that are capable of rotating 360 degrees in a horizontal plane about the fuselage. The lower aircraft wings are configured to have variable geometry. Hydrofoils are integral with additional aircraft wings. The wheels of the front part are fastened to an annular support that is integral with load-bearing annular elements of the fuselage. The lower wings are different lengths and widths, and disposed at different heights. A support for a circular table is integral with a stationary vertical rotor shaft. The invention increases stability during takeoff, in flight, and landing, and in a crosswind, and increases flight safety.

No. of Pages : 8 No. of Claims : 1

(12) PATENT APPLICATION PUBLICATION
(21) Application No.202017054816 A
(19) INDIA
(22) Date of filing of Application :16/12/2020
(43) Publication Date : 05/03/2021

(54) Title of the invention : VIDEO CODING OR VIDEO DECODING DEVICE, VIDEO CODING OR VIDEO DECODING METHOD, PROGRAM, AND RECORDING MEDIUM

(51) International classification	:H04N0019426000, H04N0019960000, A61F0005010000, H04N0019176000, H04N0019110000
(31) Priority Document No	:2018-120872
(32) Priority Date	:26/06/2018
(33) Name of priority country	:Japan
(86) International Application No	:PCT/JP2019/005263
Filing Date	:14/02/2019
(87) International Publication No	:WO 2020/003583
(61) Patent of Addition to Application Number	:NA
Filing Date	:NA
(62) Divisional to Application Number	:NA
Filing Date	:NA

(71)**Name of Applicant :**
1)NEC CORPORATION
Address of Applicant :7-1, Shiba 5-chome, Minato-ku, Tokyo 1088001 Japan
(72)**Name of Inventor :**
1)CHONO, Keiichi

(57) Abstract :
When the range of use of an image used for intra-screen prediction is expanded, there is a problem that the required buffer size increases in response to the expanded range. In order to solve this problem, the range of use of the image used for intra-screen prediction is adaptively controlled. This intra-screen prediction device 100 is provided with a control unit 115 which, on the basis of the relationship between the position of a candidate image used for intra-screen prediction for a block to be processed and the position of a unit to which the block to be processed belongs, controls partial ranges to be used for the intra-screen prediction, the partial ranges being respectively located across edges of the unit in predetermined directions from the range of use of the image used for intra-screen prediction, within a predetermined maximum range.

No. of Pages : 27 No. of Claims : 10

(12) PATENT APPLICATION PUBLICATION
(19) INDIA
(22) Date of filing of Application :16/12/2020
(21) Application No.202017054817 A
(43) Publication Date : 05/03/2021

(54) Title of the invention : APPARATUS FOR FLY MANAGEMENT

(51) International classification	:A01K0029000000, B64C0039020000, C12Q0001688800, A61B0005080000, A01K0013000000
(31) Priority Document No	:18174587.8
(32) Priority Date	:28/05/2018
(33) Name of priority country	:EPO
(86) International Application No	:PCT/EP2019/063092
Filing Date	:21/05/2019
(87) International Publication No	:WO 2019/228861
(61) Patent of Addition to Application Number	:NA
Filing Date	:NA
(62) Divisional to Application Number	:NA
Filing Date	:NA

(71)**Name of Applicant :**
1)BAYER ANIMAL HEALTH GMBH
Address of Applicant :Kaiser-Wilhelm-Allee 10 51373 Leverkusen Germany
(72)**Name of Inventor :**
1)HAMAEKERS, Veerle
2)TORUN, Nazim
3)BERNS, Georg

(57) Abstract :
The present invention relates to an apparatus (10) for fly management. It is described to provide (310) a processing unit with at least one image of an agricultural environment, wherein the agricultural environment contains a plurality of bovine animals. The at least one image comprises image data of at least a part of at least one bovine animal of the plurality of bovine animals. The processing unit determines (320) a number of flies in the image data of the at least a part of at least one bovine animal. The processing unit determines (330) information relating to fly infestation of the plurality of bovine animals. The determination comprises utilisation of the determined number of flies. An output unit outputs (340) an indication relating to a treatment for fly infestation of the plurality of bovine animals based on the determined information relating to fly infestation of the plurality of bovine animals.

No. of Pages : 31 No. of Claims : 38

(12) PATENT APPLICATION PUBLICATION
(19) INDIA
(22) Date of filing of Application :16/12/2020
(21) Application No.202017054819 A
(43) Publication Date : 05/03/2021

(54) Title of the invention : MULTILAYER FILM WITH CYCLIC OLEFIN SEAL LAYER

(51) International classification	:B32B0027080000, B32B0027320000, B32B0015090000, B32B0027300000, B32B0015200000	(71)**Name of Applicant :** **1)AMCOR FLEXIBLES KREUZLINGEN AG** Address of Applicant :Finkernstrasse 34 8280 KREUZLINGEN Switzerland (72)**Name of Inventor :** **1)VERLODT, Ingeborg** **2)MALFAIT, Tony**
(31) Priority Document No	:18173727.1	
(32) Priority Date	:23/05/2018	
(33) Name of priority country	:EPO	
(86) International Application No	:PCT/EP2019/053973	
Filing Date	:18/02/2019	
(87) International Publication No	:WO 2019/223910	
(61) Patent of Addition to Application Number	:NA	
Filing Date	:NA	
(62) Divisional to Application Number	:NA	
Filing Date	:NA	

(57) Abstract :
The present invention is related to a heat-sealable multilayer packaging film comprising: -a support layer,and -a peelable seal layer comprising a polymer blend, said polymer blend comprising: -from 40 to 85% by weight of one or more first amorphous cyclic olefin polymer(s) characterized by a glass-transition temperature of at least 120°C, -from 10to 55% by weight of one or more second amorphous cyclic olefin polymer(s) characterized by a glass-transition temperature of less than 120°C, and -from 0.5 to 15% by weight, preferably 0.5 to 10% by weight of at least one elastomeric copolymer comprising at least one polymerized monovinylarene and at least one polymerized acyclic olefin.

No. of Pages : 14 No. of Claims : 13

(12) PATENT APPLICATION PUBLICATION
(19) INDIA
(22) Date of filing of Application :16/12/2020
(21) Application No.202017054820 A
(43) Publication Date : 05/03/2021

(54) Title of the invention : POLYSACCHARIDE DERIVATIVES AND COMPOSITIONS COMPRISING SAME

(51) International classification	:C08B0037000000, C11D0003220000, C11D0003000000, C11D0011000000, C11D0003386000
(31) Priority Document No	:62/687310
(32) Priority Date	:20/06/2018
(33) Name of priority country	:U.S.A.
(86) International Application No	:PCT/US2019/037940
Filing Date	:19/06/2019
(87) International Publication No	:WO 2019/246228
(61) Patent of Addition to Application Number	:NA
Filing Date	:NA
(62) Divisional to Application Number	:NA
Filing Date	:NA

(71)**Name of Applicant :**
1)DUPONT INDUSTRIAL BIOSCIENCES USA, LLC
Address of Applicant :Chestnut Run Plaza 974 Centre Road, P.O. Box 2915 Wilmington, Delaware 19805 U.S.A.
(72)**Name of Inventor :**
1)HUANG, Zhengzheng
2)LU, Helen S M
3)NAMBIAR, Rakesh
4)PAULLIN, Jayme L.
5)SIVIK, Mark Robert

(57) Abstract :
The disclosure relates to compositions comprising a polysaccharide derivative wherein the polysaccharide derivative comprises a polysaccharide substituted with a) at least one sulfate group; b) at least one sulfonate group; c) at least one thiosulfate group; or d) a combination thereof; wherein the polysaccharide is poly alpha-1,3-glucan, poly alpha-1,6-glucan, poly alpha-1,3-1,6-glucan, or a mixture thereof; and the polysaccharide derivative has a degree of substitution of about 0.001 to about 3. The compositions can be useful as anti-deposition and/or anti-graying agents in laundry detergents, and in home, personal care, and industrial applications.

No. of Pages : 76 No. of Claims : 17

(12) PATENT APPLICATION PUBLICATION
(19) INDIA
(22) Date of filing of Application :16/12/2020
(21) Application No.202017054821 A
(43) Publication Date : 05/03/2021

(54) Title of the invention : GLYCOSYLATED COMP PILIN VARIANTS, METHODS OF MAKING AND USES THEREOF

(51) International classification	:A61K0039000000, G01N0033680000, C07K0014195000, C07K0014705000, A61K0039090000
(31) Priority Document No	:62/685970
(32) Priority Date	:16/06/2018
(33) Name of priority country	:U.S.A.
(86) International Application No	:PCT/US2019/037251
Filing Date	:14/06/2019
(87) International Publication No	:WO 2019/241672
(61) Patent of Addition to Application Number	:NA
Filing Date	:NA
(62) Divisional to Application Number	:NA
Filing Date	:NA

(71)**Name of Applicant :**
1)VAXNEWMO LLC
Address of Applicant :4340 Duncan Ave., Suite 202 St. Louis, MO 63110 U.S.A.
(72)**Name of Inventor :**
1)HARDING, Christian
2)FELDMAN, Mario

(57) Abstract :
Provided herein are glycosylated ComP proteins, fragments and fusion proteins thereof, and methods of making, for example, for use in the production of conjugate vaccines. Also provided herein are conjugate vaccines against diseases including bacterial diseases.

No. of Pages : 65 No. of Claims : 80

(12) PATENT APPLICATION PUBLICATION
(19) INDIA
(22) Date of filing of Application :16/12/2020

(21) Application No.202017054823 A
(43) Publication Date : 05/03/2021

(54) Title of the invention : BLOOD COLLECTION ASSEMBLY WITH VIBRATION MODULE

(51) International classification	:A61B0005150000, A61B0005151000, A61B0010040000, A61H0023020000, A61B0010000000
(31) Priority Document No	:62/676325
(32) Priority Date	:25/05/2018
(33) Name of priority country	:U.S.A.
(86) International Application No	:PCT/US2019/033493
Filing Date	:22/05/2019
(87) International Publication No	:WO 2019/226754
(61) Patent of Addition to Application Number	:NA
Filing Date	:NA
(62) Divisional to Application Number	:NA
Filing Date	:NA

(71)**Name of Applicant :**
1)BECTON, DICKINSON AND COMPANY
Address of Applicant :1 Becton Drive Franklin Lakes, New Jersey 07417 U.S.A.
(72)**Name of Inventor :**
1)IVOSEVIC, Milan

(57) Abstract :
A device (1) for obtaining a biological sample that includes a blood collection device (10) and a vibration device (80) removably attachable to the blood collection device that provides pain relief is disclosed. The vibration device of the present disclosure provides pain relief to a patient by vibrating the blood collection device. The vibration device can be attached to the blood collection device before it is placed onto a finger to provide pain relief during the finger lancing as well as to aid blood flow from the finger into a collection container during the collection process.

No. of Pages : 22 No. of Claims : 31

(12) PATENT APPLICATION PUBLICATION
(21) Application No.202017054825 A
(19) INDIA
(22) Date of filing of Application :16/12/2020
(43) Publication Date : 05/03/2021

(54) Title of the invention : CATEGORY SPECIFIC INDUSTRIAL BATTERY OPTIMIZATION AND RESTORATION DEVICE, WITH BATTERY DIAGNOSTICS, BATTERY LIFE PROGNOSTICATION, AND AN ARTIFICIAL INTELLIGENCE MEANS

(51) International classification	:B03C0009000000, H02J0007000000, H01M0010060000, H01M0010420000, G06F0030367000
(31) Priority Document No	:62/686717
(32) Priority Date	:19/06/2018
(33) Name of priority country	:U.S.A.
(86) International Application No	:PCT/US2019/037206
Filing Date	:14/06/2019
(87) International Publication No	:WO 2019/245902
(61) Patent of Addition to Application Number	:NA
Filing Date	:NA
(62) Divisional to Application Number	:NA
Filing Date	:NA

(71)**Name of Applicant :**
1)ZEIER, Bruce, Eric
Address of Applicant :28610 Watson Road Menifee, CA 92585 U.S.A.
(72)**Name of Inventor :**
1)ZEIER, Bruce, Eric

(57) Abstract :
Improvements in a battery optimization and restoration device that uses a means of varying the regulator voltage as a function of time and discharge event timing and depth in order to establish a consistent power level for the charging of the capacitor. The device models the power supply regulation voltage as a first order factor as a function of time. The regulation voltage is modeled as a function of time so as to maintain an acceptable charging current at all times by charging a large capacitive load which is periodically discharged in a rapid pulse-like manner requires a modeled regulation voltage that is synchronized to the discharge frequency of the capacitor. The modeled charging is a function of the discharge depth and the charging height in initial capacitor voltage before the discharge and the final capacitor voltage after the discharge.

No. of Pages : 56 No. of Claims : 19

(12) PATENT APPLICATION PUBLICATION
(19) INDIA
(22) Date of filing of Application :16/12/2020
(21) Application No.202017054836 A
(43) Publication Date : 05/03/2021

(54) Title of the invention : SYSTEMS AND METHODS FOR REDUCING LAB- TO-LAB AND/OR INSTRUMENT-TO-INSTRUMENT VARIBILITY OF MULTI-ATTRIBUTE METHOD (MAM) BY RUN-TIME SIGNAL INTENSITY CALIBRATIONS

(51) International classification	:H01J0049000000, G01N0030860000, H01J0049260000, G01N0001280000, B25J0009160000
(31) Priority Document No	:62/763110
(32) Priority Date	:08/06/2018
(33) Name of priority country	:U.S.A.
(86) International Application No	:PCT/US2019/035682
Filing Date	:06/06/2019
(87) International Publication No	:WO 2019/236776
(61) Patent of Addition to Application Number	:NA
Filing Date	:NA
(62) Divisional to Application Number	:NA
Filing Date	:NA

(71)**Name of Applicant :**
1)AMGEN INC.
Address of Applicant :Law Department - Patent Operrations One Amgen Center Drive Thousand Oaks, CA 91320-1799 U.S.A.
(72)**Name of Inventor :**
1)ZHANG, Zhongqi

(57) Abstract :
Systems and methods are described for reducing lab-to-lab and/or instrument-to- instrument variability of Multi- Attribute Methods (MAM) analyses via run-time signal intensity calibration. In various aspects, multiple MAM-based instruments each have detectors and different instrument conditions defined by different instrument models or sets of settings. Each MAM-based instrument receives respective samples and a reference standard as a calibrant. Each MAM-based instrument detects, via its detector, sample isoforms of its respective sample and reference standard isoforms of the reference standard. The MAM-based instruments are associated with processor(s) that determine, via respective MAM iterations, correction factors and sample abundance values corresponding to the sample isoforms. The correction factors are based on the reference standard, and the sample abundance values are based on the correction factors. A variance value of the sample abundance values may be reduced based on correction factors of each of the MAM-based instruments.

No. of Pages : 66 No. of Claims : 36

(12) PATENT APPLICATION PUBLICATION
(19) INDIA
(22) Date of filing of Application :16/12/2020
(21) Application No.202017054837 A
(43) Publication Date : 05/03/2021

(54) Title of the invention : BIOREACTOR FOR RNA IN VITRO TRANSCRIPTION

(51) International classification	:C12P0019340000, C12N0015100000, C12Q0001686500, C12M0001000000, A61K0009000000
(31) Priority Document No	:PCT/EP2018/067504
(32) Priority Date	:28/06/2018
(33) Name of priority country	:EPO
(86) International Application No	:PCT/EP2019/067323
Filing Date	:28/06/2019
(87) International Publication No	:WO 2020/002598
(61) Patent of Addition to Application Number	:NA
Filing Date	:NA
(62) Divisional to Application Number	:NA
Filing Date	:NA

(71)**Name of Applicant :**
1)CUREVAC AG
Address of Applicant :Friedrich-Miescher-Strasse 15 72076 T¼bingen Germany
2)TESLA GROHMANN AUTOMATION GMBH
(72)**Name of Inventor :**
1)YAZDAN PANAH, Benyamin
2)ROOS, Tilmann
3)KUNZE, Martin
4)BERTSCH, Felix
5)WOCHNER, Aniela
6)RAUEN, Michael
7)HOFFMANN, Philipp

(57) Abstract :
The present invention relates to a bioreactor for RNA in vitro transcription, a method for RNA in vitro transcription, a module for transcribing DNA into RNA and an automated apparatus for RNA manufacturing. Further, the use of a bioreactor for RNA in vitro transcription as described herein is part of the present invention.The present invention relates to an RNA in vitro transcription reactor designed to be operable in an automated manner under GMP-compliant conditions. In particular, said RNA in vitro transcription reactor allows repetitive use of DNA template for various RNA in vitro transcription reactions. Further, the invention relates to an apparatus for RNA manufacturing comprising (a) a module for template DNA synthesis, (b) a module for transcribing DNA into RNA comprising said RNA in vitro transcription reactor, and, optionally, (c) a module for RNA formulation.

No. of Pages : 34 No. of Claims : 76

(12) PATENT APPLICATION PUBLICATION
(19) INDIA
(22) Date of filing of Application :16/12/2020
(21) Application No.202017054838 A
(43) Publication Date : 05/03/2021

(54) Title of the invention : ARTHROSPIRA PLATENSIS ORAL VACCINE DELIVERY PLATFORM

(51) International classification	:A61K0039000000, A61K0039120000, G01N0033569000, C07K0014005000, C12Q0001700000
(31) Priority Document No	:62/672891
(32) Priority Date	:17/05/2018
(33) Name of priority country	:U.S.A.
(86) International Application No	:PCT/US2019/032998
Filing Date	:17/05/2019
(87) International Publication No	:WO 2019/222711
(61) Patent of Addition to Application Number	:NA
Filing Date	:NA
(62) Divisional to Application Number	:NA
Filing Date	:NA

(71)**Name of Applicant :**
1)LUMEN BIOSCIENCE, INC.
Address of Applicant :1441 N 34th Street, Suite 300 Seattle, Washington 98103 U.S.A.
(72)**Name of Inventor :**
1)ROBERTS, James
2)TASCH, Michael A.
3)SAVERIA, Tracy

(57) Abstract :
The present disclosure provides oral antigenic compositions comprising a recombinant Spirulina comprising at least one exogenous antigenic epitope. Oral antigenic compositions of the present disclosure can be used as vaccines. Oral antigenic compositions of the present disclosure can be used to induce a protective immune response to infectious microorganism, tumor antigens, or self-antigens.

No. of Pages : 48 No. of Claims : 67

(12) PATENT APPLICATION PUBLICATION
(19) INDIA
(22) Date of filing of Application :16/12/2020

(21) Application No.202017054842 A
(43) Publication Date : 05/03/2021

(54) Title of the invention : UE BEHAVIOR WHEN THE DEVICE IS ATTACHED FOR EMERGENCY SERVICE

(51) International classification	:H04W0004900000, H04W0076500000, H04W0048180000, H04W0036000000, H04W0076160000
(31) Priority Document No	:201811023556
(32) Priority Date	:25/06/2018
(33) Name of priority country	:India
(86) International Application No	:PCT/JP2019/021667
Filing Date	:31/05/2019
(87) International Publication No	:WO 2020/003886
(61) Patent of Addition to Application Number	:NA
Filing Date	:NA
(62) Divisional to Application Number	:NA
Filing Date	:NA

(71)**Name of Applicant :**
1)NEC CORPORATION
Address of Applicant :7-1, Shiba 5-chome, Minato-ku, Tokyo 1088001 Japan
(72)**Name of Inventor :**
1)TIWARI Kundan
2)TAMURA Toshiyuki

(57) Abstract :
This disclosure is related to a procedure of handling UE (100) behavior when the UE (100)is attached for emergency services. More specifically this disclosure defines the UE (100) behavior when the UE (100) is registered to a PLMN or two different PLMN via 3GPP access network and non-3GPP access network and UE (100) has is registered for emergency service over one of the 3GPP access network or non-3GPP access network.

No. of Pages : 16 No. of Claims : 4

(12) PATENT APPLICATION PUBLICATION
(19) INDIA
(22) Date of filing of Application :16/12/2020
(21) Application No.202017054846 A
(43) Publication Date : 05/03/2021

(54) Title of the invention : SYSTEM AND METHOD OF TRANSITIONING FROM SYNCHRONOUS TO ASYNCHRONOUS DISPENSING

(51) International classification	:H01L0021670000, H05K0013040000, G01N0035100000, H01L0021660000, B01L0009000000
(31) Priority Document No	:16/044104
(32) Priority Date	:24/07/2018
(33) Name of priority country	:U.S.A.
(86) International Application No	:16/044104
Filing Date	:24/07/2018
(87) International Publication No	:WO 2020/023124
(61) Patent of Addition to Application Number	:NA
Filing Date	:NA
(62) Divisional to Application Number	:NA
Filing Date	:NA

(71)**Name of Applicant :**
1)ILLINOIS TOOL WORKS INC.
Address of Applicant :155 Harlem Avenue Glenview, IL 60025 U.S.A.
(72)**Name of Inventor :**
1)REID, Scott, A.
2)LEONARDO, Marzuki
3)READ, Hugh, R.
4)AGARWAL, Sunny

(57) Abstract :
A method of dispensing material on multiple patterns or multiple substrates include delivering the patterns or substrates to a dispense position, acquiring data relative to the patterns or substrates, and determining whether the patterns or substrates are properly suited for simultaneous dispensing. If properly suited for simultaneous dispensing, the method includes performing simultaneous dispense operations on the patterns or substrates based on the acquired data in a synchronous mode of operation. If not properly suited for simultaneous dispensing, the method includes asynchronously performing one of (1) a first dispense operation on a first pattern of the at least two patterns and a second dispense operation on a second pattern of the at least two patterns, (2) a single dispense operation on one of the first pattern and the second pattern, and (3) no dispense operation.

No. of Pages : 24 No. of Claims : 20

(12) PATENT APPLICATION PUBLICATION
(19) INDIA
(22) Date of filing of Application :16/12/2020
(21) Application No.202017054847 A
(43) Publication Date : 05/03/2021

(54) Title of the invention : METHOD AND DEVICE FOR EMBOSSING RELIEF STRUCTURES

(51) International classification	:B31F0001070000, B31B0050880000, B44B0005000000, B31B0070880000, B44C0001140000
(31) Priority Document No	:NA
(32) Priority Date	:NA
(33) Name of priority country	:NA
(86) International Application No	:PCT/IB2018/054699
Filing Date	:26/06/2018
(87) International Publication No	:WO 2020/002970
(61) Patent of Addition to Application Number	:NA
Filing Date	:NA
(62) Divisional to Application Number	:NA
Filing Date	:NA

(71)**Name of Applicant :**
1)BOEGLI-GRAVURES SA
Address of Applicant :Rue de la Gare 24-26 2074 Marin-Epagnier Switzerland
(72)**Name of Inventor :**
1)BOEGLI, Charles
2)DROZ, Alain
3)LUSTENBERGER, Felix

(57) Abstract :
A method and device of embossing individually light-reflecting areas on a foil material, the method and device comprising feeding a foil material into a roller nip between a pair of rollers, wherein the pair of rollers comprises a first roller and a second roller, providing each of the first roller and second roller at their respective surfaces at least in a determined perimeter, respectively with a plurality of polyhedron-shaped positive projections and a plurality of negative projections complementary to the positive projections, whereby the plurality of positive projections are arranged according to a 2-dimensional grid. The plurality of polyhedron-shaped positive projections seamlessly and gaplessly join with those corresponding negative projections at the intended embossing of the foil material, hence enabling a homogeneously jointed embossed polyhedron-like shape in the foil. The method and device further comprise, for the purpose of providing a plurality of light-reflecting areas on the foil material, that are intended to reflect light in line with a table of reflectivity values for the 2-dimensional grid, according to an orientation and shape of each of the plurality of light-reflecting areas, and enabling a perception by the human eye of a user, of the intended reflected light on a determined wide viewing angle covered by reflected light from any of the light-reflecting areas, a step of adjusting for each of the plurality of light-reflecting areas to be provided, an orientation and shape of the corresponding positive projection in the 2-dimensional grid, that is intended to emboss the light-reflecting area.

No. of Pages : 40 No. of Claims : 34

(12) PATENT APPLICATION PUBLICATION
(19) INDIA
(22) Date of filing of Application :16/12/2020
(21) Application No.202017054848 A
(43) Publication Date : 05/03/2021

(54) Title of the invention : DISCONNECTING DEVICE FOR A SURGE ARRESTER

(51) International classification	:H01T0001140000, H01C0007120000, H01H0037760000, H01T0004060000, H01T0001120000
(31) Priority Document No	:10 2018 114 564.0
(32) Priority Date	:18/06/2018
(33) Name of priority country	:Germany
(86) International Application No	:PCT/EP2019/062906
Filing Date	:20/05/2019
(87) International Publication No	:WO 2019/242959
(61) Patent of Addition to Application Number	:NA
Filing Date	:NA
(62) Divisional to Application Number	:NA
Filing Date	:NA

(71)**Name of Applicant :**
1)DEHN SE + CO KG
Address of Applicant :Hans-Dehn-Strae 1 92318 Neumarkt/Opf. Germany
(72)**Name of Inventor :**
1)Z„UNER, Edmund

(57) Abstract :
The invention relates to a disconnecting device for a surge arrester that is held by a support body, with plug contacts, which are connected to at least one arrester element of the surge arrester, extending from the support body. The invention furthermore comprises a switch blade, which is connected at a first end via a thermal separation point to the arrester element and by a second end to one of the plug contacts. Furthermore, an insulating, spring-biased disconnecting support, which is pivotally mounted on the support body, is provided, wherein the spring bias acts on the thermal separation point via the switch blade. According to the invention, the switch blade is in the form of a planar, elongate, metallic, resiliently elastic disconnecting strip with a rectangular cross section.

No. of Pages : 9 No. of Claims : 6

(12) PATENT APPLICATION PUBLICATION
(19) INDIA
(22) Date of filing of Application :16/12/2020

(21) Application No.202017054849 A
(43) Publication Date : 05/03/2021

(54) Title of the invention : MULTICHANNEL AUDIO CODING

(51) International classification	:G10L0019008000, G10L0019060000, G10L0019020000, H04S0003000000, H04N0019520000
(31) Priority Document No	:18179373.8
(32) Priority Date	:22/06/2018
(33) Name of priority country	:EPO
(86) International Application No	:PCT/EP2019/066228
Filing Date	:19/06/2019
(87) International Publication No	:WO 2019/243434
(61) Patent of Addition to Application Number	:NA
Filing Date	:NA
(62) Divisional to Application Number	:NA
Filing Date	:NA

(71)**Name of Applicant :**
1)FRAUNHOFER-GESELLSCHAFT ZUR F–RDERUNG DER ANGEWANDTEN FORSCHUNG E.V.
Address of Applicant :Hansastrae 27c 80686 M¼nchen Germany
(72)**Name of Inventor :**
1)BTHE, Jan
2)FOTOPOULOU, Eleni
3)KORSE, Srikanth
4)MABEN, Pallavi
5)MULTRUS, Markus
6)REUTELHUBER, Franz

(57) Abstract :
In multichannel audio coding, improved computational efficiency is achieved by computing comparison parameters for ITD compensation between any two channels in the frequency domain for a parametric audio encoder. This may mitigate negative effects on encoder parameter estimates.

No. of Pages : 18 No. of Claims : 15

(12) PATENT APPLICATION PUBLICATION
(19) INDIA
(22) Date of filing of Application :16/12/2020

(21) Application No.202017054850 A
(43) Publication Date : 05/03/2021

(54) Title of the invention : INJECTOR APPARATUS

(51) International classification	:F02M0061080000, F02M0057020000, F16K0029000000, F02M0049020000, F02M0061160000	(71)**Name of Applicant :** **1)RKLAB AG** Address of Applicant :Platz 4 6039 Root D4 Switzerland (72)**Name of Inventor :** **1)MELDOLESI, Riccardo** **2)KUCKLER, Ron** **3)EASTWOOD, Daniel** **4)CRANFIELD, Mike** **5)CLEMENTS, Mark** **6)PERKINS, Anthony**
(31) Priority Document No	:1810056.0	
(32) Priority Date	:19/06/2018	
(33) Name of priority country	:U.K.	
(86) International Application No	:PCT/EP2019/064133	
Filing Date	:30/05/2019	
(87) International Publication No	:WO 2019/243020	
(61) Patent of Addition to Application Number	:NA	
Filing Date	:NA	
(62) Divisional to Application Number	:NA	
Filing Date	:NA	

(57) Abstract :
An injector nozzle having a first part having a stem and a flange, the flange having a flange surface, a body including a wall defining a hole, an annular nozzle ring having a first surface and a second surface wherein the first surface and/or the flange surface include a plurality of grooves, the stem being received in the hole, the first part being secured to the body to secure the nozzle ring in place such that the first surface engages the flange surface, the second surface engages the body, and the plurality of grooves define a plurality of injector holes.

No. of Pages : 24 No. of Claims : 64

(12) PATENT APPLICATION PUBLICATION
(19) INDIA
(22) Date of filing of Application :16/12/2020
(21) Application No.202017054852 A
(43) Publication Date : 05/03/2021

(54) Title of the invention : SEMICONDUCTOR DEVICE

(51) International classification	:H05K0007200000, H02M0007000000, H01L0023373000, H02M0007480000, H01L0023473000
(31) Priority Document No	:NA
(32) Priority Date	:NA
(33) Name of priority country	:NA
(86) International Application No	:PCT/JP2018/022420
Filing Date	:12/06/2018
(87) International Publication No	:WO 2019/239484
(61) Patent of Addition to Application Number	:NA
Filing Date	:NA
(62) Divisional to Application Number	:NA
Filing Date	:NA

(71)**Name of Applicant :**
1)TOSHIBA MITSUBISHI-ELECTRIC INDUSTRIAL SYSTEMS CORPORATION
Address of Applicant :3-1-1 Kyobashi, Chuo-ku, Tokyo 1040031 Japan
(72)**Name of Inventor :**
1)NAKANO, Toshihide
2)SUZUKI, Kenji
3)NAKAMURA, Koki

(57) Abstract :
This semiconductor device comprises semiconductor modules (5), a cooling member (20), and heat transfer members (12). The semiconductor modules (5) each have a switching element (Q) and a diode (D) that are connected to each other in an anti-parallel connection. The heat transfer members (12) are disposed between the semiconductor modules (5) and the cooling member (20), and the heat generated by the switching elements (Q) and the diodes (D) is transmitted to the cooling member (20). The heat transfer members (12) each have a mounting surface on which the switching element (Q) and the diode (D) are mounted next to each other, and the surface of the heat transfer member opposite the mounting surface is in contact with the cooling member (20). In the heat transfer members (12), the thermal conductivity in a first direction parallel to the mounting surface is greater than the thermal conductivity in a second direction perpendicular to the mounting surface.

No. of Pages : 15 No. of Claims : 6

(12) PATENT APPLICATION PUBLICATION
(21) Application No.202017054857 A
(19) INDIA
(22) Date of filing of Application :16/12/2020
(43) Publication Date : 05/03/2021

(54) Title of the invention : ULTRA-WIDEBAND BASED VEHICLE ACCESS SYSTEM AND COMMUNICATION PROTOCOL FOR LOCALIZATION OF A TARGET DEVICE

(51) International classification	:G07C0009000000, H04W0028040000, H04W0004480000, B60R0025400000, G01S0011020000
(31) Priority Document No	:62/691820
(32) Priority Date	:29/06/2018
(33) Name of priority country	:U.S.A.
(86) International Application No	:PCT/EP2019/066932
Filing Date	:26/06/2019
(87) International Publication No	:WO 2020/002392
(61) Patent of Addition to Application Number	:NA
Filing Date	:NA
(62) Divisional to Application Number	:NA
Filing Date	:NA

(71)**Name of Applicant :**
1)ROBERT BOSCH GMBH
Address of Applicant :Postfach 30 02 20 70442 Stuttgart Germany
(72)**Name of Inventor :**
1)COORS, Martin
2)RAKSHIT, Sushanta
3)JAIN, Vivek

(57) Abstract :
A vehicle access system having a plurality of system nodes arranged throughout a vehicle is disclosed. The vehicle access system employs a communication protocol which utilizes two way ranging (TWR) and time distance of arrival (TDoA) localization processes to determine a position of a target portable device. The communication protocol selects the optimal combination of TWR and TDoA estimations, depending on a number of system nodes that are in communication range of the target portable device, to provide the greatest accuracy with the best power efficiency at the target portable device. Particularly, the communication protocol minimizes the number of messages sent and received by the target portable device, thereby improving the power efficiency thereof. Furthermore, the communication protocol schedules messages between the system nodes and target portable device so as to minimize the wake time of the target portable device, thereby further improving the power efficiency thereof.

No. of Pages : 42 No. of Claims : 20

(12) PATENT APPLICATION PUBLICATION
(21) Application No.202017054860 A
(19) INDIA
(22) Date of filing of Application :16/12/2020
(43) Publication Date : 05/03/2021

(54) Title of the invention : MULTI-STAGE PROCESS CHALLENGE DEVICE, INDICATOR SYSTEM AND PROCESS CHALLENGE DEVICE SYSTEM

(51) International classification	:A61L0002280000, G01N0033574000, C08F0210160000, A61L0002020000, C21D0011000000	(71)**Name of Applicant :** **1)GKE GMBH** Address of Applicant :Auf der Lind 10 65529 Waldems Germany
(31) Priority Document No	:NA	(72)**Name of Inventor :** **1)KAISER, Ulrich**
(32) Priority Date	:NA	
(33) Name of priority country	:NA	
(86) International Application No	:PCT/EP2018/072552	
Filing Date	:21/08/2018	
(87) International Publication No	:WO 2020/038566	
(61) Patent of Addition to Application Number	:NA	
Filing Date	:NA	
(62) Divisional to Application Number	:NA	
Filing Date	:NA	

(57) Abstract :
Process challenge device (2), especially for simulating the worst-case penetration conditions of a load inside a sterilization chamber, comprising a detector volume (90) for housing a biological, chemical or physical indicator (140), whereby said detector volume (90) is arranged at a dead end of a series of gas volumes (110, 14, 118), whereby said process challenge device (2) comprises two parts (6, 14), namely a housing part (6) and an insertion part (14), whereby said insertion part (14) is at least partially insertable into said housing part (6) in such a way that said detector volume (90) is arranged without any seal inside said both parts (6, 14).

No. of Pages : 24 No. of Claims : 15

(12) PATENT APPLICATION PUBLICATION
(19) INDIA
(22) Date of filing of Application :17/12/2020
(21) Application No.202017054865 A
(43) Publication Date : 05/03/2021

(54) Title of the invention : VENTILATION UNIT

(51) International classification	:H05K0007200000, F21S0008080000, B01D0046420000, H01R0013520000, H01R0013502000
(31) Priority Document No	:2018-117314
(32) Priority Date	:20/06/2018
(33) Name of priority country	:Japan
(86) International Application No	:PCT/JP2019/023146
Filing Date	:11/06/2019
(87) International Publication No	:WO 2019/244723
(61) Patent of Addition to Application Number	:NA
Filing Date	:NA
(62) Divisional to Application Number	:NA
Filing Date	:NA

(71)**Name of Applicant :**
1)NITTO DENKO CORPORATION
Address of Applicant :1-2, Shimohozumi 1-chome, Ibaraki-shi, Osaka 5678680 Japan
(72)**Name of Inventor :**
1)NAKAYAMA, Yusuke
2)YANO, Youzou
3)UEMURA, Kou

(57) Abstract :
This ventilation unit is provided with: a ventilation body that allows a gas to circulate between the outside and inside of a housing; a support member that supports the ventilation body and is mounted on an opening part formed in the housing; and a seal member that is disposed between the support member and the outer surface in the vicinity of the opening part of the housing and seals a gap between the support member and the housing, wherein the ventilation unit performs ventilation between the outside and inside of the housing through the ventilation body while mounted on the opening part of the housing. The support member has: a mounting part on which the seal member is mounted; and a wall part provided in the vicinity of the mounting part, wherein the distance between the seal member and the outer surface of the wall part of the support member is 0.5 mm or more in a state in which the seal member is mounted between the support member and the housing.

No. of Pages : 42 No. of Claims : 6

(12) PATENT APPLICATION PUBLICATION
(19) INDIA
(22) Date of filing of Application :17/12/2020
(21) Application No.202017054867 A
(43) Publication Date : 05/03/2021

(54) Title of the invention : NONINVASIVE CRANIAL NERVE THERAPY

(51) International classification	:A61N0001360000, A61N0001050000, A61N0001040000, A61B0005145500, A61N0001200000
(31) Priority Document No	:62/673578
(32) Priority Date	:18/05/2018
(33) Name of priority country	:U.S.A.
(86) International Application No	:PCT/US2019/033151
Filing Date	:20/05/2019
(87) International Publication No	:WO 2019/222750
(61) Patent of Addition to Application Number	:NA
Filing Date	:NA
(62) Divisional to Application Number	:NA
Filing Date	:NA

(71)**Name of Applicant :**
1)MUSC FOUNDATION FOR RESEARCH DEVELOPMENT
Address of Applicant :135 Cannon Street, Suite 101L Charleston, SC 29425 U.S.A.
(72)**Name of Inventor :**
1)BADRAN, Bashar
2)GEORGE, Mark
3)JENKINS, Doe
4)COOK, Daniel

(57) Abstract :
The present invention relates to systems for providing noninvasive cranial nerve stimulation and methods for using the same. The present invention administers therapy through electrodes that are noninvasively attached to one or more of a subject's cranial nerve. The systems can be used to enhancing rehabilitation and recovery by improving neuroplasticity and coupling muscle training with feedback.

No. of Pages : 21 No. of Claims : 20

(12) PATENT APPLICATION PUBLICATION
(19) INDIA
(22) Date of filing of Application :17/12/2020
(21) Application No.202017054888 A
(43) Publication Date : 05/03/2021

(54) Title of the invention : FASTENING DEVICE FOR ATTACHING TWO PLANAR ELEMENTS

(51) International classification	:F16B0019100000, F16B0021070000, G11B0005480000, A63F0009000000, F16B0021180000
(31) Priority Document No	:1856690
(32) Priority Date	:19/07/2018
(33) Name of priority country	:France
(86) International Application No	:PCT/FR2019/051499
Filing Date	:19/06/2019
(87) International Publication No	:WO 2020/016497
(61) Patent of Addition to Application Number	:NA
Filing Date	:NA
(62) Divisional to Application Number	:NA
Filing Date	:NA

(71)**Name of Applicant :**
1)A. RAYMOND ET CIE
Address of Applicant :113 Cours Berriat 38000 GRENOBLE France
(72)**Name of Inventor :**
1)MOUILLON, Romain
2)DE MARCO, Sebastien

(57) Abstract :
Disclosed is a fastening device (1) for attaching an assembly comprising at least two planar elements provided with holes that face each other when the planar elements are in the assembly position, the fastening device comprising: - a clip (2) that is to be inserted into the holes in the planar elements and hold the planar elements together between a first and a second support point, the clip comprising: a planar head (21) for forming the first support point on the main surface of one of the planar elements, the planar head (21) having a central opening for providing access to an inner cavity in the clip (2); and two lateral upright members (22) designed to form the second support point on another one of the planar elements, the lateral upright members (22) having a first end that is secured to the head (21) as well as a second end, the second ends being joined to each other in such a way that the two lateral upright members (22) define the internal cavity in the clip (2); - a pin (3) that is to be inserted into the inner cavity in the clip (2) in order to lock the assembly. The pin (3) includes at least one flexible bridging piece (33) having a central portion (331) that is connected to a main body (32) of the pin by means of two flexible portions (332), and the pin (3) is to come into contact with a lateral upright member (22) of the clip (2) in order to be force-locked at the second support point and hold the assembled planar elements together.

No. of Pages : 13 No. of Claims : 13

(12) PATENT APPLICATION PUBLICATION
(19) INDIA
(22) Date of filing of Application :17/12/2020
(21) Application No.202017054909 A
(43) Publication Date : 05/03/2021

(54) Title of the invention : WORKING MACHINE

(51) International classification	:B60R0003000000, A01D0067040000, A01C0011020000, H01B0001220000, B60R0022180000
(31) Priority Document No	:2018-117262
(32) Priority Date	:20/06/2018
(33) Name of priority country	:Japan
(86) International Application No	:PCT/JP2019/023932
Filing Date	:17/06/2019
(87) International Publication No	:WO 2019/244843
(61) Patent of Addition to Application Number	:NA
Filing Date	:NA
(62) Divisional to Application Number	:NA
Filing Date	:NA

(71)**Name of Applicant :**
1)KUBOTA CORPORATION
Address of Applicant :2-47, Shikitsuhigashi 1-chome, Naniwa-ku, Osaka-shi Osaka 5568601 Japan
(72)**Name of Inventor :**
1)YOSHIDA, Tomohiro
2)KASHIMOTO, Tatsuyuki
3)INUBUSHI, Yutaka
4)KUROZUMI, Yu
5)MATSUDA, Shinichiro

(57) Abstract :
Provided is a working machine configured so that the connection strength of an auxiliary step can be increased while degradation in ride comfort for an operator is suppressed. This working machine is provided with a connection member (70) for connecting a main body step (50), an auxiliary step (60), and a vehicle body main body (1A). The connection member has a first connection section (71) which is connected to the vehicle body main body, a second connection section (72) which is connected to the auxiliary step, a third connection section (73) which is connected to the main body step, a plate-like support plate (75) which connects the first connection section, the second connection section, and the third connection section, and an elastic member (77) which is disposed between the support plate and the main body step.

No. of Pages : 25 No. of Claims : 8

(12) PATENT APPLICATION PUBLICATION
(19) INDIA
(22) Date of filing of Application :17/12/2020
(21) Application No.202017054910 A
(43) Publication Date : 05/03/2021

(54) Title of the invention : WORK MACHINE AND ADJUSTMENT MEMBER

(51) International classification	:H01M0002100000, B60R0016040000, B60K0001040000, G01K0001020000, B06B0001040000
(31) Priority Document No	:2018-117265
(32) Priority Date	:20/06/2018
(33) Name of priority country	:Japan
(86) International Application No	:PCT/JP2019/023934
Filing Date	:17/06/2019
(87) International Publication No	:WO 2019/244845
(61) Patent of Addition to Application Number	:NA
Filing Date	:NA
(62) Divisional to Application Number	:NA
Filing Date	:NA

(71)**Name of Applicant :**
1)KUBOTA CORPORATION
Address of Applicant :2-47, Shikitsuhigashi 1-chome, Naniwa-ku, Osaka-shi Osaka 5568601 Japan
(72)**Name of Inventor :**
1)MORI, Akihiko
2)MATSUDA, Shinichiro

(57) Abstract :
The purpose of the present invention is to provide a work machine that enables the selecting and mounting of batteries of various dimensions. This work machine has a support body (60) that supports a first battery and a second battery (52) having dimensions different from those of the first battery. The support body has: a base member (61) that has a first attachment part (61b) to which the first battery is attached; and an adjustment member (62) that is attached to the base member in a state in which the first battery is not attached to the base member. The adjustment member has a second attachment part (62b) that covers the first attachment part and is disposed between the base member and the second battery, and to which the second battery is attached.

No. of Pages : 22 No. of Claims : 8

(12) PATENT APPLICATION PUBLICATION
(19) INDIA
(22) Date of filing of Application :17/12/2020
(21) Application No.202017054911 A
(43) Publication Date : 05/03/2021

(54) Title of the invention : TRAVELING VEHICLE

(51) International classification	:F16H0057020000, B60K0017020000, B60K0006380000, F16H0059080000, F16H0057040000
(31) Priority Document No	:2018-117296
(32) Priority Date	:20/06/2018
(33) Name of priority country	:Japan
(86) International Application No	:PCT/JP2019/023033
Filing Date	:11/06/2019
(87) International Publication No	:WO 2019/244705
(61) Patent of Addition to Application Number	:NA
Filing Date	:NA
(62) Divisional to Application Number	:NA
Filing Date	:NA

(71)**Name of Applicant :**
1)KUBOTA CORPORATION
Address of Applicant :2-47, Shikitsuhigashi 1-chome, Naniwa-ku, Osaka-shi Osaka 5568601 Japan
(72)**Name of Inventor :**
1)WATANABE, Masatoshi
2)INUBUSHI, Yutaka

(57) Abstract :
This traveling vehicle is provided with an engine, a speed change device which changes the speed of power from the engine and transmits the power to a drive wheel, a mechanical forward/reverse switching device which switches between the forward and reverse movements of the traveling vehicle, a transmitting section which transmits the operation of a shuttle lever to the forward/reverse switching device, and a case in which the speed change device and the forward/reverse switching device are contained. The case has a first containing chamber in which the forward/reverse switching device is contained, and a second containing chamber in which the speed change device is contained. The case has a case upper section which is located on the upper side of the first containing chamber, a case lower section which is located on the lower side of the second containing chamber, and a case wall section which is located between the first containing chamber and the second containing chamber and which separates the first containing chamber and the second containing chamber. An opening for discharging oil discharged from hydraulic equipment is provided in the first containing chamber.

No. of Pages : 36 No. of Claims : 4

(12) PATENT APPLICATION PUBLICATION
(19) INDIA
(22) Date of filing of Application :17/12/2020
(21) Application No.202017054912 A
(43) Publication Date : 05/03/2021

(54) Title of the invention : TRAVELING VEHICLE

(51) International classification	:B60K0017160000, B62D0001280000, B62D0005070000, F15B0013020000, B62D0006000000
(31) Priority Document No	:2018-117300
(32) Priority Date	:20/06/2018
(33) Name of priority country	:Japan
(86) International Application No	:PCT/JP2019/023034
Filing Date	:11/06/2019
(87) International Publication No	:WO 2019/244706
(61) Patent of Addition to Application Number	:NA
Filing Date	:NA
(62) Divisional to Application Number	:NA
Filing Date	:NA

(71)**Name of Applicant :**
1)KUBOTA CORPORATION
Address of Applicant :2-47, Shikitsuhigashi 1-chome, Naniwa-ku, Osaka-shi Osaka 5568601 Japan
(72)**Name of Inventor :**
1)MATSUDA, Shinichiro

(57) Abstract :
This traveling vehicle comprises: a steering wheel operated by a driver; a hydraulic steering controller 166 with which steering of the traveling vehicle via operation of the steering wheel is controlled; a tank port into which hydraulic oil discharged from the steering controller 166 flows and where the pressure of the hydraulic oil is released; a second hose H2 connecting between the steering controller 166 and the tank port and through which the hydraulic oil flows; and an oil tank 168 disposed along the second hose H2 and in which hydraulic oil is stored when the engine of the traveling vehicle is stopped.

No. of Pages : 38 No. of Claims : 4

(12) PATENT APPLICATION PUBLICATION
(19) INDIA
(22) Date of filing of Application :17/12/2020
(21) Application No.202017054914 A
(43) Publication Date : 05/03/2021

(54) Title of the invention : TRAVELING VEHICLE

(51) International classification	:F16H0059080000, B60K0020020000, B62D0005040000, F16H0037020000, F16H0061020000
(31) Priority Document No	:2018-117306
(32) Priority Date	:20/06/2018
(33) Name of priority country	:Japan
(86) International Application No	:PCT/JP2019/023035
Filing Date	:11/06/2019
(87) International Publication No	:WO 2019/244707
(61) Patent of Addition to Application Number	:NA
Filing Date	:NA
(62) Divisional to Application Number	:NA
Filing Date	:NA

(71)**Name of Applicant :**
1)KUBOTA CORPORATION
Address of Applicant :2-47, Shikitsuhigashi 1-chome, Naniwa-ku, Osaka-shi Osaka 5568601 Japan
(72)**Name of Inventor :**
1)MATSUDA, Shinichiro

(57) Abstract :
This traveling vehicle comprises: a steering device having a shuttle lever; a mechanical forward-reverse switching device for switching between forward movement and reversing of the traveling vehicle; a case disposed below the steering device and in which the forward-reverse switching device is housed; and a transmission part between the shuttle lever and the forward-reverse switching device and for transmitting operation of the shuttle lever to the forward-reverse switching device. In the top portion of the case, a through-hole is formed through which the transmission part is inserted.

No. of Pages : 36 No. of Claims : 7

(12) PATENT APPLICATION PUBLICATION
(19) INDIA
(22) Date of filing of Application :17/12/2020
(21) Application No.202017054931 A
(43) Publication Date : 05/03/2021

(54) Title of the invention : NOVEL FUSION PROTEIN SPECIFIC FOR CD137 AND PD-L1

(51) International classification	:C07K0014470000, A61P0035000000, C07K0016280000, A61K0038000000, C07K0014705000
(31) Priority Document No	:18186445.5
(32) Priority Date	:31/07/2018
(33) Name of priority country	:EPO
(86) International Application No	:PCT/EP2019/070596
Filing Date	:31/07/2019
(87) International Publication No	:WO 2020/025659
(61) Patent of Addition to Application Number	:NA
Filing Date	:NA
(62) Divisional to Application Number	:NA
Filing Date	:NA

(71)**Name of Applicant :**
1)PIERIS PHARMACEUTICALS GMBH
Address of Applicant :Lise-Meitner-Strasse 30 85354 Freising-Weihenstephan Germany
2)LES LABORATOIRES SERVIER
(72)**Name of Inventor :**
1)PAVLIDOU, Marina
2)PATTARINI, Lucia
3)SCHOLER-DAHIREL, Alix
4)ROTHE, Christine
5)OLWILL, Shane
6)BEL AIBA, Rachida
7)HINNER, Marlon
8)PEPER, Janet

(57) Abstract :
The disclosure provides fusion proteins specific for both CD 137 and PD-L1, which fusion protein can be used to co-stimulate lymphocyte activation in a PD-L1-target-dependent manner. Such fusion proteins can be used in many pharmaceutical applications, for example, as anti-cancer agents and/or immune modulators for the treatment or prevention of human diseases such as a variety of tumors. The present disclosure also concerns methods of making the fusion proteins described herein as well as compositions comprising such fusion proteins. The present disclosure further relates to nucleic acid molecules encoding such fusion proteins and to methods for generation of such fusion proteins and nucleic acid molecules. In addition, the application discloses therapeutic and/or diagnostic uses of such fusion proteins as well as compositions comprising one or more of such fusion proteins.

No. of Pages : 100 No. of Claims : 79

(12) PATENT APPLICATION PUBLICATION
(21) Application No.202017054941 A
(19) INDIA
(22) Date of filing of Application :17/12/2020
(43) Publication Date : 05/03/2021

(54) Title of the invention : A LED LIGHTING SOURCE FOR IMPROVED COGNITIVE PERFORMANCE AND WITH SUN-LIGHT PROPERTIES

(51) International classification	:A61N0005060000, H05B0045200000, F21Y0115100000, G01J0001420000, G01J0001040000	(71)**Name of Applicant :** **1)MEDŘICK • , Hynek** Address of Applicant :S¡zavsk¡ 2031/32 120 00 Praha 2-Vinohrady Czech Republic **2)STEPAN, Daniel** **3)JESENSKY, Daniel**
(31) Priority Document No	:2018-330	(72)**Name of Inventor :**
(32) Priority Date	:03/07/2018	**1)MEDRICK • , Hynek**
(33) Name of priority country	:Czech Republic	
(86) International Application No	:PCT/IB2019/055694	
Filing Date	:03/07/2019	
(87) International Publication No	:WO 2020/008397	
(61) Patent of Addition to Application Number	:NA	
Filing Date	:NA	
(62) Divisional to Application Number	:NA	
Filing Date	:NA	

(57) Abstract :
A subject of the invention is the source of LED lighting that improves human cognitive performance during work activities or in any activity and simulates sun radiation in the biologically beneficial range 460 to 660 nm, for more than 90%. The whole system of the LED lighting source is set in such a way that 4.5 to 6% of blue and turquoise light radiation is added to the light radiation emitted from white LED chips, and it is advantageous if of equal radiation intensity. This measurement will provide for balancing of radiation intensity to 90% of the sunshine level. The generated combined light radiation of the cognitive LED lighting source has CRI 98 and correlated colour temperature 4000 to 4700 K, the sun radiation has correlated colour temperature 4982 K and CRI 99.5.

No. of Pages : 19 No. of Claims : 14

(12) PATENT APPLICATION PUBLICATION
(19) INDIA
(22) Date of filing of Application :17/12/2020

(21) Application No.202017054943 A
(43) Publication Date : 05/03/2021

(54) Title of the invention : CHECK VALVE SYSTEM

(51) International classification	:F16K0015020000, F16K0027020000, F16K0015000000, A61M0025020000, G01J0003420000
(31) Priority Document No	:16/023701
(32) Priority Date	:29/06/2018
(33) Name of priority country	:U.S.A.
(86) International Application No	:PCT/EP2019/067226
Filing Date	:27/06/2019
(87) International Publication No	:WO 2020/002536
(61) Patent of Addition to Application Number	:NA
Filing Date	:NA
(62) Divisional to Application Number	:NA
Filing Date	:NA

(71)**Name of Applicant :**
1)SULZER MIXPAC AG
Address of Applicant :R¼tistrasse 7 9469 Haag (Rheintal) Switzerland
(72)**Name of Inventor :**
1)TURNER, Hayden
2)FAINO, Garrett

(57) Abstract :
A check valve system (10) includes a housing (24), a blocking element (29, 31), and a biasing member (72, 73). The housing has a passageway (26) therethrough, the passageway including a first portion (40a, 40b) and a second portion (42a, 42b), the first portion having a diameter that is less than a diameter of the second portion so as to form a stepped portion (50a, 50b). The blocking element is disposed within the second portion of the passageway. The biasing member is disposed within the second portion of the passageway and configured to maintain the blocking element in contact with the stepped portion when under compression. The housing, the blocking element and the biasing member being obtainable by substantially simultaneously 3D printing, so as to be formed from one or more 3D printable materials.

No. of Pages : 13 No. of Claims : 20

(12) PATENT APPLICATION PUBLICATION
(19) INDIA
(22) Date of filing of Application :17/12/2020
(21) Application No.202017054944 A
(43) Publication Date : 05/03/2021

(54) Title of the invention : GLYCATED PROTEIN SENSOR, MEASUREMENT METHOD, PROGRAM, AND SENSOR MANUFACTURE METHOD

(51) International classification	:C12Q0001260000, C12Q0001370000, G01N0033680000, G01N0033720000, G01N0033543000
(31) Priority Document No	:2018-095919
(32) Priority Date	:18/05/2018
(33) Name of priority country	:Japan
(86) International Application No	:PCT/JP2019/019640
Filing Date	:17/05/2019
(87) International Publication No	:WO 2019/221264
(61) Patent of Addition to Application Number	:NA
Filing Date	:NA
(62) Divisional to Application Number	:NA
Filing Date	:NA

(71)**Name of Applicant :**
1)PROVIGATE INC.
Address of Applicant :7-3-1 Hongo Bunkyo-ku Tokyo 1130033 Japan
(72)**Name of Inventor :**
1)ITO, Narushi
2)NISHI, Mitsumi
3)KATAYAMA, Norikazu
4)MIYAZAWA, Yuuya

(57) Abstract :
Provided is a glycated protein sensor provided with: immobilized protease; immobilized ketoamine oxidase; and a hydrogen peroxide detection section.

No. of Pages : 65 No. of Claims : 53

(12) PATENT APPLICATION PUBLICATION
(19) INDIA
(22) Date of filing of Application :17/12/2020
(21) Application No.202017054947 A
(43) Publication Date : 05/03/2021

(54) Title of the invention : SYSTEMS, METHODS AND DEVICES FOR TREATING TRICUSPID INSUFFICIENCY

(51) International classification	:A61F0002240000, A61B0017000000, A61F0002070000, A61F0002060000, A61B0005110000
(31) Priority Document No	:62/682648
(32) Priority Date	:08/06/2018
(33) Name of priority country	:U.S.A.
(86) International Application No	:PCT/IL2019/050658
Filing Date	:07/06/2019
(87) International Publication No	:WO 2019/234755
(61) Patent of Addition to Application Number	:NA
Filing Date	:NA
(62) Divisional to Application Number	:NA
Filing Date	:NA

(71)**Name of Applicant :**
1)INNOVENTRIC LTD.
Address of Applicant :10 Derech Etzel 7636123 Rehovot Israel
(72)**Name of Inventor :**
1)NISSAN, Ori
2)DANINO, Amir
3)PICHERSKY, Yair

(57) Abstract :
Embodiments of the present disclosure are directed to devices and methods for treating tricuspid valve insufficiency. For example, in some embodiments, a tricuspid insufficiency treatment device is provided, and includes a tubular member configured for implantation within a vena cava of a patient, where the tubular member is formed with a sidewall. The device also includes at least two (2) valves arranged circumferentially along the sidewall, where each valve comprises an opening formed in the sidewall, and a blocking member arranged to block and unblock a respective opening of the plurality of openings. Each blocking member comprises a flap or cover pivotally attached at or proximate a portion of a respective opening and arranged to block and unblock the opening during ventricular systole and ventricular diastole, respectively, such that the opening is unblocked in a direction opposite to the attachment of the flap or cover. The at least two valves are arranged along a first circumference at a first location between the ends of the tubular member.

No. of Pages : 20 No. of Claims : 71

(12) PATENT APPLICATION PUBLICATION
(21) Application No.202017054953 A
(19) INDIA
(22) Date of filing of Application :17/12/2020
(43) Publication Date : 05/03/2021

(54) Title of the invention : METHOD FOR TRANSMITTING SIGNAL, NETWORK APPARATUS, AND TERMINAL APPARATUS

(51) International classification	:H04B0001710700, H04W0052240000, H04B0003320000, H04W0052020000, H04W0072040000
(31) Priority Document No	:NA
(32) Priority Date	:NA
(33) Name of priority country	:NA
(86) International Application No	:PCT/CN2018/093171
Filing Date	:27/06/2018
(87) International Publication No	:WO 2020/000269
(61) Patent of Addition to Application Number	:NA
Filing Date	:NA
(62) Divisional to Application Number	:NA
Filing Date	:NA

(71)**Name of Applicant :**
1)GUANGDONG OPPO MOBILE TELECOMMUNICATIONS CORP., LTD.
Address of Applicant :No.18 Haibin Road, Wusha, Chang'an Dongguan, Guangdong 523860 China
(72)**Name of Inventor :**
1)XU, Weijie

(57) Abstract :
Disclosed in an embodiment of the present application are a method for transmitting a signal, a network apparatus, and a terminal apparatus. The method comprises: a network apparatus determining transmission resources for one or more power saving signals, wherein the one or more power saving signals are associated with one or more first signals, or the transmission resources for the one or more power saving signals are associated with one or more time units; and the network apparatus respectively transmitting the one or more power saving signals on the transmission resources therefor. The method, the network apparatus, and the terminal apparatus disclosed in the embodiment of the present application facilitate enhancing reliability of receiving power saving signals by a terminal apparatus.

No. of Pages : 29 No. of Claims : 20

(12) PATENT APPLICATION PUBLICATION
(21) Application No.202017054971 A
(19) INDIA
(22) Date of filing of Application :17/12/2020
(43) Publication Date : 05/03/2021

(54) Title of the invention : FOOD COMPOSITION FOR PROMOTING HEIGHT GROWTH AND PHARMACEUTICAL COMPOSITION FOR PROMOTING HEIGHT GROWTH INCLUDING HUMULUS JAPONICUS EXTRACT OR GROUND HUMULUS JAPONICUS AS ACTIVE INGREDIENT

(51) International classification	:A23L0033105000, A61K0036600000, A61K0008730000, A61P0019000000, A23L0033150000
(31) Priority Document No	:10-2019-0050164
(32) Priority Date	:30/04/2019
(33) Name of priority country	:Republic of Korea
(86) International Application No	:PCT/KR2019/010687
Filing Date	:22/08/2019
(87) International Publication No	:WO 2020/222366
(61) Patent of Addition to Application Number	:NA
Filing Date	:NA
(62) Divisional to Application Number	:NA
Filing Date	:NA

(71)**Name of Applicant :**
1)PENS CO., LTD.
Address of Applicant :4th Floor, 98, Yangpyeong-ro Yeongdeungpo-gu Seoul 07206 Republic of Korea
2)KIM, Hong Sik
(72)**Name of Inventor :**
1)KIM, Hong Sik

(57) Abstract :
The present invention provides: a health functional food composition which is for promoting height growth and includes a Humulus japonicus extract or ground Humulus japonicus as an active ingredient; and a composition which is for promoting height growth and includes a watermelon/garlic paste and a Humulus japonicus extract or ground Humulus japonicus.

No. of Pages : 26 No. of Claims : 15

(12) PATENT APPLICATION PUBLICATION
(19) INDIA
(22) Date of filing of Application :17/12/2020
(21) Application No.202017054972 A
(43) Publication Date : 05/03/2021

(54) Title of the invention : DEVICE FOR PERFORATING A DENSE BONE LAYER

(51) International classification	:A61B0017160000, A61B0017320000, A61H0023020000, A61M0037000000, B29C0065000000
(31) Priority Document No	:00834/18
(32) Priority Date	:03/07/2018
(33) Name of priority country	:Switzerland
(86) International Application No	:PCT/EP2019/067749
Filing Date	:02/07/2019
(87) International Publication No	:WO 2020/007865
(61) Patent of Addition to Application Number	:NA
Filing Date	:NA
(62) Divisional to Application Number	:NA
Filing Date	:NA

(71)**Name of Applicant :**
1)BOSONIC AG
Address of Applicant :Freiburgstrasse 3 3010 Bern Switzerland
(72)**Name of Inventor :**
1)SCHWERY, Andr¨
2)MAYER, Jrg

(57) Abstract :
Disclosed is a device and a method for perforating a dense bone layer (1). The device comprises a vibration generator for generating mechanical vibration, in particular ultrasonic vibration, and an instrument with an elongated shaft (12) and a distal end piece comprising a perforator (13). The distal end piece is arranged at a distal end of the shaft (12) and the proximal end of the shaft is connected or connectable to the vibration generator. The perforator (13) has the form of a solid or a hollow cylinder. The vibration generator, the shaft (12) and the distal end piece are adapted to each other for the shaft (12) to transmit, when connected to the activated vibration generator, mechanical vibration from the vibration generator to the distal end piece and for vibrating the perforator (13) in a direction parallel to its cylinder axis (B).

No. of Pages : 34 No. of Claims : 28

(12) PATENT APPLICATION PUBLICATION
(19) INDIA
(22) Date of filing of Application :17/12/2020
(21) Application No.202017054974 A
(43) Publication Date : 05/03/2021

(54) Title of the invention : INSULATED ELECTRIC WIRE

(51) International classification	:H01B0007020000, H01L0051000000, H01B0003440000, H01L0051500000, H01F0005060000
(31) Priority Document No	:2018-150855
(32) Priority Date	:09/08/2018
(33) Name of priority country	:Japan
(86) International Application No	:PCT/JP2019/031257
Filing Date	:07/08/2019
(87) International Publication No	:WO 2020/032143
(61) Patent of Addition to Application Number	:NA
Filing Date	:NA
(62) Divisional to Application Number	:NA
Filing Date	:NA

(71)**Name of Applicant :**
1)NISSEI ELECTRIC CO., LTD.
Address of Applicant :1509, Okubo-cho, Nishi-ku, Hamamatsu-shi, Shizuoka 4328006 Japan
(72)**Name of Inventor :**
1)OTA Naoki
2)KUROSAWA Yusuke

(57) Abstract :
The present invention is characterized in that the total residual amount of a volatile organic compound and a quasi-volatile organic compound, which remain in an insulating layer and have a boiling point within the range of 150-360°C, is 1500 ppm or less. In particular, when the insulating layer contains an organopolysiloxane, D4-D10 low-molecular cyclic siloxanes are reduced. In the case of an insulated electric wire in which the periphery of a conductor is covered by at least two insulating layers including a first insulating layer and a second insulating layer, the present invention is characterized in that the total residual amount of the volatile organic compound and the quasi-volatile organic compound, which remain in all of the insulating layers and have a boiling point within the range of 150-360°C, is 1500 ppm or less.

No. of Pages : 40 No. of Claims : 20

(12) PATENT APPLICATION PUBLICATION
(21) Application No.202017054978 A
(19) INDIA
(22) Date of filing of Application :17/12/2020
(43) Publication Date : 05/03/2021

(54) Title of the invention : MULTI-LAYER CULTURE VESSEL OBSERVATION SYSTEM, CARRIAGE DEVICE, AND MULTI-LAYER CULTURE VESSEL OBSERVATION DEVICE

(51) International classification	:C12M0001000000, C12M0001320000, C12M0003000000, G02B0007280000, G02B0021000000
(31) Priority Document No	:2018-103807
(32) Priority Date	:30/05/2018
(33) Name of priority country	:Japan
(86) International Application No	:PCT/JP2019/000621
Filing Date	:11/01/2019
(87) International Publication No	:WO 2019/230035
(61) Patent of Addition to Application Number	:NA
Filing Date	:NA
(62) Divisional to Application Number	:NA
Filing Date	:NA

(71)**Name of Applicant :**
1)SHIKOKU INSTRUMENTATION CO., LTD.
Address of Applicant :200-1, Minamigamo, Tadotsu-cho, Nakatado-gun, Kagawa 7640026 Japan
2)THE RESEARCH FOUNDATION FOR MICROBIAL DISEASES OF OSAKA UNIVERSITY
(72)**Name of Inventor :**
1)TANABE, Hiroyuki
2)KAWATA, Yasutomi
3)ONO, Kazuhiro
4)MATSUOKA, Shoji

(57) Abstract :
Problem: To provide a multi-layer culture vessel observation system, a carriage device and a multi-layer culture vessel observation device, with which it is possible for an operator to easily observe a to-be-observed object in a multi-layer culture vessel. Solution: A multi-layer culture vessel observation system comprising: a movable carriage device 20 in which a multi-layer culture vessel 30 having a plurality of built-in trays is installed; and an observation device 10 which allows a to-be-observed object in the trays of the multi-layer culture vessel 30 to be observed, wherein: the carriage device 20 includes a frame comprising a side surface exposure part which exposes, from top to bottom, two side surfaces faced by the multi-layer culture vessel 30; the observation device 10 includes an accommodation part 14 which accommodates the carriage device 20 with the multi-layer culture vessel 30 installed therein, and an image pick-up device 11 which comprises an optical system and outputs an image formed by said optical system; and when the carriage device 20 in which the multi-layer culture vessel 30 is installed is accommodated in the accommodation part 14, the side surface exposure part is positioned on the optical axis of the image pick-up device 11.

No. of Pages : 23 No. of Claims : 8

(12) PATENT APPLICATION PUBLICATION
(19) INDIA
(22) Date of filing of Application :17/12/2020
(21) Application No.202017054985 A
(43) Publication Date : 05/03/2021

(54) Title of the invention : CRYSTAL OF 2,2'-BIS(CARBOXYMETHOXY)-1,1'-BINAPHTHYL

(51) International classification	:C07C0051430000, C08F0210020000, C07D0409140000, C08G0059620000, B32B0027380000
(31) Priority Document No	:2018-104335
(32) Priority Date	:31/05/2018
(33) Name of priority country	:Japan
(86) International Application No	:PCT/JP2019/021005
Filing Date	:28/05/2019
(87) International Publication No	:WO 2019/230685
(61) Patent of Addition to Application Number	:NA
Filing Date	:NA
(62) Divisional to Application Number	:NA
Filing Date	:NA

(71)**Name of Applicant :**
1)HONSHU CHEMICAL INDUSTRY CO., LTD.
Address of Applicant :Mercros Bldg. 4F, 3-3-9, Nihombashi, Chuo-ku, Tokyo 1030027 Japan
(72)**Name of Inventor :**
1)SAKUMA Daichi
2)YAMANE Kentaro
3)MIZOGUCHI Shun
4)SUTO Takeru
5)KODERA Masato

(57) Abstract :
The present invention addresses the problem of providing a novel crystal of 2,2'-bis(carboxymethoxy)-1,1'-binaphthyl suitable as a resin raw material having excellent optical characteristics. As a solution, it was found that by carrying out crystallization using a particular solvent, a crystal of 2,2'-bis(carboxymethoxy)-1,1'-binaphthyl is obtained that is represented by a chemical formula, that has an endothermic peak top temperature, as measured by differential scanning calorimetry, falling within a specific range, and that has an aerated bulk density falling within a specific range.

No. of Pages : 31 No. of Claims : 4

(12) PATENT APPLICATION PUBLICATION
(19) INDIA
(22) Date of filing of Application :17/12/2020
(21) Application No.202017054989 A
(43) Publication Date : 05/03/2021

(54) Title of the invention : TUMOR MICROENVIRONMENT-ACTIVATED DRUG-BINDER CONJUGATES, AND USES RELATED THERETO

(51) International classification	:A61K0047540000, C07K0016280000, C07K0016180000, A61K0031404000, A61K0031400000
(31) Priority Document No	:62/680300
(32) Priority Date	:04/06/2018
(33) Name of priority country	:U.S.A.
(86) International Application No	:PCT/US2019/035374
Filing Date	:04/06/2019
(87) International Publication No	:WO 2019/236567
(61) Patent of Addition to Application Number	:NA
Filing Date	:NA
(62) Divisional to Application Number	:NA
Filing Date	:NA

(71)**Name of Applicant :**
1)TRUSTEES OF TUFTS COLLEGE
Address of Applicant :Ballou Hall 4th Floor Medford, MA 02155 U.S.A.
2)AVACTA LIFE SCIENCES, LIMITED
(72)**Name of Inventor :**
1)VINCENT, Matthew
2)LAI, Hung-sen
3)BASRAN, Amrik
4)BACHOVCHIN, William, W.

(57) Abstract :
Disclosed are binder-drug conjugates that are activated extracellular, with both the binder and the free drug moiety have pharmacological activity.

No. of Pages : 235 No. of Claims : 84

(12) PATENT APPLICATION PUBLICATION
(19) INDIA
(22) Date of filing of Application :17/12/2020

(21) Application No.202017054991 A
(43) Publication Date : 05/03/2021

(54) Title of the invention : FRAGRANCE AND FLAVOR MATERIALS

(51) International classification	:A23L0027200000, C11B0009000000, A61Q0013000000, A23L0002560000, C07C0251400000
(31) Priority Document No	:62/680294
(32) Priority Date	:04/06/2018
(33) Name of priority country	:U.S.A.
(86) International Application No	:PCT/US2019/035441
Filing Date	:04/06/2019
(87) International Publication No	:WO 2019/236614
(61) Patent of Addition to Application Number	:NA
Filing Date	:NA
(62) Divisional to Application Number	:NA
Filing Date	:NA

(71)**Name of Applicant :**
1)TAKASAGO INTERNATIONAL CORPORATION
Address of Applicant :37-1, Kamata 5-chome, Ohta-ku Tokyo 144-8721 Japan
(72)**Name of Inventor :**
1)BLANDINO, Maureen
2)TANUMA, Kenji

(57) Abstract :
The synthesis and application of compounds having unique and desired flavor and/or fragrance characteristics are provided herein. The compounds herein can be employed alone or incorporated as fragrance or flavor ingredients in fragrance or flavor compositions. The application is also directed to consumer products comprising such derivatives and/or fragrance or flavor compositions.

No. of Pages : 60 No. of Claims : 21

(12) PATENT APPLICATION PUBLICATION
(19) INDIA
(22) Date of filing of Application :17/12/2020
(21) Application No.202017054994 A
(43) Publication Date : 05/03/2021

(54) Title of the invention : POSITIVE ELECTRODE, NON-AQUEOUS ELECTROLYTE BATTERY, AND BATTERY PACK

(51) International classification	:H01M0004505000, H01M0004131000, H01M0010052500, H01M0004525000, H01M0004360000
(31) Priority Document No	:NA
(32) Priority Date	:NA
(33) Name of priority country	:NA
(86) International Application No	:PCT/JP2018/025369
Filing Date	:04/07/2018
(87) International Publication No	:WO 2020/008565
(61) Patent of Addition to Application Number	:NA
Filing Date	:NA
(62) Divisional to Application Number	:NA
Filing Date	:NA

(71)**Name of Applicant :**
1)KABUSHIKI KAISHA TOSHIBA
Address of Applicant :1-1, Shibaura 1-chome, Minato-ku, Tokyo 1050023 Japan
(72)**Name of Inventor :**
1)Naoki Nishio
2)yasuaki Murashi
3)Akira Yajima
4)Natsuki Nakamura

(57) Abstract :
According to an embodiment, provided is a positive electrode. The positive electrode includes a positive electrode active material-containing layer, the positive electrode active material including a lithium manganese composite oxide and a lithium cobalt oxide. The positive electrode active material-containing layer has a surface in which a plurality of peaks of Al binding energy in the X-ray photoelectron spectroscopy spectrum are in the range of 70-78 eV. The positive electrode active material-containing layer satisfies the relational formula of 0

No. of Pages : 58 No. of Claims : 7

(12) PATENT APPLICATION PUBLICATION
(19) INDIA
(22) Date of filing of Application :17/12/2020

(21) Application No.202017054995 A
(43) Publication Date : 05/03/2021

(54) Title of the invention : FRAGRANCE MATERIALS

(51) International classification	:C11B0009000000, A61Q0013000000, A23L0027200000, A23L0002560000, A61K0008370000
(31) Priority Document No	:62/680403
(32) Priority Date	:04/06/2018
(33) Name of priority country	:U.S.A.
(86) International Application No	:PCT/US2019/035367
Filing Date	:04/06/2019
(87) International Publication No	:WO 2019/236562
(61) Patent of Addition to Application Number	:NA
Filing Date	:NA
(62) Divisional to Application Number	:NA
Filing Date	:NA

(71)**Name of Applicant :**
1)TAKASAGO INTERNATIONAL CORPORATION
Address of Applicant :37-1, Kamata 5-chome, Ohta-ku Tokyo 144-8721 Japan
(72)**Name of Inventor :**
1)BLANDINO, Maureen
2)LANKIN, Michael, E.

(57) Abstract :
The synthesis and application of a compound having unique and desired fragrance characteristics is provided herein. The compound of the present disclosure can be employed alone or incorporated as a fragrance component in fragrance compositions. The application is also directed to consumer products comprising such compound and/or fragrance compositions.

No. of Pages : 24 No. of Claims : 7

(12) PATENT APPLICATION PUBLICATION
(19) INDIA
(22) Date of filing of Application :17/12/2020

(21) Application No.202017055010 A
(43) Publication Date : 05/03/2021

(54) Title of the invention : AUTOMATED SYSTEM FOR THE ELECTRICAL CONNECTION AND DISCONNECTION OF REFRIGERATED CONTAINERS TO A POWER SUPPLY AND/OR DATA TRANSMISSION NETWORK

(51) International classification	:B60L0053350000, B60L0053600000, F25D0029000000, B60L0053140000, H02J0003000000
(31) Priority Document No	:102018000005738
(32) Priority Date	:25/05/2018
(33) Name of priority country	:Italy
(86) International Application No	:PCT/IB2019/054327
Filing Date	:24/05/2019
(87) International Publication No	:WO 2019/224792
(61) Patent of Addition to Application Number	:NA
Filing Date	:NA
(62) Divisional to Application Number	:NA
Filing Date	:NA

(71)**Name of Applicant :**
1)ARMS S.R.L.
Address of Applicant :Via XX Settembre 33/10 16121 Genova Italy
(72)**Name of Inventor :**
1)PELLEGROTTI, Fuvio
2)BECCE, Alessandro
3)CURLETTO, Pierluigi
4)MINOPOLI, Vincenzo

(57) Abstract :
System for connecting and/or disconnecting the power supply and/or data connection for refrigerated containers (3) in the port, storage and interchange field and/or on board ship, which container (3) is provided with at least one electrical connector (31, 21) for connection to a power supply and/or data transmission network. The system comprises automated means for the electrical connection and disconnection of the said electrical connector (31, 21) to/from the said power supply and/or data transmission network, which means comprise at least one mechanical arm (1).

No. of Pages : 19 No. of Claims : 10

(12) PATENT APPLICATION PUBLICATION
(19) INDIA
(22) Date of filing of Application :17/12/2020
(21) Application No.202017055013 A
(43) Publication Date : 05/03/2021

(54) Title of the invention : NANOPARTICLES AND PREPARATION METHOD

(51) International classification	:B01J0023420000, B01J0031180000, B01J0031220000, B01J0020220000, B01J0023440000
(31) Priority Document No	:1811892.7
(32) Priority Date	:20/07/2018
(33) Name of priority country	:U.K.
(86) International Application No	:PCT/GB2019/052045
Filing Date	:19/07/2019
(87) International Publication No	:WO 2020/016614
(61) Patent of Addition to Application Number	:NA
Filing Date	:NA
(62) Divisional to Application Number	:NA
Filing Date	:NA

(71)**Name of Applicant :**
1)JOHNSON MATTHEY PUBLIC LIMITED COMPANY
Address of Applicant :5th Floor 25 Farringdon Street London EC4A 4AB U.K.
(72)**Name of Inventor :**
1)MURESAN, Nicoleta
2)THOMPSETT, David

(57) Abstract :
The present invention concerns a composite comprising supported nanoclusters, the nanoclusters comprising one or more metal ion-containing compounds, wherein each metal ion-containing compound is a transition metal complex having ligands coordinated to a transition metal ion, the ligands being selected from the group consisting of glyoxime; a glyoxime derivative; salicylaldimine; and a salicylaldimine derivative; and wherein the nanoclusters are spaced across one or more surfaces of a support; a material prepared from the composite by annealing; and solution-based methods for forming the composite and materials. Uses of the metal ion-containing compounds are also described, as are uses of the products as catalysts and adsorbers.

No. of Pages : 38 No. of Claims : 15

(12) PATENT APPLICATION PUBLICATION
(21) Application No.202017055018 A
(19) INDIA
(22) Date of filing of Application :17/12/2020
(43) Publication Date : 05/03/2021

(54) Title of the invention : ANTIBODY INDUCING IMMUNE TOLERANCE, INDUCED LYMPHOCYTE, AND CELL THERAPY AGENT THERAPEUTIC METHOD USING INDUCED LYMPHOCYTE

(51) International classification	:A61K0039000000, C07K0016280000, A61K0047680000, A61P0037080000, C07K0014705000
(31) Priority Document No	:2018-118996
(32) Priority Date	:22/06/2018
(33) Name of priority country	:Japan
(86) International Application No	:PCT/JP2019/024752
Filing Date	:21/06/2019
(87) International Publication No	:WO 2019/245037
(61) Patent of Addition to Application Number	:NA
Filing Date	:NA
(62) Divisional to Application Number	:NA
Filing Date	:NA

(71)**Name of Applicant :**
1)JUNTEN BIO CO., LTD.
Address of Applicant :1-3, Nihonbashi 2-chome, Chuo-ku, Tokyo 1030027 Japan
(72)**Name of Inventor :**
1)MAEDA Ryu
2)KAWAKAMI Masayuki
3)UCHIDA Koichiro
4)TAKEDA Kazuyoshi
5)OKUMURA Ko

(57) Abstract :
The present disclosure provides an antibody for inducing immune tolerance, an induced lymphocyte, and a cell therapy agent therapeutic method using the induced lymphocyte. Specifically, the present disclosure provides an antibody that inhibits the interaction between CD80 and/or CD86 expressed on the surface of a certain cell and CD28 expressed on the surface of another cell, and substantially does not induce immune activation-induced cytokines. In a specific embodiment, the Fc portion of the antibody substantially does not produce the immune activation-induced cytokines.

No. of Pages : 80 No. of Claims : 41

(12) PATENT APPLICATION PUBLICATION
(19) INDIA
(22) Date of filing of Application :17/12/2020

(21) Application No.202017055020 A
(43) Publication Date : 05/03/2021

(54) Title of the invention : SAFETY HANDLE FOR THE CONTROL OF ACCESS FOR MACHINES OR INDUSTRIAL PLANTS

(51) International classification	:F16P0003120000, H01H0027000000, A01G0007040000, H04L0029140000, F16P0003080000
(31) Priority Document No	:102018000005914
(32) Priority Date	:31/05/2018
(33) Name of priority country	:Italy
(86) International Application No	:PCT/IB2019/054543
Filing Date	:31/05/2019
(87) International Publication No	:WO 2019/229717
(61) Patent of Addition to Application Number	:NA
Filing Date	:NA
(62) Divisional to Application Number	:NA
Filing Date	:NA

(71)**Name of Applicant :**
1)PIZZATO ELETTRICA S.R.L.
Address of Applicant :Via Torino, 1 36063 Marostica (VI) Italy
(72)**Name of Inventor :**
1)PIZZATO, Marco
2)ZONTA, Simone

(57) Abstract :
A safety handle for the control of access to machines or industrial plants comprises a main body (3, 4) adapted to be anchored to the movable part (M) of the access (A) and adapted to be gripped by a user for moving the movable part (M) of the access (A), fixing means for fixing the main body (3, 4) to the movable part (M) of the access (A), an actuator (2) suitable to be associated with the main body (3, 4) and adapted to interact with control means associated with the fixed part (F) of the access (A) upon closure thereof for enabling the machine or industrial plant to be controlled. The main body (3, 4) houses thereinside one or more signalling and/or control devices (25, 26) provided with electrical connection means for connection to one or more power and/or service circuits of the machine or industrial plant, at least one of the signalling and/or control devices comprising one or more light sources (25) adapted to emit a light beam.

No. of Pages : 12 No. of Claims : 10

(12) PATENT APPLICATION PUBLICATION
(19) INDIA
(22) Date of filing of Application :17/12/2020
(21) Application No.202017055024 A
(43) Publication Date : 05/03/2021

(54) Title of the invention : PREPARATION OF RAW MATERIALS FOR GLASS FURNACE

(51) International classification	:C03B0003020000, C03B0001020000, C03B0003000000, B29C0048000000, B01F0003120000
(31) Priority Document No	:1856124
(32) Priority Date	:03/07/2018
(33) Name of priority country	:France
(86) International Application No	:PCT/FR2019/051591
Filing Date	:27/06/2019
(87) International Publication No	:WO 2020/008128
(61) Patent of Addition to Application Number	:NA
Filing Date	:NA
(62) Divisional to Application Number	:NA
Filing Date	:NA

(71)**Name of Applicant :**
1)SAINT-GOBAIN GLASS FRANCE
Address of Applicant :12 place de l'Iris Tour Saint-Gobain 92400 Courbevoie France
(72)**Name of Inventor :**
1)BARET, Bertrand
2)MARTIN, Alexandre
3)WOELFFEL, William
4)PAPIN, Sophie

(57) Abstract :
The invention relates to a device and a method for the preparation and furnace charging of raw materials for a glass furnace, comprising: a means for producing a mixture of raw material powder and liquid water, creating a moistened mass of raw material powder; a system for producing a mixture of cullet with the moistened mass of raw material powder, creating a mixture of raw material and cullet, known as the MP/C mixture; a raw material preheater in which the MP/C mixture circulates and is heated and dried in order to produce a mass to be charged in the furnace; and a furnace charging system for charging the mass in the glass furnace.

No. of Pages : 19 No. of Claims : 24

(12) PATENT APPLICATION PUBLICATION
(19) INDIA
(22) Date of filing of Application :17/12/2020
(21) Application No.202017055027 A
(43) Publication Date : 05/03/2021

(54) Title of the invention : SELF-SEALING VALVE CONNECTION FOR PRESSURE VESSELS

(51) International classification	:F17C0013040000, B29C0045000000, G01M0003020000, B01D0029010000, F17C0001040000
(31) Priority Document No	:18179194.8
(32) Priority Date	:22/06/2018
(33) Name of priority country	:EPO
(86) International Application No	:PCT/EP2019/066180
Filing Date	:19/06/2019
(87) International Publication No	:WO 2019/243413
(61) Patent of Addition to Application Number	:NA
Filing Date	:NA
(62) Divisional to Application Number	:NA
Filing Date	:NA

(71)**Name of Applicant :**
1)NPROXX B.V.
Address of Applicant :Vogt 21 6422 RK Heerlen Netherlands
(72)**Name of Inventor :**
1)KRONHOLZ, Stephan
2)ZIMMERMANN, Edwin
3)KRATH, Wilhelm
4)MLHEIMS, Josef

(57) Abstract :
The invention relates to a pressure vessel (1), comprising an inner container (2) made of an inner container material, and an outer layer (3) arranged thereon, and a valve connection piece (4) having a two-part sealing canus (41) and an outer piece (42), The sealing canus (41) is positioned on an inner side (23i) of a bulge (23) of the inner container, and the outer piece (42) is positioned between the two- part sealing canus (41), the bulge (23), and the outer piece (42) on an outer side (23a) of the bulge (23) for generating a sealing pressure (AD). Towards the bulge (23), the outer piece (42) is provided with a suitably shaped groove (421) having a first and second edge (421a, 421b) for receiving a sealing ring (6) that seals off under sealing pressure (AD). The groove (421) and the sealing ring (6) are dimensioned in such a way,

No. of Pages : 21 No. of Claims : 15

(12) PATENT APPLICATION PUBLICATION
(19) INDIA
(22) Date of filing of Application :17/12/2020

(21) Application No.202017055032 A
(43) Publication Date : 05/03/2021

(54) Title of the invention : GENE DRIVE TARGETING FEMALE DOUBLESEX SPLICING IN ARTHROPODS

(51) International classification	:C12N0015820000, A01K0067033000, A61K0038000000, C12N0009020000, G16B0050000000
(31) Priority Document No	:1810253.3
(32) Priority Date	:22/06/2018
(33) Name of priority country	:U.K.
(86) International Application No	:PCT/GB2019/051757
Filing Date	:21/06/2019
(87) International Publication No	:WO 2019/243840
(61) Patent of Addition to Application Number	:NA
Filing Date	:NA
(62) Divisional to Application Number	:NA
Filing Date	:NA

(71)**Name of Applicant :**
1)IMPERIAL COLLEGE OF SCIENCE, TECHNOLOGY AND MEDICINE
Address of Applicant :South Kensington Campus Faculty Building Exhibition Road London SW7 2AZ U.K.
(72)**Name of Inventor :**
1)CRISANTI, Andrea
2)KYROU Kyros
3)HAMMOND, Andrew

(57) Abstract :
The invention relates to gene drives, and in particular to genetic sequences and constructs for use in a gene drive. The invention is especially concerned with ultra-conserved and ultra-constrained sequences for use as a gene drive target with the aim of overcoming the development of resistance to the drive. The invention is also concerned with methods of suppressing wild type arthropod populations by use of the gene drive construct described herein.

No. of Pages : 63 No. of Claims : 47

(12) PATENT APPLICATION PUBLICATION
(19) INDIA
(22) Date of filing of Application :17/12/2020
(21) Application No.202017055039 A
(43) Publication Date : 05/03/2021

(54) Title of the invention : POLYNUCLEOTIDE

(51) International classification	:A01K0067033000, B01J0023890000, C10G0011180000, C12N0015630000, C12Q0001689700
(31) Priority Document No	:1810256.6
(32) Priority Date	:22/06/2018
(33) Name of priority country	:U.K.
(86) International Application No	:PCT/GB2019/051749
Filing Date	:21/06/2019
(87) International Publication No	:WO 2019/243837
(61) Patent of Addition to Application Number	:NA
Filing Date	:NA
(62) Divisional to Application Number	:NA
Filing Date	:NA

(71)**Name of Applicant :**
1)IMPERIAL COLLEGE OF SCIENCE, TECHNOLOGY AND MEDICINE
Address of Applicant :South Kensington Campus Faculty Building Exhibition Road London SW7 2AZ U.K.
(72)**Name of Inventor :**
1)CRISANTI, Andrea
2)NOLAN, Tony
3)HAMMOND, Andrew

(57) Abstract :
The invention relates to polynucleotides, and in particular to novel polynucleotides which represent promoter sequences. The invention is especially concerned with novel promoters for use in germline expression, in that they are substantially operative in only germline cells. In particular, the promoters initiate transcription of genes in the germline cells of an arthropod, and can be used in a gene drive. The invention is also concerned with vectors and gene drive constructs comprising the polynucleotides of the invention. The invention is also concerned with methods of producing arthropods comprising vectors containing such promoters.

No. of Pages : 49 No. of Claims : 33

(12) PATENT APPLICATION PUBLICATION
(21) Application No.202017055040 A
(19) INDIA
(22) Date of filing of Application :17/12/2020
(43) Publication Date : 05/03/2021

(54) Title of the invention : PANTS-TYPE ABSORBENT ARTICLE

(51) International classification	:A61F0013496000, A61F0013494000, A61F0013490000, A61F0013475000, F21Y0115300000
(31) Priority Document No	:2018-096648
(32) Priority Date	:18/05/2018
(33) Name of priority country	:Japan
(86) International Application No	:PCT/JP2019/019971
Filing Date	:20/05/2019
(87) International Publication No	:WO 2019/221305
(61) Patent of Addition to Application Number	:NA
Filing Date	:NA
(62) Divisional to Application Number	:NA
Filing Date	:NA

(71)**Name of Applicant :**
1)UNICHARM CORPORATION
Address of Applicant :182, Shimobun, Kinsei-cho, Shikokuchuo-City, Ehime 7990111 Japan
(72)**Name of Inventor :**
1)BABA, Toshimitsu
2)INOUE, Takuya
3)SHIMIZU, Noriko

(57) Abstract :
Provided is a pants-type absorbent article (1) which has an upward/downward direction, a leftward/rightward direction, and a forward/rearward direction that are perpendicular to each other, and which has an absorbent body (11), and a pair of leak-proof walls (50) that are provided on both sides in the leftward/rightward direction of the absorbent body (11) and are raisable on the skin side, wherein at least a first raising start point (57is), which is a start point at which the leak-proof wall (5) is raised, in a first location that is frontward of the center in the forward/rearward direction is located more inward in the leftward/rearward direction than a second raising start point (55is), which is a start point at which the leak-proof wall (50) is raised at a second location that is more rearward in the forward/rearward direction than the first location .

No. of Pages : 33 No. of Claims : 33

(12) PATENT APPLICATION PUBLICATION
(19) INDIA
(22) Date of filing of Application :17/12/2020

(21) Application No.202017055050 A
(43) Publication Date : 05/03/2021

(54) Title of the invention : ABSORBENT ARTICLE

(51) International classification	:A61F0013490000, G02B0005300000, A61F0013496000, B60Q0001076000, A63F0003000000
(31) Priority Document No	:2018-001821U
(32) Priority Date	:18/05/2018
(33) Name of priority country	:Japan
(86) International Application No	:PCT/JP2019/018597
Filing Date	:09/05/2019
(87) International Publication No	:WO 2019/221008
(61) Patent of Addition to Application Number	:NA
Filing Date	:NA
(62) Divisional to Application Number	:NA
Filing Date	:NA

(71)**Name of Applicant :**
1)UNICHARM CORPORATION
Address of Applicant :182, Shimobun, Kinsei-cho, Shikokuchuo-City, Ehime 7990111 Japan
(72)**Name of Inventor :**
1)SHIMIZU, Noriko
2)MAKI, Hideaki
3)INOUE, Takuya

(57) Abstract :
An absorbent article (1) having an up-down direction, a left-right direction, and a front-rear direction that intersect each other, wherein: the absorbent article (1) has a front-side part (2), and a rear-side part (3) equipped with a portion different in function from the front-side part (2), in the front-rear direction; a front figure design (50) showing at least part of the front figure of a character is disposed on the front-side part (2); and a rear figure design (51) showing at least part of the rear figure of a character is disposed on the rear-side part (3).

No. of Pages : 25 No. of Claims : 18

(12) PATENT APPLICATION PUBLICATION
(21) Application No.202017055056 A
(19) INDIA
(22) Date of filing of Application :17/12/2020
(43) Publication Date : 05/03/2021

(54) Title of the invention : INTEGRITY PROTECTION HANDLING AT THE GNB-CU-UP

(51) International classification	:H04W0088080000, H04W0076270000, H04W0076180000, H04W0072040000, H04L0005000000
(31) Priority Document No	:1810340.8
(32) Priority Date	:22/06/2018
(33) Name of priority country	:U.K.
(86) International Application No	:PCT/JP2019/023672
Filing Date	:14/06/2019
(87) International Publication No	:WO 2019/244793
(61) Patent of Addition to Application Number	:NA
Filing Date	:NA
(62) Divisional to Application Number	:NA
Filing Date	:NA

(71)**Name of Applicant :**
1)NEC CORPORATION
Address of Applicant :7-1, Shiba 5-chome, Minato-ku, Tokyo 1088001 Japan
(72)**Name of Inventor :**
1)CHEN, Yuhua
2)HAYASHI, Sadafuku
3)FUTAKI, Hisashi
4)SINGH,Jagdeep Ahluwalia
5)GUPTA, Neeraj
6)KHIRALLAH, Chadi

(57) Abstract :
A communication system is disclosed in which a distributed base station apparatus comprises a central unit for control plane signalling (CU-CP), at least one a central unit for user plane signalling (CU-UP), and at least one distributed unit. The CU-CP obtains information indicating whether a security configuration is supported by a CU-UP and selects a security configuration for an item of user equipment (UE) based on the obtained information.

No. of Pages : 26 No. of Claims : 13

(12) PATENT APPLICATION PUBLICATION
(19) INDIA
(22) Date of filing of Application :17/12/2020
(21) Application No.202017055062 A
(43) Publication Date : 05/03/2021

(54) Title of the invention : AUTOMOBILE AND SLIDING RAIL ASSEMBLY OF SEAT THEREOF

(51) International classification	:B60N0002070000, A47B0088400000, F16C0029040000, E05D0013000000, G01M0007020000
(31) Priority Document No	:201811592913.1
(32) Priority Date	:25/12/2018
(33) Name of priority country	:China
(86) International Application No	:PCT/CN2019/085648
Filing Date	:06/05/2019
(87) International Publication No	:WO 2020/133866
(61) Patent of Addition to Application Number	:NA
Filing Date	:NA
(62) Divisional to Application Number	:NA
Filing Date	:NA

(71)**Name of Applicant :**
1)HUBEI AVIATION PRECISION MACHINERY TECHNOLOGY CO., LTD.
Address of Applicant :No.8, Zhuiri Road, High-Tech Zone Xiangyang, Hubei 441003 China
(72)**Name of Inventor :**
1)HAO, Haoshuai
2)LI, Hongchao
3)HUANG, Kele
4)AN, Yan

(57) Abstract :
The invention discloses an automobile and a sliding rail assembly of a seat thereof. The sliding rail assembly is bilaterally symmetric, and comprises an upper sliding rail and a lower sliding rail extending along a back-and-forth direction as well as an upper ball and a lower ball disposed between the upper sliding rail and the lower sliding rail. The lower sliding rail comprises a horizontal base plate, a first vertical side plate connected to the upper portion at the left edge of the horizontal base plate, and a first horizontal top plate connected to the right side at the upper edge of the first vertical side plate; the upper sliding rail comprises a first inclined plate and a second inclined plate; the extension line of the first inclined plate intersects with the first vertical side plate and the extension line of the first horizontal top plate to form an upper triangular region; the upper ball is mounted in the upper triangular region and comes into point contact with the first inclined plate, the first vertical side plate and the first horizontal top plate; the extension line of the second inclined plate intersects with the horizontal base plate and the first vertical side plate to form a lower triangular region; the lower ball is mounted in the lower triangular region and comes into point contact with the second inclined plate, the horizontal base plate and the first vertical side plate. The sliding rail assembly solves the problem of shaking during seat adjustment, and has enough bearing capability.

No. of Pages : 9 No. of Claims : 8

(12) PATENT APPLICATION PUBLICATION
(19) INDIA
(22) Date of filing of Application :17/12/2020
(21) Application No.202017055064 A
(43) Publication Date : 05/03/2021

(54) Title of the invention : 3-METHYLCROTONIC ACID DECARBOXYLASE (MDC) VARIANTS

(51) International classification	:C12P0005020000, C12N0009880000, C12P0019020000, C08F0210100000, C12P0009000000
(31) Priority Document No	:18181522.6
(32) Priority Date	:03/07/2018
(33) Name of priority country	:EPO
(86) International Application No	:PCT/EP2019/067788
Filing Date	:03/07/2019
(87) International Publication No	:WO 2020/007886
(61) Patent of Addition to Application Number	:NA
Filing Date	:NA
(62) Divisional to Application Number	:NA
Filing Date	:NA

(71)**Name of Applicant :**
1)GLOBAL BIOENERGIES
Address of Applicant :5 rue Henri Desbru¨res 91000 Evry France
(72)**Name of Inventor :**
1)STRICHER, Fran§ois
2)VILLIERS, Beno®t

(57) Abstract :
Described are 3-methylcrotonic acid decarboxylase (MDC) variants showing an improved activity in converting 3-methylcrotonic acid into isobutene as well as methods for the production of isobutene using such enzyme variants.

No. of Pages : 165 No. of Claims : 12

(12) PATENT APPLICATION PUBLICATION
(19) INDIA
(22) Date of filing of Application :17/12/2020
(21) Application No.202017055065 A
(43) Publication Date : 05/03/2021

(54) Title of the invention : ADJUSTABLE ELECTRONIC DEVICE SYSTEM WITH FACIAL MAPPING

(51) International classification	:G06K0009000000, G02B0027010000, H04N0013204000, G02B0027000000, H04N0013207000
(31) Priority Document No	:62/699370
(32) Priority Date	:17/07/2018
(33) Name of priority country	:U.S.A.
(86) International Application No	:PCT/US2019/018894
Filing Date	:21/02/2019
(87) International Publication No	:WO 2020/018149
(61) Patent of Addition to Application Number	:NA
Filing Date	:NA
(62) Divisional to Application Number	:NA
Filing Date	:NA

(71)**Name of Applicant :**
1)APPLE INC.
Address of Applicant :One Apple Park Way Cupertino, CA 95014 U.S.A.
(72)**Name of Inventor :**
1)FRANKLIN, Jeremy, C.
2)NESS, Trevor, J.

(57) Abstract :
A head-mounted device may have a display for displaying image content. Head-mounted support structures in the device may be used to support the display. The head-mounted device or external equipment may include a three-dimensional image sensor. The three-dimensional image sensor may capture a three-dimensional image of a user's face. Control circuitry may analyze the three-dimensional image to identify which of multiple versions of a customizing face-fit module should be used in the electronic device to fit the device to the user' s face. An appropriate face-fit module may be identified based on facial features such as facial size and the shapes of a user's forehead, nose, and cheeks. After identifying which version of the face-fit module is to be used by the user, that version of the face-fit module may be coupled to a non-custom portion of a main unit for the head-mounted device using magnets or other coupling structures.

No. of Pages : 20 No. of Claims : 20

(12) PATENT APPLICATION PUBLICATION
(19) INDIA
(22) Date of filing of Application :17/12/2020

(21) Application No.202017055066 A
(43) Publication Date : 05/03/2021

(54) Title of the invention : HETEROCYCLIC COMPOUNDS USEFUL IN THE TREATMENT OF DISEASE

(51) International classification	:C07D0413040000, C07D0231520000, C07D0261140000, A61K0031415000, C07D0263480000
(31) Priority Document No	:16/010755
(32) Priority Date	:18/06/2018
(33) Name of priority country	:U.S.A.
(86) International Application No	:PCT/US2019/037749
Filing Date	:18/06/2019
(87) International Publication No	:WO 2019/246109
(61) Patent of Addition to Application Number	:NA
Filing Date	:NA
(62) Divisional to Application Number	:NA
Filing Date	:NA

(71)**Name of Applicant :**
1)EPIGEN BIOSCIENCES, INC.
Address of Applicant :10255 Barnes Canyon Road Suite 104A San Diego, California 92121 U.S.A.
(72)**Name of Inventor :**
1)BEATON, Graham
2)TUCCI, Fabio C.
3)RAVULA, Satheesh B.
4)SHAH, Chandravadan R.
5)LEE, Suk Joong

(57) Abstract :
Heterocyclic compounds are described that are lysophosphatidic acid receptor ligands that are useful in the treatment of lysophosphatidic acid receptor-dependent diseases and conditions.

No. of Pages : 95 No. of Claims : 22

(12) PATENT APPLICATION PUBLICATION
(19) INDIA
(22) Date of filing of Application :17/12/2020
(21) Application No.202017055067 A
(43) Publication Date : 05/03/2021

(54) Title of the invention : A HIGH-VOLTAGE ION-MEDIATED FLOW/FLOW-ASSIST MANGANESE DIOXIDE - ZINC BATTERY

(51) International classification	:C25B0001000000, C25B0015020000, H01M0002020000, H01M0008220000, H01M0008023400
(31) Priority Document No	:62/684923
(32) Priority Date	:14/06/2018
(33) Name of priority country	:U.S.A.
(86) International Application No	:PCT/US2019/037009
Filing Date	:13/06/2019
(87) International Publication No	:WO 2019/241531
(61) Patent of Addition to Application Number	:NA
Filing Date	:NA
(62) Divisional to Application Number	:NA
Filing Date	:NA

(71)**Name of Applicant :**
1)RESEARCH FOUNDATION OF THE CITY UNIVERSITY OF NEW YORK
Address of Applicant :230 West 41St Street, 7th Fl. New York, NY 10036 U.S.A.
(72)**Name of Inventor :**
1)YADAV, Gautam G.
2)HUANG, Jinchao
3)TURNEY, Damon
4)NYCE, Michael
5)COUZIS, Alexander
6)DEANGELIS, Valerio
7)BANERJEE, Sanjoy
8)WEI, Xia

(57) Abstract :
A battery includes a cathode compartment, a catholyte solution disposed within the cathode compartment, an anode compartment, an anolyte solution disposed within the anode compartment, a separator disposed between the cathode compartment and the anode compartment, and a flow system configured to provide fluid circulation in the cathode compartment and the anode compartment. The catholyte solution and the anolyte solution have different compositions.

No. of Pages : 26 No. of Claims : 39

(12) PATENT APPLICATION PUBLICATION
(19) INDIA
(22) Date of filing of Application :17/12/2020
(21) Application No.202017055069 A
(43) Publication Date : 05/03/2021

(54) Title of the invention : COMMUNICATION METHOD AND DEVICE

(51) International classification	:H04W0036000000, H04M0001725000, H04W0024040000, H04W0076160000, H04M0003436000
(31) Priority Document No	:201810849246.4
(32) Priority Date	:28/07/2018
(33) Name of priority country	:China
(86) International Application No	:PCT/CN2019/097565
Filing Date	:24/07/2019
(87) International Publication No	:WO 2020/024864
(61) Patent of Addition to Application Number	:NA
Filing Date	:NA
(62) Divisional to Application Number	:NA
Filing Date	:NA

(71)**Name of Applicant :**
1)HUAWEI TECHNOLOGIES CO., LTD.
Address of Applicant :Huawei Administration Building, Bantian, Longgang District Shenzhen, Guangdong 518129 China
(72)**Name of Inventor :**
1)LI, Lin
2)WU, Min
3)ZHENG, Delai
4)NI, Shengyue

(57) Abstract :
The embodiments of the present application relate to the technical field of communications, and disclosed thereby are a communication method and device. An incoming call number may be obtained more quickly in a CSFB process so as to avoid the interruption of a packet switching data service caused by a UE during a process of refusing to establish a call. The method may comprise: a user equipment (UE) receiving a first message from a network side; the first message is used to indicate that the UE performs circuit switched domain fallback (CSFB) as a called party; and the first message comprises first information, the first information being used to indicate an incoming call number; if determined that a preset condition is met, sending a second message to the network side, the second message being used to indicate rejecting performing CSFB; the preset condition comprises at least one of the following: the incoming call number being restricted; the UE being in a mode of automatically rejecting CSFB incoming calls.

No. of Pages : 50 No. of Claims : 20

(12) PATENT APPLICATION PUBLICATION
(19) INDIA
(22) Date of filing of Application :17/12/2020
(21) Application No.202017055070 A
(43) Publication Date : 05/03/2021

(54) Title of the invention : QUALITY-OF-SERVICE MONITORING METHOD, DEVICE AND SYSTEM

(51) International classification	:H04W0072040000, H04L0005000000, H04L0001160000, H04J0011000000, H04L0012260000
(31) Priority Document No	:201810918390.9
(32) Priority Date	:13/08/2018
(33) Name of priority country	:China
(86) International Application No	:PCT/CN2019/100242
Filing Date	:12/08/2019
(87) International Publication No	:WO 2020/034922
(61) Patent of Addition to Application Number	:NA
Filing Date	:NA
(62) Divisional to Application Number	:NA
Filing Date	:NA

(71)**Name of Applicant :**
1)HUAWEI TECHNOLOGIES CO., LTD.
Address of Applicant :Huawei Administration Building, Bantian, Longgang District Shenzhen, Guangdong 518129 China
(72)**Name of Inventor :**
1)WU, Wenfu
2)ZHOU, Han
3)LI, Hancheng

(57) Abstract :
Embodiments of the present application provides a quality-of-service monitoring method, device and system, so that information about multiple segmented transmission latencies can be obtained in one segmented transmission latency information monitoring process. The quality-of-service monitoring method comprises: a first device obtains information about a first transmission latency corresponding to a terminal-related packet transmitted between the first device and a second device; the first device sends the information about the first transmission latency to a third device; and the first device sends, at a first moment, information related to the first moment to the third device, wherein the information about the first transmission latency and the information related to the first moment are used for determining information about a second transmission latency corresponding to the terminal-related packet transmitted between the second device and the third device.

No. of Pages : 72 No. of Claims : 19

(12) PATENT APPLICATION PUBLICATION
(19) INDIA
(22) Date of filing of Application :17/12/2020

(21) Application No.202017055086 A
(43) Publication Date : 05/03/2021

(54) Title of the invention : MOVABLE EMISSION CONTROL SYSTEM FOR AUXILIARY DIESEL ENGINES

(51) International classification	:F01N0013000000, F01N0003035000, F01N0003100000, B01D0053940000, F01N0003021000
(31) Priority Document No	:15/990344
(32) Priority Date	:25/05/2018
(33) Name of priority country	:U.S.A.
(86) International Application No	:PCT/US2019/031300
Filing Date	:08/05/2019
(87) International Publication No	:WO 2019/226348
(61) Patent of Addition to Application Number	:NA
Filing Date	:NA
(62) Divisional to Application Number	:NA
Filing Date	:NA

(71)**Name of Applicant :**
1)CLEAN AIR-ENGINEERING - MARITIME, INC.
Address of Applicant :2500 Via Cabrillo Marina, Suite 300 San Pedro, CA 90731 U.S.A.
(72)**Name of Inventor :**
1)TONSICH, Nicholas, G.

(57) Abstract :
A mobile emissions control system having an emission capturing system and emission control system is provided for diesel engines operated on ocean-going ships at-berth. The emissions control system may be mounted on a towable chassis or mounted on a barge, allowing it to be placed alongside ocean-going ships at-berth. A crane or boom transfers a duct of the emissions capturing system extending from the emissions control system to the ship to capture exhaust from its engine. Alternatively, the system may be mounted on an automated guided vehicle (AGV) equipped with a tower and a crane. The crane mounted on the AGV then lifts the duct forming part of the emissions capture system to the ship's exhaust system to capture exhaust from the ship's diesel engine and transfers it to the emissions control system, which cleans the exhaust and then passes clean air into the atmosphere through an exhaust outlet.

No. of Pages : 26 No. of Claims : 20

(12) PATENT APPLICATION PUBLICATION
(19) INDIA
(22) Date of filing of Application :18/12/2020
(21) Application No.202017055089 A
(43) Publication Date : 05/03/2021

(54) Title of the invention : ABSORBENT ARTICLE

(51) International classification	:A61F0013420000, G06F0001160000, D21H0021180000, A61F0013490000, G01P0015080000
(31) Priority Document No	:2018-096409
(32) Priority Date	:18/05/2018
(33) Name of priority country	:Japan
(86) International Application No	:PCT/JP2019/019562
Filing Date	:16/05/2019
(87) International Publication No	:WO 2019/221241
(61) Patent of Addition to Application Number	:NA
Filing Date	:NA
(62) Divisional to Application Number	:NA
Filing Date	:NA

(71)**Name of Applicant :**
1)UNICHARM CORPORATION
Address of Applicant :182, Shimobun, Kinsei-cho, Shikokuchuo-shi, Ehime 7990111 Japan
(72)**Name of Inventor :**
1)WATANABE, Sakiko
2)MIYAMA, Takuya
3)ISHIKAWA, Shinichi
4)SAKAGUCHI, Satoru

(57) Abstract :
Provided is an absorbent article which can improve the visibility of an indicator. An absorbent article (10) comprises an indicator pattern (80) which includes an indicator that changes color due to urine. The indicator pattern (80) has a high basis weight portion (81) and a low basis weight portion (82). The high basis weight portion (81) is provided on an edge of the indicator pattern (80) in one direction.

No. of Pages : 27 No. of Claims : 28

(12) PATENT APPLICATION PUBLICATION
(19) INDIA
(22) Date of filing of Application :18/12/2020

(21) Application No.202017055091 A
(43) Publication Date : 05/03/2021

(54) Title of the invention : METHOD FOR OBTAINING A DECORATIVE MIRROR

(51) International classification	:C03C0017340000, C03C0017360000, C03C0003087000, C03B0032000000, B05D0005060000
(31) Priority Document No	:1856944
(32) Priority Date	:26/07/2018
(33) Name of priority country	:France
(86) International Application No	:PCT/EP2019/068864
Filing Date	:12/07/2019
(87) International Publication No	:WO 2020/020671
(61) Patent of Addition to Application Number	:NA
Filing Date	:NA
(62) Divisional to Application Number	:NA
Filing Date	:NA

(71)**Name of Applicant :**
1)SAINT-GOBAIN GLASS FRANCE
Address of Applicant :12 place de l'Iris Tour Saint-Gobain 92400 Courbevoie France
(72)**Name of Inventor :**
1)MARIA, Juliette
2)YON, Alexia

(57) Abstract :
The subject of the invention is a method for obtaining a decorative mirror comprising reflective zones that form a pattern and non-reflective zones, said method comprising the following steps: - the supply of a sheet of soda-lime-silica glass coated with a reflective coating over the entirety of one of its faces, then - a step of applying a composition containing a phosphate salt to said reflective coating only in application zones, said application zones being the zones intended to become the non-reflective zones, then - a step of tempering said sheet of glass, in which said sheet of glass is subjected to a temperature of at least 550°C, causing the reflective coating to discern walls in the application zones so as to form said non-reflective zones in which the sheet of glass is not coated.

No. of Pages : 12 No. of Claims : 16

(12) PATENT APPLICATION PUBLICATION
(19) INDIA
(22) Date of filing of Application :18/12/2020
(21) Application No.202017055137 A
(43) Publication Date : 05/03/2021

(54) Title of the invention : ATMOSPHERIC-BALANCED VACUUM FOR BLOOD GAS SAMPLE STABILIZATION WITH AN EVACUATED CONTAINER

(51) International classification	:A61B0005150000, A61B0005154000, B01L0003000000, G01N0033490000, A61B0005145000
(31) Priority Document No	:62/684800
(32) Priority Date	:14/06/2018
(33) Name of priority country	:U.S.A.
(86) International Application No	:PCT/US2019/037017
Filing Date	:13/06/2019
(87) International Publication No	:WO 2019/241537
(61) Patent of Addition to Application Number	:NA
Filing Date	:NA
(62) Divisional to Application Number	:NA
Filing Date	:NA

(71)**Name of Applicant :**
1)BECTON, DICKINSON AND COMPANY
Address of Applicant :1 Becton Drive Franklin Lakes, New Jersey 07417 U.S.A.
(72)**Name of Inventor :**
1)BLAKE, Alexander, James
2)RAVERDY-WILSON, Sylvine
3)EDELHAUSER, Adam

(57) Abstract :
A biological liquid collection device designed to draw blood using an atmospheric-balanced vacuum to ensure the blood is exposed to the sample atmospheric partial pressure oxygen and partial pressure carbon dioxide levels as found in standard arterial blood gas syringes, resulting in blood gas sample stabilization during collection and a superior vacuum shelf-life by reducing the gas permeation rate through the plastic tube. The biological liquid collection device comprises a collection module for receiving a biological liquid sample, an evacuated container having an open end and a closed end wherein the evacuated container contains the collection module therein, and a closure for closing the open end of the evacuated container. The evacuated container comprises a gas composition that is substantially equal to the gas composition of the atmosphere outside of the evacuated container. A method for forming the atmospherically balanced vacuum collection device is also provided.

No. of Pages : 15 No. of Claims : 26

(12) PATENT APPLICATION PUBLICATION
(19) INDIA
(22) Date of filing of Application :18/12/2020
(21) Application No.202017055138 A
(43) Publication Date : 05/03/2021

(54) Title of the invention : A LITHOGRAPHIC PRINTING PLATE PRECURSOR

(51) International classification	:B41C0001100000, G03F0007300000, G03F0007031000, B01J0023000000, G03F0007105000
(31) Priority Document No	:18178924.9
(32) Priority Date	:21/06/2018
(33) Name of priority country	:EPO
(86) International Application No	:PCT/EP2019/064405
Filing Date	:04/06/2019
(87) International Publication No	:WO 2019/243037
(61) Patent of Addition to Application Number	:NA
Filing Date	:NA
(62) Divisional to Application Number	:NA
Filing Date	:NA

(71)**Name of Applicant :**
1)AGFA NV
Address of Applicant :Septestraat 27 2640 Mortsel Belgium
(72)**Name of Inventor :**
1)BILLIET, Thomas
2)HEYLEN, Kristof

(57) Abstract :
A lithographic printing plate precursor is disclosed including a support and a coating comprising (i) a photopolymerisable layer including a polymerisable compound and a photoinitiator, and a toplayer provided above the photopolymerisable layer; characterized in that the toplayer includes an leuco dye and a hydrophobic binder.

No. of Pages : 56 No. of Claims : 10

(12) PATENT APPLICATION PUBLICATION
(19) INDIA
(22) Date of filing of Application :18/12/2020
(21) Application No.202017055139 A
(43) Publication Date : 05/03/2021

(54) Title of the invention : METHOD OF IMPROVING THE CORROSION RESISTANCE OF A METAL SUBSTRATE

(51) International classification	:C09D0005440000, C08G0018800000, C09D0175040000, C09D0005240000, C23F0011173000
(31) Priority Document No	:16/015861
(32) Priority Date	:22/06/2018
(33) Name of priority country	:U.S.A.
(86) International Application No	:PCT/IB2019/054980
Filing Date	:14/06/2019
(87) International Publication No	:WO 2019/243973
(61) Patent of Addition to Application Number	:NA
Filing Date	:NA
(62) Divisional to Application Number	:NA
Filing Date	:NA

(71)**Name of Applicant :**
1)PPG INDUSTRIES OHIO, INC.
Address of Applicant :3800 West 143rd Street Cleveland, Ohio 44111 U.S.A.
(72)**Name of Inventor :**
1)BEZER, Silvia
2)ZAWACKY, Steven R.
3)PUODZIUKYNAITE, Egle

(57) Abstract :
The invention provides a method of improving the corrosion resistance of a metal substrate. The method comprises: (a) electrophoretically depositing on the substrate a curable electrodepositable coating composition to form a coating over at least a portion of the substrate, and (b) heating the substrate to a temperature and for a time sufficient to cure the coating on the substrate. The electrodepositable coating composition comprises a resinous phase dispersed in an aqueous medium, the resinous phase comprising: (1) an ungelled active hydrogen-containing, cationic salt group- containing resin electrodepositable on a cathode; (2) an at least partially blocked polyisocyanate curing agent; and (3) a pigment component comprising an inorganic, platelike pigment having an average equivalent spherical diameter of at least 0.2 microns. The electrodepositable coating composition demonstrates a pigment-to-binder ratio of at least 0.5. The coating composition contains less than 8 percent by weight of a grind vehicle.

No. of Pages : 35 No. of Claims : 11

(12) PATENT APPLICATION PUBLICATION
(19) INDIA
(22) Date of filing of Application :18/12/2020
(21) Application No.202017055141 A
(43) Publication Date : 05/03/2021

(54) Title of the invention : FUSED-CYCLIC PYRAZOLONE FORMAMIDE COMPOUND AND PREPARATION METHOD THEREFOR, PHARMACEUTICAL COMPOSITION AND USE THEREOF

(51) International classification	:A61P0035000000, C07D0401140000, C07D0471040000, C07D0405140000, A01N0043560000
(31) Priority Document No	:201810491115.3
(32) Priority Date	:21/05/2018
(33) Name of priority country	:China
(86) International Application No	:PCT/CN2019/087867
Filing Date	:21/05/2019
(87) International Publication No	:WO 2019/223704
(61) Patent of Addition to Application Number	:NA
Filing Date	:NA
(62) Divisional to Application Number	:NA
Filing Date	:NA

(71)**Name of Applicant :**
1)SHANGHAI INSTITUTE OF MATERIA MEDICA, CHINESE ACADEMY OF SCIENCES
Address of Applicant :555 Zu Chong Zhi Road, Zhang Jiang, Pudong Shanghai 201203 China
(72)**Name of Inventor :**
1)LIU, Hong
2)GENG, Meiyu
3)ZHOU, Yu
4)DING, Jian
5)FANG, Feifei
6)AI, Jing
7)LI, Jian
8)PENG, Xia
9)JIANG, Hualiang
10)JI, Yinchun
11)CHEN, Kaixian

(57) Abstract :
Provided are a class of fused-cyclic pyrazolone formamide compounds and a preparation method therefor, a pharmaceutical composition and the use thereof. Specifically, provided is a compound having the structure as shown in formula (I) (with each group defined in the description). The compound can be used as an AXL inhibitor in the preparation of a pharmaceutical composition for treating tumors.

No. of Pages : 74 No. of Claims : 10

(12) PATENT APPLICATION PUBLICATION
(19) INDIA
(22) Date of filing of Application :18/12/2020
(21) Application No.202017055144 A
(43) Publication Date : 05/03/2021

(54) Title of the invention : P-PHENYLENEDIAMINE DERIVATIVE AS POTASSIUM CHANNEL REGULATOR AND PREPARATION METHOD AND MEDICAL APPLICATION THEREOF

(51) International classification	:A61P0035000000, A61K0031167000, A61K0031554000, C07D0487040000, C07C0231020000
(31) Priority Document No	:201810493023.9
(32) Priority Date	:22/05/2018
(33) Name of priority country	:China
(86) International Application No	:PCT/CN2019/088012
Filing Date	:22/05/2019
(87) International Publication No	:WO 2019/223732
(61) Patent of Addition to Application Number	:NA
Filing Date	:NA
(62) Divisional to Application Number	:NA
Filing Date	:NA

(71)**Name of Applicant :**
1)SHANGHAI ZHIMENG BIOPHARMA, INC.
Address of Applicant :Room A302, A304, Building 1, 1976 Gaoke Middle Road China (Shanghai) Pilot Free Trade Zone, Pudong New Area Shanghai 201210 China
(72)**Name of Inventor :**
1)CHEN, Huanming
2)LIANG, Bo

(57) Abstract :
The present invention relates to a p-phenylenediamine derivative as a potassium channel regulator and a preparation method and medical application thereof. In particular, disclosed is a compound represented by general formula A or a pharmaceutically acceptable salt thereof. Also disclosed are a preparation method of the compound and a use of the same as a potassium channel opener.

No. of Pages : 59 No. of Claims : 10

(12) PATENT APPLICATION PUBLICATION
(19) INDIA
(22) Date of filing of Application :18/12/2020

(21) Application No.202017055145 A
(43) Publication Date : 05/03/2021

(54) Title of the invention : A LITHOGRAPHIC PRINTING PLATE PRECURSOR

(51) International classification	:B41C0001100000, G03F0007200000, G03F0007320000, G03F0007300000, G03F0007031000
(31) Priority Document No	:18178933.0
(32) Priority Date	:21/06/2018
(33) Name of priority country	:EPO
(86) International Application No	:PCT/EP2019/064399
Filing Date	:04/06/2019
(87) International Publication No	:WO 2019/243036
(61) Patent of Addition to Application Number	:NA
Filing Date	:NA
(62) Divisional to Application Number	:NA
Filing Date	:NA

(71)**Name of Applicant :**
1)AGFA NV
Address of Applicant :Septestraat 27 2640 Mortsel Belgium
(72)**Name of Inventor :**
1)BILLIET, Thomas
2)HEYLEN, Kristof
3)VAN AERT, Hubertus

(57) Abstract :
A lithographic printing plate precursor is disclosed including a support and a coating comprising (i) a photopolymerisable layer including a polymerisable compound and a photoinitiator, and a toplayer provided above the photopolymerisable layer; characterized in that the toplayer includes a hydrophobic binder.

No. of Pages : 57 No. of Claims : 10

(12) PATENT APPLICATION PUBLICATION
(21) Application No.202017055155 A
(19) INDIA
(22) Date of filing of Application :18/12/2020
(43) Publication Date : 05/03/2021

(54) Title of the invention : LIQUID IRRADIATION SYSTEM

(51) International classification	:C02F0001300000, A61N0005100000, G21K0005040000, G21K0001100000, G21K0005100000
(31) Priority Document No	:201810758766.4
(32) Priority Date	:11/07/2018
(33) Name of priority country	:China
(86) International Application No	:PCT/CN2018/110833
Filing Date	:18/10/2018
(87) International Publication No	:WO 2020/010744
(61) Patent of Addition to Application Number	:NA
Filing Date	:NA
(62) Divisional to Application Number	:NA
Filing Date	:NA

(71)**Name of Applicant :**
1)CGN DASHENG ELECTRON ACCELERATOR TECHNOLOGY CO., LTD
Address of Applicant :Shexi Road, Beishe, Lili, Wujiang Suzhou, Jiangsu 215212 China
(72)**Name of Inventor :**
1)ZHU, Huanzheng
2)CHEN, Chuanhong
3)XU, Senfei
4)LI, Jianhui
5)DING, Shaochun
6)ZHU, Xiao

(57) Abstract :
A liquid irradiation system, comprising: a liquid irradiation device, an electron accelerator (15), a liquid input device, and a liquid output device. The liquid irradiation device comprises a storage box (10) and a beam receiving port (3) disposed on a box cover (6) of the storage box (10), wherein the beam receiving port (3) is covered with a titanium foil and aligned with a beam extraction window (1) of the electron accelerator (15). The liquid input device comprises a nozzle (4). The nozzle (4) is arranged such that a beam (2) from the electron accelerator (15) passes through the titanium foil, and irradiates a liquid stream ejected from the nozzle (4). The system protects the titanium foil and the electron accelerator (15), and can prolong the service life of the liquid irradiation system.

No. of Pages : 6 No. of Claims : 10

(12) PATENT APPLICATION PUBLICATION
(21) Application No.202017055161 A
(19) INDIA
(22) Date of filing of Application :18/12/2020
(43) Publication Date : 05/03/2021

(54) Title of the invention : BINDING AGENT COMPOSITION FOR FOUNDRY MOLDING

(51) International classification	:B22C0001220000, B22C0003000000, B22C0001000000, B22C0001100000, B22F0003220000
(31) Priority Document No	:NA
(32) Priority Date	:NA
(33) Name of priority country	:NA
(86) International Application No	:PCT/JP2018/030391
Filing Date	:16/08/2018
(87) International Publication No	:WO 2020/035923
(61) Patent of Addition to Application Number	:NA
Filing Date	:NA
(62) Divisional to Application Number	:NA
Filing Date	:NA

(71)**Name of Applicant :**
1)KAO CORPORATION
Address of Applicant :14-10, Nihonbashi Kayabacho 1-chome, Chuo-ku, Tokyo 1038210 Japan
(72)**Name of Inventor :**
1)AONUMA,Hiroaki
2)MATSUO,Toshiki

(57) Abstract :
This binding agent composition for foundry molding contains: a furan resin; water; a sugar; and a compatible binding agent component. According to this binding agent composition for foundry molding, it is possible to provide a binding agent composition for foundry molding which, while using sugars, does not require a denaturing step, and with which it possible to curb economic costs and energy costs.

No. of Pages : 33 No. of Claims : 7

(12) PATENT APPLICATION PUBLICATION
(19) INDIA
(22) Date of filing of Application :18/12/2020
(21) Application No.202017055164 A
(43) Publication Date : 05/03/2021

(54) Title of the invention : MUTANT OF HUMAN PAPILLOMAVIRUS TYPE 39 L1 PROTEIN

(51) International classification	:A61K0039000000, A61P0031200000, C07K0014025000, A61K0039120000, C12N0007000000
(31) Priority Document No	:201810563378.0
(32) Priority Date	:04/06/2018
(33) Name of priority country	:China
(86) International Application No	:PCT/CN2019/089988
Filing Date	:04/06/2019
(87) International Publication No	:WO 2019/233415
(61) Patent of Addition to Application Number	:NA
Filing Date	:NA
(62) Divisional to Application Number	:NA
Filing Date	:NA

(71)**Name of Applicant :**
1)XIAMEN UNIVERSITY
Address of Applicant :No.422 Si Ming Nan Road, Siming District Xiamen, Fujian 361005 China
2)XIAMEN INNOVAX BIOTECH CO. , LTD.
(72)**Name of Inventor :**
1)LI, Shaowei
2)WANG, Daning
3)WANG, Zhiping
4)LIU, Xinlin
5)ZHANG, Jun
6)XIA, Ningshao

(57) Abstract :
Involved are a mutated HPV39 L1 protein (or a variant thereof), the coding sequence thereof and a preparation method therefor, as well as a virus-like particle comprising same. The protein (or a variant thereof) and the virus-like particle are capable of inducing a neutralizing antibody combating at least two types of HPVs (such as HPV39 and HPV68, or HPV39, HPV68 and HPV70), and thus can be used for preventing infections of the at least two types of HPVs and diseases caused by the infections, such as cervical cancer and condylomata acuminata. Also involved are the uses of the protein and the virus-like particle in the preparation of a pharmaceutical composition or a vaccine. The pharmaceutical composition or vaccine can be used for preventing infections of the at least two types of HPVs and diseases caused by the infections, such as cervical cancer and condylomata acuminata.

No. of Pages : 45 No. of Claims : 12

(12) PATENT APPLICATION PUBLICATION
(19) INDIA
(22) Date of filing of Application :18/12/2020
(21) Application No.202017055166 A
(43) Publication Date : 05/03/2021

(54) Title of the invention : TRIAZOLOTRIAZINE DERIVATIVES AS A2A RECEPTOR ANTAGONISTS

(51) International classification	:C07D0487040000, A61K0031519000, A61K0045060000, C07D0405120000, C07D0401140000
(31) Priority Document No	:NA
(32) Priority Date	:NA
(33) Name of priority country	:NA
(86) International Application No	:PCT/IB2018/054690
Filing Date	:26/06/2018
(87) International Publication No	:WO 2020/002968
(61) Patent of Addition to Application Number	:NA
Filing Date	:NA
(62) Divisional to Application Number	:NA
Filing Date	:NA

(71)**Name of Applicant :**
1)ZHEJIANG VIMGREEN PHARMACEUTICALS, LTD
Address of Applicant :1500 West Wenyi Road, Building 4, Room 1606 Hangzhou, Zhejiang 311122 China
(72)**Name of Inventor :**
1)SUN, Sanxing
2)YE, Jinqi
3)ZHAO, Long
4)HU, Chongbo
5)CHEN, Zhengshu

(57) Abstract :
The present invention provides triazolotriazine derivatives of formula (1) as A2A receptor antagonists. Compounds of formula (1) and pharmaceutical compositions including the compounds can be used for the treatment of disorders related to A2A receptor hyperfunctioning, such as certain types cancers. Compounds of formula (1) and methods of preparing the compounds are disclosed in the invention.

No. of Pages : 69 No. of Claims : 8

(12) PATENT APPLICATION PUBLICATION
(19) INDIA
(22) Date of filing of Application :18/12/2020
(21) Application No.202017055167 A
(43) Publication Date : 05/03/2021

(54) Title of the invention : MUTANT OF HUMAN PAPILLOMAVIRUS TYPE 66 L1 PROTEIN

(51) International classification	:A61K0039000000, C07K0014005000, A61K0039120000, C07K0014025000, A61P0031200000
(31) Priority Document No	:201810563504.2
(32) Priority Date	:04/06/2018
(33) Name of priority country	:China
(86) International Application No	:PCT/CN2019/089940
Filing Date	:04/06/2019
(87) International Publication No	:WO 2019/233400
(61) Patent of Addition to Application Number	:NA
Filing Date	:NA
(62) Divisional to Application Number	:NA
Filing Date	:NA

(71)**Name of Applicant :**
1)XIAMEN UNIVERSITY
Address of Applicant :No.422 Si Ming Nan Road, Siming District Xiamen, Fujian 361005 China
2)XIAMEN INNOVAX BIOTECH CO., LTD.
(72)**Name of Inventor :**
1)LI, Shaowei
2)LIU, Xinlin
3)YANG, Yurou
4)CHEN, Jie
5)WANG, Daning
6)XIA, Ningshao

(57) Abstract :
The present invention relates to a mutated HPV 66 L1 protein (or a mutant thereof), a coding sequence thereof and a preparation method therefor, and a virus-like particle comprising same. The protein (or the mutant thereof) and the virus-like particle can induce a neutralizing antibody against at least two HPV types (for example, HPV 66 and HPV 56, or HPV 66, HPV 56, and HPV 53), and thus can be used for preventing infections with the at least two HPV types and diseases caused by the infections, such as cervical cancer and condylomata acuminata. The present invention also relates to applications of the protein and of the virus-like particle in preparation of a pharmaceutical composition or vaccine. The pharmaceutical composition or vaccine can be used for preventing infections with the at least two HPV types and diseases caused by the infections, such as cervical cancer and condylomata acuminata.

No. of Pages : 43 No. of Claims : 12

(12) PATENT APPLICATION PUBLICATION
(19) INDIA
(22) Date of filing of Application :18/12/2020

(21) Application No.202017055168 A
(43) Publication Date : 05/03/2021

(54) Title of the invention : FULL BODY DECORATION OF BLOW MOLDED TUBES

(51) International classification	:B29L0031000000, B29D0023200000, B29L0023200000, B29C0049240000, B29C0065020000
(31) Priority Document No	:62/687854
(32) Priority Date	:21/06/2018
(33) Name of priority country	:U.S.A.
(86) International Application No	:PCT/US2019/038463
Filing Date	:21/06/2019
(87) International Publication No	:WO 2019/246517
(61) Patent of Addition to Application Number	:NA
Filing Date	:NA
(62) Divisional to Application Number	:NA
Filing Date	:NA

(71)**Name of Applicant :**
1)MULTI-COLOR CORPORATION
Address of Applicant :4053 Clough Woods Drive Batavia, OH 45103 U.S.A.
(72)**Name of Inventor :**
1)MCKILLIP, Barron, G.

(57) Abstract :
A process for producing a tube (36), comprising forming a blow- molded article and removing a bottom portion of said blow-molded article. The blow-molded article includes (i) a head portion (64), and (ii) a tube portion (66) integral with said head portion. The tube may be decorated, such as with a label (72).

No. of Pages : 10 No. of Claims : 12

(12) PATENT APPLICATION PUBLICATION
(21) Application No.202017055177 A
(19) INDIA
(22) Date of filing of Application :18/12/2020
(43) Publication Date : 05/03/2021

(54) Title of the invention : GLASS MADE LUER TIP WITH MARKING MEANS AND METHOD FOR MANUFACTURING THE SAME

(51) International classification	:A61M0005310000, A61M0039100000, A61M0039260000, A61M0039120000, A61M0005340000	(71)**Name of Applicant :** **1)BECTON DICKINSON FRANCE** Address of Applicant :Rue Aristide Berg¨s 38800 LE PONT-DE-CLAIX France (72)**Name of Inventor :** **1)RIVIER, Cdric**
(31) Priority Document No	:18305940.1	
(32) Priority Date	:12/07/2018	
(33) Name of priority country	:EPO	
(86) International Application No	:PCT/EP2019/067744	
Filing Date	:02/07/2019	
(87) International Publication No	:WO 2020/011603	
(61) Patent of Addition to Application Number	:NA	
Filing Date	:NA	
(62) Divisional to Application Number	:NA	
Filing Date	:NA	

(57) Abstract :
The present invention relates to a glass luer tip (1) with marking means (4) for completing a leak-free luer slip connection with a female fitting. The invention also relates to a method for manufacturing such a marked glass luer tip (1). The method further relates to the use of such a marked glass luer tip (1) for completing a leak-free luer slip connection.

No. of Pages : 11 No. of Claims : 15

(12) PATENT APPLICATION PUBLICATION
(19) INDIA
(22) Date of filing of Application :18/12/2020
(21) Application No.202017055191 A
(43) Publication Date : 05/03/2021

(54) Title of the invention : ELECTRICAL INSULATION MATERIAL COMPRISING A MIXTURE OF MICROMETRIC INORGANIC FILLERS AND MANUFACTURING PROCESS

(51) International classification	:C08K0003013000, C08K0003380000, H01M0010052000, H01B0003400000, C08G0059420000	(71)**Name of Applicant :** **1)SUPERGRID INSTITUTE** Address of Applicant :23 rue Cyprian 69100 VILLEURBANNE France **2)INSTITUT NATIONAL DES SCIENCES APPLIQUEES DE LYON** **3)CENTRE NATIONAL DE LA RECHERCHE SCIENTIFIQUE**
(31) Priority Document No	:1856761	
(32) Priority Date	:20/07/2018	
(33) Name of priority country	:France	
(86) International Application No	:PCT/FR2019/051795	(72)**Name of Inventor :** **1)DESMARS, Loriane** **2)BACHELLERIE, Damien** **3)PRUVOST, Sbastien** **4)GALY, Jocelyne** **5)HALLER, Servane**
Filing Date	:17/07/2019	
(87) International Publication No	:WO 2020/016525	
(61) Patent of Addition to Application Number	:NA	
Filing Date	:NA	
(62) Divisional to Application Number	:NA	
Filing Date	:NA	

(57) Abstract :
The invention relates to a composite electrical insulation material (1) comprising an epoxy matrix (2) of cycloaliphatic type or of diglycidyl ether type, and from 15 to 45% of fillers, including a first micrometric inorganic filler (3) having an aspect ratio of less than 3 and a lamellar second micrometric inorganic filler (4) in a volume ratio ranging from 95/05 to 40/60. The invention also relates to the process for manufacturing such a composite electrical insulation material (1), and also to the use thereof for electrically insulating supports (9) in a metal-enclosed substation (5).

No. of Pages : 20 No. of Claims : 17

(12) PATENT APPLICATION PUBLICATION
(19) INDIA
(22) Date of filing of Application :18/12/2020
(21) Application No.202017055194 A
(43) Publication Date : 05/03/2021

(54) Title of the invention : METHOD FOR PRODUCING DRIED EDIBLE PLANT COMPOSITION, DRYING METHOD, DRIED EDIBLE PLANT COMPOSITION AND FOOD AND BEVERAGE

(51) International classification	:A23L0017000000, A23L0029000000, A23G0001000000, A23B0007022000, A23G0003560000
(31) Priority Document No	:2018-243734
(32) Priority Date	:26/12/2018
(33) Name of priority country	:Japan
(86) International Application No	:PCT/JP2019/031588
Filing Date	:09/08/2019
(87) International Publication No	:WO 2020/136981
(61) Patent of Addition to Application Number	:NA
Filing Date	:NA
(62) Divisional to Application Number	:NA
Filing Date	:NA

(71)**Name of Applicant :**
1)MIZKAN HOLDINGS CO., LTD.
Address of Applicant :6, Nakamura-cho 2-chome, Handa-shi, Aichi 4758585 Japan
(72)**Name of Inventor :**
1)SAITO, Takeki
2)KAKUDA, Hiroyuki
3)KATSUKI, Mao

(57) Abstract :
Provided are: a method for improving drying efficiency for easily producing a dried edible plant composition using an edible plant without requiring any special device or condition, while maintaining the characteristic fresh taste and color tone inherent to the food; and a dried edible plant composition having improved qualities that is obtained by the aforesaid method. A method for producing a dried edible plant composition which contains, in a dried state, 3-70 mass% inclusive of the non-edible portion of the edible plant relative to the total mass of the edible and non-edible portions thereof, said method comprising a step for grinding and mixing the edible and non-edible portions, followed by forced-air drying at a temperature of 20-80°C inclusive until the moisture content reaches 20 mass% or less.

No. of Pages : 66 No. of Claims : 16

(12) PATENT APPLICATION PUBLICATION
(19) INDIA
(22) Date of filing of Application :18/12/2020

(21) Application No.202017055195 A
(43) Publication Date : 05/03/2021

(54) Title of the invention : TRIAZOLOTRIAZINE DERIVATIVES AS A2A RECEPTOR ANTAGONISTS

(51) International classification	:C07D0487040000, A61K0031519000, A61K0045060000, C07D0405120000, C07D0401140000
(31) Priority Document No	:NA
(32) Priority Date	:NA
(33) Name of priority country	:NA
(86) International Application No	:PCT/IB2018/054691
Filing Date	:26/06/2018
(87) International Publication No	:WO 2020/002969
(61) Patent of Addition to Application Number	:NA
Filing Date	:NA
(62) Divisional to Application Number	:NA
Filing Date	:NA

(71)**Name of Applicant :**
1)ZHEJIANG VIMGREEN PHARMACEUTICALS, LTD
Address of Applicant :1500 West Wenyi Road, Building 4, Room 1606 Hangzhou, Zhejiang 311122 China
(72)**Name of Inventor :**
1)SUN, Sanxing
2)ZHAO, Long
3)HU, Chongbo
4)CHEN, Zhengshu
5)YE, Jinqi

(57) Abstract :
The present invention provides triazolotriazine derivatives of formula (1) as A2A receptor antagonists. Compounds of formula (1) and pharmaceutical compositions including the compounds can be used for the treatment of disorders related to A2A receptor hyperfunctioning, such as certain types cancers. Compounds of formula (1) and methods of preparing the compounds are disclosed in the invention.

No. of Pages : 152 No. of Claims : 8

(12) PATENT APPLICATION PUBLICATION
(19) INDIA
(22) Date of filing of Application :18/12/2020

(21) Application No.202017055196 A
(43) Publication Date : 05/03/2021

(54) Title of the invention : SELECTIVELY PERFORMING AHEAD BRANCH PREDICTION BASED ON TYPES OF BRANCH INSTRUCTIONS

(51) International classification	:G06F0009380000, G06F0009350000, B60C0011120000, H01G0004120000, H04L0029120000
(31) Priority Document No	:16/011010
(32) Priority Date	:18/06/2018
(33) Name of priority country	:U.S.A.
(86) International Application No	:PCT/US2019/036967
Filing Date	:13/06/2019
(87) International Publication No	:WO 2019/245846
(61) Patent of Addition to Application Number	:NA
Filing Date	:NA
(62) Divisional to Application Number	:NA
Filing Date	:NA

(71)**Name of Applicant :**
1)ADVANCED MICRO DEVICES, INC.
Address of Applicant :2485 Augustine Drive Santa Clara, California 95054 U.S.A.
(72)**Name of Inventor :**
1)EVERS, Marius
2)THYAGARAJAN, Aparna
3)VENKATACHAR, Ashok T.

(57) Abstract :
A set of entries in a branch prediction structure [500] for a set of second blocks [310, 315] are accessed based on a first address of a first block [305]. The set of second blocks correspond to outcomes of one or more first branch instructions in the first block. Speculative prediction of outcomes of second branch instructions in the second blocks is initiated based on the entries in the branch prediction structure. State associated with the speculative prediction is selectively flushed based on types of the branch instructions.

No. of Pages : 26 No. of Claims : 15

(12) PATENT APPLICATION PUBLICATION
(21) Application No.202017055202 A
(19) INDIA
(22) Date of filing of Application :18/12/2020
(43) Publication Date : 05/03/2021

(54) Title of the invention : COMMUNICATION SYSTEM, HOST DEVICE, COLLECTION DEVICE, AND COMMUNICATION METHOD

(51) International classification	:H04W0008260000, H04W0074000000, H04W0088040000, H04W0024080000, H04W0088060000
(31) Priority Document No	:2018-139233
(32) Priority Date	:25/07/2018
(33) Name of priority country	:Japan
(86) International Application No	:PCT/JP2019/015440
Filing Date	:09/04/2019
(87) International Publication No	:WO 2020/021779
(61) Patent of Addition to Application Number	:NA
Filing Date	:NA
(62) Divisional to Application Number	:NA
Filing Date	:NA

(71)**Name of Applicant :**
1)SUMITOMO ELECTRIC INDUSTRIES, LTD.
Address of Applicant :5-33, Kitahama 4-chome, Chuo-ku, Osaka-shi, Osaka 5410041 Japan
(72)**Name of Inventor :**
1)MARUYAMA,Takeshi
2)KOJIMA,Takao
3)KUROIWA,Satoshi
4)IWAMA,Narumi
5)SAKAI,Osamu

(57) Abstract :
This communication system is provided with a plurality of monitoring devices that transfer information, collection devices that acquire the information transferred by the monitoring devices, and a host device. The host device holds list information about first terminal identifiers used in a lower-order layer in communication between the host device and the collection devices, and list information about second terminal identifiers used in a lower-order layer in communication between the collection devices and the monitoring devices. Different second terminal identifiers are fixedly assigned to the monitoring devices, the collection devices, and the host device. The monitoring devices, the collection devices, and the host device each transmit/receive packets in which a second terminal identifier is stored as a transmission source address and a transmission destination address.

No. of Pages : 49 No. of Claims : 5

(12) PATENT APPLICATION PUBLICATION
(19) INDIA
(22) Date of filing of Application :18/12/2020
(21) Application No.202017055238 A
(43) Publication Date : 05/03/2021

(54) Title of the invention : HEAT EXCHANGER

(51) International classification	:F28F0009020000, F28F0009160000, F28D0021000000, F28D0007160000, F28D0001053000
(31) Priority Document No	:10 2018 112 907.6
(32) Priority Date	:30/05/2018
(33) Name of priority country	:Germany
(86) International Application No	:PCT/EP2019/064016
Filing Date	:29/05/2019
(87) International Publication No	:WO 2019/229148
(61) Patent of Addition to Application Number	:NA
Filing Date	:NA
(62) Divisional to Application Number	:NA
Filing Date	:NA

(71)**Name of Applicant :**
1)WILK, Andreas
Address of Applicant :Unterer Rheinweg 88 4057 Basel Switzerland
2)FENG, Shengjun
(72)**Name of Inventor :**
1)WILK, Andreas
2)FENG, Shengjun

(57) Abstract :
The invention relates to a heat exchanger having one and preferably a plurality of tubes which extend from a tube base through a heat exchange chamber, wherein the tube base is produced from a fiber-reinforced plastic material. The invention further relates to a method for producing such a heat exchanger and to the use of such a heat exchanger.

No. of Pages : 8 No. of Claims : 10

(12) PATENT APPLICATION PUBLICATION
(19) INDIA
(22) Date of filing of Application :18/12/2020

(21) Application No.202017055245 A
(43) Publication Date : 05/03/2021

(54) Title of the invention : QUALITY OF SERVICE REALIZATION IN MULTI-HOP DATA FORWARDING

(51) International classification	:H04W0072120000, H04W0028020000, H04L0012725000, H04L0012841000, H04W0072040000
(31) Priority Document No	:62/687478
(32) Priority Date	:20/06/2018
(33) Name of priority country	:U.S.A.
(86) International Application No	:PCT/US2019/038216
Filing Date	:20/06/2019
(87) International Publication No	:WO 2019/246382
(61) Patent of Addition to Application Number	:NA
Filing Date	:NA
(62) Divisional to Application Number	:NA
Filing Date	:NA

(71)**Name of Applicant :**
1)CONVIDA WIRELESS, LLC
Address of Applicant :200 Bellevue Parkway Suite 300 Wilmington, DE 19809-3727 U.S.A.
(72)**Name of Inventor :**
1)ADJAKPLE, Pascal, M.
2)TERRY, Stephen, E.
3)LI, Qing
4)MURRAY, Joseph, M.
5)IYER, Lakshmi, R.
6)ZHANG, Guodong
7)AWADIN, Mohamed
8)LI, Yifan
9)TSAI, Allan, Y.

(57) Abstract :
Logical Channel Prioritization (LCP) may be enhanced by accounting for Quality of Service (QoS) attributes of single hop and multi-hop paths. QoS attributes may be communicated as a QoS budget comprising a number of attributes, or as a single composite QoS resistance factor that quantifies the compounded impact of number of hops, latency, load conditions, and the like. The QoS budget or resistance may dynamically adjusted, and may be used by LCP to provide differentiated uplink resource allocation to data of the bearer or logical channel subject to different transmission paths between the transmitter and the receiver, for example. QoS budget and resistance information may be used to, e.g., enhance Buffer Status Report (BSR) and Scheduling Request (SR) operations.

No. of Pages : 34 No. of Claims : 21

(12) PATENT APPLICATION PUBLICATION
(19) INDIA
(22) Date of filing of Application :18/12/2020
(21) Application No.202017055246 A
(43) Publication Date : 05/03/2021

(54) Title of the invention : ZINC-CONTAINING, WATER-SOLUBLE POLYGLUTAMIC ACID COMPLEX COMPOSITION

(51) International classification	:A61K0009000000, A61K0047640000, A61K0008880000, A61K0033300000, A23L0033100000
(31) Priority Document No	:10-2018-0074477
(32) Priority Date	:28/06/2018
(33) Name of priority country	:Republic of Korea
(86) International Application No	:PCT/KR2018/010881
Filing Date	:17/09/2018
(87) International Publication No	:WO 2020/004712
(61) Patent of Addition to Application Number	:NA
Filing Date	:NA
(62) Divisional to Application Number	:NA
Filing Date	:NA

(71)**Name of Applicant :**
1)ALEXTAND CO., LTD.
Address of Applicant :612, 21-30, Heolleung-ro 569-gil Gangnam-gu, Seoul 06376 Republic of Korea
(72)**Name of Inventor :**
1)BAE, Jin Ho

(57) Abstract :
A stable zinc polyglutamic acid complex well soluble in water was prepared by conjugating zinc to polyglutamic acid, and then was made into a capsule or injection formulation. It was verified that such a substance not only acts as a zinc supplier necessary for our bodies but also shows an anticancer effect on cancer cells and an alleviating effect on pollinosis caused from the stimulation of mucous membrane by pollen. Therefore, the purpose of the present invention is to prepare and provide a composition usable in humans, animals, and plants.

No. of Pages : 31 No. of Claims : 16

(12) PATENT APPLICATION PUBLICATION
(19) INDIA
(22) Date of filing of Application :18/12/2020

(21) Application No.202017055253 A
(43) Publication Date : 05/03/2021

(54) Title of the invention : TRANSMITTING AND RECEIVING DATA SYMBOLS

(51) International classification	:H04L0027300000, G09G0003323300, H04W0048100000, G07C0005080000, G09G0003293000
(31) Priority Document No	:NA
(32) Priority Date	:NA
(33) Name of priority country	:NA
(86) International Application No	:PCT/EP2018/066984
Filing Date	:25/06/2018
(87) International Publication No	:WO 2020/001737
(61) Patent of Addition to Application Number	:NA
Filing Date	:NA
(62) Divisional to Application Number	:NA
Filing Date	:NA

(71)**Name of Applicant :**
1)TELEFONAKTIEBOLAGET LM ERICSSON (PUBL)
Address of Applicant :. SE-164 83 Stockholm Sweden
(72)**Name of Inventor :**
1)WILHELMSSON, Leif
2)SUNDMAN, Dennis
3)LOPEZ, Miguel

(57) Abstract :
In one example aspect, a method is provided of transmitting a plurality of data symbols. The method comprises transmitting a first on-off keyed signal corresponding to the data symbols, the first signal comprising a plurality of on periods and a plurality of off periods. Each on period comprises a first signal portion cyclically shifted within the on period by a respective random or pseudorandom factor.

No. of Pages : 11 No. of Claims : 31

(12) PATENT APPLICATION PUBLICATION
(19) INDIA
(22) Date of filing of Application :18/12/2020
(21) Application No.202017055257 A
(43) Publication Date : 05/03/2021

(54) Title of the invention : WATER-IN-FUEL SENSOR WITH CAVITY FOR DETECTION AT GRADE

(51) International classification	:B01D0036000000, G01F0001000000, B01D0029230000, B01D0029110000, G01L0009000000
(31) Priority Document No	:16/006933
(32) Priority Date	:13/06/2018
(33) Name of priority country	:U.S.A.
(86) International Application No	:PCT/US2019/036876
Filing Date	:13/06/2019
(87) International Publication No	:WO 2019/241460
(61) Patent of Addition to Application Number	:NA
Filing Date	:NA
(62) Divisional to Application Number	:NA
Filing Date	:NA

(71)**Name of Applicant :**
1)CATERPILLAR INC.
Address of Applicant :100 NE Adams Street Peoria, Illinois 61629-9510 U.S.A.
(72)**Name of Inventor :**
1)MOREHOUSE III, Darrell L.
2)MORRIS, Bryant
3)RIES, Jeffrey R.

(57) Abstract :
A system comprising a drain for a fuel-water separator (FWS) assembly and a sensor is disclosed. The sensor may include a sensing element that is attached to the drain, wherein, when the drain engages the FWS assembly, a cavity is formed by an endcap at least partially within the FWS assembly and by at least one of the drain or the sensor, wherein the sensing element is exposed within the cavity, wherein a first side of the cavity is at least partially open, and wherein a second side of the cavity is formed by at least one of the drain or the sensor, wherein the cavity is configured to receive fluid through the first side and collect the fluid in the cavity to trigger the sensing element. Numerous other aspects and systems are disclosed.

No. of Pages : 11 No. of Claims : 10

(12) PATENT APPLICATION PUBLICATION
(19) INDIA
(22) Date of filing of Application :18/12/2020
(21) Application No.202017055259 A
(43) Publication Date : 05/03/2021

(54) Title of the invention : SEPARATIONS SYSTEM FOR RECOVERING HYDROCARBONS FROM SYNTHESIS OF POLYETHYLENE POLYMERS

(51) International classification	:B01D0003000000, B01D0003140000, C10G0021000000, B01D0017020000, C07C0007040000
(31) Priority Document No	:62/685403
(32) Priority Date	:15/06/2018
(33) Name of priority country	:U.S.A.
(86) International Application No	:PCT/US2019/036703
Filing Date	:12/06/2019
(87) International Publication No	:WO 2019/241341
(61) Patent of Addition to Application Number	:NA
Filing Date	:NA
(62) Divisional to Application Number	:NA
Filing Date	:NA

(71)**Name of Applicant :**
1)DOW GLOBAL TECHNOLOGIES LLC
Address of Applicant :2211 H.H. Dow Way Midland, MI 48674 U.S.A.
(72)**Name of Inventor :**
1)BLOOD, Mark, W.
2)SHERMAN, Brent, J.

(57) Abstract :
The present disclosure provides for a separations system for separating ethylene, 2-methylbutane and at least one unsubstituted (C6-C12) hydrocarbon in a multi-component condensate mixture. The separations system includes a feed conduit in fluid communication with a source of the multi-component condensate mixture, a stripper column in fluid communication with the feed conduit, where the stripper column separates the multi-component condensate mixture into a heavies component mixture with at least one unsubstituted (C6-C12) hydrocarbon, and a top mixture having a medium component (s) that include at least the 2-methylbutane and a light component (s) that include at least the ethylene. The separations system further includes a flash drum that separates the top mixture into the medium component (s) and the light component (s). The separations system does not include a distillation column disposed between the source of the multi-component condensate mixture and the flash drum.

No. of Pages : 19 No. of Claims : 10

(12) PATENT APPLICATION PUBLICATION
(19) INDIA
(22) Date of filing of Application :18/12/2020

(21) Application No.202017055262 A
(43) Publication Date : 05/03/2021

(54) Title of the invention : THINNING OF RAZOR BLADE COATINGS

(51) International classification	:H01L0021780000, B26B0021400000, B26B0021220000, A61K0047360000, B29C0063000000
(31) Priority Document No	:18192034.9
(32) Priority Date	:31/08/2018
(33) Name of priority country	:EPO
(86) International Application No	:PCT/EP2019/071670
Filing Date	:13/08/2019
(87) International Publication No	:WO 2020/043476
(61) Patent of Addition to Application Number	:NA
Filing Date	:NA
(62) Divisional to Application Number	:NA
Filing Date	:NA

(71)**Name of Applicant :**
1)BIC VIOLEX S.A.
Address of Applicant :58 Agiou Athanasiou St. 14569 ANOIXI Greece
(72)**Name of Inventor :**
1)PANDIS, Christos
2)MAVROIDIS, Konstantinos
3)KANAKARIS, George

(57) Abstract :
The invention relates to a method of thinning a coating applied on a razor blade. The method comprises providing a thinning material having a Shore OO hardness in a range of 10-100, more specifically 20-70; contacting the thinning material with an edge of the razor blade, and moving the thinning material relative to the edge of the razor blade such that a shear force is applied on the edge of the razor blade thereby removing at least a portion of the coating applied on the edge of the razor blade.

No. of Pages : 14 No. of Claims : 15

(12) PATENT APPLICATION PUBLICATION
(19) INDIA
(22) Date of filing of Application :18/12/2020

(21) Application No.202017055278 A
(43) Publication Date : 05/03/2021

(54) Title of the invention : A SOUND-PROOF AND HYGIENIC SPACE

(51) International classification	:E05D0015060000, E04H0001140000, E04B0001620000, A61L0009180000, E06B0003460000
(31) Priority Document No	:20185467
(32) Priority Date	:21/05/2018
(33) Name of priority country	:Finland
(86) International Application No	:PCT/FI2019/050340
Filing Date	:29/04/2019
(87) International Publication No	:WO 2019/224422
(61) Patent of Addition to Application Number	:NA
Filing Date	:NA
(62) Divisional to Application Number	:NA
Filing Date	:NA

(71)**Name of Applicant :**
1)VETROSPACE OY
Address of Applicant :Otto Korhosen katu 1 20660 Littoinen Finland
(72)**Name of Inventor :**
1)URPOLAHTI, Jouko

(57) Abstract :
An enclosed space is provided that includes: (i) a ceiling(104), (ii) a base structure(110), (iii) a plurality of walls, (iv) at least one sliding door (120), (v) a controller(150), (vi) an input air fan(140) and(vii) an air outlet. The height and inclination of the base structure are adjustable and wherein said base structure (110) comprises a first profile (700); a second profile (702); and one or more bolts (704) for arranging a tilting angle between said first profile (700) and said second profile (702). At least one of the walls include an opening for accessing the enclosed space. The door includes two parallel glass panels. The input air fan includes an air filter(148) and the air outlet includes a flow meter (146) configured to provide flow information to the controller.

No. of Pages : 10 No. of Claims : 16

(12) PATENT APPLICATION PUBLICATION
(19) INDIA
(22) Date of filing of Application :18/12/2020
(21) Application No.202017055280 A
(43) Publication Date : 05/03/2021

(54) Title of the invention : REMOVABLE FLOOR SYSTEM WITH AUXILIARY FUEL TANKS FOR AN AIRCRAFT

(51) International classification	:B64C0001180000, B64D0037080000, B64D0037040000, B60K0015030000, B64D0037020000
(31) Priority Document No	:260172
(32) Priority Date	:20/06/2018
(33) Name of priority country	:Israel
(86) International Application No	:PCT/IL2019/050678
Filing Date	:18/06/2019
(87) International Publication No	:WO 2019/244150
(61) Patent of Addition to Application Number	:NA
Filing Date	:NA
(62) Divisional to Application Number	:NA
Filing Date	:NA

(71)**Name of Applicant :**
1)ISRAEL AEROSPACE INDUSTRIES LTD.
Address of Applicant :Ben-Gurion International Airport 7010000 Lod Israel
(72)**Name of Inventor :**
1)ZADAKA, Iftach
2)GUETTA, Yossi
3)PINHASI, Uri

(57) Abstract :
A floor system designed for use with an aircraft is provided. The aircraft comprises a cabin characterized by a first capacity defined by the number of personnel in a predetermined position which may be accommodated therein, and comprises an auxiliary fuel port. The floor system is configured to be detachably installed within the cabin and comprises one or more top panels constituting, when the floor system is installed in the aircraft, a floor of the cabin, and one or more fuel tanks disposed below the top panels and defining an internal space for containing liquid fuel there within. At least one of the fuel tanks is configured for connection to the auxiliary fuel port for supplying the fuel to the aircraft. The cabin with the floor system installed therein is characterized by a second capacity being equal to the first capacity.

No. of Pages : 15 No. of Claims : 29

(12) PATENT APPLICATION PUBLICATION
(21) Application No.202017055296 A
(19) INDIA
(22) Date of filing of Application :18/12/2020
(43) Publication Date : 05/03/2021

(54) Title of the invention : METHOD OF CONTROLLING A HAND-OPERATED PRINTER AND HAND OPERATED PRINTER

(51) International classification	:B41J0003360000, G07C0009000000, G07C0005080000, B29K0101120000, G01S0013931000	(71)**Name of Applicant :** **1)COLOP DIGITAL GMBH** Address of Applicant :Dr.-Arming-Strae 5 4600 Wels Austria (72)**Name of Inventor :** **1)BRETON, Alex**
(31) Priority Document No	:18179483.5	
(32) Priority Date	:25/06/2018	
(33) Name of priority country	:EPO	
(86) International Application No	:PCT/EP2019/066803	
Filing Date	:25/06/2019	
(87) International Publication No	:WO 2020/002317	
(61) Patent of Addition to Application Number	:NA	
Filing Date	:NA	
(62) Divisional to Application Number	:NA	
Filing Date	:NA	

(57) Abstract :
Method of controlling a hand-operated printer (3), comprising: detecting a transverse movement of the hand-operated printer (3) after finishing a first swath (1), comparing a transverse distance covered by the transverse movement with a predetermined transverse distance (11) between said first swath (1) and a second swath (2), and emitting a transverse-stop signal when the transverse distance covered by the transverse movement reaches the predetermined transverse distance (11).

No. of Pages : 14 No. of Claims : 15

(12) PATENT APPLICATION PUBLICATION
(19) INDIA
(22) Date of filing of Application :18/12/2020
(21) Application No.202017055300 A
(43) Publication Date : 05/03/2021

(54) Title of the invention : METHOD FOR PROVIDING RESTRICTED SERVICE AND COMMUNICATION DEVICE

(51) International classification	:H04L0029080000, H04L0012240000, H04M0001725000, H04W0004700000, H04W0072040000
(31) Priority Document No	:201810627352.8
(32) Priority Date	:13/06/2018
(33) Name of priority country	:China
(86) International Application No	:PCT/CN2019/091145
Filing Date	:13/06/2019
(87) International Publication No	:WO 2019/238097
(61) Patent of Addition to Application Number	:NA
Filing Date	:NA
(62) Divisional to Application Number	:NA
Filing Date	:NA

(71)**Name of Applicant :**
1)HUAWEI TECHNOLOGIES CO., LTD.
Address of Applicant :Huawei Administration Building Bantian, Longgang District Shenzhen, Guangdong 518129 China
(72)**Name of Inventor :**
1)SUN, Manli
2)HUANG, Zhenglei
3)YANG, Yanmei
4)SUN, Haiyang

(57) Abstract :
Disclosed are a method for providing a restricted service and a communication device, relating to the field of communications. When an IoT device is abnormal, the management efficiency of the IoT device can be improved while effectively reducing the security risk. The specific solution is: a PCF receiving an identifier of a terminal and indication information, wherein the indication information is used for indicating the abnormality of the terminal or an abnormal type of the terminal; and the PCF sending the identifier of the terminal and a first restricted service policy according to the indication information, wherein the first restricted service policy is used for providing the terminal with a restricted service.

No. of Pages : 67 No. of Claims : 33

(12) PATENT APPLICATION PUBLICATION
(19) INDIA
(22) Date of filing of Application :18/12/2020
(21) Application No.202017055309 A
(43) Publication Date : 05/03/2021

(54) Title of the invention : ELECTRONICS MODULE WITH PLUG CONNECTION

(51) International classification	:H05K0005000000, H05K0005060000, H01R0013627000, H01R0013520000, H01R0013740000
(31) Priority Document No	:10 2018 210 621.5
(32) Priority Date	:28/06/2018
(33) Name of priority country	:Germany
(86) International Application No	:PCT/EP2019/064518
Filing Date	:04/06/2019
(87) International Publication No	:WO 2020/001937
(61) Patent of Addition to Application Number	:NA
Filing Date	:NA
(62) Divisional to Application Number	:NA
Filing Date	:NA

(71)**Name of Applicant :**
1)ROBERT BOSCH GMBH
Address of Applicant :Postfach 30 02 20 70442 Stuttgart Germany
(72)**Name of Inventor :**
1)GUECKEL, Richard
2)KAMMER, Gerald

(57) Abstract :
The invention proceeds from an electronics module, comprising at least one populated circuit board having a plug connection for making electrical contact with a mating connector, wherein the plug connection comprises an electrically insulating connector body having at least one connector collar, through which an opening is formed for receiving the mating connection in the direction of a connector base. The connector body has a sealing region relative to the mating connector and within the opening is penetrated by a number of connector pins. The connector pins, which are then arranged on the side (connector side of the plug connection) facing the connector collar, can make electrical contact with the mating connector, while those on the side (connection side of the plug connection) facing away from the connector collar electrically contact the circuit board, for example by means of a soldered or press-in contact. The populated circuit board is enclosed, at least in regions, by at least one cured potting compound forming a protective enclosure. The connector collar and protective enclosure are formed in a single piece from the cured potting compound. The plug connection further has, within the opening, a pin carrier, which forms at least the region of the connector body penetrated by the connector pins and which is enclosed, at least partially, by the potting compound. The sealing region is formed outside the pin carrier on the connector collar.

No. of Pages : 16 No. of Claims : 14

(12) PATENT APPLICATION PUBLICATION
(21) Application No.202017055315 A
(19) INDIA
(22) Date of filing of Application :18/12/2020
(43) Publication Date : 05/03/2021

(54) Title of the invention : SOLAR POWER GENERATION SYSTEM

(51) International classification	:H02M0007480000, H04B0003540000, F24F0001200000, H02M0007483000, H02S0040360000	(71)**Name of Applicant :** **1)TOSHIBA MITSUBISHI-ELECTRIC INDUSTRIAL SYSTEMS CORPORATION** Address of Applicant :3-1-1, Kyobashi, Chuo-ku, Tokyo 1040031 Japan
(31) Priority Document No	:NA	(72)**Name of Inventor :**
(32) Priority Date	:NA	**1)TAKAHASHI, Nobuhiro**
(33) Name of priority country	:NA	
(86) International Application No	:PCT/JP2018/021902	
Filing Date	:07/06/2018	
(87) International Publication No	:WO 2019/234886	
(61) Patent of Addition to Application Number	:NA	
Filing Date	:NA	
(62) Divisional to Application Number	:NA	
Filing Date	:NA	

(57) Abstract :
A power conversion device 3 receives DC power via a power cable 12 laid from a collector box 10. The power conversion device 3 converts the received DC power to an AC power and transmits the AC power to a power system (not shown). A plurality of air lead-in tubes 20 are laid down in parallel with each other. The air lead-in tubes 20 are provided with a heat exchange portion, an opening portion, and a lead-in portion. The heat exchange portion is buried in the ground 60 on the rear side of a plurality of solar cell panels 4 on the ground surface. The opening portion is exposed to the ground surface. The lead-in portion is an opening in communication with the inside of a building 2 in which the power conversion device 3 is installed. The air lead-in tubes 20 are constructed so that air in the heat exchange portion is led in from the lead-in portion by using a taking-in means. As the taking-in means, a lead-in fan 22 is provided that circulates air inside the air lead-in tubes 20.

No. of Pages : 10 No. of Claims : 3

(12) PATENT APPLICATION PUBLICATION
(19) INDIA
(22) Date of filing of Application :18/12/2020
(21) Application No.202017055316 A
(43) Publication Date : 05/03/2021

(54) Title of the invention : POWER CONVERSION SYSTEM

(51) International classification	:H02M0003157000, H02M0001000000, H02M0001120000, H02M0007797000, H02M0005297000
(31) Priority Document No	:NA
(32) Priority Date	:NA
(33) Name of priority country	:NA
(86) International Application No	:PCT/JP2019/021378
Filing Date	:29/05/2019
(87) International Publication No	:WO 2020/240742
(61) Patent of Addition to Application Number	:NA
Filing Date	:NA
(62) Divisional to Application Number	:NA
Filing Date	:NA

(71)**Name of Applicant :**
1)TOSHIBA MITSUBISHI-ELECTRIC INDUSTRIAL SYSTEMS CORPORATION
Address of Applicant :3-1-1, Kyobashi, Chuo-ku, Tokyo 1040031 Japan
(72)**Name of Inventor :**
1)TSURUMA, Yoshinori

(57) Abstract :
This power conversion system is provided with a power conversion circuit, a power conversion control circuit equipped with a charging control mode, and a command value generation unit. The charging control mode is a mode for controlling the output voltage of the power conversion circuit so that an interconnection inductance voltage is applied to an interconnection inductance, said interconnection inductance voltage being determined by a power supply voltage vector of an AC power supply and a voltage command value vector having a phase delayed from the power supply voltage vector and having a magnitude and the phase which are based on a command value. The command value generation unit generates a first command value for the operation of the charging control mode of when the voltage of a storage battery does not become less than an overdischarge threshold value. The command value generation unit generates a second command value for the operation of the charging control mode of when the voltage of the storage battery has become less than the overdischarge threshold value. The first command value causes the power conversion circuit to output an output voltage in accordance with a first voltage command value vector having a first magnitude and a first delay phase. The second command value causes the power conversion circuit to output an output voltage in accordance with a second voltage command value vector having a second magnitude less than the first magnitude.

No. of Pages : 27 No. of Claims : 11

(12) PATENT APPLICATION PUBLICATION
(21) Application No.202017055320 A
(19) INDIA
(22) Date of filing of Application :18/12/2020
(43) Publication Date : 05/03/2021

(54) Title of the invention : METAL-IODIDE CATALYTIC SYSTEM FOR DIRECT ETHERIFICATION FROM ALDEHYDES AND/OR KETONES

(51) International classification	:C07C0041060000, C07C0029145000, C10L0001020000, C07C0049840000, C07C0041090000
(31) Priority Document No	:NA
(32) Priority Date	:NA
(33) Name of priority country	:NA
(86) International Application No	:PCT/CN2018/092796
Filing Date	:26/06/2018
(87) International Publication No	:WO 2020/000170
(61) Patent of Addition to Application Number	:NA
Filing Date	:NA
(62) Divisional to Application Number	:NA
Filing Date	:NA

(71)**Name of Applicant :**
1)RHODIA OPERATIONS
Address of Applicant :52 rue de la Haie Coq 93300 Aubervilliers France
2)LE CENTRE NATIONAL DE LA RECHERCHE SCIENTIFIQUE
3)UNIVERSITE DE LILLE
4)CENTRALE LILLE INSTITUT
(72)**Name of Inventor :**
1)WU, Dan
2)ORDOMSKY, Vitaly
3)HERNANDEZ ENCISO, Willinton Yesid
4)STREIFF, Stphane

(57) Abstract :
A process for etherification of aldehydes and/or ketones in the presence of a catalyst and an iodine source.

No. of Pages : 19 No. of Claims : 15

(12) PATENT APPLICATION PUBLICATION
(19) INDIA
(22) Date of filing of Application :18/12/2020
(21) Application No.202017055321 A
(43) Publication Date : 05/03/2021

(54) Title of the invention : VARIABLE CONTROL ORIFICE VALVE

(51) International classification	:F16K0041100000, F16K0027080000, F16K0041120000, F16K0001360000, F16K0027020000
(31) Priority Document No	:62/674695
(32) Priority Date	:22/05/2018
(33) Name of priority country	:U.S.A.
(86) International Application No	:PCT/IB2019/000698
Filing Date	:22/05/2019
(87) International Publication No	:WO 2019/224605
(61) Patent of Addition to Application Number	:NA
Filing Date	:NA
(62) Divisional to Application Number	:NA
Filing Date	:NA

(71)**Name of Applicant :**
1)COMPART SYSTEMS PTE. LTD.
Address of Applicant :7 Temasek Boulevard #32-01 Suntec City Tower One Singapore 038987 Singapore
(72)**Name of Inventor :**
1)REZAEI, Frederick

(57) Abstract :
An apparatus for controlling flow through a flow body (100) comprising an intake opening (102) and an output opening (108) in the flow body, a cavity with a first cross-sectional shape and an opening, a diaphragm (114) or a bellows, wherein the diaphragm or the bellows seals the opening of the cavity and the diaphragm or the bellows includes a hole, a plunger (106A) with the cross- sectional shape corresponding to the cavity, wherein the plunger is longitudinally movable within the cavity and a plunger portion (106B) forms an orifice with cavity portion, and a rod (104A) coupled with the plunger for facilitating the longitudinal movement of the plunger, wherein the rod comprises a rod cross section that corresponds to the hole in the diaphragm or the bellows.

No. of Pages : 16 No. of Claims : 23

(12) PATENT APPLICATION PUBLICATION
(19) INDIA
(22) Date of filing of Application :19/12/2020
(21) Application No.202017055341 A
(43) Publication Date : 05/03/2021

(54) Title of the invention : COLOR STABILIZATION OF MONOMERS AND OTHER REACTANTS FOR FORMING BIO-BASED POLYMERS

(51) International classification	:C08G0063181000, C07D0307680000, C12N0015100000, A61K0047600000, B01D0071820000
(31) Priority Document No	:62/686415
(32) Priority Date	:18/06/2018
(33) Name of priority country	:U.S.A.
(86) International Application No	:PCT/US2019/037646
Filing Date	:18/06/2019
(87) International Publication No	:WO 2019/246034
(61) Patent of Addition to Application Number	:NA
Filing Date	:NA
(62) Divisional to Application Number	:NA
Filing Date	:NA

(71)**Name of Applicant :**
1)ARCHER DANIELS MIDLAND COMPANY
Address of Applicant :4666 Faries Parkway Decatur, Illinois 62526 U.S.A.
2)DUPONT INDUSTRIAL BIOSCIENCES USA, LLC
(72)**Name of Inventor :**
1)HAGBERG, Erik
2)MA, Chi Cheng
3)STENSRUD, Kenneth F.

(57) Abstract :
Compositions and methods are disclosed for the production of bio-based polymers (e.g., polymers made from glucose), including polyesters, as well as end products resulting from such production, in which one or more color stabilizing additive compounds is utilized. The additive(s) may be used in the stabilization of a monomer or prepolymer that is reacted in such production methods, prior to obtaining the polymer. Particular bio-based polymers are those having furandicarboxylate moieties or residues in their backbone structure, with poly(alkylene furan dicarboxylate) polymers, such as poly(ethylene furan dicarboxylate) (PEF) and poly(trimethylene furan dicarboxylate) (PTF) being representative.

No. of Pages : 22 No. of Claims : 14

(12) PATENT APPLICATION PUBLICATION
(19) INDIA
(22) Date of filing of Application :19/12/2020
(21) Application No.202017055365 A
(43) Publication Date : 05/03/2021

(54) Title of the invention : DEVICE FOR FORMING A MEDICAL PASTE

(51) International classification	:A61J0001200000, A61M0005178000, A61M0039000000, A61M0005190000, A61M0005240000
(31) Priority Document No	:18180033.5
(32) Priority Date	:27/06/2018
(33) Name of priority country	:EPO
(86) International Application No	:PCT/EP2019/067018
Filing Date	:26/06/2019
(87) International Publication No	:WO 2020/002438
(61) Patent of Addition to Application Number	:NA
Filing Date	:NA
(62) Divisional to Application Number	:NA
Filing Date	:NA

(71)**Name of Applicant :**
1)FERROSAN MEDICAL DEVICES A/S
Address of Applicant :Sydmarken 5 2860 S¸borg Denmark
(72)**Name of Inventor :**
1)LARSEN, Kristian
2)HAMMERSH˜J, Peter, Lund

(57) Abstract :
The invention regards a device for reconstituting a bioactive agent and forming a flowable paste, the device comprising: - a base configured for receiving: - a first container containing a liquid, and - a second container containing the bioactive agent, - a syringe containing a paste forming material, the syringe being attachable to the base, wherein the base has a first conduit for fluidly connecting the first container with the second container and a second conduit for fluidly connecting the second container with the syringe, and wherein the first container is configured to be pressurizable such that when the first and second containers are received at the base, the liquid is forced through the first conduit into the second container, thereby reconstituting the bioactive agent, and the reconstituted bioactive agent is forced through the second conduit into the syringe, such that a paste is formed.

No. of Pages : 28 No. of Claims : 15

(12) PATENT APPLICATION PUBLICATION
(19) INDIA
(22) Date of filing of Application :19/12/2020
(21) Application No.202017055367 A
(43) Publication Date : 05/03/2021

(54) Title of the invention : DEVICE FOR MIXING A MEDICAL PASTE

(51) International classification	:A61J0001200000, A61M0005190000, A61M0005178000, A61M0039000000, A61F0002460000
(31) Priority Document No	:18180036.8
(32) Priority Date	:27/06/2018
(33) Name of priority country	:EPO
(86) International Application No	:PCT/EP2019/067028
Filing Date	:26/06/2019
(87) International Publication No	:WO 2020/002443
(61) Patent of Addition to Application Number	:NA
Filing Date	:NA
(62) Divisional to Application Number	:NA
Filing Date	:NA

(71)**Name of Applicant :**
1)FERROSAN MEDICAL DEVICES A/S
Address of Applicant :Sydmarken 5 2860 S¸borg Denmark
(72)**Name of Inventor :**
1)LARSEN, Kristian
2)HAMMERSH˜J, Peter, Lund

(57) Abstract :
The invention regards a device for reconstituting a bioactive agent and forming a paste, the device comprising: - a container (2) containing the bioactive agent, - a first syringe (4) containing a liquid, - a second syringe (5) containing a paste forming material, - a connector element (6) configured for establishing sequential fluid connections between 1) the first syringe and the container, 2) the container and the second syringe, and 3) the first and second syringes, such that the liquid can be transferred from the first syringe to the container to reconstitute the bioactive agent, whereupon the reconstituted bioactive agent can be transferred from the container into the second syringe to form a paste, and the paste can be transferred to the first syringe.

No. of Pages : 31 No. of Claims : 13

(12) PATENT APPLICATION PUBLICATION
(21) Application No.202017055376 A
(19) INDIA
(22) Date of filing of Application :19/12/2020
(43) Publication Date : 05/03/2021

(54) Title of the invention : LIQUID COMPOSITION COMPRISING THREE INITIATORS, ITS PROCESS OF POLYMERIZATION, USE AND MATERIAL OR COMPOSITION OBTAINED FOLLOWING POLYMERIZATION OF COMPOSITION

(51) International classification	:C08J0005040000, C08F0265060000, C08J0005240000, C08F0004380000, C08F0020180000
(31) Priority Document No	:FR 18 55539
(32) Priority Date	:21/06/2018
(33) Name of priority country	:France
(86) International Application No	:PCT/EP2019/066293
Filing Date	:19/06/2019
(87) International Publication No	:WO 2019/243469
(61) Patent of Addition to Application Number	:NA
Filing Date	:NA
(62) Divisional to Application Number	:NA
Filing Date	:NA

(71)**Name of Applicant :**
1)ARKEMA FRANCE
Address of Applicant :420 rue d'Estienne d'Orves 92700 COLOMBES France
(72)**Name of Inventor :**
1)GERARD, Pierre
2)ZOLLER, Alexander
3)ESCALE, Pierre

(57) Abstract :
The present invention relates to a liquid composition comprising a monomer, a (meth)acrylic polymer and at least three initiators. In particular the present invention relates to a liquid composition comprising a monomer, a (meth)acrylic polymer and at least three initiators that have a different half life time. That liquid composition can be used as a syrup and especially as a syrup for impregnation of fibres or fibrous material. Also concerned is a thermoplastic material obtained after polymerization of the liquid composition. The invention also relates to a process for manufacturing such a liquid composition. The invention also relates to a process for impregnating a fibrous substrate of long fibres with said liquid composition. The invention also relates to a fibrous substrate impregnated with said liquid composition which is useful for manufacturing composite parts. The present invention also relates to a process for manufacturing mechanical parts or structural elements made of composite material and to mechanical parts or structural elements made of composite material obtained via a process using such a liquid composition.

No. of Pages : 31 No. of Claims : 58

(12) PATENT APPLICATION PUBLICATION
(19) INDIA
(22) Date of filing of Application :19/12/2020
(21) Application No.202017055379 A
(43) Publication Date : 05/03/2021

(54) Title of the invention : LIQUIDS

(51) International classification	:C11D0003390000, C08G0063480000, C08F0283010000, A61K0008810000, C02F0101200000
(31) Priority Document No	:18181926.9
(32) Priority Date	:05/07/2018
(33) Name of priority country	:EPO
(86) International Application No	:PCT/GB2019/051899
Filing Date	:04/07/2019
(87) International Publication No	:WO 2020/008203
(61) Patent of Addition to Application Number	:NA
Filing Date	:NA
(62) Divisional to Application Number	:NA
Filing Date	:NA

(71)**Name of Applicant :**
1)BORCHERS CATALYST (UK) LIMITED
Address of Applicant :Beech Hill Plant Gidlow Lane Wigan WN6 8RN U.K.
(72)**Name of Inventor :**
1)DE BOER, Johannes Wietse
2)MAAIJEN, Karin
3)ROELOFSEN, Yfranka Petronella Areke
4)HAGE, Ronald

(57) Abstract :
The present invention concerns the curing and hardening of liquids comprising unsaturated resins, a peroxide and a chelant capable of chelating at least one transition metal ion through three, four, or five nitrogen atoms, which chelants may each optionally be complexed with one or two transition metal ions, typically iron or manganese ions. The invention also provides methods and formulations for making associated compositions, compositions resultant from the curing of such liquids and associated kits comprising two or more compositions physically separated from one another, which may be used to provide curable liquids when mixed..

No. of Pages : 82 No. of Claims : 15

(12) PATENT APPLICATION PUBLICATION
(19) INDIA
(22) Date of filing of Application :19/12/2020

(21) Application No.202017055385 A
(43) Publication Date : 05/03/2021

(54) Title of the invention : BIMODAL POLYETHYLENE COPOLYMER AND FILM THEREOF

(51) International classification	:C08F0210160000, C08J0005180000, B29C0048000000, C08L0023080000, C08L0023100000
(31) Priority Document No	:62/684340
(32) Priority Date	:13/06/2018
(33) Name of priority country	:U.S.A.
(86) International Application No	:PCT/US2019/035921
Filing Date	:07/06/2019
(87) International Publication No	:WO 2019/241045
(61) Patent of Addition to Application Number	:NA
Filing Date	:NA
(62) Divisional to Application Number	:NA
Filing Date	:NA

(71)**Name of Applicant :**
1)UNIVATION TECHNOLOGIES, LLC
Address of Applicant :5555 San Felipe, Suite 1950 Houston, TX 77056 U.S.A.
(72)**Name of Inventor :**
1)LIU, Bo
2)WIELICZKO, Joel D.
3)SZUL, John F.
4)ABE, Daudi A.
5)KUHLMAN, Roger L.
6)BAFNA, Ayush A.
7)LYNN, Timothy R.

(57) Abstract :
A bimodal ethylene-co-1-hexene copolymer consisting essentially of a higher molecular weight component and a lower molecular weight component and, when in melted form at 190 degrees Celsius, is characterized by a unique melt property space defined by a combination of high-load melt index, melt flow ratio, and melt elasticity properties. A blown film consisting essentially of the bimodal ethylene-co-1-hexene copolymer. A method of synthesizing the bimodal ethylene-co-1-hexene copolymer. A method of making the blown film. A manufactured article comprising the bimodal ethylene-co-1-hexene copolymer.

No. of Pages : 30 No. of Claims : 10

(12) PATENT APPLICATION PUBLICATION
(21) Application No.202017055386 A
(19) INDIA
(22) Date of filing of Application :19/12/2020
(43) Publication Date : 05/03/2021

(54) Title of the invention : BORATE AND SILICATE COATING FOR IMPROVED ACOUSTICAL PANEL PERFORMANCE AND METHODS OF MAKING SAME

(51) International classification	:C04B0111000000, C09D0001020000, E04B0009040000, C04B0028260000, E04B0009000000	(71)**Name of Applicant :** **1)USG INTERIORS, LLC** Address of Applicant :550 West Adams Street Chicago, IL 60661-3676 U.S.A. (72)**Name of Inventor :** **1)LI, Qinghua** **2)ALDABAIBEH, Naser**
(31) Priority Document No	:16/009053	
(32) Priority Date	:14/06/2018	
(33) Name of priority country	:U.S.A.	
(86) International Application No	:PCT/US2019/036757	
Filing Date	:12/06/2019	
(87) International Publication No	:WO 2019/241379	
(61) Patent of Addition to Application Number	:NA	
Filing Date	:NA	
(62) Divisional to Application Number	:NA	
Filing Date	:NA	

(57) Abstract :
The disclosure provides a coating composition for improving the sag resistance of a fibrous panel, the composition including 10 to 100 wt.% inorganic binder, based on the total weight of the dry coating, wherein the inorganic binder includes a borate salt and at least one of an alkali metal silicate or an alkaline earth metal silicate, and the inorganic binder is water soluble. Further provided are fibrous panels having a backing side and an opposing facing side including the coating of the disclosure, and methods of preparing same.

No. of Pages : 25 No. of Claims : 10

(12) PATENT APPLICATION PUBLICATION
(19) INDIA
(22) Date of filing of Application :19/12/2020
(21) Application No.202017055390 A
(43) Publication Date : 05/03/2021

(54) Title of the invention : SAFETY HANDLE FOR THE CONTROL OF ACCESS FOR MACHINES OR INDUSTRIAL PLANTS

(51) International classification	:F16P0003080000, H01H0027000000, G06F0021790000, G06F0021360000, F16P0003120000
(31) Priority Document No	:102018000005913
(32) Priority Date	:31/05/2018
(33) Name of priority country	:Italy
(86) International Application No	:PCT/IB2019/054516
Filing Date	:31/05/2019
(87) International Publication No	:WO 2019/229708
(61) Patent of Addition to Application Number	:NA
Filing Date	:NA
(62) Divisional to Application Number	:NA
Filing Date	:NA

(71)**Name of Applicant :**
1)PIZZATO ELETTRICA S.R.L.
Address of Applicant :Via Torino, 1 36063 Marostica (VI) Italy
(72)**Name of Inventor :**
1)PIZZATO, Marco
2)ZONTA, Simone

(57) Abstract :
A safety handle for the control of access for machines or industrial plants comprises a main body (3, 4) adapted to be anchored to the movable part (M) of the access (A) to be controlled and adapted to be gripped by a user for moving the movable part (M) of the access (A), fixing means for fixing the main body (3, 4) to the movable part (M) of the access (A), an actuator (2) to be associated with the main body (3, 4) and adapted to interact with control means associated with the fixed part (F) of the access (A) upon closure thereof for enabling the machine or industrial plant to be controlled, sealing means (11) suitable for covering the fixing means to prevent access from the outside.

No. of Pages : 13 No. of Claims : 14

(12) PATENT APPLICATION PUBLICATION
(19) INDIA
(22) Date of filing of Application :19/12/2020

(21) Application No.202017055391 A
(43) Publication Date : 05/03/2021

(54) Title of the invention : OXIDATIVELY CURABLE COATING COMPOSITION

(51) International classification	:C09D0167080000, C09D0167020000, C08K0005000000, C09F0009000000, C08L0067080000
(31) Priority Document No	:18181879.0
(32) Priority Date	:05/07/2018
(33) Name of priority country	:EPO
(86) International Application No	:PCT/GB2019/051900
Filing Date	:04/07/2019
(87) International Publication No	:WO 2020/008204
(61) Patent of Addition to Application Number	:NA
Filing Date	:NA
(62) Divisional to Application Number	:NA
Filing Date	:NA

(71)**Name of Applicant :**
1)BORCHERS CATALYST (UK) LIMITED
Address of Applicant :Beech Hill Plant Gidlow Lane Wigan WN68RN U.K.
(72)**Name of Inventor :**
1)DE BOER, Johannes Wietse
2)HAGE, Ronald
3)MAAIJEN, Karin
4)ROELOFSEN, Yfranka Petronella Areke

(57) Abstract :
The present invention relates to an oxidatively curable coating formulation comprising an oxidatively curable alkyd-based resin and unsymmetrically substituted 1,4,7- triazacyclononane-based chelant, which chelant may optionally be complexed with a suitable transition metal ion, particularly manganese. The formulations may be paints or other oxidatively curable coating compositions. The invention also provides methods for making such formulations and compositions resultant from the curing of such formulations.

No. of Pages : 42 No. of Claims : 15

(12) PATENT APPLICATION PUBLICATION
(19) INDIA
(22) Date of filing of Application :19/12/2020
(21) Application No.202017055392 A
(43) Publication Date : 05/03/2021

(54) Title of the invention : HIGH-PURITY STEVIOL GLYCOSIDES

(51) International classification	:A23L0027300000, C07H0015256000, C12P0019560000, A23L0002600000, C12N0015810000
(31) Priority Document No	:62/682461
(32) Priority Date	:08/06/2018
(33) Name of priority country	:U.S.A.
(86) International Application No	:PCT/US2019/036125
Filing Date	:07/06/2019
(87) International Publication No	:WO 2019/237044
(61) Patent of Addition to Application Number	:NA
Filing Date	:NA
(62) Divisional to Application Number	:NA
Filing Date	:NA

(71)**Name of Applicant :**
1)PURECIRCLE USA INC.
Address of Applicant :200 West Jackson Boulevard Suite 800 Chicago, IL 60606 U.S.A.
(72)**Name of Inventor :**
1)MARKOSYAN, Avetik
2)RAMANDACH, Saravanan, A/L
3)AFZAAL BIN HASIM, Mohamad
4)CHKHAN, Kristina
5)NIZAM BIN NAWI, Khairul
6)CHOW, Siew, Yin

(57) Abstract :
Methods of preparing highly purified steviol glycosides, particularly steviolmonoside, steviolmonoside A, steviolbioside A, steviolbioside B, steviolbioside C, steviolbioside D, steviolbioside E, rubusoside, dulcoside A, dulcoside C, dulcoside D, stevioside A, stevioside B, stevioside C, stevioside G, stevioside H rebaudioside B2, rebaudioside A4, rebaudioside C, rebaudioside C3, rebaudioside C4, rebaudioside C5, rebaudioside C6, rebaudioside E3, rebaudioside E4, rebaudioside E5, rebaudioside E6, rebaudioside E7, rebaudioside D5, rebaudioside D6, rebaudioside D7, rebaudioside D8, rebaudioside H2, rebaudioside H3, rebaudioside H4, rebaudioside H5, rebaudioside H6, rebaudioside K, rebaudioside N2, rebaudioside N3, rebaudioside N4, rebaudioside N5, rebaudioside M3 and/or rebaudioside 04 are described. The methods include utilizing enzyme preparations and recombinant microorganisms for converting various staring compositions to target steviol glycosides. The highly purified steviol glycosides are useful as non-caloric sweetener, flavor enhancer, sweetness enhancer, and foaming suppressor in edible and chewable compositions such as any beverages, confectioneries, bakery products, cookies, and chewing gums.

No. of Pages : 109 No. of Claims : 26

(12) PATENT APPLICATION PUBLICATION
(21) Application No.202017055394 A
(19) INDIA
(22) Date of filing of Application :19/12/2020
(43) Publication Date : 05/03/2021

(54) Title of the invention : CONTEXT-AWARE USER INTERFACE (UI) FOR MULTI-FORM FACTOR INFORMATION HANDLING SYSTEMS (IHSS)

(51) International classification	:G06F0003048700, G06F0003048000, G06F0001160000, G06F0009451000, G06F0003140000
(31) Priority Document No	:16/107748
(32) Priority Date	:21/08/2018
(33) Name of priority country	:U.S.A.
(86) International Application No	:PCT/US2019/038137
Filing Date	:20/06/2019
(87) International Publication No	:WO 2020/040856
(61) Patent of Addition to Application Number	:NA
Filing Date	:NA
(62) Divisional to Application Number	:NA
Filing Date	:NA

(71)**Name of Applicant :**
1)DELL PRODUCTS, L.P.
Address of Applicant :One Dell Way Round Rock, Texas 78682 U.S.A.
(72)**Name of Inventor :**
1)IYER, Vivek Viswanathan
2)KNOPPERT, Michiel Sebastiaan Emanuel Petrus
3)LIGAMERI, Mark R.

(57) Abstract :
Embodiments of a context-aware User Interface (UI) for multi-form factor Information Handling Systems (IHSs) are described. In an illustrative, non-limiting embodiment, an IHS may include a processor and a memory coupled to the processor, the memory having program instructions stored thereon that, upon execution by the processor, cause the IHS to: identify an arrangement of a second display relative to a first display; identify a position of a keyboard relative to the second display; and modify a Graphical User Interface (GUI) provided by the second display in response to: (i) the arrangement; and (ii) the position.

No. of Pages : 26 No. of Claims : 20

(12) PATENT APPLICATION PUBLICATION
(19) INDIA
(22) Date of filing of Application :19/12/2020

(21) Application No.202017055395 A
(43) Publication Date : 05/03/2021

(54) Title of the invention : MULTI-FORM FACTOR INFORMATION HANDLING SYSTEM (IHS) WITH REMOVABLE KEYBOARD

(51) International classification	:G06F0001160000, G06F0003023000, G06F0003035400, G06F0003048700, G06F0003010000
(31) Priority Document No	:16/050392
(32) Priority Date	:31/07/2018
(33) Name of priority country	:U.S.A.
(86) International Application No	:PCT/US2019/038174
Filing Date	:20/06/2019
(87) International Publication No	:WO 2020/027933
(61) Patent of Addition to Application Number	:NA
Filing Date	:NA
(62) Divisional to Application Number	:NA
Filing Date	:NA

(71)**Name of Applicant :**
1)DELL PRODUCTS, L.P.
Address of Applicant :One Dell Way Round Rock, Texas 78682 U.S.A.
(72)**Name of Inventor :**
1)QUINN, Liam B.
2)ROBINETTE, Christopher Alan
3)KNOPPPERT, Michiel Sebastiaan Emanuel Petrus

(57) Abstract :
Embodiments of a multi-form factor Information Handling System (IHS) with a removable keyboard are described. In an illustrative, non-limiting embodiment, an IHS may include a processor and a memory coupled to the processor, the memory having program instructions stored thereon that, upon execution by the processor, cause the IHS to: identify a physical arrangement of: (i) a first display, (ii) a second display coupled to the first display, and (iii) a keyboard; and execute an operation associated with the physical arrangement.

No. of Pages : 19 No. of Claims : 17

(12) PATENT APPLICATION PUBLICATION
(19) INDIA
(22) Date of filing of Application :19/12/2020
(21) Application No.202017055396 A
(43) Publication Date : 05/03/2021

(54) Title of the invention : HANDLING FILE COMMIT AND COMMIT-DELETE OPERATIONS IN AN OVERLAY OPTIMIZER

(51) International classification	:G06F0016230000, G06F0016160000, G06F0016170000, G06F0016172000, H03H0009020000
(31) Priority Document No	:16/057694
(32) Priority Date	:07/08/2018
(33) Name of priority country	:U.S.A.
(86) International Application No	:PCT/US2019/042141
Filing Date	:17/07/2019
(87) International Publication No	:WO 2020/033112
(61) Patent of Addition to Application Number	:NA
Filing Date	:NA
(62) Divisional to Application Number	:NA
Filing Date	:NA

(71)**Name of Applicant :**
1)DELL PRODUCTS L.P.
Address of Applicant :One Dell Way Round Rock, Texas 78682 U.S.A.
(72)**Name of Inventor :**
1)VAJRAVEL, Gokul
2)KUMAR, Ankit

(57) Abstract :
File commit and commit-delete operations can be successfully completed in environments that employ an overlay optimizer to enhance the performance of a write filter. The overlay optimizer can be structured into upper and lower instances relative to the write filter. The upper instance can cause files to be moved from the write filter's overlay into an overlay cache to thereby optimize the performance of the overlay. To prevent the failure of commit and commit-delete operations that target files that have been moved to the overlay cache, the lower instance can be configured to detect when the write filter is attempting to perform a commit or commit-delete operation and can modify the processing of such operations to cause them to be completed successfully even though the files targeted by the operations do not exist in the write filter's overlay.

No. of Pages : 13 No. of Claims : 20

(12) PATENT APPLICATION PUBLICATION
(19) INDIA
(22) Date of filing of Application :19/12/2020
(21) Application No.202017055397 A
(43) Publication Date : 05/03/2021

(54) Title of the invention : HEAD-MOUNTED DEVICES (HMDS) DISCOVERY IN CO-LOCATED VIRTUAL, AUGMENTED, AND MIXED REALITY (XR) APPLICATIONS

(51) International classification	:G02B0027010000, G06F0003010000, G06T0019000000, H04L0029060000, G02B0027000000
(31) Priority Document No	:16/105128
(32) Priority Date	:20/08/2018
(33) Name of priority country	:U.S.A.
(86) International Application No	:PCT/US2019/046460
Filing Date	:14/08/2019
(87) International Publication No	:WO 2020/041059
(61) Patent of Addition to Application Number	:NA
Filing Date	:NA
(62) Divisional to Application Number	:NA
Filing Date	:NA

(71)**Name of Applicant :**
1)DELL PRODUCTS, L.P.
Address of Applicant :One Dell Way Round Rock, Texas 78682 U.S.A.
(72)**Name of Inventor :**
1)IYER, Vivek Viswanathan
2)BOYAPALLE, Anantha K.
3)SEIBERT, Philip M.
4)KRISHNAKUMAR, Karthikeyan

(57) Abstract :
Methods and systems are provided for collaborating in the discovery of Head-Mounted Devices (HMDs) configured for hosting a co-located virtual, augmented, or mixed reality (xR) session. An HMD issues a request to join a co-located xR session. Participating in a co-located xR session requires a joining HMD to obtain authorization from a host HMD. A joining HMD may be located such that direct communications between the joining HMD and the host HMD are either unreliable, or beyond the capabilities of two HMDs. The joining HMD may collaborate with neighboring HMDs to obtain authorization from a host HMD. The host HMD aggregates information from joining HMDs to determine the authorized HMDs and to determine the most reliable forms of direct communication between each pair of HMDs participating in the xR session.

No. of Pages : 28 No. of Claims : 20

(12) PATENT APPLICATION PUBLICATION
(19) INDIA
(22) Date of filing of Application :19/12/2020

(21) Application No.202017055398 A
(43) Publication Date : 05/03/2021

(54) Title of the invention : MULTI-FORM FACTOR INFORMATION HANDLING SYSTEM (IHS) WITH ATTACHABLE KEYBOARD

(51) International classification	:G06F0001160000, G06F0003140000, G06F0003023000, G06F0003048700, G06F0003038000
(31) Priority Document No	:16/050605
(32) Priority Date	:31/07/2018
(33) Name of priority country	:U.S.A.
(86) International Application No	:PCT/US2019/038198
Filing Date	:20/06/2019
(87) International Publication No	:WO 2020/027934
(61) Patent of Addition to Application Number	:NA
Filing Date	:NA
(62) Divisional to Application Number	:NA
Filing Date	:NA

(71)**Name of Applicant :**
1)DELL PRODUCTS, L.P.
Address of Applicant :One Dell Way Round Rock, Texas 78682 U.S.A.
(72)**Name of Inventor :**
1)QUINN, Liam B.
2)ROBINETTE, Christopher Alan
3)KNOPPERT, Michiel Sebastiaan Emanuel Petrus

(57) Abstract :
Embodiments of a multi-form factor Information Handling System (IHS) with an attachable keyboard are described. In some embodiments, an IHS may include a first display and a second display coupled to the first display, where the second display comprises one or more magnetic devices that provide a magnetic force configured to hold a bottom portion of a keyboard against a display surface of the second display.

No. of Pages : 25 No. of Claims : 17

(12) PATENT APPLICATION PUBLICATION
(19) INDIA
(22) Date of filing of Application :21/12/2020
(21) Application No.202017055453 A
(43) Publication Date : 05/03/2021

(54) Title of the invention : ELECTRODEPOSITABLE COATING COMPOSITION

(51) International classification	:C09D0163000000, C09D0005440000, C08G0071040000, C08G0018240000, C08G0018380000
(31) Priority Document No	:16/019590
(32) Priority Date	:27/06/2018
(33) Name of priority country	:U.S.A.
(86) International Application No	:PCT/US2019/039437
Filing Date	:27/06/2019
(87) International Publication No	:WO 2020/006188
(61) Patent of Addition to Application Number	:NA
Filing Date	:NA
(62) Divisional to Application Number	:NA
Filing Date	:NA

(71)**Name of Applicant :**
1)PRC-DESOTO INTERNATIONAL, INC.
Address of Applicant :12780 San Fernando Road Sylmar, California 91342 U.S.A.
(72)**Name of Inventor :**
1)DACKO, Christopher A.
2)MAYO, Michael A.
3)MCCOLLUM, Gregory J.
4)PEFFER, Robin M.
5)LEE, Se Ryeon

(57) Abstract :
The present invention is directed to a phosphated epoxy resin comprising at least one terminal group comprising a phosphorous atom covalently bonded to the resin by a carbon-phosphorous bond or by a phosphoester linkage; and at least one carbamate functional group. The present invention is also directed towards aqueous resinous dispersions comprising the phosphated epoxy resin, methods of coating a substrate, coated substrates, and methods of making a phosphated epoxy resin.

No. of Pages : 57 No. of Claims : 35

(12) PATENT APPLICATION PUBLICATION
(19) INDIA
(22) Date of filing of Application :21/12/2020
(21) Application No.202017055488 A
(43) Publication Date : 05/03/2021

(54) Title of the invention : METHOD FOR MANUFACTURING DIARYLMETHANE COMPOUND

(51) International classification	:C12P0019040000, C07F0007040000, C01G0023000000, C07F0007180000, C07D0333120000
(31) Priority Document No	:2018-104250
(32) Priority Date	:31/05/2018
(33) Name of priority country	:Japan
(86) International Application No	:PCT/JP2019/021460
Filing Date	:30/05/2019
(87) International Publication No	:WO 2019/230864
(61) Patent of Addition to Application Number	:NA
Filing Date	:NA
(62) Divisional to Application Number	:NA
Filing Date	:NA

(71)**Name of Applicant :**
1)TOKUYAMA CORPORATION
Address of Applicant :1-1, Mikage-cho, Shunan-shi, Yamaguchi 7458648 Japan
(72)**Name of Inventor :**
1)SEKI Masahiko

(57) Abstract :
The purpose of the present invention is to provide a method for manufacturing, inexpensively, efficiently, and on an industrial scale, a compound useful as an intermediate for synthesizing a pharmaceutical ingredient for an anti-diabetic drug or the like, and in order to achieve this purpose, the present invention comprises reducing a compound (2) represented by formula (2) [in which R1, Ar, n, and X are as described in the specification] using a reducing agent in the presence of a titanium compound, and manufacturing a compound (1) represented by formula (1) [in which R1, Ar, and N are as described in the specification].

No. of Pages : 56 No. of Claims : 5

(12) PATENT APPLICATION PUBLICATION
(21) Application No.202017055489 A
(19) INDIA
(22) Date of filing of Application :21/12/2020
(43) Publication Date : 05/03/2021

(54) Title of the invention : DISPENSING CONTROL SYSTEM, METHOD OF CONTROLLING A DISPENSING DEVICE AND COMPUTER PROGRAM BACKGROUND

(51) International classification	:A61C0005640000, A61C0009000000, G01F0011020000, E03C0001050000, G16H0040670000	(71)**Name of Applicant :** **1)SULZER MIXPAC AG** Address of Applicant :R¼tistrasse 7 9469 Haag (Rheintal) Switzerland
(31) Priority Document No	:16/023827	(72)**Name of Inventor :** **1)TURNER, Hayden** **2)CLEMENS, Victor**
(32) Priority Date	:29/06/2018	
(33) Name of priority country	:U.S.A.	
(86) International Application No	:PCT/EP2019/067321	
Filing Date	:28/06/2019	
(87) International Publication No	:WO 2020/002596	
(61) Patent of Addition to Application Number	:NA	
Filing Date	:NA	
(62) Divisional to Application Number	:NA	
Filing Date	:NA	

(57) Abstract :
A dispensing control system includes a dispensing device and a remote device. The dispensing device includes a dispenser configured to dispense material from a cartridge disposed in the dispensing device, a first receiver configured to receive information related to the cartridge, a transmitter configured to transmit the information related to the cartridge, and an electronic controller configured to cause the transmitter of the dispensing device to transmit the information related to the cartridge. The remote device includes an electronic controller, a receiver and a transmitter, the receiver of the remote device is configured to receive the information related to the cartridge, the controller of the remote device is configured to monitor the information related to the cartridge and to cause the transmitter of the remote device to transmit the information related to the cartridge to a remote server.

No. of Pages : 25 No. of Claims : 42

(12) PATENT APPLICATION PUBLICATION
(19) INDIA
(22) Date of filing of Application :21/12/2020
(21) Application No.202017055505 A
(43) Publication Date : 05/03/2021

(54) Title of the invention : HEAT-SHRINKABLE PLASTIC MEMBER, COMPOSITE PREFORM, AND COMPOSITE CONTAINER

(51) International classification	:B32B0027320000, B29C0049060000, C08L0053020000, B32B0027080000, C08L0009060000
(31) Priority Document No	:2018-140763
(32) Priority Date	:26/07/2018
(33) Name of priority country	:Japan
(86) International Application No	:PCT/JP2019/029221
Filing Date	:25/07/2019
(87) International Publication No	:WO 2020/022432
(61) Patent of Addition to Application Number	:NA
Filing Date	:NA
(62) Divisional to Application Number	:NA
Filing Date	:NA

(71)**Name of Applicant :**
1)MITSUBISHI CHEMICAL CORPORATION
Address of Applicant :1-1, Marunouchi 1-chome, Chiyoda-ku, Tokyo 1008251 Japan
2)DAI NIPPON PRINTING CO., LTD.
(72)**Name of Inventor :**
1)IKEDA, Keita
2)ODAWARA, Koji
3)MIWA, Masaki
4)HASHIMOTO, Daichi
5)SUGA, Yusuke
6)MIYAWAKI, Takuma

(57) Abstract :
Provided is a heat-shrinkable plastic member provided to at least part of the outside of a preform comprising a mouth, a body connected to the mouth, and a bottom connected to the body, wherein the heat-shrinkable plastic member is characterized by being provided at least with a layer containing an ionomer resin (A) and an olefin resin (B) as essential components, having a storage modulus of 4.0 — 108 Pa or higher in a 25°C environment, and having a dynamic friction coefficient of 1.1 or lower with respect to the preform, whereby it is possible to markedly improve the ease of insertion of the preform.

No. of Pages : 30 No. of Claims : 20

(12) PATENT APPLICATION PUBLICATION
(19) INDIA
(22) Date of filing of Application :21/12/2020
(21) Application No.202017055518 A
(43) Publication Date : 05/03/2021

(54) Title of the invention : OPTICAL ANALYSIS SYSTEM AND OPTICAL ANALYSIS METHOD

(51) International classification	:G01N0021359000, G01N0021357700, G01N0021356300, G01N0021310000, G01J0003280000
(31) Priority Document No	:2018-109776
(32) Priority Date	:07/06/2018
(33) Name of priority country	:Japan
(86) International Application No	:PCT/JP2019/022417
Filing Date	:05/06/2019
(87) International Publication No	:WO 2019/235542
(61) Patent of Addition to Application Number	:NA
Filing Date	:NA
(62) Divisional to Application Number	:NA
Filing Date	:NA

(71)**Name of Applicant :**
1)YOKOGAWA ELECTRIC CORPORATION
Address of Applicant :9-32, Nakacho 2-chome, Musashino-shi, Tokyo 1808750 Japan
(72)**Name of Inventor :**
1)MURAYAMA Kodai
2)ITO Atsushi
3)OGAWA Junichi
4)MIYAZAKI Shunichi

(57) Abstract :
An optical analysis system 1 according to the present disclosure is provided with: an irradiation unit 11 which irradiates a first starting material A and a second starting material B before the start of synthesis with irradiation light L1, and which irradiates a mixture C after the start of synthesis with irradiation light L1 in a chemical reaction system 30 for synthesizing a product AB from the first starting material A and the second starting material B; a detection unit 12 which detects measurement light L2 that contains information on respective spectroscopic spectra of the first starting material A, the second starting material B and the mixture C; and an arithmetic unit 22 which calculates the respective spectroscopic spectra of the first starting material A, the second starting material B and the mixture C, and which calculates the spectroscopic spectrum of the product AB.

No. of Pages : 40 No. of Claims : 14

(12) PATENT APPLICATION PUBLICATION
(19) INDIA
(22) Date of filing of Application :21/12/2020
(21) Application No.202017055522 A
(43) Publication Date : 05/03/2021

(54) Title of the invention : ENGINE VALVE ACTUATION SYSTEMS WITH LOST MOTION VALVE TRAIN COMPONENTS, INCLUDING COLLAPSING VALVE BRIDGES WITH LOCKING PINS

(51) International classification	:F01L0013000000, F01L0001260000, F01L0001180000, F01L0001460000, G01M0003280000
(31) Priority Document No	:62/691947
(32) Priority Date	:29/06/2018
(33) Name of priority country	:U.S.A.
(86) International Application No	:PCT/US2019/039578
Filing Date	:27/06/2019
(87) International Publication No	:WO 2020/006282
(61) Patent of Addition to Application Number	:NA
Filing Date	:NA
(62) Divisional to Application Number	:NA
Filing Date	:NA

(71)**Name of Applicant :**
1)JACOBS VEHICLE SYSTEMS, INC.
Address of Applicant :22 East Dudley Town Road Bloomfield, CT 06002 U.S.A.
(72)**Name of Inventor :**
1)BALTRUCKI, Justin, D.

(57) Abstract :
Systems for valve actuation in internal combustion engines provide configurations for collapsing valve train components, particularly collapsing valve bridges. Various configurations for locking a bridge piston to a bridge housing include substantially cylindrical locking pins that may be housed within a substantially cylindrical receptacles defined by a transverse bore in the bridge piston and actuated hydraulically and may include an actuating pin that interacts with the locking pins to synchronize motion and provide positive positioning within an annular recess in the bridge housing to lock or unlock the bridge piston for movement relative to the bridge housing. Various geometries for locking pins and actuating pins provide benefits of manufacturing, ease of assembly, alignment and reduced wear.

No. of Pages : 19 No. of Claims : 16

(12) PATENT APPLICATION PUBLICATION
(21) Application No.202017055560 A
(19) INDIA
(22) Date of filing of Application :21/12/2020
(43) Publication Date : 05/03/2021

(54) Title of the invention : A-HYDROXYISOBUTYRIC ACID ESTER COMPOUND, FRAGRANCE MATERIAL COMPOSITION AND USE AS FRAGRANCE MATERIAL

(51) International classification	:G03F0007004000, C11B0009000000, G03F0007039000, A61K0008600000, A61K0031702800	(71)**Name of Applicant :** **1)MITSUBISHI GAS CHEMICAL COMPANY, INC.** Address of Applicant :5-2, Marunouchi 2-chome, Chiyoda-ku, Tokyo 1008324 Japan
(31) Priority Document No	:2018-121112	(72)**Name of Inventor :**
(32) Priority Date	:26/06/2018	**1)OKAMOTO, Atsushi**
(33) Name of priority country	:Japan	**2)KUSHIDA, Eriko**
(86) International Application No	:PCT/JP2019/025396	**3)YOKOBORI, Umi**
Filing Date	:26/06/2019	**4)KIMURA, Kyoko**
(87) International Publication No	:WO 2020/004468	
(61) Patent of Addition to Application Number	:NA	
Filing Date	:NA	
(62) Divisional to Application Number	:NA	
Filing Date	:NA	

(57) Abstract :
A fragrance material composition which contains a compound represented by formula (1). In formula (1), R represents a linear, branched or cyclic alkyl group having 2-6 carbon atoms.

No. of Pages : 31 No. of Claims : 8

(12) PATENT APPLICATION PUBLICATION
(19) INDIA
(22) Date of filing of Application :21/12/2020
(21) Application No.202017055569 A
(43) Publication Date : 05/03/2021

(54) Title of the invention : SEAL CARTRIDGE LATCH DESIGN FOR TROCAR ASSEMBLIES

(51) International classification	:A61B0017340000, A61B0017020000, A61B0017000000, F16K0003040000, G01M0013040000
(31) Priority Document No	:16/034942
(32) Priority Date	:13/07/2018
(33) Name of priority country	:U.S.A.
(86) International Application No	:PCT/IB2019/055964
Filing Date	:12/07/2019
(87) International Publication No	:WO 2020/012433
(61) Patent of Addition to Application Number	:NA
Filing Date	:NA
(62) Divisional to Application Number	:NA
Filing Date	:NA

(71)**Name of Applicant :**
1)ETHICON LLC
Address of Applicant :#475 Street C, Suite 401 Los Frailes Industrial Park Guaynabo, USA, 00969 U.S.A.
(72)**Name of Inventor :**
1)HALL, Steven G.
2)MOZLOOM, JR., Joseph Thomas
3)SCHMID, Katherine J.
4)ADAMS, Harry Randolph

(57) Abstract :
A trocar assembly (100) that includes a trocar (102) and a seal cartridge (104) configured to be releasably coupled to the trocar. The seal cartridge includes a top cap that includes a main body and a latch ring. The latch ring is grounded to the main body at a first angular position and has a latch (110) located at a second angular position angularly offset from the first angular position. Applying a radial load on the latch causes the latch ring to flex in torsion at an intermediate portion that angularly interposes the first and second angular positions.

No. of Pages : 18 No. of Claims : 20

(12) PATENT APPLICATION PUBLICATION
(19) INDIA
(22) Date of filing of Application :21/12/2020
(21) Application No.202017055570 A
(43) Publication Date : 05/03/2021

(54) Title of the invention : SKIN CLOSURE DEVICES WITH INTERRUPTED CLOSURE

(51) International classification	:A61F0013020000, A61B0017000000, A61F0013000000, A61L0015420000, A61L0024040000
(31) Priority Document No	:16/050205
(32) Priority Date	:31/07/2018
(33) Name of priority country	:U.S.A.
(86) International Application No	:PCT/IB2019/056214
Filing Date	:19/07/2019
(87) International Publication No	:WO 2020/026063
(61) Patent of Addition to Application Number	:NA
Filing Date	:NA
(62) Divisional to Application Number	:NA
Filing Date	:NA

(71)**Name of Applicant :**
1)ETHICON, INC.
Address of Applicant :P.O. Box 151 U.S. Route 22 Somerville, New Jersey 08876 U.S.A.
(72)**Name of Inventor :**
1)QUINTERO, Julian
2)KRIKSUNOV, Leo B.
3)WOLFE, Elena

(57) Abstract :
A device for application onto incisions or wounds with a liquid rapidly polymerizable adhesive for forming skin closure systems, comprising a flat porous mesh elongated along a longitudinal axis and having an upper side and an opposing lower or wound facing side and a central portion in immediate vicinity of the axis; further having a plurality of pores and windows in said mesh, said windows substantially larger than said pores and arranged along said longitudinal axis in said central portion; a crosslinking or polymerization accelerator or initiator disposed in or on said mesh; and a pressure sensitive adhesive disposed on at least a portion of the lower surface of said mesh.

No. of Pages : 25 No. of Claims : 19

(12) PATENT APPLICATION PUBLICATION
(19) INDIA
(22) Date of filing of Application :21/12/2020
(21) Application No.202017055575 A
(43) Publication Date : 05/03/2021

(54) Title of the invention : DATA ANALYTICS MANAGEMENT, CONFIGURATION SPECIFICATION AND PROCEDURES, PROVISIONING, AND SERVICE BASED ARCHITECTURE

(51) International classification	:H04L0012240000, H04L0029080000, H04W0048180000, H04W0004500000, H04W0084100000
(31) Priority Document No	:62/688603
(32) Priority Date	:22/06/2018
(33) Name of priority country	:U.S.A.
(86) International Application No	:PCT/CN2019/091774
Filing Date	:18/06/2019
(87) International Publication No	:WO 2019/242624
(61) Patent of Addition to Application Number	:NA
Filing Date	:NA
(62) Divisional to Application Number	:NA
Filing Date	:NA

(71)**Name of Applicant :**
1)HUAWEI TECHNOLOGIES CO., LTD.
Address of Applicant :Huawei Administration Building Bantian, Longgang District Shenzhen, Guangdong 518129 China
(72)**Name of Inventor :**
1)RAHMAN, Mohammad Moshiur
2)BOR-YALINIZ, Remziye Irem
3)SENARATH, Nimal Gamini
4)LIANG, Chengchao
5)ZHANG, Hang

(57) Abstract :
Methods and apparatuses for service based architecture (SBA) for data analytics management (DAM) are disclosed. Configuration specifications are provided for configuring DAM entities for infrastructure management by infrastructure managers (InfMs), customer service managers (CSMs) for network slice subnet instance (NSSI), network slice instance (NSI) and service instance (SI) management, content and forwarding managers (CFM) for content and content cache management. Also provided methods and apparatus for data analytics service provisioning regardless of DAM architecture.

No. of Pages : 85 No. of Claims : 28

(12) PATENT APPLICATION PUBLICATION
(19) INDIA
(22) Date of filing of Application :21/12/2020
(21) Application No.202017055580 A
(43) Publication Date : 05/03/2021

(54) Title of the invention : CHIMERIC GROWTH FACTOR RECEPTORS

(51) International classification	:A61K0035170000, C12N0005078300, A61K0038000000, A61K0039000000, A61K0035120000
(31) Priority Document No	:1810181.6
(32) Priority Date	:21/06/2018
(33) Name of priority country	:U.K.
(86) International Application No	:PCT/GB2019/051745
Filing Date	:21/06/2019
(87) International Publication No	:WO 2019/243835
(61) Patent of Addition to Application Number	:NA
Filing Date	:NA
(62) Divisional to Application Number	:NA
Filing Date	:NA

(71)**Name of Applicant :**
1)INSTIL BIO (UK) LIMITED
Address of Applicant :48 Grafton Street Manchester M13 9XX U.K.
(72)**Name of Inventor :**
1)PRICE, Nicola Kaye
2)BRIDGEMAN, John Stephen

(57) Abstract :
Adoptive cell therapy involves the transfer of autologous or allogeneic cells to patients in an effort to treat a variety of diseases. In the area of immunotherapy, tumour specific T-cells can be grown ex vivo, or engrafted with tumour specificity via genetic engineering approaches, prior to reinfusion. T-cell infusions require a pre-conditioning treatment, and often a post infusion treatment of IL-2, in an effort to enhance persistence and engraftment. Herein we show that T- cells can be engineered to express a Chimeric recombinant Growth Factor Receptor (CrGFR) which allows the selective survival and/or expansion of T-cells upon administration of a clinically available drug, Eltrombopag.

No. of Pages : 43 No. of Claims : 32

(12) PATENT APPLICATION PUBLICATION
(19) INDIA
(22) Date of filing of Application :21/12/2020
(21) Application No.202017055596 A
(43) Publication Date : 05/03/2021

(54) Title of the invention : AMPLIFICATION METHOD AND PRIMERS FOR USE THEREIN

(51) International classification	:C12Q0001688600, C12Q0001685800, C12Q0001688100, C12Q0001684800, C12Q0001688300
(31) Priority Document No	:62/683415
(32) Priority Date	:11/06/2018
(33) Name of priority country	:U.S.A.
(86) International Application No	:PCT/AU2019/050591
Filing Date	:07/06/2019
(87) International Publication No	:WO 2019/237146
(61) Patent of Addition to Application Number	:NA
Filing Date	:NA
(62) Divisional to Application Number	:NA
Filing Date	:NA

(71)**Name of Applicant :**
1)MONOQUANT PTY LTD
Address of Applicant :147 Frome Street Adelaide, South Australia 5000 Australia
(72)**Name of Inventor :**
1)MORLEY, Alexander, Alan

(57) Abstract :
The present invention relates generally to an improved method of amplifying a nucleic acid region of interest and to primers for use therein. More particularly, the present invention is directed to an improved method of amplifying a nucleic acid region which has resulted from the recombination of two or more immunoglobulin or T cell receptor gene segments and primers for use therein. The method of the present invention is based on the determination that performing the amplification step at an annealing temperature determined relative to the critical annealing temperature unique to a given reaction and/or using optimised primers enables higher levels of sensitivity than have previously been achievable in the context of prior art methods of amplifying rearranged immunological or T cell receptor genes. The method of the present invention is particularly useful where the subject recombination target comprises only one N region. The provision of a highly sensitive yet simple means of detecting specific immunological and T cell receptor nucleic acid recombination events is useful in a range of applications including, but not limited to, the diagnosis and/or monitoring of clonal lymphoid cell populations or disease conditions which are characterised by specific V/D/J recombination events (such as detecting minimal residual disease in leukaemias) or the analysis or identification of immunological or T cell receptor gene regions of interest.

No. of Pages : 48 No. of Claims : 35

(12) PATENT APPLICATION PUBLICATION
(21) Application No.202017055597 A
(19) INDIA
(22) Date of filing of Application :21/12/2020
(43) Publication Date : 05/03/2021

(54) Title of the invention : OPTICAL SYSTEM INCLUDING LIGHT-GUIDE OPTICAL ELEMENT WITH PARTIALLY-REFLECTIVE INTERNAL SURFACES

(51) International classification	:G02B0027000000, G02B0027010000, G02B0027280000, F21V0008000000, G02B0001115000	(71)**Name of Applicant :** **1)LUMUS LTD.** Address of Applicant :8 Pinchas Sapir Street 7403631 Ness Ziona Israel
(31) Priority Document No	:62/675205	(72)**Name of Inventor :** **1)RONEN, Eitan**
(32) Priority Date	:23/05/2018	
(33) Name of priority country	:U.S.A.	
(86) International Application No	:PCT/IB2019/054272	
Filing Date	:23/05/2019	
(87) International Publication No	:WO 2019/224764	
(61) Patent of Addition to Application Number	:NA	
Filing Date	:NA	
(62) Divisional to Application Number	:NA	
Filing Date	:NA	

(57) Abstract :
An optical system includes a light-guide optical element (LOE) (100) having a pair of parallel major external surfaces (102, 104) and a set of mutually-parallel reflector surfaces (106a, 106b, 106c) obliquely angled within the LOE. At least one of the reflector surfaces has high reflectivity for angles of incidence above 60 degrees to the normal and partial reflectivity for angles of incidence less than 35 degrees to the normal.

No. of Pages : 13 No. of Claims : 11

(12) PATENT APPLICATION PUBLICATION
(19) INDIA
(22) Date of filing of Application :21/12/2020
(21) Application No.202017055598 A
(43) Publication Date : 05/03/2021

(54) Title of the invention : AMPLIFICATION METHOD

(51) International classification	:C12Q0001688600, C12Q0001685800, C12Q0001684800, C12Q0001688100, C12N0015100000
(31) Priority Document No	:62/683415
(32) Priority Date	:11/06/2018
(33) Name of priority country	:U.S.A.
(86) International Application No	:PCT/AU2019/050590
Filing Date	:07/06/2019
(87) International Publication No	:WO 2019/237145
(61) Patent of Addition to Application Number	:NA
Filing Date	:NA
(62) Divisional to Application Number	:NA
Filing Date	:NA

(71)**Name of Applicant :**
1)MONOQUANT PTY LTD
Address of Applicant :147 Frome Street Adelaide, South Australia 5000 Australia
(72)**Name of Inventor :**
1)MORLEY, Alexander, Alan

(57) Abstract :
The present invention relates generally to an improved method of amplifying a nucleic acid region of interest and to primers for use therein. More particularly, the present invention is directed to an improved method of amplifying a nucleic acid region which has resulted from the recombination of two or more immunoglobulin or T cell receptor gene segments and primers for use therein. The method of the present invention is based on the determination that performing the amplification step using primers which exhibit a high Tm and/or using a high annealing temperature enables higher levels of sensitivity than has previously been achievable in the context of prior art methods of amplifying rearranged immunological or T cell receptor genes. Still further improvements in sensitivity are achievable where the subject primer hybridises to at least two N regions of the recombined gene. The provision of a highly sensitive yet simple means of detecting specific immunological and T cell receptor nucleic acid recombination events is useful in a range of applications including, but not limited to, the diagnosis and/or monitoring of clonal lymphoid cell populations or disease conditions which are characterised by specific V/D/J recombination events (such as detecting minimal residual disease in leukaemias) or the analysis or identification of immunological or T cell receptor gene regions of interest.

No. of Pages : 47 No. of Claims : 35

(12) PATENT APPLICATION PUBLICATION
(19) INDIA
(22) Date of filing of Application :21/12/2020
(21) Application No.202017055605 A
(43) Publication Date : 05/03/2021

(54) Title of the invention : IMMUNOGENIC PRODUCT COMPRISING IL-4 AND/OR IL-13 FOR TREATING DISORDERS ASSOCIATED WITH ABERRANT IL-4 AND/OR IL 13 EXPRESSION OR ACTIVITY

(51) International classification	:A61K0039000000, A61P0011060000, A61K0047640000, A61P0037060000, A61P0037080000
(31) Priority Document No	:18305651.4
(32) Priority Date	:29/05/2018
(33) Name of priority country	:EPO
(86) International Application No	:PCT/EP2019/064025
Filing Date	:29/05/2019
(87) International Publication No	:WO 2019/229153
(61) Patent of Addition to Application Number	:NA
Filing Date	:NA
(62) Divisional to Application Number	:NA
Filing Date	:NA

(71)**Name of Applicant :**
1)NEOVACS
Address of Applicant :3-5 impasse Reille 75014 Paris France
2)INSERM (INSTITUT NATIONAL DE LA SANT‰ ET DE LA RECHERCHE M‰DICALE)
3)INSTITUT PASTEUR
(72)**Name of Inventor :**
1)GROUARD-VOGEL, Graldine
2)CONDE GARCA, Eva
3)BERTRAND, Romain
4)CAILLOT, Nomie
5)REBER, Laurent
6)BRUHNS, Pierre
7)SERRA, Vincent

(57) Abstract :
The present invention relates to an immunogenic product comprising a cytokine conjugated with a carrier protein, wherein the cytokine is selected from the group comprising IL-4, IL-13 and mixtures thereof, and wherein the carrier protein is CRM197. The present invention further relates to a method for manufacturing the immunogenic product of the invention. The present invention also relates to the therapeutic use of the immunogenic product of the invention for treating an inflammatory disorder associated with aberrant IL-4 and/or IL-13 expression or activity.

No. of Pages : 79 No. of Claims : 16

(12) PATENT APPLICATION PUBLICATION
(19) INDIA
(22) Date of filing of Application :21/12/2020

(21) Application No.202017055615 A
(43) Publication Date : 05/03/2021

(54) Title of the invention : METHODS TO UPDATE PFD RULES FOR APPLICATIONS AND RELATED NETWORK NODES

(51) International classification	:H04W0004240000, H04L0012260000, H04L0012140000, H04L0029060000, H04M0015000000
(31) Priority Document No	:18382408.5
(32) Priority Date	:08/06/2018
(33) Name of priority country	:EPO
(86) International Application No	:PCT/IB2018/055401
Filing Date	:19/07/2018
(87) International Publication No	:WO 2019/234481
(61) Patent of Addition to Application Number	:NA
Filing Date	:NA
(62) Divisional to Application Number	:NA
Filing Date	:NA

(71)**Name of Applicant :**
1)TELEFONAKTIEBOLAGET LM ERICSSON (PUBL)
Address of Applicant :SE-164 83 Stockholm Sweden
(72)**Name of Inventor :**
1)ALONSO FRANCO, Esperanza
2)MAS ROSIQUE, Maria Luisa
3)MU'OZ DE LA TORRE ALONSO, Miguel Angel
4)PUENTE PESTA'A, Miguel Angel

(57) Abstract :
A method may be provided to operate a first network node (559) of a wireless communication network. The method may include receiving (1105) a request from a second network node (557) to activate packet flow descriptor PFD extraction with respect to a session for a wireless device (551), and receiving (1109) application traffic for the wireless device, wherein an address is provided to route the application traffic. The method may also include determining (1115) an application identifier for the address responsive to the address for the application traffic being unknown to the first network node (559), and transmitting (1117) a PFD notification to the second network node (557), wherein the PFD notification includes the application identifier.

No. of Pages : 29 No. of Claims : 42

(12) PATENT APPLICATION PUBLICATION
(21) Application No.202017055616 A
(19) INDIA
(22) Date of filing of Application :21/12/2020
(43) Publication Date : 05/03/2021

(54) Title of the invention : METHODS, NETWORK NODES, AND COMPUTER PROGRAMS FOR TRANSMIT TIMING ADJUSTMENT

(51) International classification	:H04W0056000000, H04W0076500000, H04W0036000000, H04W0068000000, H04W0028120000
(31) Priority Document No	:NA
(32) Priority Date	:NA
(33) Name of priority country	:NA
(86) International Application No	:PCT/EP2018/067116
Filing Date	:26/06/2018
(87) International Publication No	:WO 2020/001753
(61) Patent of Addition to Application Number	:NA
Filing Date	:NA
(62) Divisional to Application Number	:NA
Filing Date	:NA

(71)**Name of Applicant :**
1)TELEFONAKTIEBOLAGET LM ERICSSON (PUBL)
Address of Applicant :SE-164 83 Stockholm Sweden
(72)**Name of Inventor :**
1)HASHEMI, Mona
2)SAHLIN, Henrik
3)ERIKSSON, Per-Erik
4)MAKKI, Behrooz
5)BAO, Lei

(57) Abstract :
There is provided mechanisms for transmit time adjustment. A method is performed by a second network node. The method comprises obtaining an indication of a need for transmit time adjustment with a first network node during ongoing communication with the first network node. The method comprises providing a first notification to at least one third network node to adjust its receive timing for receiving a signal from the second network node as part of ongoing communication with the second network node. The method comprises adjusting transmit timing for transmitting a first signal to the first network node as part of the ongoing communication with the first network node and for transmitting at least one second signal to the at last one third network node as part of the ongoing communication with the at least one third network node.

No. of Pages : 24 No. of Claims : 24

(12) PATENT APPLICATION PUBLICATION
(19) INDIA
(22) Date of filing of Application :21/12/2020
(21) Application No.202017055642 A
(43) Publication Date : 05/03/2021

(54) Title of the invention : LOADABLE POROUS STRUCTURES FOR USE AS IMPLANTS

(51) International classification	:A61F0002300000, A61K0009140000, A61L0027540000, A61L0027360000, C08J0009400000
(31) Priority Document No	:62/689733
(32) Priority Date	:25/06/2018
(33) Name of priority country	:U.S.A.
(86) International Application No	:PCT/US2019/039070
Filing Date	:25/06/2019
(87) International Publication No	:WO 2020/005999
(61) Patent of Addition to Application Number	:NA
Filing Date	:NA
(62) Divisional to Application Number	:NA
Filing Date	:NA

(71)**Name of Applicant :**
1)TITAN PHARMACEUTICALS, INC.
Address of Applicant :400 Oyster Point Blvd. Suite 505 South San Francisco, California 94080-1921 U.S.A.
(72)**Name of Inventor :**
1)PATEL, Rajesh A.

(57) Abstract :
Loadable porous structures are disclosed, which are structures with pre-formed pores. The loadable porous structures can be loaded with pharmaceutical substances and optional excipients. The loaded porous structures can then be used as implants, for implantation into a patient for release of pharmaceutical substances over long periods of time. Methods of making and using such structures and implants are also disclosed.

No. of Pages : 36 No. of Claims : 28

(12) PATENT APPLICATION PUBLICATION
(19) INDIA
(22) Date of filing of Application :21/12/2020

(21) Application No.202017055643 A
(43) Publication Date : 05/03/2021

(54) Title of the invention : DEVICE FOR CARRYING OUT INTERVENTIONS ON A NUCLEAR FUEL ASSEMBLY

(51) International classification	:B25J0019000000, G21C0017060000, B25J0009100000, A61B0034000000, B25J0009120000
(31) Priority Document No	:18 55737
(32) Priority Date	:26/06/2018
(33) Name of priority country	:France
(86) International Application No	:PCT/EP2019/067066
Filing Date	:26/06/2019
(87) International Publication No	:WO 2020/002463
(61) Patent of Addition to Application Number	:NA
Filing Date	:NA
(62) Divisional to Application Number	:NA
Filing Date	:NA

(71)**Name of Applicant :**
1)FRAMATOME
Address of Applicant :1 place Jean Millier Tour Areva 92400 COURBEVOIE France
(72)**Name of Inventor :**
1)WEGELER, Pierre
2)OUNISSI, Mourad

(57) Abstract :
The device for carrying out interventions comprises an articulated robot arm (22) comprising a securing base (26), a terminal member (28) and at least one arm segment (30, 32) connecting the base (26) to the terminal member (28), and an intervention member (24) carried by the terminal member (28), the intervention member (24) being configured to carry out interventions on the nuclear fuel assembly (2).

No. of Pages : 18 No. of Claims : 15

(12) PATENT APPLICATION PUBLICATION
(19) INDIA
(22) Date of filing of Application :21/12/2020
(21) Application No.202017055644 A
(43) Publication Date : 05/03/2021

(54) Title of the invention : WATER TREATMENT METHOD

(51) International classification	:C02F0003100000, C02F0003340000, B09B0003000000, C02F0101160000, C02F0003060000
(31) Priority Document No	:2018-124399
(32) Priority Date	:29/06/2018
(33) Name of priority country	:Japan
(86) International Application No	:PCT/JP2019/025978
Filing Date	:28/06/2019
(87) International Publication No	:WO 2020/004662
(61) Patent of Addition to Application Number	:NA
Filing Date	:NA
(62) Divisional to Application Number	:NA
Filing Date	:NA

(71)**Name of Applicant :**
1)KURARAY CO., LTD.
Address of Applicant :1621, Sakazu, Kurashiki-shi, Okayama 7100801 Japan
(72)**Name of Inventor :**
1)HIRAI, Yusuke
2)HAYASHI, Yoshiyuki
3)OSAWA, Takuya
4)UKAI, Yu
5)YOSHIHARA, Mototsugu

(57) Abstract :
A water treatment method in which to-be-treated water that contains organic matter and ammonia nitrogen is caused to pass through a reaction tank holding a carrier and is treated under aerobic conditions, wherein the water treatment method is configured so that: the water content of the carrier is 50-96%; the carrier has communicating holes having a hole diameter of 30 μm or less; the organic matter concentration of the to-be-treated water is 100 mg/L or less according to BOD5, and the ammonia nitrogen concentration in the to-be-treated water is 50 mg/L or less; the retention time of the to-be-treated water in the reaction tank is 2 hours or less; and both the organic matter and the ammonia nitrogen in the to-be-treated water are treated in the same tank. This makes it possible, when performing biological treatment on to-be-treated water that contains organic matter and ammonia, to obtain treated water having exceptional stabilized treatment properties even when the concentration of organic suspended solids in the to-be-treated water is low.

No. of Pages : 24 No. of Claims : 6

(12) PATENT APPLICATION PUBLICATION
(19) INDIA
(22) Date of filing of Application :21/12/2020
(21) Application No.202017055646 A
(43) Publication Date : 05/03/2021

(54) Title of the invention : METHOD FOR PRODUCING DIARYLPYRIDINE DERIVATIVES

(51) International classification	:A61P0035000000, C07B0061000000, C07B0043040000, C23C0018300000, C07C0253300000
(31) Priority Document No	:2018-127197
(32) Priority Date	:04/07/2018
(33) Name of priority country	:Japan
(86) International Application No	:PCT/JP2019/026395
Filing Date	:03/07/2019
(87) International Publication No	:WO 2020/009132
(61) Patent of Addition to Application Number	:NA
Filing Date	:NA
(62) Divisional to Application Number	:NA
Filing Date	:NA

(71)**Name of Applicant :**
1)DAIICHI SANKYO COMPANY, LIMITED
Address of Applicant :3-5-1, Nihonbashi Honcho, Chuo-ku, Tokyo 1038426 Japan
(72)**Name of Inventor :**
1)AKI Yuichi
2)TORIYAMA Fumihiko
3)SAKURAI Natsuki
4)KAMEDA Ai
5)OGURA Tomokazu

(57) Abstract :
The present invention pertains to a novel method for producing diarylpyridine derivatives, the purpose of the present invention being to provide a industrially useful, novel method. A novel method for synthesizing pyridine rings without using palladium, a strong base, or reaction under high temperature was developed. In particular, success was achieved in developing methods enabling synthesis under very mild reaction conditions in the synthesis of iminium salts, which are intermediates, in the synthesis of cyano compounds from iminium salts, and in cyclization into pyridines.

No. of Pages : 38 No. of Claims : 13

(12) PATENT APPLICATION PUBLICATION
(19) INDIA
(22) Date of filing of Application :21/12/2020
(21) Application No.202017055647 A
(43) Publication Date : 05/03/2021

(54) Title of the invention : IMPLANTS FOR RELEASE OF LIPOPHILIC OR AMPHIPHILIC PHARMACEUTICAL SUBSTANCES

(51) International classification	:A61L0027540000, A61K0045060000, A61K0009200000, A61K0009140000, A61F0002300000
(31) Priority Document No	:62/689735
(32) Priority Date	:25/06/2018
(33) Name of priority country	:U.S.A.
(86) International Application No	:PCT/US2019/039072
Filing Date	:25/06/2019
(87) International Publication No	:WO 2020/006000
(61) Patent of Addition to Application Number	:NA
Filing Date	:NA
(62) Divisional to Application Number	:NA
Filing Date	:NA

(71)**Name of Applicant :**
1)TITAN PHARMACEUTICALS, INC.
Address of Applicant :400 Oyster Point Blvd. Suite 505 South San Francisco, California 94080-1921 U.S.A.
(72)**Name of Inventor :**
1)PATEL, Rajesh A.
2)SREEDHARAN, Sunil
3)FURMAN, Benjamin

(57) Abstract :
Implants are described which comprise lipophilic pharmaceutical substances. Excipients are used which provide appropriate and controllable/tunable release of the lipophilic drug from the matrix of the implant. The implants can be implanted into a patient for release of the pharmaceutical substances. Methods of making and using such implants are also described.

No. of Pages : 30 No. of Claims : 44

(12) PATENT APPLICATION PUBLICATION
(19) INDIA
(22) Date of filing of Application :21/12/2020

(21) Application No.202017055648 A
(43) Publication Date : 05/03/2021

(54) Title of the invention : PORTABLE DETECTION SYSTEM COMPRISING MAGNETOSTATIC SENSORS

(51) International classification	:G01R0033090000, G01S0013860000, G01V0003080000, G01V0003100000, G09B0019000000
(31) Priority Document No	:1855903
(32) Priority Date	:28/06/2018
(33) Name of priority country	:France
(86) International Application No	:PCT/EP2019/067475
Filing Date	:28/06/2019
(87) International Publication No	:WO 2020/002680
(61) Patent of Addition to Application Number	:NA
Filing Date	:NA
(62) Divisional to Application Number	:NA
Filing Date	:NA

(71)**Name of Applicant :**
1)MANNESCHI, Alessandro
Address of Applicant :13, Via XXV Aprile 52100 AREZZO Italy
(72)**Name of Inventor :**
1)MANNESCHI, Alessandro

(57) Abstract :
The invention relates to a system for detecting a target object, comprising: - a first detector (10) that has at least a first magnetic sensor (5) and at least one transmitter (8), - a second detector (20) which differs from the first detector (10) and comprises at least one second magnetic sensor (5) and at least one transmitter (8), and - at least one processing unit (6) configured to receive the signals which indicate an intensity of a magnetic field detected by the first magnetic sensor (5) and/or the second magnetic sensor (5), and - a communication interface (7) which is configured to transmit the signal generated by the first and/or the second magnetic sensor (5) to the processing unit (6), said processing unit (6) being configured to send instructions to generate an alarm to the transmitter (8) of the first detector (10) and/or the second detector (20).

No. of Pages : 37 No. of Claims : 21

(12) PATENT APPLICATION PUBLICATION
(19) INDIA
(22) Date of filing of Application :21/12/2020
(21) Application No.202017055650 A
(43) Publication Date : 05/03/2021

(54) Title of the invention : METHODS FOR GENERATING HEMATOPOIETIC STEM CELLS

(51) International classification	:C12N0005078900, C12N0015000000, A61K0031500000, C12N0009100000, A61K0031137000
(31) Priority Document No	:62/681982
(32) Priority Date	:07/06/2018
(33) Name of priority country	:U.S.A.
(86) International Application No	:PCT/US2019/035949
Filing Date	:07/06/2019
(87) International Publication No	:WO 2019/236943
(61) Patent of Addition to Application Number	:NA
Filing Date	:NA
(62) Divisional to Application Number	:NA
Filing Date	:NA

(71)**Name of Applicant :**
1)THE BRIGHAM AND WOMEN'S HOSPITAL, INC.
Address of Applicant :75 Francis Street Boston, MA 02115 U.S.A.
(72)**Name of Inventor :**
1)SHAH, Dhvanit, I.

(57) Abstract :
In some aspects and embodiments, the invention provides methods for making hematopoietic stem cells, including for HSCT. The method comprises providing a cell population comprising hemogenic endothelial (HE) or endothelial cells, and increasing activity or expression of DNA (cytosine-5-)-methyltransferase 3 beta (Dnmt3b) and/or GTPase IMAP Family Member 6 (Gimap6) in the HE and/or endothelial cells under conditions sufficient for stimulating formation of HSCs.

No. of Pages : 31 No. of Claims : 26

(12) PATENT APPLICATION PUBLICATION
(19) INDIA
(22) Date of filing of Application :21/12/2020

(21) Application No.202017055656 A
(43) Publication Date : 05/03/2021

(54) Title of the invention : ELECTRONIC HAND STAMP

(51) International classification	:B41J0003360000, H05B0045000000, H04N0001387000, G08B0013190000, F21V0023040000
(31) Priority Document No	:18179493.4
(32) Priority Date	:25/06/2018
(33) Name of priority country	:EPO
(86) International Application No	:PCT/EP2019/066805
Filing Date	:25/06/2019
(87) International Publication No	:WO 2020/002319
(61) Patent of Addition to Application Number	:NA
Filing Date	:NA
(62) Divisional to Application Number	:NA
Filing Date	:NA

(71)**Name of Applicant :**
1)COLOP DIGITAL GMBH
Address of Applicant :Dr.-Arming-Strae 5 4600 Wels Austria
(72)**Name of Inventor :**
1)BRETON, Alex

(57) Abstract :
Electronic hand stamp (1) comprising: an inkjet printhead with nozzles directed toward a bottom side (4) of the electronic hand stamp (1), a control circuit (30) and a motion detector, wherein the control circuit (30) is connected to the motion detector and to the inkjet printhead and configured to control the inkjet printhead in response to readings received from the motion detector, wherein the electronic hand stamp (1) comprises at least four indicator LEDs (10-17) connected to the control circuit (30), wherein at least one of the at least four indicator LEDs (10-17) is arranged on every side perpendicular to the bottom side (4) of the electronic hand stamp (1).

No. of Pages : 9 No. of Claims : 21

(12) PATENT APPLICATION PUBLICATION
(19) INDIA
(22) Date of filing of Application :22/12/2020
(21) Application No.202017055670 A
(43) Publication Date : 05/03/2021

(54) Title of the invention : ADHESIVE COMPOSITIONS

(51) International classification	:C09J0131040000, C09G0001020000, C08K0009060000, B41C0001100000, C09D0005020000
(31) Priority Document No	:18180439.4
(32) Priority Date	:28/06/2018
(33) Name of priority country	:EPO
(86) International Application No	:PCT/EP2019/065487
Filing Date	:13/06/2019
(87) International Publication No	:WO 2020/001989
(61) Patent of Addition to Application Number	:NA
Filing Date	:NA
(62) Divisional to Application Number	:NA
Filing Date	:NA

(71)**Name of Applicant :**
1)NOURYON CHEMICALS INTERNATIONAL B.V.
Address of Applicant :Velperweg 76 6824 BM Arnhem Netherlands
(72)**Name of Inventor :**
1)RESTORP, Per Anders
2)LAGNEMO, Hans
3)GREENWOOD, Peter Harry Johan

(57) Abstract :
The invention is directed to a method for preparing an adhesive composition, in which an aqueous phase comprising a modified colloidal silica is mixed with an organic phase comprising one or more monomers in the presence of an initiator, wherein conditions are maintained such that polymerisation of the one or more monomers occurs to form an aqueous polymeric dispersion, wherein; (i) the aqueous polymeric dispersion comprises polymer particles with protective colloid on their surface; (ii) the modified colloidal silica comprises colloidal silica particles with at least one surface-bound hydrophilic organosilane moiety and/or comprises colloidal silica particles with at least one additional element on its surface, the element being able formally to adopt a +3 or +4 oxidation state; and (ill) the initiator is at least partially soluble in water. The invention is also directed to an adhesive composition which can be made by the above method, wherein at least a portion of the colloidal silica particles chemically interact with the protective colloid.

No. of Pages : 49 No. of Claims : 15

(12) PATENT APPLICATION PUBLICATION
(19) INDIA
(22) Date of filing of Application :22/12/2020
(21) Application No.202017055685 A
(43) Publication Date : 05/03/2021

(54) Title of the invention : BATTERY CONTROL DEVICE AND VEHICLE HAVING SAME

(51) International classification	:H02J0007000000, H02J0007340000, H01M0010420000, B60R0016000000, H02J0003320000
(31) Priority Document No	:10-2018-0069530
(32) Priority Date	:18/06/2018
(33) Name of priority country	:Republic of Korea
(86) International Application No	:PCT/KR2018/015388
Filing Date	:06/12/2018
(87) International Publication No	:WO 2019/245120
(61) Patent of Addition to Application Number	:NA
Filing Date	:NA
(62) Divisional to Application Number	:NA
Filing Date	:NA

(71)**Name of Applicant :**
1)SOMUNA CO., LTD.
Address of Applicant :35, Beolpanmal-gil, Munsan-eup Paju-si, Gyeonggi-do 10818 Republic of Korea
(72)**Name of Inventor :**
1)SONG, Jong Won

(57) Abstract :
The present invention provides a vehicle having a battery control device comprising: a power generating device for generating power by receiving energy from an energy source; a main battery for charging the power generated from the power generating device; first and second secondary battery sets for charging auxiliary power remaining from the main battery, including at least two secondary batteries; a power consumption device for receiving power charged from any one of the first or second secondary battery sets, wherein a secondary battery set with a higher battery charge amount between the first and second secondary battery sets is connected to the power consumption device and the other secondary battery set is connected to the power generating device, by comparing the battery charge amount of the first and second secondary battery sets.

No. of Pages : 21 No. of Claims : 15

(12) PATENT APPLICATION PUBLICATION
(21) Application No.202017055686 A
(19) INDIA
(22) Date of filing of Application :22/12/2020
(43) Publication Date : 05/03/2021

(54) Title of the invention : ISOBUTYRIC ACID ESTER COMPOUND HAVING FORMYLOXY GROUP IN A-POSITION, FRAGRANCE MATERIAL COMPOSITION, AND USE AS FRAGRANCE MATERIAL

(51) International classification	:C11B0009000000, A61K0008600000, A61K0047400000, A61K0009160000, G03F0007004000
(31) Priority Document No	:2018-121110
(32) Priority Date	:26/06/2018
(33) Name of priority country	:Japan
(86) International Application No	:PCT/JP2019/025395
Filing Date	:26/06/2019
(87) International Publication No	:WO 2020/004467
(61) Patent of Addition to Application Number	:NA
Filing Date	:NA
(62) Divisional to Application Number	:NA
Filing Date	:NA

(71)**Name of Applicant :**
1)MITSUBISHI GAS CHEMICAL COMPANY, INC.
Address of Applicant :5-2, Marunouchi 2-chome, Chiyoda-ku, Tokyo 1008324 Japan
(72)**Name of Inventor :**
1)OKAMOTO, Atsushi
2)KUSHIDA, Eriko
3)YOKOBORI, Umi

(57) Abstract :
A fragrance material composition which contains a compound represented by formula (1) as an active ingredient. (In formula (1), R1 represents a linear, branched or cyclic alkyl group having 1-6 carbon atoms.)

No. of Pages : 26 No. of Claims : 13

(12) PATENT APPLICATION PUBLICATION
(19) INDIA
(22) Date of filing of Application :22/12/2020

(21) Application No.202017055687 A
(43) Publication Date : 05/03/2021

(54) Title of the invention : SITTING FURNITURE

(51) International classification	:A47C0007500000, A47C0009000000, A47C0001031000, A47C0001030000, A47C0031020000
(31) Priority Document No	:1850599-0
(32) Priority Date	:22/05/2018
(33) Name of priority country	:Sweden
(86) International Application No	:PCT/SE2019/050470
Filing Date	:22/05/2019
(87) International Publication No	:WO 2019/226112
(61) Patent of Addition to Application Number	:NA
Filing Date	:NA
(62) Divisional to Application Number	:NA
Filing Date	:NA

(71)**Name of Applicant :**
1)NATIVE BIONICS SCANDINAVIA AB
Address of Applicant :Wenner-Gren Center, Plan 20 113 46 STOCKHOLM Sweden
(72)**Name of Inventor :**
1)SIGNARSSON, Mikael
2)LID‰N, Erik
3)BOLTER, Martin
4)KRAMBERG, Martin

(57) Abstract :
Sitting furniture (100) comprising a seat (110), a lower leg support (120) and a chest support (130). The invention is characterised in that the seat (110) is arranged to support the posterior thigh (11) and/or buttocks (12) of a seated user (10) such that the femur bone (13) of the seated user (10) is downwards inclined in the anterior direction at an angle of at least 40° downwards in relation to the horizontal, in that the lower leg support (120) is arranged to support the anterior side of the lower legs (14) of the seated user (10), and in that the chest support (130) is arranged to support the chest (15) of the seated user (10) in a forward leaning position of the seated user (10) such that the third lumbar vertebrae body (16) of the seated user (10) is arranged in a support plane (150), which support plane (150) is per- pendicular to the sagittal plane of the user and in which support plane (150) the respective pivot point (17) of the seated user's (10) hip joints and the respective pivot point (18) of the seated user's (10) shoulder joints are also arranged when the posture of the seated user (10) is symmetric about the seated user's (10) sagittal plane.

No. of Pages : 11 No. of Claims : 17

(12) PATENT APPLICATION PUBLICATION
(19) INDIA
(22) Date of filing of Application :22/12/2020
(21) Application No.202017055711 A
(43) Publication Date : 05/03/2021

(54) Title of the invention : DEVICE FOR SPREADING GRANULATE

(51) International classification	:B61C0015100000, B60T0017000000, B60B0039040000, F41B0011730000, B65B0003320000
(31) Priority Document No	:A 50671/2018
(32) Priority Date	:06/08/2018
(33) Name of priority country	:Austria
(86) International Application No	:PCT/EP2019/070955
Filing Date	:05/08/2019
(87) International Publication No	:WO 2020/030559
(61) Patent of Addition to Application Number	:NA
Filing Date	:NA
(62) Divisional to Application Number	:NA
Filing Date	:NA

(71)**Name of Applicant :**
1)NOWE GMBH
Address of Applicant :Heilswannenweg 66 31008 Elze Germany
(72)**Name of Inventor :**
1)REICH, Alexander
2)BARTLING, Werner
3)WEISS, Ralf

(57) Abstract :
The invention relates to a device (1) for spreading granulate (2), in particular for spreading sand into the gap between rail (3) and wheel (4) of a rail vehicle (5), having a housing (6), having at least one inlet (7) for the granulate (2), and having at least one outlet (8) for the granulate (2), having an axially movable dosing piston (9), and having a compressed-air connection (11) which opens out in a pressure chamber (10) and which serves for the actuation of the dosing piston (9) by means of compressed air for the purposes of dosing the granulate (2), wherein at least one bore (14) is provided in the dosing piston (9). To create a device (1) which is of particularly simple and compact construction, a conveying air chamber (12) which is separate from the pressure chamber (10) and which has a compressed-air connection (13) is provided, and the at least one bore (14) in the dosing piston (9) connects the conveying air chamber (12) to the at least one outlet (8) for the granulate (2), such that the granulate (2) can be conveyed to the at least one outlet (8) independently of the dosing by means of compressed air.

No. of Pages : 11 No. of Claims : 20

(12) PATENT APPLICATION PUBLICATION
(19) INDIA
(22) Date of filing of Application :22/12/2020
(21) Application No.202017055722 A
(43) Publication Date : 05/03/2021

(54) Title of the invention : ASK1 INHIBITING AGENTS

(51) International classification	:C07D0401140000, C07D0471040000, A61K0031443900, C07D0401040000, C07D0413120000
(31) Priority Document No	:62/690674
(32) Priority Date	:27/06/2018
(33) Name of priority country	:U.S.A.
(86) International Application No	:PCT/US2019/039156
Filing Date	:26/06/2019
(87) International Publication No	:WO 2020/006031
(61) Patent of Addition to Application Number	:NA
Filing Date	:NA
(62) Divisional to Application Number	:NA
Filing Date	:NA

(71)**Name of Applicant :**
1)BIOGEN MA INC.
Address of Applicant :225 Binney Street Cambridge, MA 02142 U.S.A.
(72)**Name of Inventor :**
1)GONZALEZ LOPEZ DE TURISO, Felix
2)DECHANTSREITER, Michael
3)XIN, Zhili
4)JONES, John, H.
5)HIMMELBAUER, Martin

(57) Abstract :
Provided are compounds of Formula (I): including compounds of Formulas (II), (III) and (IV), wherein X, R1, R2, R3 and n are as defined herein, and pharmaceutically acceptable salts thereof, and methods for their use and production. These compounds can be useful, e.g., in the treatment of disorders responsive to the inhibition of apoptosis signal-regulating kinase 1 (ASK1).

No. of Pages : 50 No. of Claims : 20

(12) PATENT APPLICATION PUBLICATION
(19) INDIA
(22) Date of filing of Application :22/12/2020
(21) Application No.202017055723 A
(43) Publication Date : 05/03/2021

(54) Title of the invention : A PULSE DISCHARGE SYSTEM

(51) International classification	:H02J0007000000, B60R0016030000, G01R0031360000, B60L0058180000, H01M0010440000
(31) Priority Document No	:1808706.4
(32) Priority Date	:29/05/2018
(33) Name of priority country	:U.K.
(86) International Application No	:PCT/EP2019/063458
Filing Date	:24/05/2019
(87) International Publication No	:WO 2019/228921
(61) Patent of Addition to Application Number	:NA
Filing Date	:NA
(62) Divisional to Application Number	:NA
Filing Date	:NA

(71)**Name of Applicant :**
1)MANODYA LIMITED
Address of Applicant :Mespil House Sussex Road Dublin 4 D04 T4A6 Ireland
2)POLITECNICO DI MILANO
(72)**Name of Inventor :**
1)MAGAGNIN, Luca
2)TIRELLA, Vincenzo

(57) Abstract :
There is provided a power supply system (2) for supplying an electrical load (6) using pulse discharge, the system (2) comprising; a first electrical battery (4) for supplying said electrical load (6) using pulse discharge; and a control unit (12) configured to control the first electrical battery (4) to pulse discharge by periodically switching between a discharge state of the first electrical battery (4), when the first electrical battery (4) is connected to said electrical load (6), and a rest state of the first electrical battery (4) when the first electrical battery (4) is disconnected from said electrical load (6); said control unit (12) being further configured to, during the pulse discharge, control a power source (10) for supplying a first injection current to the first electrical battery (4) during a rest period when the first electrical battery (4) is in the rest state; said control unit (12) further configured to determine the voltage of the first electrical battery (4) during the rest state, and when the voltage does not meet a threshold value increase the duration of the rest period, until said threshold value is reached.

No. of Pages : 27 No. of Claims : 14

(12) PATENT APPLICATION PUBLICATION
(19) INDIA
(22) Date of filing of Application :22/12/2020

(21) Application No.202017055734 A
(43) Publication Date : 05/03/2021

(54) Title of the invention : NOVEL AMINE FUNCTIONALIZED POLYMERS AND METHODS OF PREPARATION

(51) International classification	:C08G0061080000, C08F0008320000, G01N0033543000, C08J0005180000, B32B0027320000
(31) Priority Document No	:62/675465
(32) Priority Date	:23/05/2018
(33) Name of priority country	:U.S.A.
(86) International Application No	:PCT/CA2019/050704
Filing Date	:23/05/2019
(87) International Publication No	:WO 2019/222852
(61) Patent of Addition to Application Number	:NA
Filing Date	:NA
(62) Divisional to Application Number	:NA
Filing Date	:NA

(71)**Name of Applicant :**
1)THE UNIVERSITY OF BRITISH COLUMBIA
Address of Applicant :#103-6190 Agronomy Road Vancouver, British Columbia V6T 1Z3 Canada
(72)**Name of Inventor :**
1)SCHAFER, Laurel L.
2)HATZIKIRIAKOS, Savvas G.
3)PERRY, Mitchell R.
4)GILMOUR, Damon J.
5)TOMKOVIC, Tanja

(57) Abstract :
This application pertains to amine-functionalized polymers by ring-opening metathesis (ROMP) of amine functionalized cycloalkenes.

No. of Pages : 82 No. of Claims : 76

(12) PATENT APPLICATION PUBLICATION
(19) INDIA
(22) Date of filing of Application :22/12/2020
(21) Application No.202017055741 A
(43) Publication Date : 05/03/2021

(54) Title of the invention : QUINOLINE DERIVATIVES AS INHIBITORS OF AXL/MER RTK AND CSF1R

(51) International classification	:C07D0401120000, C07D0401140000, A61P0035000000, A61K0031470900, A61K0031506000
(31) Priority Document No	:62/677902
(32) Priority Date	:30/05/2018
(33) Name of priority country	:U.S.A.
(86) International Application No	:PCT/EP2019/064214
Filing Date	:31/05/2019
(87) International Publication No	:WO 2019/229251
(61) Patent of Addition to Application Number	:NA
Filing Date	:NA
(62) Divisional to Application Number	:NA
Filing Date	:NA

(71)**Name of Applicant :**
1)QURIENT CO., LTD.
Address of Applicant :C-801, 242, Pangyo-ro, Bundang-gu Seongnam-si Gyeonggi-do 13487 Republic of Korea
(72)**Name of Inventor :**
1)NAM, Kiyean
2)KIM, Jaeseung
3)PARK, Dongsik
4)JEON, Yeejin
5)YANG, Yeong-In
6)KANG, Hwan Kyu

(57) Abstract :
The present invention relates to quinoline derivatives which are inhibitors for Axl/Mer RTK (receptor tyrosine kinase) and CSF1R (colony stimulating factor 1 receptor). These compounds are suitable for the treatment of disorders associated with, accompanied by, caused by or induced by Axl/Mer RTK and CSF1R, in particular a hyperfunction thereof. The compounds are suitable for the treatment of hyperproliferative disorders, such as cancer, particularly immune-suppressive cancer (such as those cancers with an immunosuppression of innate immunity in a tumor microenvironment (TME), refractory cancer and cancer metastases. They are also useful in the treatment of inflammatory diseases and/or neurodegenerative diseases.

No. of Pages : 137 No. of Claims : 14

(12) PATENT APPLICATION PUBLICATION
(19) INDIA
(22) Date of filing of Application :22/12/2020

(21) Application No.202017055759 A
(43) Publication Date : 05/03/2021

(54) Title of the invention : MULTI-COMPARTMENT BEVERAGE BOTTLE SYSTEM AND METHOD

(51) International classification	:B65D0081320000, B65D0001040000, B67C0003020000, B65D0051280000, A61C0005640000
(31) Priority Document No	:62/679578
(32) Priority Date	:01/06/2018
(33) Name of priority country	:U.S.A.
(86) International Application No	:PCT/US2019/035086
Filing Date	:31/05/2019
(87) International Publication No	:WO 2019/232499
(61) Patent of Addition to Application Number	:NA
Filing Date	:NA
(62) Divisional to Application Number	:NA
Filing Date	:NA

(71)**Name of Applicant :**
1)IN SPIRIT GROUP, INC.
Address of Applicant :P.O. Box 33114 Los Angeles, CA 90033 U.S.A.
(72)**Name of Inventor :**
1)WILLIS, Clifton
2)SCHWARTZ, Brandon
3)CISNEROS, Lawrence
4)LO, Feyats

(57) Abstract :
Embodiments of a multi-compartment beverage bottle system and methods of manufacturing the system are disclosed. First and second housing elements are in mutual engagement with one another to at least partially define a fluid vessel with a fluid cavity therein. The fluid cavity includes a first fluid compartment and a second fluid compartment. The first housing element is rotatable between a storage position and a mix position with respect to the second housing element. A shuttle element is disposed within the fluid cavity and axially actuatable along the main axis into and out of a seal position. Rotation of the first housing element toward the storage position actuates the shuttle element toward the seal position. Rotation of the first housing element toward the mix position actuates the shuttle element away from the seal position, thereby placing the first and second fluid compartments into fluid communication with one another for mixing.

No. of Pages : 30 No. of Claims : 28

(12) PATENT APPLICATION PUBLICATION
(21) Application No.202017055764 A
(19) INDIA
(22) Date of filing of Application :22/12/2020
(43) Publication Date : 05/03/2021

(54) Title of the invention : CROSS-CUTTING DEVICE AND METHOD FOR STABILIZING A CUTTING EDGE DURING CRUSH CUTTING

(51) International classification	:B26D0001400000, B26D0007180000, B29C0065000000, B26D0007020000, B29C0065080000
(31) Priority Document No	:10 2018 117 055.6
(32) Priority Date	:13/07/2018
(33) Name of priority country	:Germany
(86) International Application No	:PCT/EP2019/067716
Filing Date	:02/07/2019
(87) International Publication No	:WO 2020/011599
(61) Patent of Addition to Application Number	:NA
Filing Date	:NA
(62) Divisional to Application Number	:NA
Filing Date	:NA

(71)**Name of Applicant :**
1)BW PAPERSYSTEMS HAMBURG GMBH
Address of Applicant :Langenkamp 8 22880 Wedel Germany
(72)**Name of Inventor :**
1)BORG, Mathias
2)G„DTKE, Thorsten
3)HERPELL, Frank

(57) Abstract :
The invention relates to a cross-cutting device (1), particularly for cutting or cross-severing a running material web (2), preferably made of paper, cardboard, plastic and/or metal, into sheets (3), having a knife drum (5) as a rotatable cutting device, which is rotatable about a rotation axis extending crosswise to the material web (2) and the conveying direction thereof, wherein the knife drum (5) has at least one knife (8) extending in the axial direction of the knife drum (5) and rotating together with the knife drum (5), with a corresponding anvil drum (6), which is rotatable about a rotation axis extending crosswise to the material web (2) and the conveying direction thereof, wherein the anvil drum (6) is preferably arranged vertically under the knife drum (5), wherein a crush cut is carried out in a cutting line when a knife (8) of the knife drum (5) contacts the anvil drum (6), the knife drum (5) having at least one hold-down (9) on the circumference thereof before the knife (8) in the transport direction (10) of the material web (2). According to the invention, the hold-down (9) has a distance from the knife (8) and/or a radial extension such that the material web (2) contacts the hold-down (9) during crush cutting and is arched by the hold-down (9) in the direction toward the anvil drum (6).

No. of Pages : 12 No. of Claims : 11

(12) PATENT APPLICATION PUBLICATION
(21) Application No.202017055766 A
(19) INDIA
(22) Date of filing of Application :22/12/2020
(43) Publication Date : 05/03/2021

(54) Title of the invention : QUALITY MEASURING METHOD AND QUALITY MEASURING DEVICE FOR LONG SHEET MATERIAL

(51) International classification	:G01N0021355900, G01N0021356300, G01N0021860000, G01N0033340000, D21F0007060000
(31) Priority Document No	:NA
(32) Priority Date	:NA
(33) Name of priority country	:NA
(86) International Application No	:PCT/JP2018/020910
Filing Date	:31/05/2018
(87) International Publication No	:WO 2019/229919
(61) Patent of Addition to Application Number	:NA
Filing Date	:NA
(62) Divisional to Application Number	:NA
Filing Date	:NA

(71)**Name of Applicant :**
1)PSM INTERNATIONAL, INC.
Address of Applicant :16-33, Shimura 2-Chome, Itabashi-ku Tokyo 1740056 Japan
2)PROCEMEX OY
(72)**Name of Inventor :**
1)Hisataka SHITARA

(57) Abstract :
[Problem] To provide a quality measuring system that can measure the quality of a paper web by separating a flow direction component and a width direction component, that is of a non-scanning and non-filtering method which does not require a conventional basis weight sensor or ash meter using radiation or X-rays, that can be applied from small low-speed paper machines to large high-speed paper machines, and that involves a stable online accuracy confirmation method and correction method for long materials with high cost efficiency. [Solution] In a quality measurement method for a long sheet material W, cellulose fiber, moisture, ash, etc., of a paper web W are measured with area cameras 1102-1106 each having an infrared light receiving element and a light source 1100 having an infrared light emitting LED element. The performance confirmation of the infrared cameras 1102-1106 over the entire width and the correction of the measurement values are performed by using the consistency of the same point measurement values by the adjacent cameras in the overlap area and a comparison sample 1107 at the off-sheet positions provided at both ends.

No. of Pages : 45 No. of Claims : 6

(12) PATENT APPLICATION PUBLICATION
(21) Application No.202017055767 A
(19) INDIA
(22) Date of filing of Application :22/12/2020
(43) Publication Date : 05/03/2021

(54) Title of the invention : TEACHING DATA CREATING METHOD FOR ARTICULATED ROBOT, AND COORDINATE SYSTEM DETECTOR FOR TEACHING DATA CALIBRATION

(51) International classification	:G05B0019420000, B25J0009160000, G05B0019408000, B23K0037020000, B23K0037047000
(31) Priority Document No	:2018-107071
(32) Priority Date	:04/06/2018
(33) Name of priority country	:Japan
(86) International Application No	:PCT/JP2019/011448
Filing Date	:19/03/2019
(87) International Publication No	:WO 2019/235023
(61) Patent of Addition to Application Number	:NA
Filing Date	:NA
(62) Divisional to Application Number	:NA
Filing Date	:NA

(71)**Name of Applicant :**
1)KEYLEX CORPORATION
Address of Applicant :2-51, Minami Myoujin-Machi, Kaita-cho, Aki-gun, Hiroshima 7360055 Japan
(72)**Name of Inventor :**
1)HARADA Narumi
2)TAMURA Mizuho

(57) Abstract :
Actual coordinate system data (12) are acquired on the basis of a coordinate position at which a coordinate system creation tool (8) attached to a robot (3) approaches or comes into contact with a coordinate system creation target (75) of a coordinate system creation unit (7) attached to a workpiece positioning device (2). A virtual model is used to acquire simulated teaching data (10A) of a motion trajectory of a welding gun (6), and design coordinate system data (13) based on design coordinate values of the coordinate system creation target (75). The actual coordinate system data (12) are imported into an information processing system (11), after which coordinate positions of the simulated teaching data (10A) are moved in such a way that the design coordinate system data (13) coincide with the actual coordinate system data (12).

No. of Pages : 27 No. of Claims : 6

(12) PATENT APPLICATION PUBLICATION
(19) INDIA
(22) Date of filing of Application :22/12/2020
(21) Application No.202017055769 A
(43) Publication Date : 05/03/2021

(54) Title of the invention : WORK VEHICLE

(51) International classification	:A01B0069000000, B62D0001280000, B62D0001040000, B62D0015020000, B62D0006000000
(31) Priority Document No	:2018-120247
(32) Priority Date	:25/06/2018
(33) Name of priority country	:Japan
(86) International Application No	:PCT/JP2018/048061
Filing Date	:27/12/2018
(87) International Publication No	:WO 2020/003561
(61) Patent of Addition to Application Number	:NA
Filing Date	:NA
(62) Divisional to Application Number	:NA
Filing Date	:NA

(71)**Name of Applicant :**
1)KUBOTA CORPORATION
Address of Applicant :1-2-47, Shikitsuhigashi, Naniwa-ku, Osaka-shi, Osaka 5568601 Japan
(72)**Name of Inventor :**
1)MIYASHITA Shunsuke
2)KOBAYASHI Kumiko
3)KAWAI Misako
4)MORIOKA Yasuaki
5)NISHINO Kunihiko

(57) Abstract :
In order to make it possible for a driver to simply switch between starting and ending automatic steering, this work vehicle (1) is provided with: a steering wheel (30); a vehicle body (3) which can travel either with manual steering of the steering wheel (30) or with automatic steering of the steering wheel (30) on the basis of a travel reference line; a steering switch (52) which switches between starting and ending automatic steering; and a notification device (80) which notifies when the vehicle body (3) has approached a shift position shifted in the vehicle body width direction relative to a switch position, which is the position of the vehicle body when the steering switch (52) has been operated.

No. of Pages : 28 No. of Claims : 5

(12) PATENT APPLICATION PUBLICATION
(19) INDIA
(22) Date of filing of Application :22/12/2020
(21) Application No.202017055773 A
(43) Publication Date : 05/03/2021

(54) Title of the invention : AN ANTIMICROBIAL COMBINATION COMPOSITION COMPRISING GLYCEROL DERIVATIVES AND BICYCLIC COMPOUNDS

(51) International classification	:A61Q0019000000, A61K0045060000, A61Q0005020000, A61Q0017000000, A61K0008340000
(31) Priority Document No	:62/694442
(32) Priority Date	:05/07/2018
(33) Name of priority country	:U.S.A.
(86) International Application No	:PCT/EP2019/064952
Filing Date	:07/06/2019
(87) International Publication No	:WO 2020/007571
(61) Patent of Addition to Application Number	:NA
Filing Date	:NA
(62) Divisional to Application Number	:NA
Filing Date	:NA

(71)**Name of Applicant :**
1)CLARIANT INTERNATIONAL LTD
Address of Applicant :Rothausstrasse 61 4132 Muttenz 1 Switzerland
2)SACHEM EUROPE B.V.
(72)**Name of Inventor :**
1)FRICKE, Tom
2)ENGEL, Tim
3)JANSSEN, Paul

(57) Abstract :
The present disclosure relates to inter alia an antimicrobial combination composition comprising: (a) one or more glycerol derivatives; and (b) one or more bicyclic compounds. The antimicrobial combination composition can be used in cosmetic formulations or pharmaceutical formulations.

No. of Pages : 102 No. of Claims : 12

(12) PATENT APPLICATION PUBLICATION
(19) INDIA
(22) Date of filing of Application :22/12/2020
(21) Application No.202017055776 A
(43) Publication Date : 05/03/2021

(54) Title of the invention : BATTERY PACK AND VEHICLE INCLUDING BATTERY PACK

(51) International classification	:H01M0002100000, H01M0010625000, H01M0010613000, H01M0010655600, H01M0010655400
(31) Priority Document No	:10-2018-0112332
(32) Priority Date	:19/09/2018
(33) Name of priority country	:Republic of Korea
(86) International Application No	:PCT/KR2019/010870
Filing Date	:26/08/2019
(87) International Publication No	:WO 2020/060054
(61) Patent of Addition to Application Number	:NA
Filing Date	:NA
(62) Divisional to Application Number	:NA
Filing Date	:NA

(71)**Name of Applicant :**
1)LG CHEM, LTD.
Address of Applicant :128, Yeoui-daero, Yeongdeungpo-Gu, Seoul 07336 Republic of Korea
(72)**Name of Inventor :**
1)LEE, Su-Hang
2)CHOI, Kyu-Hyun
3)CHI, Ho-June
4)CHOI, Jee-Soon

(57) Abstract :
A battery pack according to one embodiment of the present invention comprises: a plurality of battery cells; a pack case having, arranged therein, accommodation spaces which are at least partially divided so as to accommodate the plurality of battery cells; a cooling mat which comes in contact with and is arranged on the upper surfaces of the plurality of battery cells in the pack case; and an air cushion arranged to be vertical with respect to the cooling mat, and mounted on an inner wall in the front/rear direction of the pack case.

No. of Pages : 13 No. of Claims : 11

(12) PATENT APPLICATION PUBLICATION
(19) INDIA
(22) Date of filing of Application :22/12/2020
(21) Application No.202017055777 A
(43) Publication Date : 05/03/2021

(54) Title of the invention : WORK VEHICLE

(51) International classification	:B62D0001280000, A01B0069000000, B62D0015020000, B62D0005040000, G05D0001020000
(31) Priority Document No	:2018-120243
(32) Priority Date	:25/06/2018
(33) Name of priority country	:Japan
(86) International Application No	:PCT/JP2018/048623
Filing Date	:29/12/2018
(87) International Publication No	:WO 2020/003563
(61) Patent of Addition to Application Number	:NA
Filing Date	:NA
(62) Divisional to Application Number	:NA
Filing Date	:NA

(71)**Name of Applicant :**
1)KUBOTA CORPORATION
Address of Applicant :1-2-47, Shikitsuhigashi, Naniwa-ku, Osaka-shi, Osaka 5568601 Japan
(72)**Name of Inventor :**
1)MIYASHITA Shunsuke
2)TAMBO Toru
3)IWAMI Kenichi
4)SUGA Hiroki
5)MORIOKA Yasuaki
6)NISHINO Kunihiko
7)KOBAYASHI Kumiko
8)KAWAI Misako

(57) Abstract :
In order to enable stable travel when switching from manual steering to automatic steering, this work vehicle (1) is provided with: a steering device (11) which has a steering wheel (30); a vehicle body (3) which can travel either with manual steering of the steering wheel (30) or with automatic steering of the steering wheel (30) on the basis of a travel reference line; and a control device (60B) which permits automatic steering on the basis of multiple steering angles of the steering device (11) when the vehicle body (3) has traveled a prescribed distance with manual steering.

No. of Pages : 51 No. of Claims : 25

(12) PATENT APPLICATION PUBLICATION
(19) INDIA
(22) Date of filing of Application :22/12/2020
(21) Application No.202017055789 A
(43) Publication Date : 05/03/2021

(54) Title of the invention : APPARATUS FOR IDENTIFYING AN ANIMAL

(51) International classification	:A01K0011000000, E06B0007320000, G06F0016583000, G08B0003000000, H04N0005232000
(31) Priority Document No	:A50485/2018
(32) Priority Date	:18/06/2018
(33) Name of priority country	:Austria
(86) International Application No	:PCT/EP2019/066083
Filing Date	:18/06/2019
(87) International Publication No	:WO 2019/243361
(61) Patent of Addition to Application Number	:NA
Filing Date	:NA
(62) Divisional to Application Number	:NA
Filing Date	:NA

(71)**Name of Applicant :**
1)RAMSEIER COATINGS AG
Address of Applicant :Moosstrasse 2 3113 Rubingen Switzerland
(72)**Name of Inventor :**
1)BERNDORFER, Wolfgang
2)HOFMANN, J¼rg

(57) Abstract :
The invention relates to an apparatus for identifying an animal, comprising an image capturing apparatus for capturing images of an animal in the vicinity of the apparatus, a database, in which database reference images of routine processes of the approach of the first animal are stored, wherein a measure of conformity between the images and the reference images and/or between features of the images and features of the reference images is determined, a drive for opening a door (4) being actuated and/or a signal unit for outputting a warning tone (3) or a signal unit for outputting an attracting noise (9) being activated and/or an output unit for outputting feed being activated by a control apparatus as a function of the measure of conformity.

No. of Pages : 9 No. of Claims : 6

(12) PATENT APPLICATION PUBLICATION
(19) INDIA
(22) Date of filing of Application :22/12/2020
(21) Application No.202017055793 A
(43) Publication Date : 05/03/2021

(54) Title of the invention : SINGLE CELL ENCAPSULATION VIA PICKERING EMULSION FOR BIO-PESTICIDES APPLICATION

(51) International classification	:H01L0021020000, A61K0008060000, G06F0040106000, H04N0021262000, B60L0003000000
(31) Priority Document No	:62/676984
(32) Priority Date	:27/05/2018
(33) Name of priority country	:U.S.A.
(86) International Application No	:PCT/IB2019/054370
Filing Date	:27/05/2019
(87) International Publication No	:WO 2019/229624
(61) Patent of Addition to Application Number	:NA
Filing Date	:NA
(62) Divisional to Application Number	:NA
Filing Date	:NA

(71)**Name of Applicant :**
1)THE STATE OF ISRAEL, MINISTRY OF AGRICULTURE & RURAL DEVELOPMENT AGRICULTURAL RESEARCH ORGANIZATION
Address of Applicant :Volcani Center P.O.B. 15159 7528809 Rishon Lezion Israel
(72)**Name of Inventor :**
1)MECHREZ, Guy
2)MENT, Dana

(57) Abstract :
This invention provides a systems and methods for single cell microencapsulation by eco-friendly oil-in-water (o/w) Pickering emulsion.

No. of Pages : 16 No. of Claims : 39

(12) PATENT APPLICATION PUBLICATION
(21) Application No.202017055799 A
(19) INDIA
(22) Date of filing of Application :22/12/2020
(43) Publication Date : 05/03/2021

(54) Title of the invention : VIBROACOUSTIC DEVICE AND METHOD FOR TREATING RESTRICTIVE PULMONARY DISEASES AND IMPROVING DRAINAGE FUNCTION OF LUNGS

(51) International classification	:A61H0001000000, A61K0009000000, A61B0005085000, A61H0023020000, G10K0015000000
(31) Priority Document No	:10201805107S
(32) Priority Date	:14/06/2018
(33) Name of priority country	:Singapore
(86) International Application No	:PCT/SG2018/050458
Filing Date	:07/09/2018
(87) International Publication No	:WO 2019/240665
(61) Patent of Addition to Application Number	:NA
Filing Date	:NA
(62) Divisional to Application Number	:NA
Filing Date	:NA

(71)**Name of Applicant :**
1)BARK TECHNOLOGY PTE. LTD.
Address of Applicant :10 ANSON ROAD, #26-04, INTERNATIONAL PLAZA, SINGAPORE (079903) Singapore
(72)**Name of Inventor :**
1)ANATOLIY SERGIYENKO

(57) Abstract :
The invention discloses a device and method for treating restrictive pulmonary diseases and improving the drainage function of a patient's lungs using vibroacoustic effects. The method uses vibroacoustic influence of a wide frequency range of between 20 Hz to 300 Hz to promote the opening of atelectatic alveoli, in order to safely and effectively treat patients with restrictive pulmonary diseases without subjecting them to dangerous lung recruitment manoeuvres. The vibroacoustic effects are applied to the surface of the patient's chest through handheld vibroacoustic transducers or a vibrowrap attached to the main unit. The vibroacoustic effects generated by the device can also be used to improve the drainage of fluids in the lungs and interstitial tissues, and thereby prevent hypostatic pneumonia and other complications in intubated patients.

No. of Pages : 18 No. of Claims : 7

(12) PATENT APPLICATION PUBLICATION
(19) INDIA
(22) Date of filing of Application :22/12/2020
(21) Application No.202017055800 A
(43) Publication Date : 05/03/2021

(54) Title of the invention : METHOD AND APPARATUS FOR GENERATING LYRICS, METHOD AND APPARATUS FOR DISPLAYING LYRICS, ELECTRONIC DEVICE, AND STORAGE MEDIUM

(51) International classification	:G06F0016000000, G06F0016330000, G10L0025510000, G11B0023400000, G10H0001360000
(31) Priority Document No	:201810513546.5
(32) Priority Date	:25/05/2018
(33) Name of priority country	:China
(86) International Application No	:PCT/CN2019/076815
Filing Date	:04/03/2019
(87) International Publication No	:WO 2019/223393
(61) Patent of Addition to Application Number	:NA
Filing Date	:NA
(62) Divisional to Application Number	:NA
Filing Date	:NA

(71)**Name of Applicant :**
1)TENCENT MUSIC ENTERTAINMENT TECHNOLOGY (SHENZHEN) CO., LTD.
Address of Applicant :Room 201, Building A, No.1 Qianwan 1st Rd Qianhai Shenzhen-Hong Kong Cooperative Zone Shenzhen, Guangdong 518000 China
(72)**Name of Inventor :**
1)FENG, Suiyu

(57) Abstract :
The present invention relates to the technical field of Internet, and provides a method and apparatus for generating lyrics, a method and apparatus for displaying lyrics, an electronic device, and a storage medium. The method comprises: acquiring lyrics of a target song; determining a character to be marked among a plurality of characters in the lyrics; querying, according to a word to which the character to be marked belongs and a preset query principle, the pronunciation of the character to be marked in the word, and determining the pronunciation of the character to be marked in the word as a corresponding pronunciation of the character to be marked in the target song; and generating a first lyric file of the target song according to the plurality of characters and the corresponding pronunciation of the character to be marked in the target song. Thus, the pronunciation can be displayed simultaneously during subsequent display of the lyrics, thereby ensuring that a user can sing the pronunciation of each character of the target song correctly. Moreover, when displaying the lyrics, the terminal can also mark the pronunciation above the corresponding character to be marked, so that the pronunciation is clear and distinct, thereby improving the accuracy of displaying the lyrics.

No. of Pages : 34 No. of Claims : 15

(12) PATENT APPLICATION PUBLICATION
(19) INDIA
(22) Date of filing of Application :22/12/2020

(21) Application No.202017055803 A
(43) Publication Date : 05/03/2021

(54) Title of the invention : SPRAY-DRIED ZIEGLER-NATTA (PRO)CATALYST SYSTEMS

(51) International classification	:C08F0210160000, C08F0004654000, C08F0010020000, C08F0110020000, C08F0010000000
(31) Priority Document No	:62/684343
(32) Priority Date	:13/06/2018
(33) Name of priority country	:U.S.A.
(86) International Application No	:PCT/US2019/035919
Filing Date	:07/06/2019
(87) International Publication No	:WO 2019/241044
(61) Patent of Addition to Application Number	:NA
Filing Date	:NA
(62) Divisional to Application Number	:NA
Filing Date	:NA

(71)**Name of Applicant :**
1)UNIVATION TECHNOLOGIES, LLC
Address of Applicant :5555 San Felipe, Suite 1950 Houston, TX 77056 U.S.A.
(72)**Name of Inventor :**
1)MUNRO, Ian M.
2)MARIOTT, Wesley R.
3)LESTER, C. Dale
4)BORSE, Nitin
5)AWE, Michael D.
6)CAO, Phuong A.
7)BEILHART, Jesse C.

(57) Abstract :
Methods of making spray-dried Ziegler-Natta (pro)catalyst systems containing titanium Ziegler-Natta (pro)catalysts, a hydrophobic silica carrier material, and tetrahydrofuran. The spray-dried Ziegler-Natta (pro)catalyst systems made by the method. Methods of polymerizing olefin (co)monomer(s) with the spray-dried Ziegler-Natta catalyst system to make polyolefin polymers, and the polyolefin polymers made thereby.

No. of Pages : 36 No. of Claims : 9

(12) PATENT APPLICATION PUBLICATION
(21) Application No.202017055817 A
(19) INDIA
(22) Date of filing of Application :22/12/2020
(43) Publication Date : 05/03/2021

(54) Title of the invention : SHARING VIRTUAL CONTENT IN A MIXED REALITY SCENE

(51) International classification	:G06T0019000000, G06F0003010000, G09G0005140000, H04L0029060000, G06F0003140000
(31) Priority Document No	:18305761.1
(32) Priority Date	:19/06/2018
(33) Name of priority country	:EPO
(86) International Application No	:PCT/EP2019/065521
Filing Date	:13/06/2019
(87) International Publication No	:WO 2019/243160
(61) Patent of Addition to Application Number	:NA
Filing Date	:NA
(62) Divisional to Application Number	:NA
Filing Date	:NA

(71)**Name of Applicant :**
1)INTERDIGITAL CE PATENT HOLDINGS
Address of Applicant :3 rue du Colonel Moll 75017 Paris France
(72)**Name of Inventor :**
1)BAILLARD, Caroline
2)FRADET, Matthieu
3)LAURENT, Anthony

(57) Abstract :
A method of sharing and a method of presenting virtual content in a mixed reality scene rendered on at least two user devices having different viewing position and/or orientation onto the mixed reality scene and corresponding apparatus are described.At a first user device,a user is enabled to select a virtual content to be shared and a second user device with whom the virtual content is to be shared. Information related to the virtual content to be shared is provided, wherein the provided information comprises the 3D position of the virtual content to be shared.The information is received by the second user device and the shared virtual content is rendered with regard to the viewing position and/or orientation of the second user device onto the mixed reality scene.

No. of Pages : 20 No. of Claims : 12

(12) PATENT APPLICATION PUBLICATION
(21) Application No.202017055820 A
(19) INDIA
(22) Date of filing of Application :22/12/2020
(43) Publication Date : 05/03/2021

(54) Title of the invention : POLYMERIC COMPOUNDS FOR CABLE COATINGS AND PROCESSES FOR PRODUCING SAME

(51) International classification	:H01B0003440000, C08L0023060000, C08L0023080000, C08K0005000000, C08K0005140000
(31) Priority Document No	:62/685331
(32) Priority Date	:15/06/2018
(33) Name of priority country	:U.S.A.
(86) International Application No	:PCT/US2019/033054
Filing Date	:20/05/2019
(87) International Publication No	:WO 2019/240913
(61) Patent of Addition to Application Number	:NA
Filing Date	:NA
(62) Divisional to Application Number	:NA
Filing Date	:NA

(71)**Name of Applicant :**
1)DOW GLOBAL TECHNOLOGIES LLC
Address of Applicant :2040 Dow Center Midland, MI 48674 U.S.A.
(72)**Name of Inventor :**
1)ESSEGHIR, Mohamed
2)SINGH, Anurima

(57) Abstract :
Coated conductors having a conductor at least partially surrounded by a polymeric composition. The polymeric composition contains a broad-molecular-weight-distribution high-density ethylene-based polymer and a narrow-molecular-weight-distribution linear-low-density ethylene-based polymer, and has a density of at least 0.95 g/cm3. Also disclosed are processes for preparing the polymeric composition and for making the coated conductors. Further disclosed are articles of manufacture containing the same.

No. of Pages : 16 No. of Claims : 10

(12) PATENT APPLICATION PUBLICATION
(19) INDIA
(22) Date of filing of Application :22/12/2020
(21) Application No.202017055830 A
(43) Publication Date : 05/03/2021

(54) Title of the invention : ROOF GREENING, WIND BREAKING AND VIBRATION SUPPRESSING APPARATUS, AND BUILDING

(51) International classification	:E04H0009020000, A01G0009020000, E04D0013000000, E04B0001980000, F16F0015040000
(31) Priority Document No	:201821493647.2
(32) Priority Date	:12/09/2018
(33) Name of priority country	:China
(86) International Application No	:PCT/CN2019/099881
Filing Date	:09/08/2019
(87) International Publication No	:WO 2020/052386
(61) Patent of Addition to Application Number	:NA
Filing Date	:NA
(62) Divisional to Application Number	:NA
Filing Date	:NA

(71)**Name of Applicant :**
1)LIU, Rongzhang
Address of Applicant :Room 501, Block D, No.10 Jia'an Road 40 Zone Baocheng, Bao'an District Shenzhen, Guangdong 518000 China
(72)**Name of Inventor :**
1)LIU, Rongzhang

(57) Abstract :
A roof greening, wind breaking and vibration suppressing apparatus, and a building. The roof greening, wind breaking and vibration suppressing apparatus comprises a plant container (11) and a buffering device (20). The buffering device (20) comprises elastic vibration isolation components (21) and damping buffer components (22). Soil (12), water (14), fertilizers (13), a plant, and the plant container (11) constitute an inertial body (10). The inertial body (10), the elastic vibration isolation components (21), and the damping buffer components (22) constitute a system mounted on a building. When an earthquake and strong wind strike, the inertial body (10) moves with respect to the building under the action of inertia, each elastic vibration isolation component (21) and each damping buffer component (22) absorb energy and achieve the effect of vibration isolation, passive energy dissipation or tuned vibration absorption, thereby enhancing the earthquake resistance and wind-breaking capability of the building, and expanding the conventional roof greening function.

No. of Pages : 20 No. of Claims : 15

CONTINUED TO PART- 2