पेटेंट कार्यालय
शासकीय जर्नल

OFFICIAL JOURNAL
OF
THE PATENT OFFICE

निर्गमन सं. 24/2021	शुक्रवार	दिनांक: 11/06/2021
ISSUE NO. 24/2021	FRIDAY	DATE: 11/06/2021

पेटेंट कार्यालय का एक प्रकाशन
PUBLICATION OF THE PATENT OFFICE

INTRODUCTION

In view of the recent amendment made in the Patents Act, 1970 by the Patents (Amendment) Act, 2005 effective from 01st January 2005, the Official Journal of The Patent Office is required to be published under the Statute. This Journal is being published on weekly basis on every Friday covering the various proceedings on Patents as required according to the provision of Section 145 of the Patents Act 1970. All the enquiries on this Official Journal and other information as required by the public should be addressed to the Controller General of Patents, Designs & Trade Marks. Suggestions and comments are requested from all quarters so that the content can be enriched.

(Shri Rajendra Ratnoo)
CONTROLLER GENERAL OF PATENTS, DESIGNS & TRADE MARKS

11th JUNE, 2021

CONTENTS

THE PATENT OFFICE
KOLKATA, 11/06/2021
Address of the Patent Offices/Jurisdictions
The following are addresses of all the Patent Offices located at different places having their Territorial Jurisdiction on a Zonal basis as shown below:-

1	Office of the Controller General of Patents, Designs & Trade Marks, Boudhik Sampada Bhavan, Near Antop Hill Post Office,S.M.Road,Antop Hill, Mumbai – 400 037 Phone: (91)(22) 24123311, Fax : (91)(22) 24123322 E-mail: cgpdtm@nic.in	4	The Patent Office, Government of India, Intellectual Property Rights Building, G.S.T. Road, Guindy, Chennai – 600 032. Phone: (91)(44) 2250 2081-84 Fax : (91)(44) 2250 2066 E-mail: chennai-patent@nic.in ❖ The States of Andhra Pradesh, Telangana, Karnataka, Kerala, Tamil Nadu and the Union Territories of Puducherry and Lakshadweep.
2	The Patent Office, Government of India, Boudhik Sampada Bhavan, Near Antop Hill Post Office,S.M.Road,Antop Hill, Mumbai – 400 037 Phone: (91)(22) 24137701 Fax: (91)(22) 24130387 E-mail: mumbai-patent@nic.in ❖ The States of Gujarat, Maharashtra, Madhya Pradesh, Goa and Chhattisgarh and the Union Territories of Daman and Diu & Dadra and Nagar Haveli	5	The Patent Office (Head Office), Government of India, Boudhik Sampada Bhavan, CP-2, Sector –V, Salt Lake City, Kolkata- 700 091 Phone: (91)(33) 2367 1943/44/45/46/87 Fax: (91)(33) 2367 1988 E-Mail: kolkata-patent@nic.in ❖ Rest of India
3	The Patent Office, Government of India, Boudhik Sampada Bhavan, Plot No. 32., Sector-14, Dwarka, New Delhi – 110075 Phone: (91)(11) 25300200 & 28032253 Fax: (91)(11) 28034301 & 28034302 E.mail: delhi-patent@nic.in ❖ The States of Haryana, Himachal Pradesh, Jammu and Kashmir, Punjab, Rajasthan, Uttar Pradesh, Uttaranchal, Delhi and the Union Territory of Chandigarh.		

Website: www.ipindia.nic.in
www.patentoffice.nic.in

All applications, notices, statements or other documents or any fees required by the Patents Act, 1970 and The Patents (Amendment) Act, 2005 or by the Patents (Amendment) Rules, 2006 will be received only at the appropriate offices of the Patent Office.

Fees: The Fees may either be paid in cash or may be sent by Bank Draft or Cheques payable to the Controller of Patents drawn on a scheduled Bank at the place where the appropriate office is situated.

पेटेंट कार्यालय

कोलकाता, दिनांक 11/06/2021

• कार्यालयों के क्षेत्राधिकार के पते

विभिन्न जगहों पर स्थित पेटेंट कार्यालय के पते आंचलिक आधार पर दर्शित उनके प्रादेशिक अधिकार क्षेत्र के साथ नीचे दिए गए है:-

1	कार्यालय : महानियंत्रक, एकस्व, अभिकल्प तथा व्यापार चिहन, एंटोप हिल डाकघर के समीप, एस. एम. रोड, एंटोप हिल, मुम्बई- 400 037, भारत, फोन: (91) (22) 24123311 फ़ैक्स: (91) (22) 24123322 ई. मेल: cgpdtm@nic.in	4	पेटेंट कार्यालय, भारत सरकार इंटेलेक्चुअल प्रॉपर्टी राइट्स बिल्डिंग, इंडस्ट्रियल इस्टेट एसआईडीसीओ आरएमडी गोडाउन एरिया एडजसेन्ट टु ईगल फ्लास्क, जी. एस. टी. रोड, गायन्डी चेन्नई - 600 032. फोन: (91)(44) 2250 2081-84 फ़ैक्स: (91)(44) 2250-2066 ई. मेल: chennai-patent@nic.in ❖ आन्ध्र प्रदेश, तेलंगाना, कर्नाटक, केरल, तमिलनाडु तथा पुडुचेरी राज्य क्षेत्र एवं संघ शासित क्षेत्र, लक्षदीप
2	पेटेंट कार्यालय, भारत सरकार बौद्धिक संपदा भवन, एंटोप हिल डाकघर के समीप, एस. एम. रोड, एंटोप हिल, मुम्बई- 400 037, फोन: (91) (22) 24137701 फ़ैक्स: (91) (22) 24130387 ई. मेल: Mumbai-patent@nic.in ❖ गुजरात, महाराष्ट्र, मध्य प्रदेश, गोवा तथा छत्तीसगढ़ राज्य क्षेत्र एवं संघ शासित क्षेत्र, दमन तथा दीव, दादर और नगर हवेली.	5	पेटेंट कार्यालय, भारत सरकार कोलकाता, (प्रधान कार्यालय) बौद्धिक संपदा भवन, सीपी-2, सेक्टर- V, साल्ट लेक सिटी, कोलकाता-700 091, भारत. फोन: (91)(33) 2367 1943/44/45/46/87 फ़ैक्स:/Fax: (91)(33) 2367 1988 ई. मेल: kolkata-patent@nic.in ❖ भारत का अवशेष क्षेत्र
3	पेटेंट कार्यालय, भारत सरकार बौद्धिक संपदा भवन, प्लॉट सं. 32, सेक्टर- 14, द्वारका, नई दिल्ली- 110 075. फोन: (91)(11) 25300200, 28032253 फ़ैक्स: (91)(11) 28034301, 28034302 ई. मेल: delhi-patent@nic.in हरियाणा, हिमाचल प्रदेश, जम्मू तथा कश्मीर, पंजाब,राजस्थान, उत्तर प्रदेश, दिल्ली तथा उत्तरांचल राज्य क्षेत्रों, एवं संघ शासित क्षेत्र चंडीगढ़		

वेबसाइट: http://www.ipindia.nic.in
www.patentoffice.nic.in

पेटेंट अधिनियम, 1970 तथा पेटेंट (संशोधन) अधिनियम, 2005 अथवा पेटेंट (संशोधन) नियम, 2006 द्वारा वांछित सभी आवेदन, सूचनाए, विवरण या अन्य दस्तावेज़ या कोई शुल्क पेटेंट कार्यालय के केवल उपयुक्त कार्यालय में स्वीकृत होंगे।

शुल्क: शुल्क या तो नगद रूप में या Controller of Patents के नाम में देय बैंक ड्राफ्ट या चेक के द्वारा भेजी जा सकती है जो उसी स्थान के किसी अनुसूचित बैंक में प्रदत्त हो जहाँ उपयुक्त कार्यालय स्थित है ।

SPECIAL NOTICE

18 Months publication as required under Section 11A of the Patents Act, 1970 as amended by the Patents (Amendment) Act, 2005.

Notice is hereby given that any person at any time before the grant of Patent may give representation by way of opposition to the Controller of Patents at appropriate office on the ground and in a manner specified under section 25(1) of the Patents (Amendment) Act, 2005 read with Rule 55 of the Patents (Amendment) Rules, 2006.

Notice is also given that if any interested person requests for copies of the complete specification, drawing and abstract of any application already published, the photocopy of the same can be supplied by the Patent Office as per the jurisdiction on payment of prescribed fees of Rs.8/- per page. If any further details are required to be obtained, the same can be provided by the respective Patent Offices on request.

(Shri Rajendra Ratnoo)
CONTROLLER GENERAL OF PATENTS, DESIGNS & TRADE MARKS

SPECIAL NOTICE

Under the new provision of the Patents Act, 1970 as amended by the Patents (Amendment) Act, 2005 and Rules there under, Publication of the matter relating to Patents in the Official Gazette of India Part III, Section 2 has been discontinued and instead The Official Journal of the Patent Office is being published containing all the activities of The Patent Office such as publication of all the patent applications after 18th months , grant of patents & all other information in respect of the proceedings as required under the provisions of the Patents (Amendment) Act, 2005 and Rules thereunder on weekly basis on every **Friday**.

The Journal is uploaded in the website every Friday. So Paper form and CD-ROM form of the Journal are discontinued from 01/01/2009.

SPECIAL NOTICE

Every effort is being taken to publish all the patent applications under section 11(A) of the Patents Act. However, if duplication of publication of any application is found, then earlier date of publication will be taken for the purpose of provisional protection for applicant and Patent Office will grant Patent not before six months from the date of second publication, provided that there is there is no third party representation.

Early Publication:

The following patent applications have been published under section 11A (2) of The Patents (Amendment) Act 2005 and rule 24A of The Patents (Amendment) Rules, 2006. Any person may file representation by way of opposition to the Controller of Patents at the appropriate office against the grant of the patent in the prescribed manner under section 25(1) of the Patents (Amendment) Act 2005 read with the rule 55 of The Patents (Amendment) Rules, 2006:

(12) PATENT APPLICATION PUBLICATION

(21) Application No.202011007304 A

(19) INDIA

(22) Date of filing of Application :20/02/2020

(43) Publication Date : 11/06/2021

(54) Title of the invention : AN ULTRAFAST RESISTIVE TYPE HUMIDITY SENSOR BASED ON NANOHYBRIDS'

(51) International classification	:G06F0003045000, G01N0027120000, G11C0013000000, G11C0011160000, H01F0027320000	(71)**Name of Applicant :** **1)INDIAN INSTITUTE OF TECHNOLOGY, ROORKEE** Address of Applicant :ROORKEE UTTARAKHAND-247667, INDIA Uttarakhand India
(31) Priority Document No	:NA	(72)**Name of Inventor :** **1)ATUL KUMAR**
(32) Priority Date	:NA	**2)PROF. ANIL KUMAR**
(33) Name of priority country	:NA	**3)PROF. G.D. VARMA**
(86) International Application No	:NA	
Filing Date	:NA	
(87) International Publication No	: NA	
(61) Patent of Addition to Application Number	:NA	
Filing Date	:NA	
(62) Divisional to Application Number	:NA	
Filing Date	:NA	

(57) Abstract :
The present invention, relates to ultrafast resistive type humidity sensor based on lanohybrids.' The process for making sensor, firstly prepared the silver nterdigilated electrodes (IDE) on pre-cleaned flexible tempered glass substrates)y using thermal evaporation in vacuum coating unit. The humidity sensor has the capability to record different breathing patterns as well as has the ability to detect >reathing at different rates.

No. of Pages : 26 No. of Claims : 3

(12) PATENT APPLICATION PUBLICATION
(21) Application No.202011010487 A
(19) INDIA
(22) Date of filing of Application :11/06/2020
(43) Publication Date : 11/06/2021

(54) Title of the invention : AN ANTICOUNTERFEIT ELEMENT FOR USE IN HIGH VALUE DOCUMENTS AND METHOD OF MANUFACTURING THEREOF

(51) International classification	:B42D0025290000, B42D0025387000, B42D0025355000, G07D0007120500, B42D0015000000	(71)**Name of Applicant :** **1)Raj Prehar** Address of Applicant :House No 10 , Sector 10 , Chandigarh - 160011, UT. India Chandigarh India **2)Manu Prehar** **3)Vijay Raja** **4)Vikram Kapadia**
(31) Priority Document No	:NA	
(32) Priority Date	:NA	
(33) Name of priority country	:NA	
(86) International Application No	:NA	
Filing Date	:NA	
(87) International Publication No	: NA	
(61) Patent of Addition to Application Number	:NA	
Filing Date	:NA	
(62) Divisional to Application Number	:NA	
Filing Date	:NA	

(72)**Name of Inventor :**
1)Raj Prehar
2)Manu Prehar
3)Vijay Raja
4)Vikram Kapadia

(57) Abstract :
The present invention relates to an anticounterfeit element (100) for use in documents of vale or high value documents along with device/equipment for detection of the same and a method of manufacturing the same The anticounterfeit element (100) comprising a substrate (102), a pigment material which exhibit a covert security feature and/or forensic features (104) disposed on the substrate (102), and further dispose of a forensic material with coating/ pigment material exhibit forensic security feature (106) as a unique spectral fingerprint over or aside of covert pigment material, which being detectable upon exciting with a radiation having a wavenumber in a predetermined range, the forensic security feature (106) is incorporated with the covert security feature (104). Further, an equipment (200) for determining genuineness of a document of value is disclosed. The anticounterfeit element (100) is reliable, and is identifiable using the equipment (200).

No. of Pages : 33 No. of Claims : 17

(12) PATENT APPLICATION PUBLICATION
(21) Application No.202011017922 A
(19) INDIA
(22) Date of filing of Application :27/07/2020
(43) Publication Date : 11/06/2021

(54) Title of the invention : COMPRESSION WITH ANNEALING SYSTEM FOR PRINTED FILM CONDUCTIVITY ENHANCEMENT

(51) International classification	:H01B0001240000, H01B0001220000, H05K0001090000, G01N0027120000, G06T0007730000	(71)**Name of Applicant :** **1)Sandeep Kumar** Address of Applicant :H. No. 1282/4, Rohtash Nagar, Rohtak (Haryana) Haryana India **2)Chandra Charu Tripathi**
(31) Priority Document No	:NA	(72)**Name of Inventor :**
(32) Priority Date	:NA	**1)Sandeep Kumar**
(33) Name of priority country	:NA	**2)Chandra Charu Tripathi**
(86) International Application No	:NA	**3)Kapil Bhatt**
Filing Date	:NA	
(87) International Publication No	: NA	
(61) Patent of Addition to Application Number	:NA	
Filing Date	:NA	
(62) Divisional to Application Number	:NA	
Filing Date	:NA	

(57) Abstract :
Printed electronics is rising exponentially due to its additive manufacturing nature that saves a lot of functional material. However, the final properties of the printed film depend upon ink constituents, printing technique, thickness, and uniformity of the layer, and post-processing steps such as annealing, sintering, compression, etc. Uniformity of the layer contributes a lot to the electrical conductivity of the printed layer and post-processing plays an important role to achieve it. There are numerous reports on the impact of post-processing techniques on the electrical conductivity of the printed layers and there are various systems commercially available to perform these tasks. But, there is hardly any system that can perform multiple post-processing techniques simultaneously. In the present system, two post-processing techniques can be executed simultaneously i.e. compression and annealing. It consists of two rollers rotating at a similar speed and the crescent-shaped hot plate covering the rollers to anneal the layers during compression. It can be operated manually and with a motor. When the printed layer passes through the nip gap between the rollers it experiences the shear force and it gets compressed as well as became uniform. If during compression the temperature has been kept higher than the boiling temperature of the ink solvent, it helps in the rearrangement of the microstructure and conductivity of the printed layer get enhanced. The nip gap between the rollers can be adjusted to process different thickness of substrate and printing using gear and/or hydraulic. The speed of compression cum annealing can be varied by varying rotational speed of rollers manually and/or using electric motor. The system will be very much useful in both sheet-to-sheet as well as roll-to-roll processes.

No. of Pages : 8 No. of Claims : 10

(12) PATENT APPLICATION PUBLICATION
(21) Application No.202011017923 A
(19) INDIA
(22) Date of filing of Application :27/07/2020
(43) Publication Date : 11/06/2021

(54) Title of the invention : GRINDING MEDIA SEPARATION SYSTEM FOR INK AND OTHER FORMULATIONS PROCESSED THROUGH BEAD MILLING

(51) International classification	:A61K0038000000, B01D0061140000, B02C0017160000, F26B0003120000, C04B0035486000	(71)**Name of Applicant :** **1)Chandra Charu Tripathi** Address of Applicant :University Institute of Engineering and Technology, Kurukshetra University Haryana India **2)Sandeep Kumar**
(31) Priority Document No	:NA	(72)**Name of Inventor :**
(32) Priority Date	:NA	**1)Chandra Charu Tripathi**
(33) Name of priority country	:NA	**2)Sandeep Kumar**
(86) International Application No	:NA	**3)Kapil Bhatt**
Filing Date	:NA	
(87) International Publication No	: NA	
(61) Patent of Addition to Application Number	:NA	
Filing Date	:NA	
(62) Divisional to Application Number	:NA	
Filing Date	:NA	

(57) Abstract :
Grinding media is the basic entity of the bead mill as it transfers the force from the mill to the slurry/suspension to break down the particles. After achieving the desired fineness of the particles or product is ready, grinding media is needed to be separated from the product. There are various commercial bead mills of large capacity and have the provision of grinding media separation. But, there are numerous laboratory as well as small production mills that don™t have any grinding media separation system. To separate the formulation from grinding media after processing from these systems manual and/or semimanual sieving has been used that results in material wastage as well as time-consuming. Whereas, in the proposed system, there is no material wastage and it will be a very fast process. The system consists of two drums; where the inner drum is perforated and rotates with the motor and the outer drum acts as a collector of the formulation. The mixer of grinding media and the final product is fed into the inner drum and it has been rotated at high speed. The product came out from the holes into the collector drum and the grinding media remains inside. There is a nozzle in the outer drum through which the product can be filled into containers. The rotational speed of the motor can be changed using motor controller. Therefore, the system will be quite efficient for use in the laboratory as well as on a commercial scale for a large portfolio of products™s viscosity.

No. of Pages : 7 No. of Claims : 11

(12) PATENT APPLICATION PUBLICATION
(21) Application No.202011018223 A
(19) INDIA
(22) Date of filing of Application :28/07/2020
(43) Publication Date : 11/06/2021

(54) Title of the invention : OPTICAL LIGHT ASSISTED MICRO GRIDLINE BED FOR MANUAL SCREEN PRINTING SYSTEM TO ACHIEVE BETTER REGISTRATION IN MULTILAYER PRINTING OF CIRCUITS AND DEVICES

(51) International classification	:G03F0009000000, B33Y0050020000, H05K0003040000, B41M0003000000, G06K0015100000
(31) Priority Document No	:NA
(32) Priority Date	:NA
(33) Name of priority country	:NA
(86) International Application No	:NA
Filing Date	:NA
(87) International Publication No	: NA
(61) Patent of Addition to Application Number	:NA
Filing Date	:NA
(62) Divisional to Application Number	:NA
Filing Date	:NA

(71)**Name of Applicant :**
1)Sandeep Kumar
Address of Applicant :H. No. 1282/4, Rohtash Nagar, Rohtak (Haryana) Haryana India
2)Chandra Charu Tripathi
(72)**Name of Inventor :**
1)Sandeep Kumar
2)Kapil Bhatt
3)Chandra Charu Tripathi

(57) Abstract :
Registration is the major issue in the case of multilayer printing of functional circuits and devices. To overcome the registration issue, the alignment of successive masks in printing should be so perfect that upon printing both layers overlap, perfectly. In the case of an automatic roll-to-roll printing system, highly sophisticated mask alignment techniques such as image processing are being used to achieve layers™ registration. While in the case of a sheet to sheet printing it is impossible to achieve good registration which limits the fabrication of multilayer device prototype with precise geometry at laboratory scale. Here, we propose a screen printing system to achieve a high level of registration for multilayer pattern printing on transparent as well as opaque substrates. It consists of an optical light-assisted screen printing bed along with a micro-scale gridline for the perfect alignment of mask and successive printed line. The system can be utilized to print both graphics and electronic devices with very high registration. The range of registration can be a few microns depending upon the gridline resolution.

No. of Pages : 8 No. of Claims : 11

(12) PATENT APPLICATION PUBLICATION
(21) Application No.202011019838 A
(19) INDIA
(22) Date of filing of Application :11/05/2020
(43) Publication Date : 11/06/2021

(54) Title of the invention : RAPID MILK ADULTERATION TESTING KIT AND METHODS THEREOF

(51) International classification	:H01M0010440000, G11B0017049000, G03G0015080000, A24D0003060000, B65D0006220000
(31) Priority Document No	:NA
(32) Priority Date	:NA
(33) Name of priority country	:NA
(86) International Application No	:NA
Filing Date	:NA
(87) International Publication No	: NA
(61) Patent of Addition to Application Number	:NA
Filing Date	:NA
(62) Divisional to Application Number	:NA
Filing Date	:NA

(71)**Name of Applicant :**
1)Rajasthan University of Veterinary & Animal Sciences
Address of Applicant :Vijay Bhawan Palace Complex, Veterinary University Road, Near Deen Dayal Upadhyay Circle, Bikaner 334001, Rajasthan, India Rajasthan India
(72)**Name of Inventor :**
1)SHARMA, Dr. Sanjita

(57) Abstract :
The present invention relates to a rapid milk-adulteration testing kit comprising of test solution(s) for detection of adulterant(s) in milk sample and method thereof. The kit provides test solutions for detection of even traces of detergent, soda, starch and urea. The test solution(s) of the kit has high shelf life of up to a period ranging from 21 months to 27.6 months and low limit of detection (LOD) ranging from =0.1% to =0.25%. The solution based kit employs test reagents in the test solution at high dilution. The kit is a cost effective and user friendly kit for qualitative detection of the presence of said at least one adulterant by definite visual colour change.

No. of Pages : 30 No. of Claims : 14

(12) PATENT APPLICATION PUBLICATION
(21) Application No.202011022187 A
(19) INDIA
(22) Date of filing of Application :27/05/2020
(43) Publication Date : 11/06/2021

(54) Title of the invention : A METHOD AND SYSTEM FOR MINIMIZING AND CONTROLLINGTHE CONCENTRATE IN A RO WATER PURIFICATION SYSTEM

(51) International classification	:C02F0001440000, C02F0001280000, C02F0001000000, C02F0001580000, C02F0009000000
(31) Priority Document No	:NA
(32) Priority Date	:NA
(33) Name of priority country	:NA
(86) International Application No	:NA
Filing Date	:NA
(87) International Publication No	: NA
(61) Patent of Addition to Application Number	:NA
Filing Date	:NA
(62) Divisional to Application Number	:NA
Filing Date	:NA

(71)**Name of Applicant :**
1)Somany Home Innovation Limited
Address of Applicant :Plot No. 68, Near GSK - R&D, Echelon Institutional area Sector -32 Gurgaon Haryana,122001 _ India Haryana India
(72)**Name of Inventor :**
1)Avnish K Verma
2)Nikhil Maheshwari

(57) Abstract :
The present invention relates to a system and method for minimizing the concentrate in a RO water purification system leading to less or zero discharge. More particularly, the present invention relates to a water purifier employing multiple separation mechanism and controllers for monitoring the re-treatment and re-utilization of separated liquid thereby controlling the amount of concentrate.

No. of Pages : 11 No. of Claims : 5

(12) PATENT APPLICATION PUBLICATION
(21) Application No.202011032257 A
(19) INDIA
(22) Date of filing of Application :28/07/2020
(43) Publication Date : 11/06/2021

(54) Title of the invention : FACE MASK WITH NATURAL ANTI-MICROBIAL FINISH

(51) International classification	:A41D0013110000, A01N0059160000, A61K0008970000, A61Q0019000000, A62B0018080000
(31) Priority Document No	:NA
(32) Priority Date	:NA
(33) Name of priority country	:NA
(86) International Application No	:NA
Filing Date	:NA
(87) International Publication No	: NA
(61) Patent of Addition to Application Number	:NA
Filing Date	:NA
(62) Divisional to Application Number	:NA
Filing Date	:NA

(71)**Name of Applicant :**
1)KEEO LIFE PVT. LTD.
Address of Applicant :M-6 OFFICE, BALRAM HOUSE, KARAMPURA, DELHI, NORTH WEST, DELHI 110015, INDIA Delhi India
(72)**Name of Inventor :**
1)AMIT JAIN
2)SAMYAK JAIN

(57) Abstract :
The present disclosure relates to the field of face mask with a naturally occurring anti-microbial finish. Anti-microbial agent like curcumin and aloe vera are safe even if they are ingested in human body compared to commercially available chemicals. The Face mask is made of multilayer system with the outer layer (108) providing water repellent property, second layer (109) providing the particle filtration property, third layer (110)which is cotton rich, treated with natural anti-microbial agent, fourth layer (111) treated with additional anti-microbial or fragrance finish and a inner layer (112) providing moisturizing and soothing effect to skin, being treated with aloe vera.

No. of Pages : 13 No. of Claims : 8

(12) PATENT APPLICATION PUBLICATION
(19) INDIA
(22) Date of filing of Application :15/04/2021
(21) Application No.202111017619 A
(43) Publication Date : 11/06/2021

(54) Title of the invention : GRASPING DEVICE FOR A COOKWARE

(51) International classification	:A61F0002680000, H02G0003080000, H02G0003140000, A61B0017221000, B25B0005120000	(71)**Name of Applicant :** **1)Ajay Kumar Goyal** Address of Applicant :7675 Singh Sabha Road Sai Apartment Flat No. 4 Shakti Nagar, Near Amba Cinema, Delhi-110007, India (IN) Delhi India
(31) Priority Document No	:NA	(72)**Name of Inventor :** **1)Ajay Kumar Goyal**
(32) Priority Date	:NA	
(33) Name of priority country	:NA	
(86) International Application No	:NA	
Filing Date	:NA	
(87) International Publication No	: NA	
(61) Patent of Addition to Application Number	:NA	
Filing Date	:NA	
(62) Divisional to Application Number	:NA	
Filing Date	:NA	

(57) Abstract :
The present invention provides a grasping assembly (1000) for an article which involves screwless connection and locking between the components of the grasping assembly (1000). The grasping assembly (1000) comprises a holding member (200) and a connecting mechanism (400) having a locking unit (410) and a clamp (420). The clamp (420) is operationally coupled with the locking unit (410) such that a plurality of protruding elements (412) of the locking unit (410) penetrate through a plurality of openings (422) of the clamp (420). Further, the connecting mechanism (400) securely engages with the holding member (200) upon snap-fitting. A locking arrangement (2000) of an article and a method of engaging a plurality of grasping assemblies (1000) with an article are also disclosed.

No. of Pages : 33 No. of Claims : 12

(12) PATENT APPLICATION PUBLICATION
(21) Application No.202111018129 A
(19) INDIA
(22) Date of filing of Application :20/04/2021
(43) Publication Date : 11/06/2021

(54) Title of the invention : A PESTICIDE SPRAYING FLYING DEVICE FOR OPTIMIZING THE QUANTITY SPRAYED AND MAKING IT TIME EFFICIENT

(51) International classification	:A01M0007000000, G01R0031280000, B64D0001180000, A61K0009160000, C23C0004180000
(31) Priority Document No	:NA
(32) Priority Date	:NA
(33) Name of priority country	:NA
(86) International Application No	:NA
Filing Date	:NA
(87) International Publication No	: NA
(61) Patent of Addition to Application Number	:NA
Filing Date	:NA
(62) Divisional to Application Number	:NA
Filing Date	:NA

(71)**Name of Applicant :**
1)INDIAN INSTITUTE OF INFORMATION TECHNOLOGY, ALLAHABAD
Address of Applicant :IIT Rd, Near Boys Hostel, Devghat, Jhalwa, Prayagraj, Uttar Pradesh, India-211015 Uttar Pradesh India
(72)**Name of Inventor :**
1)Paawan Kumar
2)Shefali Vinod Remteke
3)Dr. Suneel Yadav
4)Dr. Pritish Kumar

(57) Abstract :
This invention describes a drone based farming device which uses fewer amounts of pesticides in comparison with the traditional manned method of spraying using knapsack sprayers. It ensures environmental protection and management into the farming sector so that soil degradation and water pollution can be avoided. It has a 6 propeller system with an atomized sprayer to spray only the require quantity of pesticide. The drone has two control modes including manual and autonomous and the spraying system operates using the position data from GPS system to automatically return to base position when the tank becomes empty for refill. This addresses critical need of safety of the farmers from the harmful effects of crop protection chemicals and thus the pesticide spraying drone for smart farming which is an automated solution can help improve farmer's health.

No. of Pages : 24 No. of Claims : 9

(12) PATENT APPLICATION PUBLICATION
(19) INDIA
(22) Date of filing of Application :04/05/2021
(21) Application No.202111020342 A
(43) Publication Date : 11/06/2021

(54) Title of the invention : A MOUTH OPENING DEVICE •

(51) International classification	:A61M0016000000, A61B0001240000, A61Q0011000000, A61D0015000000, A61C0017020000
(31) Priority Document No	:NA
(32) Priority Date	:NA
(33) Name of priority country	:NA
(86) International Application No	:NA
Filing Date	:NA
(87) International Publication No	: NA
(61) Patent of Addition to Application Number	:NA
Filing Date	:NA
(62) Divisional to Application Number	:NA
Filing Date	:NA

(71)**Name of Applicant :**
1)INNOVATIVE CANCER CARE AND REHABILITATION PVT LTD.
Address of Applicant :FF-02 Omaxe Green Valley Plaza, Sector 42, Faridabad-121003, Haryana, India. Haryana India
(72)**Name of Inventor :**
1)Dr. Pawan Gupta
2)Mr. Rishabh Agrawal
3)Mrs. Shruti Agrawal

(57) Abstract :
The present invention relates to an auxiliary mouth opening device for oral care. Said device comprises: a lower Jaw plate (1), an upper Jaw Plate (2), a screw (3), a rivet (4), a measuring scale (5), an arrow (6). The device facilitates oral care in trismus patients. It effectively opens up the mouth and estimates the degree of mouth opening and does not cause injuries to the patients while in use.

No. of Pages : 16 No. of Claims : 3

(12) PATENT APPLICATION PUBLICATION
(21) Application No.202111020599 A
(19) INDIA
(22) Date of filing of Application :06/05/2021
(43) Publication Date : 11/06/2021

(54) Title of the invention : DEEP LEARNING PROCESS MODEL FOR EFFICIENT ASSESSMENT AND PREDICTION OF LEARNERS EMOTIONS IN COLLABORATIVE LEARNING ENVIRONMENT

(51) International classification	:G06N0003040000, G06N0003080000, G05B0013040000, G06K0009620000, G06N0020000000
(31) Priority Document No	:NA
(32) Priority Date	:NA
(33) Name of priority country	:NA
(86) International Application No	:NA
Filing Date	:NA
(87) International Publication No	: NA
(61) Patent of Addition to Application Number	:NA
Filing Date	:NA
(62) Divisional to Application Number	:NA
Filing Date	:NA

(71)**Name of Applicant :**
1)Dr. Srikanta Kumar Mohapatra
Address of Applicant :Associate Professor, Department of Computer Science & Engineering, Chitkara University Institute of Engineering and Technology, Chitkata University, Punjab, India-140401 Punjab India
2)DR. Bidush Kumar Sahoo
3)Dr. Premananda Sahu
4)Mr. Santosh Kumar Sharma
5)Dr. Ankita
6)Dr. Sukant Kishoro Bisoy
(72)**Name of Inventor :**
1)Dr. Srikanta Kumar Mohapatra
2)DR. Bidush Kumar Sahoo
3)Dr. Premananda Sahu
4)Mr. Santosh Kumar Sharma
5)Dr. Ankita
6)Dr. Sukant Kishoro Bisoy

(57) Abstract :
Assessment of a learner's in an online mode using Visibility on Video model(VOV). Visibility on Video (VOV) model is a deep learning process model which predicts the learner's emotions and analyses them whether they are interested or not interested in a topic, or they want more explanation about it. Based on the analysis of the learners the teacher or a resource person can change their mode of teaching or teaching aids in a more interactive way. VOV model will predict their emotions using a laptop camera or mobile phone camera and aggregate the information about the learners to the resource person or a teacher about their opinion about the topic without saying anything by the learners. Based on the assessment send by the VOV model the teacher or resource person can change their mode of teaching into interactive one or explain the topic by means of animation or any other videos. VOV model predicts the emotions of the majority learner and suggests the resource person or teacher to change the mode of teaching.

No. of Pages : 9 No. of Claims : 5

(12) PATENT APPLICATION PUBLICATION
(21) Application No.202111021170 A
(19) INDIA
(22) Date of filing of Application :10/05/2021
(43) Publication Date : 11/06/2021

(54) Title of the invention : A PROCESS FOR PREPARING SACCHARIN MONOPHASIC LIQUID FORMULATION TO MITIGATE BEHAVIORAL ABNORMALITIES IN DIABETES

(51) International classification	:A61K0009000000, C07D0275060000, G16B0045000000, B01J0037080000, C07K0005080000
(31) Priority Document No	:NA
(32) Priority Date	:NA
(33) Name of priority country	:NA
(86) International Application No	:NA
Filing Date	:NA
(87) International Publication No	: NA
(61) Patent of Addition to Application Number	:NA
Filing Date	:NA
(62) Divisional to Application Number	:NA
Filing Date	:NA

(71)**Name of Applicant :**
1)Dr. Manish Kumar
Address of Applicant :H. No. 568, Shiv Partap Nagar, Ambala Cantt, Haryana 133001 India Haryana India
2)Dr. Sushma Gupta
3)Monica Chail
(72)**Name of Inventor :**
1)Dr. Manish Kumar
2)Dr. Sushma Gupta
3)Monica Chail

(57) Abstract :
The present disclosure relates to a process for preparing saccharin monophasic liquid formulation to mitigate behavioral abnormalities in diabetes. The process facilitates in preparation of saccharin monophasic liquid formulation and elucidate the effects of SMLF exposures on behavioural anomalies in non-insulin dependent diabetes mellitus using mice. The process facilitates in evaluating withdrawal effects of SMLF in relation to psychiatric disorders in diabetes. The SMLF containing 10% w/v saccharin sodium is prepared using various excipients and for characterization colour, odour, taste and pH are checked. Streptozotocin is administered in mice on day 1 to induce type-2 diabetes and blood glucose level is determined on day 5. From day 6, the mice are exposed to a two-bottle water and saccharin monophasic oral liquid formulation choice paradigm and are subjected to TST, FST and EPM tests. Plasma 17-deoxycortisol and whole brain monoamine oxidase activity, reduced glutathione and malondialdehyde content are determined.

No. of Pages : 28 No. of Claims : 10

(12) PATENT APPLICATION PUBLICATION
(19) INDIA
(22) Date of filing of Application :13/05/2021
(21) Application No.202111021664 A
(43) Publication Date : 11/06/2021

(54) Title of the invention : AN APPARATUS FOR AUTOMATIC ACCIDENT DETECTION AND PROCEDURAL POST-ACCIDENTAL INCIDENT CONTROLLING METHOD THEREOF

(51) International classification	:G06F0001160000, G01S0017931000, H02H0003040000, G01S0007481000, H04W0004020000
(31) Priority Document No	:NA
(32) Priority Date	:NA
(33) Name of priority country	:NA
(86) International Application No	:NA
Filing Date	:NA
(87) International Publication No	: NA
(61) Patent of Addition to Application Number	:NA
Filing Date	:NA
(62) Divisional to Application Number	:NA
Filing Date	:NA

(71)**Name of Applicant :**
1)Ms. Indu
Address of Applicant :Research Scholar, School of Information and Communication Technology, Gautam Buddha University, Greater Noida -201310, Uttar Pradesh, India Uttar Pradesh India
2)Dr. Sandhya Tarar
3)Nishant Poras
4)Mayank Tyagi
5)Ms. Namisha Bhasin
6)Prof. (Dr.) Vipin Kumar Tyagi
7)Purnendu Shekhar Pandey
8)Dr. Mayank Singh
(72)**Name of Inventor :**
1)Ms. Indu
2)Dr. Sandhya Tarar
3)Nishant Poras
4)Mayank Tyagi
5)Ms. Namisha Bhasin
6)Prof. (Dr.) Vipin Kumar Tyagi
7)Purnendu Shekhar Pandey
8)Dr. Mayank Singh

(57) Abstract :
The present invention relates to the apparatus for automatic accident detection and procedural post-accidental incident controlling method thereof. The apparatus for automatic accident detection and procedural post-accidental incident control comprised of an input acquisition module, an output presenting module, a database module and a computer readable module. The input acquisition module operable to receive information indicative of current condition and cause of current condition in a preferred area which is further comprised of a polycarbonate enclosure inside of which a sound sensor, a LiDAR sensor and a battery unit are placed. The sound sensor further comprised of at least one microphone, an amplifier, a peak detector, at least one sound microcontroller and a first buffer and a first transceiver. The LiDAR sensor further comprised of at least one light transmitter, at least one light receiver, a light microcontroller, a second buffer and at least one second transceiver.

No. of Pages : 24 No. of Claims : 7

(12) PATENT APPLICATION PUBLICATION
(21) Application No.202111022490 A
(19) INDIA
(22) Date of filing of Application :20/05/2021
(43) Publication Date : 11/06/2021

(54) Title of the invention : IOT BASED SMART HEALTHCARE SOLUTION FOR PREDICTING SEVERITY PROGNOSIS IN HEART PATIENTS USING MACHINE LEARNING.

(51) International classification	:A61B0005000000, G16H0010600000, G06N0020000000, G06N0003080000, G06N0003040000
(31) Priority Document No	:NA
(32) Priority Date	:NA
(33) Name of priority country	:NA
(86) International Application No	:NA
Filing Date	:NA
(87) International Publication No	: NA
(61) Patent of Addition to Application Number	:NA
Filing Date	:NA
(62) Divisional to Application Number	:NA
Filing Date	:NA

(71)**Name of Applicant :**
1)Dr. Laxman Singh (Associate Professor)
Address of Applicant :(Principal Investigator) This patent is part of Research project sanctioned by Dr. APJ Abdul Kalam (Govt.) University, Lucknow, U.P, India. under Visvesvaraya Research Promotion Scheme vide Letter No. Dr. APJAKTU/Dean-PGSR/VRP , Address 3: Village-Dakora, P.O-Marrolli, The-Hodal, Distt-Palwal, Haryana-121106, India, Email: laxman.mehlawat2@gmail.comS-2020/05751 Uttar Pradesh India
2)Mr. Sover Singh Bisht (Assistant Professor)
3)Dr. Mahipal Singh Choudhry (Professor)
4)Dr. Altaf Alam (Research Fellow)
5)Dr. Gayatri Sakya (Assistant Professor)
6)Dr. Sapna Sinha (Associate Professor)
7)Rajeev Kumar (Assistant Professor)
(72)**Name of Inventor :**
1)Dr. Laxman Singh (Associate Professor)
2)Mr. Sover Singh Bisht (Assistant Professor)
3)Dr. Mahipal Singh Choudhry (Professor)
4)Dr. Altaf Alam (Research Fellow)
5)Dr. Gayatri Sakya (Assistant Professor)
6)Dr. Sapna Sinha (Associate Professor)
7)Rajeev Kumar (Assistant Professor)

(57) Abstract :
Our Invention IOT based Smart Healthcare Solution for Predicting Severity Prognosis in Heart Patients using Machine Learning is a heart disease is the leading cause of death worldwide and Predicting heart disease is a very complex task since it requires experience along with advanced and intelligent knowledge. The invention is a Internet of Things (IoT) technology has adopted in healthcare systems to collect sensor values for heart disease diagnosis and prediction and also a more researchers have focused on the diagnosis of heart disease yet the accuracy of the diagnosis results is low. The invented IoT framework is to evaluate heart disease +99% accurately using a machine learning programming-MLP and the smartwatch and heart monitor device that is attached to the patient monitors the blood pressure and electrocardiogram (ECG). The performance of the system is analyzed by comparing the MLP with existing deep learning neural networks and logistic regression and also the results demonstrate that the MLP based heart disease. The invented system undertakes training as well as testing and the data from the UCI machine learning repository, Framingham, and Public Health Dataset were utilized for training and evaluating the disease. The UCI repository has Cleveland, Hungary, Switzerland, and the VA-Long Beach databases and also selected the Cleveland database as it has +567 records which are most complete.

No. of Pages : 18 No. of Claims : 5

(12) PATENT APPLICATION PUBLICATION
(21) Application No.202111022492 A
(19) INDIA
(22) Date of filing of Application :20/05/2021
(43) Publication Date : 11/06/2021

(54) Title of the invention : LOW COST MANGALORE TILE MANUFACTURE USING WASTE PLASTIC AND CONCRETE.

(51) International classification	:B29B0017000000, B29K0105260000, B29L0031100000, E04F0015100000, B29B0017020000
(31) Priority Document No	:NA
(32) Priority Date	:NA
(33) Name of priority country	:NA
(86) International Application No	:NA
Filing Date	:NA
(87) International Publication No	: NA
(61) Patent of Addition to Application Number	:NA
Filing Date	:NA
(62) Divisional to Application Number	:NA
Filing Date	:NA

(71)**Name of Applicant :**
1)Prof.(Dr.) Pawan Kumar Bharti (Vice-Chancellor)
Address of Applicant :Shri Venkateshwara University, Gajraula (Uttar Pradesh) India -244236 E-Mail: padutt@gmail.com, akumarmuit@gmail.com Mobile No:-+918595067540, +918409588012 Uttar Pradesh India
2)Dr. Vaneet Kumar (Associate Professor)
3)Naveen Thakur (Professor)
4)Nikesh Thakur
5)Dr. Mohinder Pal Garg (Associate Professor)
6)Dr. Vineet Bajaj (Professor and Head)
7)Ajay Guleria (Research Scholar)
8)Dr Barjinder Kaur (Assistant Professor)
9)Dr. Dinesh Pathak (Associate Professor)
10)Dr. Saruchi (Associate Professor)
11)Diksha Bhatt (Research Scholar)
(72)**Name of Inventor :**
1)Prof.(Dr.) Pawan Kumar Bharti (Vice-Chancellor)
2)Dr. Vaneet Kumar (Associate Professor)
3)Naveen Thakur (Professor)
4)Nikesh Thakur
5)Dr. Mohinder Pal Garg (Associate Professor)
6)Dr. Vineet Bajaj (Professor and Head)
7)Ajay Guleria (Research Scholar)
8)Dr Barjinder Kaur (Assistant Professor)
9)Dr. Dinesh Pathak (Associate Professor)
10)Dr. Saruchi (Associate Professor)
11)Diksha Bhatt (Research Scholar)

(57) Abstract :
The invention is to solid waste is a major problem for India. It is important to take immediate action on how to the intelligent way of reducing plastic waste as a strategy in solid waste management, especially from inorganic materials since it is essential to the welfare of society and the environment. In India there are tons of plastics disposal around the Indian all state and until now has not yet optimized discover or recycle for engineering usage and the quantities of disposable plastics are growing day by day and it takes hundreds of years for plastics material to degrade. Our Invention Low-Cost Mangalore Tile Manufacture using Waste Plastic and Concrete is a manufacturing process and a related product constituted of a Mangalore tile in waste plastic material. following process: 1: crushing a thermoplastic material of recovery. 2: injecting quality plastic material into a mold with a primary punch. 3: The matrix integrated to enable the develop of the first layer of the tile between them, rotating the mold to reverse the reciprocal position of the matrix. 4: the primary punch, replacing the primary punch with a secondary punch to mark out, in its association with the matrix, between the first layer, supported by the matrix. 5 : The second layer of a plastic material arranged inside the Mangalore tile. Advanced Scientific research now has used the mapped recycling approach by producing useful substances from the recycled waste plastic as a second, third strategy to replace natural substance and the reuse of plastic wastes plays an important role in sustainable solid waste management to help save natural resources that are not replenished, it decreases the pollution of the environment and it also helps to save.

No. of Pages : 14 No. of Claims : 8

(12) PATENT APPLICATION PUBLICATION
(21) Application No.202111023026 A
(19) INDIA
(22) Date of filing of Application :24/05/2021
(43) Publication Date : 11/06/2021

(54) Title of the invention : SOLAR AIR HEATER FLAT PLATE ABSORBER INTEGRATED THERMO-ELECTRIC GENERATOR WITH LATENT HEAT STORAGE MATERIAL

(51) International classification	:F24F0005000000, F24S0010500000, F24S0010000000, H01L0035300000, F24S0080500000	(71)**Name of Applicant :** **1)Eswaramoorthy Muthusamy** Address of Applicant :Professor School of Mechanical Engg Shri Mata vaishno Devi University Katra Jammu & Kashmir India
(31) Priority Document No	:NA	(72)**Name of Inventor :** **1)Eswaramoorthy Muthusamy**
(32) Priority Date	:NA	
(33) Name of priority country	:NA	
(86) International Application No	:NA	
Filing Date	:NA	
(87) International Publication No	: NA	
(61) Patent of Addition to Application Number	:NA	
Filing Date	:NA	
(62) Divisional to Application Number	:NA	
Filing Date	:NA	

(57) Abstract :
The present invention provides an innovative design of solar air heater flat plate absorber having an integrated bismuth telluride based thermoelectric generator with latent heat storage materials in rectangular based metal container at longitudinal position. The generated electricity from thermoelectric generator helps to drives the blower to maintain the mass flow rate of air in air heating process using solar radiation. It comprises flat plate absorber, thermoelectric generator, latent heat storage materials, transparent glass sheet, and air inlet and outlet section. The present innovation offers an efficient and self-driven method for mass flow rate of air utilizing solar radiant energy by eliminating external supply of electricity to drive the blower. The positioning and integration of thermoelectric generator and latent heat storage materials an excellent thermal design. The present invention helps to an enhancement of heat transfer mechanism by increase in mass flow rate of air, higher value of heat transfer co-efficient and heat storage for additional time to the operation compared to conventional flat solar air heater.

No. of Pages : 2 No. of Claims : 5

(12) PATENT APPLICATION PUBLICATION
(21) Application No.202111023181 A
(19) INDIA
(22) Date of filing of Application :24/05/2021
(43) Publication Date : 11/06/2021

(54) Title of the invention : A SYSTEM AND METHOD FOR DEMEANOR BASED TRUST MEASUREMENT AND JOB PLACEMENT IN FOG COMPUTING MILIEU

(51) International classification	:G06F0009500000, H04L0029080000, G06Q0010100000, G06F0016245000, G06Q0010000000	(71)**Name of Applicant :**
(31) Priority Document No	:NA	**1)Richa Verma**
(32) Priority Date	:NA	Address of Applicant :Department of Computer Science, Babasaheb Bhimrao Ambedkar University, (A Central University), Raebareli Road, Lucknow, Uttar Pradesh India
(33) Name of priority country	:NA	**2)Jasleen Kaur**
(86) International Application No	:NA	**3)Dr. Shalini Chandra**
Filing Date	:NA	(72)**Name of Inventor :**
(87) International Publication No	: NA	**1)Richa Verma**
(61) Patent of Addition to Application Number	:NA	**2)Jasleen Kaur**
Filing Date	:NA	**3)Dr. Shalini Chandra**
(62) Divisional to Application Number	:NA	
Filing Date	:NA	

(57) Abstract :
A system (100) for demeanour based trust measurement and job placement in fog computing milieu comprises one or more ground level devices (106) configured to submit corresponding job requests having respective resource requirements, one or more fog broker (102) configured to receive the one or more job request from the one or more ground level devices (106), contain the resource requirements in a matrix determining type and quantity of the resource requirements for each ground level device (106) and broadcast the job requests for with the resource requirements from the matrix, one or more fog nodes (104), having respective capacity plans, registered in the one or more fog broker (102). Each fog node (104) having a trust value. The one or more fog broker configured to place the job request with corresponding resource requirement to the fog node (104) with a highest trust value.

No. of Pages : 31 No. of Claims : 14

(12) PATENT APPLICATION PUBLICATION
(21) Application No.202111023384 A
(19) INDIA
(22) Date of filing of Application :26/05/2021
(43) Publication Date : 11/06/2021

(54) Title of the invention : OXYGEN LEVEL ENHANCER IN AIR THROUGH ELECTROLYSIS OF WATER

(51) International classification	:C25B0001040000, C25B0015020000, C25B0009000000, C25B0001100000, C01B0013020000
(31) Priority Document No	:NA
(32) Priority Date	:NA
(33) Name of priority country	:NA
(86) International Application No	:NA
Filing Date	:NA
(87) International Publication No	: NA
(61) Patent of Addition to Application Number	:NA
Filing Date	:NA
(62) Divisional to Application Number	:NA
Filing Date	:NA

(71)**Name of Applicant :**
1)Pradeep Kumar Gupta
Address of Applicant :2/695 Buddhi Vihar, Delhi Road Moradabad Uttar Pradesh India Uttar Pradesh India
2)Anubhav Gupta
3)Archana Ravindra Jain
4)Ankit Kumar
5)Arun Kumar Pipersenia
6)Navneet Kumar Vishnoi
7)Vineet Saxena
8)Jyoti Ranjan Labh
9)Sandeep Saxena
(72)**Name of Inventor :**
1)Pradeep Kumar Gupta
2)Anubhav Gupta
3)Archana Ravindra Jain
4)Ankit Kumar
5)Arun Kumar Pipersenia
6)Navneet Kumar Vishnoi
7)Vineet Saxena
8)Jyoti Ranjan Labh
9)Sandeep Saxena

(57) Abstract :
An apparatus (100) for generating pure oxygen through electrolysis of water, comprises a main housing (102), a water inlet (108) adapted for supply of fresh charge of water into the main housing (102), a water reservoir (220) adapted to store water within the main housing (102), a main oxygen outlet (112) adapted to supply generated pure oxygen out from the main housing (102), a plurality of oxygen generating cells (210) provided within the main housing (102), a power source (230) configured to supply electrical power to the plurality of oxygen generating cells (210). Each oxygen generating cell of the plurality of oxygen generating cells (210) includes an anode (211) adapted to supply generated pure oxygen, a cathode (213) adapted to exhaust generated hydrogen, and an electrolyte solution (215) including water as a solvent. The anode (211) and the cathode (213) have been partially submerged in the electrolyte solution (215).

No. of Pages : 22 No. of Claims : 10

(12) PATENT APPLICATION PUBLICATION
(21) Application No.202111023392 A
(19) INDIA
(22) Date of filing of Application :26/05/2021
(43) Publication Date : 11/06/2021

(54) Title of the invention : AN ARTIFICIAL INTELLIGENCE (AI) BASED SYSTEM FOR USER CLASSIFICATION AND IDENTIFICATION FOR PROVIDING REWARDS TO USER AND METHOD THEREOF

(51) International classification	:G06Q0030020000, G06N0020000000, G06N0003080000, G06N0007000000, G06N0005020000
(31) Priority Document No	:NA
(32) Priority Date	:NA
(33) Name of priority country	:NA
(86) International Application No	:NA
Filing Date	:NA
(87) International Publication No	: NA
(61) Patent of Addition to Application Number	:NA
Filing Date	:NA
(62) Divisional to Application Number	:NA
Filing Date	:NA

(71)**Name of Applicant :**
1)Deepak Dudeja
Address of Applicant :Research Scholar Computer Science & Applications Department Ct University, Ludhiana, Punjab Ferozepur Rd, Sidhwan Khurd, Punjab 142024 Punjab India
2)Sarvesh Kumar
3)Medhavi Malik
4)Ms. Suchita Arora
5)Rashi Saxena
6)Dilip Kumar Saini
7)Dr. Awanish Kumar Singh
8)Neetesh Soni
(72)**Name of Inventor :**
1)Deepak Dudeja
2)Sarvesh Kumar
3)Medhavi Malik
4)Ms. Suchita Arora
5)Rashi Saxena
6)Dilip Kumar Saini
7)Dr. Awanish Kumar Singh
8)Neetesh Soni

(57) Abstract :
The present invention discloses an Artificial Intelligence (AI) based system for user classification and identification for providing rewards to a user and method thereof. The system includes, but not limited to, a processing unit provided in a cloud network for analysing previously offered rewards with an account and its transaction history with respect to a predefined business entity; an Artificial Intelligence and Machine learning module to create a metrics of the previously offered rewards and classifying the user with respect to their dealt business entity. The Artificial Intelligence and Machine learning module is configured to generate a new reward and offers for presenting to the user or holder of the account by identifying them on getting eligible after a predefined set of transactions.

No. of Pages : 21 No. of Claims : 8

(12) PATENT APPLICATION PUBLICATION
(21) Application No.202111023393 A
(19) INDIA
(22) Date of filing of Application :26/05/2021
(43) Publication Date : 11/06/2021

(54) Title of the invention : AN APPARATUS FOR PERFORMING CHEMICAL REACTION OF DETECTING ARSENIC

(51) International classification	:C02F0001520000, B01L0003000000, H01M0004360000, C04B0035520000, H05H0001460000
(31) Priority Document No	:NA
(32) Priority Date	:NA
(33) Name of priority country	:NA
(86) International Application No	:NA
Filing Date	:NA
(87) International Publication No	: NA
(61) Patent of Addition to Application Number	:NA
Filing Date	:NA
(62) Divisional to Application Number	:NA
Filing Date	:NA

(71)**Name of Applicant :**
1)DR. PRAVEEN KUMAR
Address of Applicant :Quantum School of Health Sciences, Quantum University, Mandawar- 22 Km milestone, Roorkee - Dehradun Highway, Roorkee-247167, Uttarakhand, India Uttarakhand India
2)DR. MEENU CHAUDHARY
3)DR. ASHUTOSH BADOLA
4)DR. BHUPENDRA SINGH
(72)**Name of Inventor :**
1)DR. PRAVEEN KUMAR

(57) Abstract :
The present invention relates to an apparatus (100) for performing chemical reaction of detecting arsenic gaseous compound: a platform stand (101); a reaction container (102), wherein said reaction container (102) comprises a reagent inlet (105) and a transfer outlet (106); a product retainer container (103), said product retainer container (103) comprises a transfer inlet (107) and a product out let (108); a curve glass pipe (104), wherein said curve glass pipe (104) connects said reaction container (102) and said product retainer container (103); a plurality of corks (110); and wherein said platform stand (101) is having arrangement to place said reaction container (102) and said product retainer container (103); wherein said curve glass pipe (104) comprises a hollow shape end (109A) and a flat open end (109B); wherein said reaction container (102) and said product retainer container (103) contains a plurality of reagents.

No. of Pages : 18 No. of Claims : 8

(12) PATENT APPLICATION PUBLICATION
(21) Application No.202111023402 A
(19) INDIA
(22) Date of filing of Application :26/05/2021
(43) Publication Date : 11/06/2021

(54) Title of the invention : ELECTRICITY GENERATING DEVICE

(51) International classification	:H04M0001725000, H04R0001020000, H02N0002180000, H04R0007040000, H02K0021160000
(31) Priority Document No	:NA
(32) Priority Date	:NA
(33) Name of priority country	:NA
(86) International Application No	:NA
Filing Date	:NA
(87) International Publication No	: NA
(61) Patent of Addition to Application Number	:NA
Filing Date	:NA
(62) Divisional to Application Number	:NA
Filing Date	:NA

(71)**Name of Applicant :**
1)GRAPHIC ERA (DEEMED TO BE) UNIVERSITY
Address of Applicant :566/6, Bell Road, Clement Town, Dehradun 248002, Uttarakhand, India Uttarakhand India
2)GRAPHIC ERA HILL UNIVERSITY, DEHRADUN CAMPUS
(72)**Name of Inventor :**
1)Deepak Singh Rana
2)Sumeshwar Singh
3)Shiv Ashish Dhondiyal
4)Dr. Varij Panwar
5)Ms. Palak Aggarwal

(57) Abstract :
The invention discloses an electricity generating device 101 for generating electricity using sound energy of the environment, said device 101 comprising: a fan motor 201; a magnetic bar 202; a sound vibration source 102; a plurality of magnetic coil 203; a voltmeter 204; a battery; a memory; and a processor. The method of generating electricity using sound energy of the environment comprises: receiving vibration of sound from said sound vibration source 102 to generate magnetic flux between two poles of said magnetic bar 202; rotating said fan motor 201 fitted between said magnetic bar 202 due to vibration of sound received from said sound vibration source 102 for changing magnetic flux; generating electricity in said plurality of magnetic coil 203 due to change in magnetic flux by rotating said fan motor 201; and storing, by said electricity generating device 101, said electricity in said battery for further use.

No. of Pages : 21 No. of Claims : 7

(12) PATENT APPLICATION PUBLICATION
(21) Application No.202111023456 A
(19) INDIA
(22) Date of filing of Application :26/05/2021
(43) Publication Date : 11/06/2021

(54) Title of the invention : SYNTHESIS AND PHARMACOLOGICAL EVALUATION OF IBUPROFEN ENTRAPPED SILVER NANOPARTICLES USING HERBALS

(51) International classification	:B82Y0030000000, B82Y0040000000, B22F0001000000, A01N0059160000, A61K0031192000
(31) Priority Document No	:NA
(32) Priority Date	:NA
(33) Name of priority country	:NA
(86) International Application No	:NA
Filing Date	:NA
(87) International Publication No	: NA
(61) Patent of Addition to Application Number	:NA
Filing Date	:NA
(62) Divisional to Application Number	:NA
Filing Date	:NA

(71)**Name of Applicant :**
1)Dr. Mohit
Address of Applicant :Associate Professor,Shri Ram Murti Smarak College of Engineering & Technology, Bareilly (Pharmacy),Ram Murti Puram, Bhojipura, 13 K.M., Bareilly-Nainital Highway, Bareilly, U.P., India, Pin Code-243202 Uttar Pradesh India
2)Dr. Lalit Singh
3)Dr. Girendra Kumar Gautam
4)Dr. Manmohan Singhal
5)Dr. Amit Kumar Verma
6)Dr. Ajeet Singh
7)Dr. Piush Sharma
8)Dr. Parveen Kumar
9)Dr. Ganesh N. Sharma
10)Dr. Ritesh Jain
11)Dr. Vipin Kumar
12)Dr. Anirudha Rishi
13)Dr. Deenanath Jhade
14)Mr. Gulshan Rathore
(72)**Name of Inventor :**
1)Dr. Mohit
2)Dr. Lalit Singh
3)Dr. Girendra Kumar Gautam
4)Dr. Manmohan Singhal
5)Dr. Amit Kumar Verma
6)Dr. Ajeet Singh
7)Dr. Piush Sharma
8)Dr. Parveen Kumar
9)Dr. Ganesh N. Sharma
10)Dr. Ritesh Jain
11)Dr. Vipin Kumar
12)Dr. Anirudha Rishi
13)Dr. Deenanath Jhade
14)Mr. Gulshan Rathore

(57) Abstract :
The present invention relates to synthesis of ibuprofen loaded silver nanoparticles by using herbal extract. The method used for the synthesis of silver Nano particles by green synthesis and to formulate a cost-effective antibacterial dosage form. The prepared ibuprofen loaded silver nanoparticles by using fruit extracts were effective against the gram negative bacteria E.coli.

No. of Pages : 16 No. of Claims : 1

(12) PATENT APPLICATION PUBLICATION
(21) Application No.202111023457 A
(19) INDIA
(22) Date of filing of Application :26/05/2021
(43) Publication Date : 11/06/2021

(54) Title of the invention : ZIRCONIUM AND URANIUM METAL COMPLEXES OF SEMICARBAZIDE DERIVATIVES WITH ANTIBACTERIAL ACTIVITY

(51) International classification	:A61K0035742000, C12N0015750000, C07D0471040000, A61K0038000000, A61P0031040000
(31) Priority Document No	:NA
(32) Priority Date	:NA
(33) Name of priority country	:NA
(86) International Application No	:NA
Filing Date	:NA
(87) International Publication No	: NA
(61) Patent of Addition to Application Number	:NA
Filing Date	:NA
(62) Divisional to Application Number	:NA
Filing Date	:NA

(71)**Name of Applicant :**
1)Dr. CHANDRA MOHAN
Address of Applicant :SBAS, K R MANGALAM UNIVERSITY, SOHNA ROAD,HARYANA, GURUGRAM-122103, Haryana India
2)Mr. VINOD KUMAR
3)Dr. SARLA KUMARI
4)Dr. NEERAJ KUMARI
(72)**Name of Inventor :**
1)Dr. CHANDRA MOHAN
2)Mr. VINOD KUMAR
3)Dr. SARLA KUMARI
4)Dr. NEERAJ KUMARI

(57) Abstract :
The present invention relates to synthesis and characterization of Schiff base ligand (L) by reacting semicarbazide with 2-acetylthiophene in ethanol solvent and its metal complexes have also been synthesized by using Zr4+, Pb2+ and U6+ ions. Schiff bases of semicarbazide are often having promising biological activities like anti-inflammatory, antidepressant, antiglycation, antibacterial etc. Schiff base ligand and metal complexes were characterized and have shown appropriate results when analyzed on UV-Vis., NMR, FT-IR and antibacterial activities. They were tested against gram- negative [E. Coli. (MTCC No: 452)] and gram-positive [Bacillus sp (MTCC No: 297)] bacterial strains by using Kirby-Bauer™s method. Schiff base complexes of Zirconium [Zr(L)4]Cl2] and lead [Pb(L)2]Cl2] were found to be more active against both bacterial strains having zone of inhibition 11.14 ± 0.2 & 10.23 ± 0.5 mm and 12.02 ± 0.3 & 11.05 ± 0.3 mm on E. Coli. and on Bacillus species respectively.

No. of Pages : 13 No. of Claims : 1

(12) PATENT APPLICATION PUBLICATION
(21) Application No.202111023516 A
(19) INDIA
(22) Date of filing of Application :26/05/2021
(43) Publication Date : 11/06/2021

(54) Title of the invention : A PORTABLE AMBU BAG VENTILATOR SYSTEM •

(51) International classification	:A61M0016000000, A61M0016100000, G01L0011000000, F02D0041000000, A61M0016200000	(71)**Name of Applicant :** **1)GLA University, Mathura** Address of Applicant :GLA University, 17km Stone, NH-2, Mathura-Delhi Road, CHAUMUHAN MATHURA UTTAR PRADESH India 281406 Uttar Pradesh India
(31) Priority Document No	:NA	(72)**Name of Inventor :**
(32) Priority Date	:NA	**1)Prof. Kamal Sharma**
(33) Name of priority country	:NA	**2)Mr. Himanshu Senger**
(86) International Application No	:NA	**3)Mr. Vineet Sinha**
Filing Date	:NA	**4)Mr. Abhinav Mishra**
(87) International Publication No	: NA	**5)Mr. Shailesh Sharma**
(61) Patent of Addition to Application Number	:NA	**6)Prof. Diwakar Bhardwaj**
Filing Date	:NA	
(62) Divisional to Application Number	:NA	
Filing Date	:NA	

(57) Abstract :
The present invention provides a low cost, portable ventilator system based on Ambu bag, comprising; a feedback controlled squeezing unit (FCSU) (1)for the intake of combination of oxygen and air; a one-directional valve (2)connected at both ends of a two-way tube to control the flow direction; a two-way tube (3)for intake of oxygen and exhale of carbon dioxide; a sensing device (4) adapted to measure the Peak Inspiratory Pressure (PIP) and PEEP pressures and provide pressure values to a controller; a controller(5) to control the amount of squeezing required depending upon the pressure values and opening and closing of one directional valve; a filter(6); and a power supply unit (7) connected to the controller. besides the present invention is cost effective, reliable and potable.

No. of Pages : 22 No. of Claims : 10

(12) PATENT APPLICATION PUBLICATION
(21) Application No.202111023672 A
(19) INDIA
(22) Date of filing of Application :27/05/2021
(43) Publication Date : 11/06/2021

(54) Title of the invention : A SYSTEM FOR BATTERY OPTIMIZATION FOR AUTOMATIC VEHICLE AND METHOD THEREOF

(51) International classification	:G06N0003080000, G06N0003040000, G06K0009000000, G06K0009460000, G01R0031367000
(31) Priority Document No	:NA
(32) Priority Date	:NA
(33) Name of priority country	:NA
(86) International Application No	:NA
Filing Date	:NA
(87) International Publication No	: NA
(61) Patent of Addition to Application Number	:NA
Filing Date	:NA
(62) Divisional to Application Number	:NA
Filing Date	:NA

(71)**Name of Applicant :**
1)Anshuka Bansal
Address of Applicant :Associate Professor Electrical & Instrumentation Engineering (EIE), SLIET Longowal, Punjab Punjab India
2)Dr. Priti Prabhakar
3)Sunil Kumar Bansal
(72)**Name of Inventor :**
1)Anshuka Bansal
2)Dr. Priti Prabhakar
3)Sunil Kumar Bansal

(57) Abstract :
The present invention discloses a system for battery optimization for automatic vehicle. The system is configured with Data-driven modeling using different battery signals to provide robust battery capacity estimation using data based decision. The proposed method and system further, a data acquisition unit, which consists of the sensors capture the desired data from battery and convert it in the desired format and presented to a data processing unit. Further, the data processing unit is taking this data and preprocesses it. Further, wherein the instructions to the data processing unit is further comprising a deep neural network and implementing equipment.

No. of Pages : 17 No. of Claims : 6

(12) PATENT APPLICATION PUBLICATION
(21) Application No.202111023776 A
(19) INDIA
(22) Date of filing of Application :28/05/2021
(43) Publication Date : 11/06/2021

(54) Title of the invention : INVERTED VERTICAL E PLATE BANK PROTECTION SYSTEM FOR RIVER

(51) International classification	:E02B0003120000, E02B0003060000, C02F0001440000, G01C0013000000, G01F0023296000
(31) Priority Document No	:NA
(32) Priority Date	:NA
(33) Name of priority country	:NA
(86) International Application No	:NA
Filing Date	:NA
(87) International Publication No	: NA
(61) Patent of Addition to Application Number	:NA
Filing Date	:NA
(62) Divisional to Application Number	:NA
Filing Date	:NA

(71)**Name of Applicant :**
1)Vikas Garg
Address of Applicant :Associate Professor, Department of Civil Engineering, Central University of Haryana, Mahendergarh Haryana India
(72)**Name of Inventor :**
1)Dr Vikas Garg
2)Dr Ajay Kumar Bansal
3)Dr Baldev Setia
4)Dr. D V S Verma
5)Yempali Priyanka
6)Muskan Garg

(57) Abstract :
Inverted vertical E plate bank protection system for river to improvise safety of river bank protection, comprises of three horizontal plates which are to be attached at the top edge of vertical plate, at the centre of vertical plate(at bed level) and at bottom of the vertical plate, three horizontal plates protect vertical plate from the direct impact of erosive action of water vertical plate is positioned at the bed level about 0.4 times of depth of water, three size of these horizontal plates were tested 0.05h, 0.1h and 0.5h reduces scour nearly 60-70% around the vertical plate(vane).

No. of Pages : 18 No. of Claims : 5

(12) PATENT APPLICATION PUBLICATION
(21) Application No.202111023892 A
(19) INDIA
(22) Date of filing of Application :28/05/2021
(43) Publication Date : 11/06/2021

(54) Title of the invention : EXPONENTIAL CALCULATOR USING PARALLEL PROCESSOR SYSTEMS

(51) International classification	:H04L0012240000, G06F0009500000, G06F0015800000, G06F0011220000, G06F0015020000	(71)**Name of Applicant :** **1)LAKHOTIA, Bhavesh** Address of Applicant :274, Sector 6, Malviya Nagar, Jaipur 302017, India Rajasthan India
(31) Priority Document No	:NA	(72)**Name of Inventor :** **1)LAKHOTIA, Bhavesh**
(32) Priority Date	:NA	
(33) Name of priority country	:NA	
(86) International Application No	:NA	
Filing Date	:NA	
(87) International Publication No	: NA	
(61) Patent of Addition to Application Number	:NA	
Filing Date	:NA	
(62) Divisional to Application Number	:NA	
Filing Date	:NA	

(57) Abstract :
An exponential calculator based on parallel computing is disclosed. The exponential calculator (200) includes a master system (101) and a plurality of nodes interconnected with each other to transfer and receive information and perform sub-computations independently and simultaneously. The master system (101) is configured to select a number of nodes from the plurality of nodes required to perform sub-computations for calculation of an integer exponent. The selected nodes is configured to receive value of a node base and a node exponent from the master system (101). The selected nodes calculate a first computation value, a second computation value and a third computation value. The master system (101) is further configured to instruct a sub-set of the selected nodes to perform summation of a final sub-computation of the selected nodes and provide an output.

No. of Pages : 32 No. of Claims : 24

(12) PATENT APPLICATION PUBLICATION
(21) Application No.202111023942 A
(19) INDIA
(22) Date of filing of Application :28/05/2021
(43) Publication Date : 11/06/2021

(54) Title of the invention : IRON PHTHALOCYANINE SUPRAMOLECULAR ARCHITECTURE •

(51) International classification	:B82Y0030000000, C09K0011650000, B82Y0040000000, C08G0083000000, C01B0021060000	(71)**Name of Applicant :** **1)GLA University, Mathura** Address of Applicant :GLA University,17km Stone, NH-2, Mathura-Delhi Road, CHAUMUHAN MATHURA (U.P) - 281406 Uttar Pradesh India
(31) Priority Document No	:NA	(72)**Name of Inventor :**
(32) Priority Date	:NA	**1)Mr. Anuj Kumar**
(33) Name of priority country	:NA	**2)Mr. Vinod Kumar Vashistha**
(86) International Application No	:NA	**3)Mr. Dipak Kumar Das**
Filing Date	:NA	
(87) International Publication No	: NA	
(61) Patent of Addition to Application Number	:NA	
Filing Date	:NA	
(62) Divisional to Application Number	:NA	
Filing Date	:NA	

(57) Abstract :
Iron Phthalocyanine Supramolecular Architecture • The present invention discloses a self-assembled FePc nanorods like supramolecular architecture, wherein the molecular-molecular assembly is organized in the fashion of -phase FePc arrangements with a suitable distance between two FePc crystals.The present invention also discloses a method for preparation of self-assembled FePc nanorods like supramolecular architecture, which is characterized in that adopting following steps: dispersing 0.05 g FePc in 10 mL ethylene glycol; providing ultrasonic treatment for 30 min; transferring the slurry into microwave autoclave irradiated at 350W, with varying the heating rate at 120 ºC, 150 ºC and 180 ºC for 5 min; centrifuging the slurry to collect the dark blue precipitate at 5000 rpm; washing the dark blue precipitate successively with methanol and ethanol several times; and drying at 60 ºC under vacuum condition for 12 h o obtain FePc nanorods in solid powder form.

No. of Pages : 21 No. of Claims : 8

(12) PATENT APPLICATION PUBLICATION
(21) Application No.202111023970 A
(19) INDIA
(22) Date of filing of Application :29/05/2021
(43) Publication Date : 11/06/2021

(54) Title of the invention : A METHOD FOR TECHNOLOGY INTELLIGENCE QUOTIENT (TIQ)

(51) International classification	:G06Q0010060000, G06Q0030020000, A61K0036110000, G01N0033500000, A61B0005083000	(71)**Name of Applicant :** **1)Sharda University** Address of Applicant :Plot No. 32, 34, Knowledge Park III, Greater Noida, Uttar Pradesh Uttar Pradesh India (72)**Name of Inventor :** **1)Dr. Subir Ranjan Das**
(31) Priority Document No	:NA	
(32) Priority Date	:NA	
(33) Name of priority country	:NA	
(86) International Application No	:NA	
Filing Date	:NA	
(87) International Publication No	: NA	
(61) Patent of Addition to Application Number	:NA	
Filing Date	:NA	
(62) Divisional to Application Number	:NA	
Filing Date	:NA	

(57) Abstract :
In the present disclosure a conceptual model has been developed for evaluating Technology Intelligence Quotient (ITQ) of any organisation. Technology Intelligence Quotient is the quotient which serves as the indicator which signifies the competence of an organisation to understand the technological capability of competitors and use information to achieve market leadership using research and development. Further the TIQ enables an organisation to effectively deploy and execute Competitive Technical Intelligence. Thereby, a company can focus onto identifying technological trends, opportunities and threats, and their relationship to competitors™ business strategies.

No. of Pages : 16 No. of Claims : 7

(12) PATENT APPLICATION PUBLICATION
(21) Application No.202111023974 A
(19) INDIA
(22) Date of filing of Application :29/05/2021
(43) Publication Date : 11/06/2021

(54) Title of the invention : SYSTEM AND METHOD FOR PROVIDING LOCATION-BASED SERVICES USING LOCATION ANALYTICS OF USER DEVICES WITH RESPECT TO TIME

(51) International classification	:H04L0029080000, G06Q0030020000, H04W0004029000, G10L0015220000, H04W0004020000
(31) Priority Document No	:NA
(32) Priority Date	:NA
(33) Name of priority country	:NA
(86) International Application No	:NA
Filing Date	:NA
(87) International Publication No	: NA
(61) Patent of Addition to Application Number	:NA
Filing Date	:NA
(62) Divisional to Application Number	:NA
Filing Date	:NA

(71)**Name of Applicant :**
1)Dr. Deepak Dahiya
Address of Applicant :College of Computer and Information Sciences, Majmaah University, Majmaah 11952, Saudi Arabia Saudi Arabia
2)Dr. Mamta Dahiya
(72)**Name of Inventor :**
1)Dr. Deepak Dahiya
2)Dr. Mamta Dahiya

(57) Abstract :
A method (200) for providing location-based services using location analytics of user devices with respect to time comprising registering (202) a plurality of first user devices (102) associated with respective customers, and a plurality of second user devices (106) associated with respective service providers; generating (204) (206) respective customer profiles and respective service provider profiles; receiving (208) a plurality of locations of all the plurality of registered first user devices (102) on multiple time instances; clustering (210) and forming one or more customer zones at multiple locations; identifying (212) one or more service providers offering the preferred services in the one or more customer zones; providing (214) a list of available services providers offering services preferred by the each customer in the respective customer zone on the respective registered first user device (102); and providing (216) locations of the one or more customer zones to the plurality of registered service providers.

No. of Pages : 28 No. of Claims : 10

(12) PATENT APPLICATION PUBLICATION
(21) Application No.202111024111 A
(19) INDIA
(22) Date of filing of Application :31/05/2021
(43) Publication Date : 11/06/2021

(54) Title of the invention : FRACTURE REDUCTION AND PLATE STABILIZATION SYSTEM

(51) International classification	:A61B0017880000, A61B0017800000, A61B0017700000, A61B0017280000, A61G0013120000
(31) Priority Document No	:NA
(32) Priority Date	:NA
(33) Name of priority country	:NA
(86) International Application No	:NA
Filing Date	:NA
(87) International Publication No	: NA
(61) Patent of Addition to Application Number	:NA
Filing Date	:NA
(62) Divisional to Application Number	:NA
Filing Date	:NA

(71)**Name of Applicant :**
1)Vineet Kumar
Address of Applicant :Department of Orthopaedics, Dr RMLIMS, Gomti Nagar, Lucknow, Uttar Pradesh, India-226010 Uttar Pradesh India
2)Swagat Mahapatra
3)Suruchi
(72)**Name of Inventor :**
1)Vineet Kumar
2)Swagat Mahapatra
3)Suruchi

(57) Abstract :
A fracture reduction and plate stabilization system to perform extramedullary fracture fixatioi for long bone fractures. This system consists of at least one pronged bone and plate holdinj and stabilizing forceps (Fig. 2) and the jaws on either side of the prong are combination jaw; with variable length. This forceps has at least one serrated jaw with flat and curved tip an< other at least one pointed jaw with ball and spike. This fracture reduction and plate stabilization system is compatible with conventiona Orthopaedic instruments for performing fracture fixation procedures in which extramedullar fixation This system also contains a bone plate with multiple indentations on the outer surface between the screw holes. These indentations are meant for engaging the ball spike of the bone and plate reduction forceps. The indentations are positioned in such a way so as to coincide with the spikes of the double pronged bone and plate reduction and stabilizing forceps.

No. of Pages : 25 No. of Claims : 20

(12) PATENT APPLICATION PUBLICATION
(21) Application No.202111024126 A
(19) INDIA
(22) Date of filing of Application :31/05/2021
(43) Publication Date : 11/06/2021

(54) Title of the invention : A ROOF DRAIN STRAINER SYSTEM

(51) International classification	:E04D0013040000, F16L0055240000, E04D0013080000, E03C0001264000, E03C0001262000
(31) Priority Document No	:NA
(32) Priority Date	:NA
(33) Name of priority country	:NA
(86) International Application No	:NA
Filing Date	:NA
(87) International Publication No	: NA
(61) Patent of Addition to Application Number	:NA
Filing Date	:NA
(62) Divisional to Application Number	:NA
Filing Date	:NA

(71)**Name of Applicant :**
1)Dr. VASUDHA ARORA
Address of Applicant :(ASSOCIATE PROFESSOR) ITS ENGINEERING COLLEGE, GREATER NOIDA, UP 201308, INDIA Uttar Pradesh India
2)Dr. NIHAR RANJAN ROY
3)Dr. RASHMI PRIYA
4)YOGESH KUMAR
5)SAKSHI SHARMA
6)SAURABH KUMAR SINGH
7)KAMAL KUMAR RANGA
8)GOURAV KUMAR
(72)**Name of Inventor :**
1)Dr. VASUDHA ARORA
2)Dr. NIHAR RANJAN ROY
3)Dr. RASHMI PRIYA
4)YOGESH KUMAR
5)SAKSHI SHARMA
6)SAURABH KUMAR SINGH
7)KAMAL KUMAR RANGA
8)GOURAV KUMAR
9)HARDEEP

(57) Abstract :
A roof drain strainer system (1) having upper (2) and lower strainer (3) which are connected and inserted inside the drain pipe (8). The pipe (8) is connected to the strainer system's lower portion and having two internal sides. The upper strainer (2) is connected to the left half side of the strainer system (1) and pipe (8). The lower strainer is connected to another half side or right side of the strainer system (1) and pipe (8). The strainer system (1) is being implanted into main/external pipe (11). There is a coupling (14) is between strainer system and pipe (8).

No. of Pages : 18 No. of Claims : 10

(12) PATENT APPLICATION PUBLICATION
(21) Application No.202111024129 A
(19) INDIA
(22) Date of filing of Application :31/05/2021
(43) Publication Date : 11/06/2021

(54) Title of the invention : INTERNET OF THINGS BASED USER CONTROLLED SOLAR ENERGY POWERED SMART IRRIGATION SYSTEM FOR PRECISION AGRICULTURE

(51) International classification	:A01G0025160000, H04W0084180000, A01B0079000000, G06N0020000000, G06N0003080000
(31) Priority Document No	:NA
(32) Priority Date	:NA
(33) Name of priority country	:NA
(86) International Application No	:NA
Filing Date	:NA
(87) International Publication No	: NA
(61) Patent of Addition to Application Number	:NA
Filing Date	:NA
(62) Divisional to Application Number	:NA
Filing Date	:NA

(71)**Name of Applicant :**
1)Dr. Ranjana
Address of Applicant :Associate Professor, Genetics and Plant Breeding, Department of Agriculture, Sanskriti University, Mathura, U.P, India Uttar Pradesh India
2)Dr. Rana Singh
3)Dr.Vilas Raghunath Jadhavar
4)Dr Sumit Saini
5)Anu Prakash
6)Mr. Neeraj Kant
7)Mr. Abdul Faheem
8)Sunil Kumar Mahapatro
9)Mr. Udit Mamodiya
10)Mr. Shashank Srivastav
11)Dheeraj Kumar Dhaked
(72)**Name of Inventor :**
1)Dr. Ranjana
2)Dr. Rana Singh
3)Dr.Vilas Raghunath Jadhavar
4)Dr Sumit Saini
5)Anu Prakash
6)Mr. Neeraj Kant
7)Mr. Abdul Faheem
8)Sunil Kumar Mahapatro
9)Mr. Udit Mamodiya
10)Mr. Shashank Srivastav
11)Dheeraj Kumar Dhaked

(57) Abstract :
The present invention relates to internet of things based user controlled solar energy powered smart irrigation system for precision agriculture. The objective of the present invention is to solve the problems in the prior art technologies of precision agriculture related to irrigation control.

No. of Pages : 29 No. of Claims : 4

(12) PATENT APPLICATION PUBLICATION
(21) Application No.202111024237 A
(19) INDIA
(22) Date of filing of Application :31/05/2021
(43) Publication Date : 11/06/2021

(54) Title of the invention : SYSTEM AND METHOD FOR MANUFACTURING BUILDING MATERIALS

(51) International classification	:B29C0064209000, B29C0064106000, B33Y0030000000, B01F0015020000, B29L0031100000
(31) Priority Document No	:NA
(32) Priority Date	:NA
(33) Name of priority country	:NA
(86) International Application No	:NA
Filing Date	:NA
(87) International Publication No	: NA
(61) Patent of Addition to Application Number	:NA
Filing Date	:NA
(62) Divisional to Application Number	:NA
Filing Date	:NA

(71)**Name of Applicant :**
1)ANGIRUS IND PRIVATE LIMITED
Address of Applicant :98, Ratneshwar Colony, Garhmagri, Shobhagpura, Udaipur, Rajasthan - 313011, India. Rajasthan India
(72)**Name of Inventor :**
1)GOSWAMI, Lokesh Puri
2)ARORA, Kunjpreet Kaur

(57) Abstract :
The present disclosure relates to a system for manufacturing building material. The system includes a first chamber having inert waste material, and the first chamber is configured to crush the inert waste material into aggregates of pre-defined size. A second chamber having molten plastic material. A mixing chamber, having a heating element, operatively coupled with the first chamber and the second chamber, and configured to receive the inert waste material aggregates and the molten plastic material and generates a composite paste of the inert waste material and the molten plastic. One or more molds, of a pre-defined shape, fluidically configured with the mixing chamber, and configured to receive the composite paste. The one or more molds are subjected to a hydraulic pressure to manufacture the building material.

No. of Pages : 18 No. of Claims : 5

(12) PATENT APPLICATION PUBLICATION
(21) Application No.202111024256 A
(19) INDIA
(22) Date of filing of Application :31/05/2021
(43) Publication Date : 11/06/2021

(54) Title of the invention : AN INSULIN PUMP WITH A LINEAR ACTUATOR ASSEMBLY

(51) International classification	:A61M0005142000, A61M0005172000, G16H0040630000, G06N0020000000, C07K0014620000	(71)**Name of Applicant :** **1)Dr. Deepak Agrawal** Address of Applicant :74, Pragati Apartment Paschim Vihar, New Delhi 110063 Delhi India **2)Prof. Diwakar Vaish**
(31) Priority Document No	:NA	(72)**Name of Inventor :**
(32) Priority Date	:NA	**1)Dr. Deepak Agrawal**
(33) Name of priority country	:NA	**2)Prof. Diwakar Vaish**
(86) International Application No	:NA	
Filing Date	:NA	
(87) International Publication No	: NA	
(61) Patent of Addition to Application Number	:NA	
Filing Date	:NA	
(62) Divisional to Application Number	:NA	
Filing Date	:NA	

(57) Abstract :
The present invention discloses an insulin pump with a linear actuator assembly. The assembly includes, but not limited to, a stepper motor placed to drive a piston; a removable insulin cartridge connected with the piston; a connector for connecting the removable insulin cartridge with a body attachment; a processing unit designed to guide for a predetermined delivery from the removable insulin cartridge to the patient by actuating the linear assembly; a machine learning interface to calibrate and to handle the whole process precisely according to the desired level of insulin delivery for the patient. Further, the machine learning interface is further configured to set and schedule the insulin delivery according to previous learning and training for the patient.

No. of Pages : 19 No. of Claims : 9

(12) PATENT APPLICATION PUBLICATION
(19) INDIA
(22) Date of filing of Application :01/06/2021

(21) Application No.202111024369 A
(43) Publication Date : 11/06/2021

(54) Title of the invention : A HONEYPOT BASED NETWORK SECURITY SYSTEM

(51) International classification	:H04L0029060000, H04W0012120000, G06N0020000000, G06F0017180000, G10K0015020000
(31) Priority Document No	:NA
(32) Priority Date	:NA
(33) Name of priority country	:NA
(86) International Application No	:NA
Filing Date	:NA
(87) International Publication No	: NA
(61) Patent of Addition to Application Number	:NA
Filing Date	:NA
(62) Divisional to Application Number	:NA
Filing Date	:NA

(71)**Name of Applicant :**
1)Mr. Binu Kuriakose Vargis
Address of Applicant :Department of Information Technology, Inderprastha Engineering College, Ghaziabad, India. Uttar Pradesh India
2)Dr. Kamal Upreti
3)Mr. Philson Manarcad
4)Mr. Vivek Garg
5)Dr. A. Harshavardhan
6)Mr. Basil Paul
7)Dr. Chaitanya P. Agrawal
8)Dr. Sangeeta Arora
(72)**Name of Inventor :**
1)Mr. Binu Kuriakose Vargis
2)Dr. Kamal Upreti
3)Mr. Philson Manarcad
4)Mr. Vivek Garg
5)Dr. A. Harshavardhan
6)Mr. Basil Paul
7)Dr. Chaitanya P. Agrawal
8)Dr. Sangeeta Arora

(57) Abstract :
Aspects of the present disclosure relate to a honeypot based network security system (100) and a data processing method (200) thereof. In an aspect, the honeypot-based network security system (100) comprises of: an attacking terminal (102) which sends a source data to the honeypot (104), and a honeypot (104) for acquiring the source data sent by the attacking terminal and comprising of bogus data. The method (200) of data processing on a honeypot-based network security system method comprises of: acquiring (202) a plurality of transmission control protocol (TCP) type source data set that are sent by the attack terminal, simulating (204) a TCP protocol for constructing a TCP feedback data packet which meets the pre-set requirement, and sending (206) the TCP feedback data packet to the attack terminal.

No. of Pages : 23 No. of Claims : 8

(12) PATENT APPLICATION PUBLICATION
(21) Application No.202111024378 A
(19) INDIA
(22) Date of filing of Application :01/06/2021
(43) Publication Date : 11/06/2021

(54) Title of the invention : A SYNERGISTIC HERBAL FORMULATION FOR TREATING VAGINAL INFECTIONS AND METHOD THEREOF

(51) International classification	:A61K0036600000, A61K0009480000, A61K0036610000, A61K0036580000, A61K0009000000	(71)**Name of Applicant :** **1)IKDK3012 PRIVATE LIMITED** Address of Applicant :H NO. 1375, SECTOR-4, GURUGRAM, HARYANA, 122001, INDIA Haryana India (72)**Name of Inventor :** **1)AASINKUMAR JAGNARAYAN MAURYA**
(31) Priority Document No	:NA	
(32) Priority Date	:NA	
(33) Name of priority country	:NA	
(86) International Application No	:NA	
Filing Date	:NA	
(87) International Publication No	: NA	
(61) Patent of Addition to Application Number	:NA	
Filing Date	:NA	
(62) Divisional to Application Number	:NA	
Filing Date	:NA	

(57) Abstract :
A synergistic herbal formulation for treating vaginal infections is disclosed. The formulation comprises effective amount of plant extracts selected from the group consisting of Azadirachta indica at 0.25% to 2% (w/v), Ficus benghalensis at 0.10 - 1% (w/v), Ficus glomerata at 0.10%-1% (w/v), Ficus religiosa at 0.10 - 1%(w/v), Thespesia populnea at 0.10 - 1% (w/v), Ficus infectoria at 0.10 - 1% (w/v) and Melaleuca alternifolia at 0.02 - 1% (w/v). The synergistic herbal formulation further comprises of lactic acids from AHA complex, natural fatty acids of coconut oil, soapnut extracts, glycerine, benzalkonium chloride, soya protein, wheat protein, sodium chloride, potassium sorbate, and fragrance. The synergistic herbal formulation of the present disclosure is effective in treatment of Vulvo-vaginal candidiasis and it can be formulated as water soluble gels, foaming solution, soft gel, solutions, aerosols, creams, ointments, capsules, microcapsules, suppositories or tablets, preferably water soluble gels, capsules or tablets.

No. of Pages : 51 No. of Claims : 14

(12) PATENT APPLICATION PUBLICATION
(21) Application No.202111024379 A
(19) INDIA
(22) Date of filing of Application :01/06/2021
(43) Publication Date : 11/06/2021

(54) Title of the invention : LATERAL FLOW IMMUNOASSAY BASED POINT OF CARE DIAGNOSTIC DEVICE FOR ULTRASENSITIVE COLORIMETRIC DETECTION OF DENGUE

(51) International classification	:G01N0033558000, G01N0033543000, G01N0033569000, A61B0010020000, G01N0033530000
(31) Priority Document No	:NA
(32) Priority Date	:NA
(33) Name of priority country	:NA
(86) International Application No	:NA
Filing Date	:NA
(87) International Publication No	: NA
(61) Patent of Addition to Application Number	:NA
Filing Date	:NA
(62) Divisional to Application Number	:NA
Filing Date	:NA

(71)**Name of Applicant :**
1)Indian Institute of Technology Kanpur
Address of Applicant :DEAN, RESEARCH & DEVELOPMENT, ROOM NUMBER 151, FACULTY BUILDING, POST OFFICE: IIT KANPUR, KANPUR- 208016, UTTAR PRADESH, INDIA Uttar Pradesh India
(72)**Name of Inventor :**
1)Geeta Bhatt
2)Mohammed Rashiku B C
3)Poonam Sundriyal
4)Prof. Shantanu Bhattacharya

(57) Abstract :
The present invention relates to the detection of Dengue. More specifically, the invention provides a lateral Flow Immunoassay based Point of Care Diagnostic Device for Ultrasensitive colorimetric detection of Dengue.

No. of Pages : 20 No. of Claims : 9

(12) PATENT APPLICATION PUBLICATION
(21) Application No.202111024563 A
(19) INDIA
(22) Date of filing of Application :02/06/2021
(43) Publication Date : 11/06/2021

(54) Title of the invention : CIVIL ENGINEERING WATER PUMP WITH GRID CONNECTED INTELLIGENT SOLAR SYSTEM FOR WATER MANAGEMENT

(51) International classification	:H04L0029080000, H04Q0009000000, G01N0033180000, G01D0021020000, G01K0001020000	(71)**Name of Applicant :** **1)Ajay Kumar Bansal** Address of Applicant :School of Engineering and Technology, Central University of Haryana, Jant-Pali, Mahendergarh Haryana India
(31) Priority Document No	:NA	(72)**Name of Inventor :**
(32) Priority Date	:NA	**1)Ajay Kumar Bansal**
(33) Name of priority country	:NA	**2)Vikas Garg**
(86) International Application No	:NA	**3)D. V. S. Verma**
Filing Date	:NA	**4)Baldev Setia**
(87) International Publication No	: NA	**5)Sunita Bansal**
(61) Patent of Addition to Application Number	:NA	**6)Dhruvi Bansal**
Filing Date	:NA	
(62) Divisional to Application Number	:NA	
Filing Date	:NA	

(57) Abstract :
Civil Engineering water pump with Grid connected intelligent solar system for water management to utilize internet of things (IoT) to monitor a consumer requirements and further enables a consumer to manage the requirements in real-time, water pump comprises water pump has two output valves, one for storage tank and second for direct use with solar panels, at least one sensor to measure temperature and humidity of surrounding area; IOT system for checking the water levels of tank and underground water and water quality having wireless unit configured with the sensor units to transmit the detected data to a remotely placed server unit via a communication network; Micro-Controller for operation of pump automatically based on data feed for different types of crops and requirements of water at different period of time; Water tank with pH value indictor with water quality sensor and timer, alarm buzz at given set time or the sensor give the signal for water requirement; processing module and control unit connected to the at least one sensor; control unit comprises instructions to process data related to at least one of the weather conditions, the water type, pump information ; server unit is configured with a database to store the collected data; computing devices connected to the server unit to receive the detected data from the server unit; and a software application integrated with the computing device to manage the use of water in two tank containing aqueous liquid that is controlled by a flow restricting mechanism connected to the processing module.

No. of Pages : 28 No. of Claims : 7

(12) PATENT APPLICATION PUBLICATION
(21) Application No.202111024621 A
(19) INDIA
(22) Date of filing of Application :02/06/2021
(43) Publication Date : 11/06/2021

(54) Title of the invention : POLYHERBAL FORMULATION FOR ALOPECIA

(51) International classification	:A61Q0007000000, A61K0036280000, A61K0036480000, A61K0036185000, A61K0009000000	(71)**Name of Applicant :** **1)Dr. Girendra Kumar Gautam** Address of Applicant :Director, Shri Ram College of Pharmacy, Parikrama Marg, Muzaffarnagar (U.P.), Pincode:251001. Uttar Pradesh India
(31) Priority Document No	:NA	(72)**Name of Inventor :**
(32) Priority Date	:NA	**1)Dr. Girendra Kumar Gautam**
(33) Name of priority country	:NA	**2)Dr. Akash Ved**
(86) International Application No	:NA	**3)Dr. Abhishek Tiwari**
Filing Date	:NA	**4)Dr. Mohit Chaturvedi**
(87) International Publication No	: NA	**5)Dr. Sattwik Das**
(61) Patent of Addition to Application Number	:NA	**6)Dr. Shailesh kumar Gupta**
Filing Date	:NA	**7)Dr.Vimal Kumar Yadav**
		8)Mr. Paras Sharma
(62) Divisional to Application Number	:NA	**9)Mr. Mohammad Akhtar Rasool**
Filing Date	:NA	**10)Mr. Anwar Iqbal Khan**

(57) Abstract :
The present invention relates to a composition for promoting hair growth, preventing the hair loss and alopecia. Many herbal products claim to have hair growth promoting activity. Trigonella foenum greacum seed, flower of Hibiscus rosa sinensis Linn and leave of Eclipta alba (L.) extracts were obtained separately by soxhlation method. FT-IR spectrograms peaks study of plants extracts and polymers were found to be compatible. Total eight preparations were formulated by using different ratios of Carbopol 934 and sodium CMC. On comparison of kinetic modeling and release profile data it was evident that Hydro-alcoholic gel FH was found to release the drug in accordance to Higuchi kinetics model.

No. of Pages : 28 No. of Claims : 2

(12) PATENT APPLICATION PUBLICATION
(21) Application No.202111024622 A
(19) INDIA
(22) Date of filing of Application :02/06/2021
(43) Publication Date : 11/06/2021

(54) Title of the invention : FLAX SEED SUPPOSITORIES FOR RAPID DRUG DELIVERY

(51) International classification	:A61K0009020000, A61K0009000000, A61K0047020000, A61K0036899000, A61N0001360000	(71)**Name of Applicant :** **1)Dr.Amit Kumar Verma** Address of Applicant :Faculty Department of Pharmacy, MJP Rohilkhand University Bareilly UP, Pincode: 243006. Uttar Pradesh India
(31) Priority Document No	:NA	(72)**Name of Inventor :**
(32) Priority Date	:NA	**1)Dr.Amit Kumar Verma**
(33) Name of priority country	:NA	**2)Mrs. Preeti Mishra**
(86) International Application No	:NA	
Filing Date	:NA	
(87) International Publication No	: NA	
(61) Patent of Addition to Application Number	:NA	
Filing Date	:NA	
(62) Divisional to Application Number	:NA	
Filing Date	:NA	

(57) Abstract :
The present invention relates to the technical field of medicine, and particularly relates to a stable, non-sticky suppository and a method of preparing thereof. The suppository is prepared by using an flax seed water extract as a main ingredient and glycerinated gelatin base with and without active pharmaceutical ingredient and/or ayurvedic ingredients. The suppository can be used as a laxative, pain relief or for constipation,

No. of Pages : 25 No. of Claims : 6

(12) PATENT APPLICATION PUBLICATION
(21) Application No.202117021546 A
(19) INDIA
(22) Date of filing of Application :12/05/2021
(43) Publication Date : 11/06/2021

(54) Title of the invention : AIR POLLUTANTS CAPTURING TECHNIQUE THROUGH SMART INVENTIVE FRAMEWORK FOR DOWNSTREAM CHEMICAL PROCESSING

(51) International classification	:E01C0001000000, C10L0001020000, H04L0001000000, B01D0046000000, B01D0053640000
(31) Priority Document No	:NA
(32) Priority Date	:NA
(33) Name of priority country	:NA
(86) International Application No	:PCT/IN2019/050157
Filing Date	:26/02/2019
(87) International Publication No	:WO 2019/220449
(61) Patent of Addition to Application Number	:NA
Filing Date	:NA
(62) Divisional to Application Number	:NA
Filing Date	:NA

(71)**Name of Applicant :**
1)SHARMA, CHANDAN
Address of Applicant :F1, 1st Floor, Plot No-19 Gyan Khand-1, Indirapuram Ghaziabad-201014 Uttar Pradesh India
(72)**Name of Inventor :**
1)SHARMA, CHANDAN
2)SHARMA, PRAVEEN
3)SHARMA, UJJAWAL

(57) Abstract :
The invention is regarding bringing out an innovative air pollutant capturing technique or process by which a system could be established in order to capture the air pollutants in a city at suitable locations and send the same through the pipeline system to a processing plant in order to convert it into a useful low carbon transportation fuel or any useful chemical product/by-product or petrochemicals and at the same time reducing pollutants and green house gases affecting the environment. The invention states that a system/technique/method/process is brought to efficiently capture the air pollutants using a vacuum ejector system & other associated equipments and infrastructures at major elevated metro stations or at any place inside an urban landscape and send the same through a network of pipeline system having intermediate boosting stations, in order to take the captured pollutants to a nearby processing plant for producing useful fuel or chemicals.

No. of Pages : 16 No. of Claims : 14

(12) PATENT APPLICATION PUBLICATION
(21) Application No.201921036523 A
(19) INDIA
(22) Date of filing of Application :11/03/2020
(43) Publication Date : 11/06/2021

(54) Title of the invention : UAV WITH SENTRY GUN

(51) International classification	:B64C0039020000, H04N0005232000, G06K0009000000, G05D0001000000, B22C0009100000	(71)**Name of Applicant :** **1)SHUBHAM ANILKUMAR SHAH** Address of Applicant :51/B PAVITRANAGAR OPPOSITE CADILA LABORATORY ,GHODASAR,AHMEDABAD Gujarat India
(31) Priority Document No	:NA	(72)**Name of Inventor :**
(32) Priority Date	:NA	**1)SHUBHAM ANILKUMAR SHAH**
(33) Name of priority country	:NA	
(86) International Application No	:NA	
Filing Date	:NA	
(87) International Publication No	: NA	
(61) Patent of Addition to Application Number	:NA	
Filing Date	:NA	
(62) Divisional to Application Number	:NA	
Filing Date	:NA	

(57) Abstract :
An unmanned aerial vehicle (100) with sentry gun (08) includes a body with three parts back parts, middle parts and front parts in a metal casted square and a controller. The back part of the body includes double ball joint (11) and magneto rheological damper (10) in angular shape. The middle part of the body includes single ball joint attached in a downward frame, an actuator housing attached with the single ball joint (03), actuator and center of gravity frame. The front part includes a frame attached to the single ball joint (03) where small single ball joint at certain angle and a gun holder attached to the front side to hold the gun (08). Further, the present invention works on scissor mechanism (05) at the top most and least point vertically which is attached with the lowest point of frame. And two precise actuators are connected at lowest point frame horizontally for center of gravity housing part in a metal casted square. As per drawing: FIG. 1.

No. of Pages : 26 No. of Claims : 14

(12) PATENT APPLICATION PUBLICATION
(19) INDIA
(22) Date of filing of Application :08/01/2020
(21) Application No.202021000782 A
(43) Publication Date : 11/06/2021

(54) Title of the invention : MUTANT PENICILLIN G ACYLASES OF ACHROMOBACTER CCM4824

(51) International classification	:C12P0037040000, C12N0009840000, C12P0035040000, C12R0001025000, C12N0011040000	(71)**Name of Applicant :** **1)FERMENTA BIOTECH LIMITED** Address of Applicant :A-1501, Thane One, ˜DIL™ Complex, Ghodbunder Road, Majiwada, Thane (West)-400 610, Maharashtra, India. Maharashtra India
(31) Priority Document No	:NA	(72)**Name of Inventor :**
(32) Priority Date	:NA	**1)DESAI, Anupama Datla**
(33) Name of priority country	:NA	**2)NAGRE, Prashant**
(86) International Application No	:NA	**3)TAMORE, Jagdish**
Filing Date	:NA	**4)KRISHNA, Muralidharan**
(87) International Publication No	: NA	**5)ASHAR, Trupti**
(61) Patent of Addition to Application Number	:NA	
Filing Date	:NA	
(62) Divisional to Application Number	:NA	
Filing Date	:NA	

(57) Abstract :
The present invention discloses mutant semi-synthetic -lactam antibiotics synthesizing enzymes of penicillin G acylase from Achromobacter sp. CCM4824 generated by site directed mutations with substitution of one or more amino acid positions. The gene sequence encoding mutant penicillin acylase borne on plasmid pKARA9 is expressed in E.coli BL21. The enzymes so obtained from recombinant E.coli BL21 showed improved penicillin acylase activity, S/H ratio, lower input ratio of acyl donor and improved yields compared to parent penicillin acylase enzyme from Achromobacter sp CCM 4824.

No. of Pages : 44 No. of Claims : 10

(12) PATENT APPLICATION PUBLICATION
(21) Application No.202021018340 A
(19) INDIA
(22) Date of filing of Application :29/04/2020
(43) Publication Date : 11/06/2021

(54) Title of the invention : MULTI-DRILL CULTI-ROTAVATOR

(51) International classification	:A01N0043800000, A01C0023000000, A01B0003680000, B60C0011030000, A01N0043713000	(71)**Name of Applicant :** **1)Dr. Chaitanya A. Patel** Address of Applicant :Bhanujit • 6, Chunibhai Colony, Nr. Old Pilot Dairy Cross Roads, Kankaria, Behrampura. Ahmedabad Gujarat India 380022 Gujarat India
(31) Priority Document No	:NA	(72)**Name of Inventor :**
(32) Priority Date	:NA	**1)Dr. Chaitanya A. Patel**
(33) Name of priority country	:NA	
(86) International Application No	:NA	
Filing Date	:NA	
(87) International Publication No	: NA	
(61) Patent of Addition to Application Number	:NA	
Filing Date	:NA	
(62) Divisional to Application Number	:NA	
Filing Date	:NA	

(57) Abstract :
Abstract Multi-drill Culti-Rotavator The Multi-drill culti rotavator, according to the present invention, is used for cultivating or ploughing the soil and at the same 10 time, for rotavating the soil for agricultural and gardening purpose. Said culti rotavator effectively drills and cultivates the soil preparing it for the irrigation retaining soil moisture increasing soil absorption capacity of the soil. Said multi drill culti rotavator is hung at the rear end of the tractor. It comprises of: Differential Gear Box Assembly 2, Main Body Assembly 3, Bottom differential Gear box Assembly 4, Gear Axle Assembly 5 , End Bearing Housing Assembly 6, Drill Bit Shaft Assembly 7. Fig 1

No. of Pages : 33 No. of Claims : 9

(12) PATENT APPLICATION PUBLICATION
(21) Application No.202021023187 A
(19) INDIA
(22) Date of filing of Application :02/06/2020
(43) Publication Date : 11/06/2021

(54) Title of the invention : VENTILATOR PUMPING APPARATUS

(51) International classification	:A61M0016000000, A61M0016080000, A23L0003341800, B01D0035020000, F04B0009127000	(71)**Name of Applicant :** **1)VIVEK RANGRAO DALVI** Address of Applicant :SHREENIVAS, PLOT NO.77, SECTOR NO.25, SINDHUNAGAR, PRADHIKARAN, NIGDI, PUNE 411044 Maharashtra India **2)RASIKA VIVEK DALVI**
(31) Priority Document No	:NA	
(32) Priority Date	:NA	(72)**Name of Inventor :**
(33) Name of priority country	:NA	**1)VIVEK RANGRAO DALVI**
(86) International Application No	:NA	**2)RASIKA VIVEK DALVI**
Filing Date	:NA	
(87) International Publication No	: NA	
(61) Patent of Addition to Application Number	:NA	
Filing Date	:NA	
(62) Divisional to Application Number	:NA	
Filing Date	:NA	

(57) Abstract :
ABSTRACT VENTILATOR PUMPING APPARATUS A ventilator pumping apparatus 100 is described. The ventilator pumping apparatus 100 includes an air compressor 105, a pressure regulator valve 110, solenoid valve 115, a cylindrical container 120, a controller 125 and a balloon 130. The regulator valve 110 is positioned between the air compressor 105 and the solenoid valve 115. The solenoid valve 115 and the compressor 105 are connected to the controller 125 that controls the ventilator in which the pumping system is integrated. The controller 125 is configured to receive inputs from a user and run the ventilator pumping apparatus 100. The cylindrical container 120 is an airtight container that is sealed with a sealant. The balloon 130 is securely positioned inside the container 120 that further includes a safety valve. FIG. 1 For Publication

No. of Pages : 33 No. of Claims : 12

(12) PATENT APPLICATION PUBLICATION
(19) INDIA
(22) Date of filing of Application :19/06/2020
(21) Application No.202021025879 A
(43) Publication Date : 11/06/2021

(54) Title of the invention : CORONA KAVACH (DEVICE)

(51) International classification	:H02K0003400000, B29C0059100000, A61K0009510000, F01N0003080000, B32B0038000000
(31) Priority Document No	:NA
(32) Priority Date	:NA
(33) Name of priority country	:NA
(86) International Application No	:NA
Filing Date	:NA
(87) International Publication No	: NA
(61) Patent of Addition to Application Number	:NA
Filing Date	:NA
(62) Divisional to Application Number	:NA
Filing Date	:NA

(71)**Name of Applicant :**
1)SHIMPI RAHUL JAYWANTRAO
Address of Applicant :5 JAY, FOREST COLONY, DEOPUR, DHULE - 424005, MAHARASHTRA, INDIA. Maharashtra India
(72)**Name of Inventor :**
1)SHIMPI RAHUL JAYWANTRAO

(57) Abstract :
7. ABSTRACT OF THE INVETION: Now a day's whole word is struggling to find a vaccine for COVID-19. According to the ministry of Health & Family Welfare social distancing is non-pharmaceutical infection prevention and control intervention implemented to avoid or decrease contact between the 5 COVID-19 infected causing pathogen and those who are not, so as to stop or slow down the rate and extent of disease transmission in a community. The preventive measures for COVID-19 are maintaining social distance & keep hands clean. The proposed Corona Kavach Device is intended for maintaining social distance of one/two meter between two persons with announcement in mother tongue. Also it provide periodic 10 reminder to wash our hands. It also equipped with temperature sensor to measure body temperature of user.

No. of Pages : 4 No. of Claims : 2

(12) PATENT APPLICATION PUBLICATION
(21) Application No.202021043671 A
(19) INDIA
(22) Date of filing of Application :07/10/2020
(43) Publication Date : 11/06/2021

(54) Title of the invention : REAL TIME OPTIMUM RESPIRATION ASSISTANCE SYSTEM THROUGH PEAK INSPIRATORY FLOW RATE AND METHOD THEREOF

(51) International classification	:A61M0016000000, A61B0005000000, A61B0005087000, A61M0015000000, B22F0007060000	(71)**Name of Applicant :** **1)MOHAN SHIVDAS SWAMI** Address of Applicant :ERRA 55/3B ASHOK PATH, ERANDVANA, PUNE-411004, MAHARASHTRA, INDIA Maharashtra India
(31) Priority Document No	:NA	**2)ADESH GOKHALE**
(32) Priority Date	:NA	(72)**Name of Inventor :**
(33) Name of priority country	:NA	**1)MOHAN SHIVDAS SWAMI**
(86) International Application No	:NA	**2)ADESH GOKHALE**
Filing Date	:NA	
(87) International Publication No	: NA	
(61) Patent of Addition to Application Number	:NA	
Filing Date	:NA	
(62) Divisional to Application Number	:NA	
Filing Date	:NA	

(57) Abstract :
The present invention provides a respiratory assistance system (100) and a respiratory assistance method. The respiratory assistance system (100) measures one or more vital respiratory parameters of a patient by a sensing unit (120). A processor (110) determines an optimum flow rate of oxygen based on the vital respiratory parameters and controls a pressure monitor and control unit (116) coupled with an oxygen source (104) to provide the flow of oxygen at the optimum flow rate during a peak inspiratory flow to assist the patient in respiration. Ref. Fig.: Figure 1

No. of Pages : 23 No. of Claims : 12

(12) PATENT APPLICATION PUBLICATION
(21) Application No.202021044084 A
(19) INDIA
(22) Date of filing of Application :09/10/2020
(43) Publication Date : 11/06/2021

(54) Title of the invention : LIQUID ORAL SUSPENSION OF FAVIPIRAVIR

(51) International classification	:A61K0009000000, A61K0031496500, A61K0047020000, A61K0047380000, A61K0009100000
(31) Priority Document No	:NA
(32) Priority Date	:NA
(33) Name of priority country	:NA
(86) International Application No	:NA
Filing Date	:NA
(87) International Publication No	: NA
(61) Patent of Addition to Application Number	:NA
Filing Date	:NA
(62) Divisional to Application Number	:NA
Filing Date	:NA

(71)**Name of Applicant :**
1)AUXILLA PHARMACEUTICALS AND RESEARCH LLP
Address of Applicant :Plot no. 194, Medows 2, Gokuldham, Village Sanathal, TA: Sanathal, Ahmedabad-382110, Gujarat India Gujarat India
(72)**Name of Inventor :**
1)UMRETHIA, MANISH
2)KHUNT, DIGNESH

(57) Abstract :
ABSTRACT LIQUID ORAL SUSPENSION OF FAVIPIRAVIR The present invention is a liquid oral suspension of Favipiravir. Particularly the present invention is a liquid oral suspension of Favipiravir comprising Favipiravir and glycerin, the pH of the composition is 4 to 8. The present invention is also process for preparing the liquid oral suspension of Favipiravir.

No. of Pages : 26 No. of Claims : 9

(12) PATENT APPLICATION PUBLICATION
(19) INDIA
(22) Date of filing of Application :11/02/2021
(21) Application No.202121005883 A
(43) Publication Date : 11/06/2021

(54) Title of the invention : GAS PERMEABILITY MEASUREMENT APPARATUS AND METHOD

(51) International classification	:B01F0003040000, C25B0015080000, G01N0015080000, C12M0001120000, B01D0065100000
(31) Priority Document No	:NA
(32) Priority Date	:NA
(33) Name of priority country	:NA
(86) International Application No	:NA
Filing Date	:NA
(87) International Publication No	: NA
(61) Patent of Addition to Application Number	:NA
Filing Date	:NA
(62) Divisional to Application Number	:NA
Filing Date	:NA

(71)**Name of Applicant :**
1)Dr. Netram Kaurav
Address of Applicant :Government Holkar (Model, Autonomous) Science College, A.B. Road, Near Bhawarkua Square, Indore, Madhya Pradesh 452017 Madhya Pradesh India
2)Ms. Disha Harinkhere
3)Dr. G. S. Okram
(72)**Name of Inventor :**
1)Dr. Netram Kaurav
2)Ms. Disha Harinkhere
3)Dr. G. S. Okram

(57) Abstract :
A gas permeability measurement apparatus is disclosed. A membrane cell (102) is provided and comprises at least two cylinders (104, 106) with a first gas cylinder (104) having an inlet valve (110). A pressure gauge (114) is configured to feed a test gas which is being supplied at said constant pressure on a feed side of said membrane cell (102). A purging valve (118) coupled to an upper side of said membrane cell (102), and is configured to remove out impurities by purging at least 2-3 times in order to attain a smooth transport rate. A circular-shaped clutch (108) is provided with dimensions more than said membrane cell (102), in order that said membrane cell (102) is detached and/or attached from and/or to said circular-shaped clutch (108) slot. A bubble flow meter (126) is provided in order to measure transport of gas at said downstream side via said outlet valve (112).

No. of Pages : 30 No. of Claims : 9

(12) PATENT APPLICATION PUBLICATION
(19) INDIA
(22) Date of filing of Application :18/02/2021
(21) Application No.202121006745 A
(43) Publication Date : 11/06/2021

(54) Title of the invention : SYSTEM AND METHOD FOR NFC TRANSACTIONS ON USER MOBILE DEVICES

(51) International classification	:G06Q0020320000, G06Q0020200000, G06Q0020340000, H04W0004800000, G06Q0050120000
(31) Priority Document No	:NA
(32) Priority Date	:NA
(33) Name of priority country	:NA
(86) International Application No	:NA
Filing Date	:NA
(87) International Publication No	: NA
(61) Patent of Addition to Application Number	:NA
Filing Date	:NA
(62) Divisional to Application Number	:NA
Filing Date	:NA

(71)**Name of Applicant :**
1)SYNERGISTIC FINANCIAL NETWORKS PRIVATE LIMITED
Address of Applicant :801 SAGARTECH PLAZA BUILDING A • , SAKINAKA, ANDHERI EAST, MUMBAI 400072, INDIA Maharashtra India
(72)**Name of Inventor :**
1)ALOK ARORA
2)BHUSHAN THAKER
3)SAMEER CHUGH

(57) Abstract :
A system for facilitating a Near-Field Communication (NFC) transaction comprising a user™s NFC-enabled electronic device, a user™s NFC-enabled card, and a transaction server is disclosed. The user™s NFC-enabled electronic device includes a background NFC service (BNS) and applications. The applications may be configured to provide an NFC transaction request including recipient information to the BNS via service calls. The BNS may be configured to provide the recipient information and card details associated with the user™s NFC-enabled card to the transaction server. Further, the transaction server may be configured to provide the recipient information and the card details to a transaction processor, an acquirer bank, or an issuer bank. A method, an NFC-enabled electronic device, and a transaction server for facilitating the NFC transaction is also disclosed.

No. of Pages : 53 No. of Claims : 22

(12) PATENT APPLICATION PUBLICATION
(19) INDIA
(22) Date of filing of Application :24/03/2021
(21) Application No.202121012817 A
(43) Publication Date : 11/06/2021

(54) Title of the invention : HYDRO WIND ELECTRIC POWER GENERATION SYSTEM

(51) International classification	:F03B0017000000, E21B0043120000, E21B0041000000, B60T0011260000, F03B0013060000
(31) Priority Document No	:NA
(32) Priority Date	:NA
(33) Name of priority country	:NA
(86) International Application No	:NA
Filing Date	:NA
(87) International Publication No	: NA
(61) Patent of Addition to Application Number	:NA
Filing Date	:NA
(62) Divisional to Application Number	:NA
Filing Date	:NA

(71)**Name of Applicant :**
1)CHAUHAN, Surjeet Singh
Address of Applicant :A-14, Sarover Housing Society, Near Gurudwara Chowk, Akurdi, Pune - 411033, Maharashtra, India. Maharashtra India
(72)**Name of Inventor :**
1)CHAUHAN, Surjeet Singh

(57) Abstract :
The present disclosure relates to a system (100) for generating power, the system includes an electrical generating turbine (106) that receives water from an upper portion (102) of a reservoir, the electrical generating turbine generates electrical power, the upper portion of the reservoir configured to receive water from a source. One or more pipes (118) adapted to allow the passage of water from a lower portion of the reservoir to the upper portion (104) of the reservoir. Hydraulic cylinders (202) are pivotally coupled to a shaft (204) of a windmill device, wherein the rotational motion of one or more blades of the windmill device is converted into a reciprocation motion by windmill rod. Hydraulic cylinder lift pump rod (116) which loaded with water due to pump piston to lift the water from the lower portion of the reservoir to the upper portion of the reservoir.

No. of Pages : 25 No. of Claims : 10

(12) PATENT APPLICATION PUBLICATION
(21) Application No.202121016866 A
(19) INDIA
(22) Date of filing of Application :10/04/2021
(43) Publication Date : 11/06/2021

(54) Title of the invention : READY TO USE LIQUID SOLUTION OF LEVOTHYROXINE

(51) International classification	:A61K0031198000, A61K0047020000, A61K0009080000, A61K0038040000, A61K0009000000
(31) Priority Document No	:NA
(32) Priority Date	:NA
(33) Name of priority country	:NA
(86) International Application No	:NA
Filing Date	:NA
(87) International Publication No	: NA
(61) Patent of Addition to Application Number	:NA
Filing Date	:NA
(62) Divisional to Application Number	:NA
Filing Date	:NA

(71)**Name of Applicant :**
1)AUXILLA PHARMACEUTICALS AND RESEARCH LLP
Address of Applicant :Plot no. 194, Medows 2, Gokuldham, Village Sanathal, TA: Sanathal, Ahmedabad-382110, Gujarat, India. Gujarat India
(72)**Name of Inventor :**
1)PARIKH, DHRUV RAJESHKUMAR
2)PATEL, NITESH
3)UMRETHIA, MANISH

(57) Abstract :
ABSTRACT READY TO USE LIQUID SOLUTION OF LEVOTHYROXINE The present invention is a ready to use liquid solution of levothyroxine. The present invention is also a ready to use liquid solution of levothyroxine which is comprising levothyroxine, a solubilizer, a stabilizer and water for injection. The present invention is in particular a ready to use liquid solution of levothyroxine and process of preparation of the same.

No. of Pages : 20 No. of Claims : 11

(12) PATENT APPLICATION PUBLICATION
(21) Application No.202121018989 A
(19) INDIA
(22) Date of filing of Application :24/04/2021
(43) Publication Date : 11/06/2021

(54) Title of the invention : DUAL APPLICATION TOPICAL FORMULATIONS FOR TREATING PAIN AND INFLAMMATION

(51) International classification	:A61K0009000000, A61K0047320000, A61K0008490000, A61K0047140000, A61K0031196000
(31) Priority Document No	:NA
(32) Priority Date	:NA
(33) Name of priority country	:NA
(86) International Application No	:NA
Filing Date	:NA
(87) International Publication No	: NA
(61) Patent of Addition to Application Number	:NA
Filing Date	:NA
(62) Divisional to Application Number	:NA
Filing Date	:NA

(71)**Name of Applicant :**
1)VAISHALI ASHISH SHIRSAT
Address of Applicant :B-26, HOME CHS, RELIEF ROAD, DAULATNAGAR, SANTACRUZ WEST, MUMBAI-400054, MAHARASHTRA, INDIA Maharashtra India
(72)**Name of Inventor :**
1)VAISHALI ASHISH SHIRSAT
2)ESHA SHAH
3)SNEHA BALU GOVIND
4)MRUNAL MADAN BULBULE

(57) Abstract :
DUAL APPLICATION TOPICAL FORMULATIONS FOR TREATING PAIN AND INFLAMMATION The present invention relates to a novel topical dual application system and method of treating a pain and inflammation in a subject in need thereof, comprising dual or co-application of two topical formulations comprising Non-steroidal anti-inflammatory agents, counter-irritant agent and analgesic agent. The present invention provides a dual application topical formulation system for treating pain and inflammation, comprising of: first part of proniosomal gel carrier loaded with Non-steroidal anti-inflammatory agents and second part of gel base carrier loaded with analgesic agent selected from Methyl salicylate and counter-irritant agent selected from camphor, wherein the second part provides hydration to first part at the time of topical application resulting into formation of niosomal nanoparticles loaded with Non-steroidal anti-inflammatory agents having particle size in a range of about 250 to 990 nanometers having properties to penetrate through skin for effective treatment.

No. of Pages : 39 No. of Claims : 10

(12) PATENT APPLICATION PUBLICATION
(21) Application No.202121020010 A
(19) INDIA
(22) Date of filing of Application :30/04/2021
(43) Publication Date : 11/06/2021

(54) Title of the invention : DEVICE, SYSTEM AND METHOD FOR RECORDING FINANCIAL TRANSACTION

(51) International classification	:G06Q0020200000, G06Q0010000000, G06Q0020340000, G06K0019070000, A61B0090980000	(71)**Name of Applicant :** **1)TOHANDS PRIVATE LIMITED** Address of Applicant :A-205, Tirupati Ashish CHS, Opp, Hotel Amber, Shahad, Kalyan (W), Thane - 421103, Maharashtra, India. Maharashtra India
(31) Priority Document No	:NA	(72)**Name of Inventor :**
(32) Priority Date	:NA	**1)PRAVEEN MISHRA**
(33) Name of priority country	:NA	**2)SATYAM SAHU**
(86) International Application No	:NA	
Filing Date	:NA	
(87) International Publication No	: NA	
(61) Patent of Addition to Application Number	:NA	
Filing Date	:NA	
(62) Divisional to Application Number	:NA	
Filing Date	:NA	

(57) Abstract :
The present disclosure relates to a system (100) for recording financial transactions, the system includes a device (102) comprising an information input unit (106) having one or more buttons (106-1 -106-6), each of the one or more buttons operable for entering a set of data by a user. A processor (112) configured to receive, from the information input unit, the set of data pertaining to any or a combination of credit information and debit information associated with the transaction of the user. The processor (112) categorize the received set of data and establish, by a communication unit (108), synchronization between the device and the one or more computing devices to transmit the stored set of data, wherein based on the set of data received at the one or more computing devices, a corresponding report is generated that is accessible by the user.

No. of Pages : 23 No. of Claims : 10

(12) PATENT APPLICATION PUBLICATION
(21) Application No.202121020370 A
(19) INDIA
(22) Date of filing of Application :04/05/2021
(43) Publication Date : 11/06/2021

(54) Title of the invention : PLASTIC MODIFIED BITUMEN IN PARTIALLY RUBBER AGGREGATED ASPHALT FOR ROAD CONSTRUCTION USING MARSHALL STABILITY TEST

(51) International classification	:C08L0095000000, C08L0021000000, G06Q0010060000, C08L0017000000, G01N0003560000	(71)**Name of Applicant :** **1)Rajshekhar Gopal Rathod** Address of Applicant :Civil Engineering Department, MIT School of Engineering, MIT ADT University,Loni Kalbhor, Pune, Maharashtra 412201 India Maharashtra India
(31) Priority Document No	:NA	**2)Shubhum Sham Bhorade**
(32) Priority Date	:NA	**3)Rushikesh Dattatray Gaikwad**
(33) Name of priority country	:NA	(72)**Name of Inventor :**
(86) International Application No	:NA	**1)Rajshekhar Gopal Rathod**
Filing Date	:NA	**2)Shubhum Sham Bhorade**
(87) International Publication No	: NA	**3)Rushikesh Dattatray Gaikwad**
(61) Patent of Addition to Application Number	:NA	
Filing Date	:NA	
(62) Divisional to Application Number	:NA	
Filing Date	:NA	

(57) Abstract :
Based on the various literature survey it is found that much research has been carried out on Waste Plastic and Crumb Rubber modified pavement separately, but not one researcher has explored the possibility of blending the Waste Plastic and Crumb Rubber together. Hence in this novel work we used their combination to find the maximum sustainable and stabilized blend to minimize the pollution effect and disposal of it. Waste Plastic and Crumb Rubber are a major threat to the environment as they are not naturally biodegradable and increases environmental pollution. Therefore, utilisation of these materials in Bituminous pavement can easily solve both the problems. The government of India has been looking for alternative methods of recycling them, so it can be easily used in road construction. The research fulfils the proposition. The novelty of this research was to devise a blend using Waste Plastic, Crumb Rubber, Bitumen and Aggregate for s more sustainability stabilization and durability by amplifying its utility. All the above stated objectives were achieved by performing a series of tests on Various blends stated as below. A. Blend of Bitumen and Aggregate without Waste Plastic and Crumb Rubber. B. Blend of Bitumen and Aggregate with 4% Waste Plastic as a partial replacement of Bitumen by the weight of it. C. Blend of Bitumen and Aggregate with 6% Waste Plastic as a partial replacement of Bitumen by the weight of it. D. Blend of Bitumen and Aggregate with 8%Waste Plastic as a partial replacement of Bitumen by the weight of it. E. Blend of Bitumen and Aggregate with 5% Crumb Rubber as a partial replacement of Aggregate by the weight of it. F. Blend of Bitumen and Aggregate with 10% Crumb Rubber as a partial replacement of Aggregate by the weight of it. G. Blend of Bitumen and Aggregate with 15% Crumb Rubber as a partial replacement of Aggregate by the weight of it. H. Blend of Bitumen and Aggregate with 4% Waste Plastic as a partial replacement of Bitumen by the weight of Bitumen and 5% Crumb Rubber by the weight of Aggregate. I. Blend of Bitumen and Aggregate with 6% Waste Plastic as a partial replacement of Bitumen by the weight of Bitumen and 5% Crumb Rubber by the weight of Aggregate. J. Blend of Bitumen and Aggregate with 8% Waste Plastic as a partial replacement of Bitumen by the weight of Bitumen and 5% Crumb Rubber by the weight of Aggregate. Various tests were performed in this research work such as Softening Point Test, Penetration Value Test, Ductility Test, Aggregate Impact Value Test, Aggregate Crushing Value Test, Los Angeles Abrasion Test, and Marshall Stability Test. It was found out that plastic can be used up to 6% by the weight of Bitumen, and Crumb Rubber by 5% by the weight of aggregate when Marshall Stability test was performed. During this novel research blend of both materials are used. It is found that J. Blend of Bitumen and Aggregate with 6% Waste Plastic as a partial replacement of Bitumen by the weight of Bitumen and 5% Crumb Rubber by the weight of Aggregate shows maximum stability by Marshall Stability Test. By using these blends/this blend, we observe maximum stability and sustainability in the constructed road. Furthermore, it also augments the imperviousness of bitumen, straightens out the issue of potholes. The pavement is more durable as it increases its load carrying capacity and reduces thermal cracking. Thus, employment of these blends/ this blend leads to consumption of waste plastic and crumb rubber, which not only solves the decomposition issues, but also moderates pollution By using this type of blend which shows maximum stability and sustainability the impervious property of the Bitumen gets increased by which the problem of potholes gets reduced. The pavement is more durable and it reduces thermal cracking and its load carrying capacity increases. Crumb Rubber is also a noise reducing Agent therefore noise pollution is also minimized. By using this blend the consumption of Waste Plastic and Crumb Rubber can be consumed in Road Construction which reduces the pollution effect and decomposition issue of it.

No. of Pages : 14 No. of Claims : 5

(12) PATENT APPLICATION PUBLICATION
(21) Application No.202121020394 A
(19) INDIA
(22) Date of filing of Application :04/05/2021
(43) Publication Date : 11/06/2021

(54) Title of the invention : A SYSTEM AND METHOD OF VIRTUAL LABORATORY THROUGH VIRTUAL REALITY AND PREDICTIVE ANALYSIS

(51) International classification	:G01N0021450000, G01N0035000000, G06F0003010000, G06F0008610000, B01L0001000000	(71)**Name of Applicant :** **1)Jay Gupta** Address of Applicant :Flat no 9 & 10,2 nd floor, F Bldg, Madhav Nagar, R.A.K Road, Wadala west, Mumbai. Maharashtra, India-400031. Maharashtra India **2)Harshada Gupta**
(31) Priority Document No	:NA	
(32) Priority Date	:NA	
(33) Name of priority country	:NA	
(86) International Application No	:NA	
Filing Date	:NA	
(87) International Publication No	: NA	
(61) Patent of Addition to Application Number	:NA	
Filing Date	:NA	
(62) Divisional to Application Number	:NA	
Filing Date	:NA	

(72)**Name of Inventor :**
1)Jay Gupta
2)Harshada Gupta

(57) Abstract :
A System and Method of Virtual laboratory through Virtual reality and Predictive Analysis • Accordingly, system and method of virtual laboratory (remote laboratory) through virtual reality and predictive analysis is disclosed. The student runtime application by using system of the invention, said student is required to download and install the runtime software to enable the execution of the virtual lab on the student's workstation followed by obtaining of Lab data and new simulation objects. lab or experiment data file may include virtual experiment objects, measuring objects, etc.... student may be required to read instructions and to write a set of modeled equations in an online workbook followed by electing, or the student may be required, to do one or more of the following: add objects to workspace from the toolbox, set or inspect properties of lab objects, and/or measuring object properties with measuring tools. Some or all of the results of the experiment may be recorded in the workbook and necessary calculation may be performed. Fig 1

No. of Pages : 33 No. of Claims : 10

(12) PATENT APPLICATION PUBLICATION
(21) Application No.202121020444 A
(19) INDIA
(22) Date of filing of Application :05/05/2021
(43) Publication Date : 11/06/2021

(54) Title of the invention : ARTIFICIAL INTELLIGENCE BASED SMART WI-FI MINIATURE CIRCUIT BREAKER

(51) International classification	:G06N0020000000, H04W0084120000, G06N0005020000, G06N0003080000, H01H0071080000
(31) Priority Document No	:NA
(32) Priority Date	:NA
(33) Name of priority country	:NA
(86) International Application No	:NA
Filing Date	:NA
(87) International Publication No	: NA
(61) Patent of Addition to Application Number	:NA
Filing Date	:NA
(62) Divisional to Application Number	:NA
Filing Date	:NA

(71)**Name of Applicant :**
1)SYMBIOSIS INSTITUE OF BUSINESS MANAGEMENT-PUNE SYMBIOSIS INTERNATIOPNAL(DEEMED UNIVERSITY)
Address of Applicant :SYMBIOSIS KNOWLEDGE VILLAGE, GRAM LAVAL, TAL MULSHI, PUNE, MAHARASHTRA, INDIA, PIN CODE:A 411 045 Maharashtra India
(72)**Name of Inventor :**
1)RAMAKRISHNAN RAMAN

(57) Abstract :
Abstract Smartphones which work on 3G, 4G, and 5G bands are fit with media players, cameras, email, and broadband internet, and they are also used to make calls. So, if a smartphone can handle all of these important tasks, why can't it be used to power a circuit breaker AI based sensing neural networks refers to a group of digital equipment with computing techniques that are based on artificial intelligence and are widely used in the field of informatics. However, applications based on these novel systems are continuously being created for use in engineering and digital computing. By using these systems and unleashing the power of AI based sensing neural networks, the sensing of fire and overheating of wires can be predicted and can they can used to turn ON and OFF using the smart phone.

No. of Pages : 19 No. of Claims : 6

(12) PATENT APPLICATION PUBLICATION
(21) Application No.202121020453 A
(19) INDIA
(22) Date of filing of Application :05/05/2021
(43) Publication Date : 11/06/2021

(54) Title of the invention : A PHYSIOTHERAPY DEVICE FOR A PATIENT SUFFERING FROM ORAL SUBMUCOUS FIBROSIS

(51) International classification	:A61K0048000000, A61N0005060000, A61N0001360000, A61K0031167000, A61H0023020000	(71)**Name of Applicant :** **1)DR. DEEPA JATTI PATIL** Address of Applicant :208/2, OFFICERS ENCLAVE, AIRFORCE STATION DARJIPURA, VADODARA-390020. Gujarat India
(31) Priority Document No	:NA	(72)**Name of Inventor :**
(32) Priority Date	:NA	**1)DR. DEEPA JATTI PATIL**
(33) Name of priority country	:NA	
(86) International Application No	:NA	
Filing Date	:NA	
(87) International Publication No	: NA	
(61) Patent of Addition to Application Number	:NA	
Filing Date	:NA	
(62) Divisional to Application Number	:NA	
Filing Date	:NA	

(57) Abstract :
ABSTRACT A device for a patient suffering from oral submucous fibrosis that can used in physiotherapy to increase the mouth opening in patients. Oral submucous fibrosis is a premalignant condition occurring due to chewing of areca nut and tobacco products. In severe cases the mouth opening reduces to less than 10 mmm causing difficulty in chewing food and hampering the quality of life. The device is placed between the patient's teeth and activated externally with the help of a single screw to gradually increase the mouth opening over time.

No. of Pages : 16 No. of Claims : 10

(12) PATENT APPLICATION PUBLICATION
(21) Application No.202121020593 A
(19) INDIA
(22) Date of filing of Application :06/05/2021
(43) Publication Date : 11/06/2021

(54) Title of the invention : USING CLASSIFIED TEXT AND DEEP LEARNING INTELLIGENT ALGORITHMS TO IDENTIFY RISK AND PROVIDE EARLY WARNING.

(51) International classification	:G06N0003040000, G06N0003080000, G06Q0010060000, G06N0020000000, G06K0009620000	(71)**Name of Applicant :** **1)Dr. Anita. K. Patil (HOD)** Address of Applicant :Department of Electronics and Telecommunications Engineering, Dr. Vithalrao Vikhe Patil College Of Engineering Ahmednagar- 414111, MH, India. Maharashtra India
(31) Priority Document No	:NA	**2)Sudan Jha (Professor)**
(32) Priority Date	:NA	**3)Dr. Aprna Tripathi**
(33) Name of priority country	:NA	**4)A. Vijaya Lakshmi (Associate Professor)**
(86) International Application No	:NA	**5)Dr. Shubhangi Digamber Chikte (Professor)**
Filing Date	:NA	**6)Prof (Dr.) Baswaraj Gadgay (Regional Director)**
(87) International Publication No	: NA	(72)**Name of Inventor :**
(61) Patent of Addition to Application Number	:NA	**1)Dr. Anita. K. Patil (HOD)**
Filing Date	:NA	**2)Sudan Jha (Professor)**
		3)Dr. Aprna Tripathi
(62) Divisional to Application Number	:NA	**4)A. Vijaya Lakshmi (Associate Professor)**
Filing Date	:NA	**5)Dr. Shubhangi Digamber Chikte (Professor)**
		6)Prof (Dr.) Baswaraj Gadgay (Regional Director)

(57) Abstract :
Using classified text and deep learning intelligent algorithms to identify risk and provide early warning. ABSTRACT Our Invention Using classified text and deep learning intelligent algorithms to identify highly risk and provide selected early warning is a Deep learning is used to identify specific, potential risks to an enterprise while such risks are still internal WI-FI, electronic communications. The invention is also to a system involves mining and using existing classifications of data to train more than one deep learning algorithms and then unique examining the internal electronic communications with the trained defined algorithm to generate a scored output that will enable enterprise personnel to be alerted to risks and take unique action in time to prevent the risks from resulting in harm to the enterprise or others. The invention is to a structured review of publications utilizing Deep Learning /machine learning methods to aid in engineering risk assessment and also a keyword search is performed to retrieve relevant articles from the databases of high Scopus and Engineering Village. The search results are filtered according to seven selection criteria and the filtering process resulted in the retrieval of one hundred and twenty-four relevant research content and the statistics based on different categories from the citation database is presented.

No. of Pages : 15 No. of Claims : 5

(12) PATENT APPLICATION PUBLICATION
(21) Application No.202121020748 A
(19) INDIA
(22) Date of filing of Application :07/05/2021
(43) Publication Date : 11/06/2021

(54) Title of the invention : MATHEMATICAL MODELLING AND SIMULATION USING REGRESSION ANALYSIS AND MACHINE LEARNING.

(51) International classification	:G06Q0050160000, G06Q0010060000, G05B0017020000, G06N0020000000, G06K0009620000
(31) Priority Document No	:NA
(32) Priority Date	:NA
(33) Name of priority country	:NA
(86) International Application No	:NA
Filing Date	:NA
(87) International Publication No	: NA
(61) Patent of Addition to Application Number	:NA
Filing Date	:NA
(62) Divisional to Application Number	:NA
Filing Date	:NA

(71)**Name of Applicant :**
1)Jyoti Atul Dhanke
Address of Applicant :(R) B-11, Swaranjali Society, Shivtirth Nagar Kothrud, Paud Road, Pune-411038, Maharashtra, India. (O) Bharati Vidyapeeth's College of Engineering Lavale, Pune Email: jyotidhanke@gmail.com Mobile:9850079005 Maharashtra India
2)Dr. Nilesh Mahajan
3)Suvarna Ranjeet Jagtap
(72)**Name of Inventor :**
1)Jyoti Atul Dhanke
2)Dr. Nilesh Mahajan
3)Suvarna Ranjeet Jagtap

(57) Abstract :
ABSTRACT Our Invention Mathematical Modelling and Simulation using Regression Analysis and Machine Learning is a of property valuation literature indicated that the vast majority of researchers and complex academics in the field of real estate are focusing on Mass Appraisals rather than on the further development of the existing valuation methods. The variety of mathematical models used within the field of Machine Learning, which are applied to real estate valuations with high accuracy and also the other hand it appears that professional valuers do not use these sophisticated models during daily practice rather they operate using the traditional five methods. The Department of Lands and Surveys in Cyprus recently published the property values for taxation purposes which were calculated by applying a hybrid model based on the Cost approach with the use of regression analysis in order to quantify the specific parameters of each property. the service life of a particular item such as a component section of a building, are mathematically modeled to construct an initial lifecycle condition relationship as condition index (CI) v. time and to update the model, empirical data may be input at any time.

No. of Pages : 20 No. of Claims : 7

(12) PATENT APPLICATION PUBLICATION
(21) Application No.202121020868 A
(19) INDIA
(22) Date of filing of Application :07/05/2021
(43) Publication Date : 11/06/2021

(54) Title of the invention : AN UNDERCUT ANCHOR SYSTEM FOR MECHANICALLY MOUNTING, SUPPORTING, AND HOLDING DRY-CLAD STONES ON BUILDING STRUCTURES.

(51) International classification	:E04F0013080000, E04F0013140000, F24D0003140000, F16B0013080000, E04B0001410000
(31) Priority Document No	:NA
(32) Priority Date	:NA
(33) Name of priority country	:NA
(86) International Application No	:NA
Filing Date	:NA
(87) International Publication No	: NA
(61) Patent of Addition to Application Number	:NA
Filing Date	:NA
(62) Divisional to Application Number	:NA
Filing Date	:NA

(71)**Name of Applicant :**
1)AUM ARTEMEC LLP
Address of Applicant :T5, QURESHI COMPOUND, CHINCHOLI ROAD, OFF MUMBAI-AHMEDABAD HIGHWAY, NAIGAON, VASAI - 421208, MAHARASHTRA-INDIA. Maharashtra India
(72)**Name of Inventor :**
1)SAILESH RAJNIKANT VORA
2)KENAR DILIP PATEL

(57) Abstract :
ABSTRACT Title: AN UNDERCUT ANCHOR SYSTEM FOR MECHANICALLY MOUNTING, SUPPORTING AND HOLDING DRY-CLAD STONES ON BUILDING STRUCTURES An undercut anchor system (50) for mechanically mounting, supporting, and holding dry-clad stones on building structures, comprising: a back clip (10) fitted in undercut (Uc) in dry-clad stone (S) by undercut fastener (12); a transome (20) tightened on the wall or ceiling for mounting of dry-clad stone panel/slab (S) by back clip (10) fixed therein; the profiles of back clip (10) and transome (20) are configured mutually complimentary for precise alignment thereof and substantially free of expansion force and stresses developed therein for securely supporting the stone panel/slab (S) on the building structure. The back clip (10) and transome (20) are made from virgin or recycles extruded aluminium sections, preferably aluminium alloy 6063 T6. The dry-clad stone panel/slab (S) fitted with back clip (10) can be mounted on the transome (20) fixed in the wall or ceiling by fasteners (F) either directly or indirectly via subframe (F) with brackets (B). FIGURE 3.

No. of Pages : 34 No. of Claims : 10

(12) PATENT APPLICATION PUBLICATION
(21) Application No.202121020905 A
(19) INDIA
(22) Date of filing of Application :07/05/2021
(43) Publication Date : 11/06/2021

(54) Title of the invention : STRENGTH AND DURABILITY PROPERTIES OF CONCRETE USING GROUNDNUT SHELL AS FINE AGGREGATE

(51) International classification	:C04B0040000000, C04B0103300000, C04B0018240000, C04B0111270000, G01N0033380000
(31) Priority Document No	:NA
(32) Priority Date	:NA
(33) Name of priority country	:NA
(86) International Application No	:NA
Filing Date	:NA
(87) International Publication No	: NA
(61) Patent of Addition to Application Number	:NA
Filing Date	:NA
(62) Divisional to Application Number	:NA
Filing Date	:NA

(71)**Name of Applicant :**
1)Mr. MILIND NANDKUMAR TELAVANE
Address of Applicant :HEAD OF DEPARTMENT CIVIL ENGINEERING SHIVAJIRAO S. JONDHLE POLYTECHNIC OPP. ASANGAON RAILWAY STATION ASANGAON, SHAHAPUR, DIST.THANE , MAHARASHTRA 421601 Maharashtra India
2)Dr. M P SURESHKUMAR
3)Dr. ASHOK KUMAR KOSHARIYA
4)Mr. D. ZUNAITHUR RAHMAN
5)Dr. A.ARAVINDAN
6)Mr.S.GUNASEKAR
7)Dr.N.RAMESH
8)Dr.S.RAMESH
9)S.RAGUNATH
10)Dr. PERVAZ AHMAD GANIE
(72)**Name of Inventor :**
1)Mr. MILIND NANDKUMAR TELAVANE
2)Dr. M P SURESHKUMAR
3)Dr. ASHOK KUMAR KOSHARIYA
4)Mr. D. ZUNAITHUR RAHMAN
5)Dr. A.ARAVINDAN
6)Mr.S.GUNASEKAR
7)Dr.N.RAMESH
8)Dr.S.RAMESH
9)S.RAGUNATH
10)Dr. PERVAZ AHMAD GANIE

(57) Abstract :
ABSTRACT STRENGTH AND DURABILITY PROPERTIES OF CONCRETE USING GROUNDNUT SHELL AS FINE AGGREGATE Concrete plays a prominent role in the construction industry. In the present scenario, there is a shortage of this material. In the current situation, there is a deficiency of this material. So there is a need to discover choices to supplant it in the solid. To beat the present circumstance, many byproducts which are accessible uninhibitedly like paper squander, red mud, rice husk and plastic squanders can be utilized. Among these, groundnut shell is one of the great waste materials accessible from the oil business. It tends to be broadly utilized for the substitution of fine total. This test examination was done to assess the strength and sturdiness properties of concrete, in which fine total was supplanted with groundnut shell with various rates of 0% to 20% at time frame, were performed. Concrete was clustered by weight on receiving a proportion of 1:1.35:2.52 of M30 grade concrete with water concrete proportion of 0.4. Solid shapes of 150—150—150mm, chambers of 150—300mm were utilized. These shapes, chambers and bars were tried for 7, 14 and 28 days and contrasted and regular cement and it is tracked down that 5% of groundnut shell as fine total substitution delivered better outcomes looking at traditional cement.. Durability properties also show better results at 5% comparing to the conventional concrete. .

No. of Pages : 30 No. of Claims : 8

(12) PATENT APPLICATION PUBLICATION
(21) Application No.202121020906 A
(19) INDIA
(22) Date of filing of Application :07/05/2021
(43) Publication Date : 11/06/2021

(54) Title of the invention : CONTACTLESS PALM VEIN BIOMETRIC AUTHENTICATION AND HEALTH MONITORING DEVICE.

(51) International classification	:G06K0009000000, A61B0005000000, A61B0005145500, G06F0021320000, A61B0005117000
(31) Priority Document No	:NA
(32) Priority Date	:NA
(33) Name of priority country	:NA
(86) International Application No	:NA
Filing Date	:NA
(87) International Publication No	: NA
(61) Patent of Addition to Application Number	:NA
Filing Date	:NA
(62) Divisional to Application Number	:NA
Filing Date	:NA

(71)**Name of Applicant :**
1)Anil Kumar Gupta
Address of Applicant :C-DAC Innovation Park, Sr. No.34/B/1, Panchavati, Pashan, Pune-411008, MH, India. E-mail: anilg@cdac.in Maharashtra India
2)Dr. Rachna Somkunwar (Associate Professor)
3)Amarjeet sharma
4)Priyanka Kakade
5)Aditya Gupta
6)Harsh Gupta
7)Pranjal Chinchwade
(72)**Name of Inventor :**
1)Anil Kumar Gupta
2)Dr. Rachna Somkunwar (Associate Professor)
3)Amarjeet sharma
4)Priyanka Kakade
5)Aditya Gupta
6)Harsh Gupta
7)Pranjal Chinchwade

(57) Abstract :
ABSTRACT Today, the novel COVID-19 pandemic has taken a significant toll on countries worldwide and impacted the lives and well-being of people across nations. At the moment, many countries have taken measures, some of them stringent, to slow down the spread of SARS-CoV-2, the virus that causes COVID19. The globe is buzzing with uncertainty as there is no cure found for this problem yet. The only way to tackle the novel Coronavirus is taking precautions. People can become infected by touching infected objects or surfaces, then touching their eyes, nose or mouth. This is why it is vital to avoid unnecessary contact and incur hygienic habits. Technology and innovation can propose a helping hand in the fight against this pandemic crisis. One such device is the Contactless Palm Vein Biometric Authentication and COVID-19 Symptom Monitoring Device. The palm vein pattern is a unique biometric identity of human beings that is also a safe and reliable biometric authentication technique. The significant advantage of the multimodal device is that it is contactless, which makes it hygienic and highly helpful in times of pandemic, such as the novel Coronavirus pandemic. We have also added the functionality of pulse oximeter and temperature detection in the system. In this system, we are focusing on the process of designing a palm vein biometrics system, pulse oximeter and temperature detector in a step-by-step manner.

No. of Pages : 19 No. of Claims : 6

(12) PATENT APPLICATION PUBLICATION
(21) Application No.202121020907 A
(19) INDIA
(22) Date of filing of Application :08/05/2021
(43) Publication Date : 11/06/2021

(54) Title of the invention : POINT TO POINT REGRESSION ANALYSIS BIG DATA USING MACHINE LEARNING.

(51) International classification	:G06N0020000000, G06F0017180000, G05B0013020000, G06N0003080000, G06Q0050180000
(31) Priority Document No	:NA
(32) Priority Date	:NA
(33) Name of priority country	:NA
(86) International Application No	:NA
Filing Date	:NA
(87) International Publication No	: NA
(61) Patent of Addition to Application Number	:NA
Filing Date	:NA
(62) Divisional to Application Number	:NA
Filing Date	:NA

(71)**Name of Applicant :**
1)Dr. R.N. Patil
Address of Applicant :A/5, Shivam Enclave, Near Rathi C.N.G., Pune - 411046, Maharashtra, India. Email: rajendrakumar.patil@bharatividyapeeth.edu Mobile:9822431072 Maharashtra India
2)Dr. Baljeet Kaur
3)Sunilkumar Rajaram Patil
4)Satish Tukaram Rathod
5)Dr. Gurusharan Kaur
6)Dr. Namrata Tripathi
7)Amruta Mayur Pasarkar
8)Leena Bharat Chaudhari
9)Swati Gopal Gawhale
10)Suvarna Ranjeet Jagtap AN INDIAN NATIONAL
11)Jyoti Atul Dhanke
(72)**Name of Inventor :**
1)Dr. R.N. Patil
2)Dr. Baljeet Kaur
3)Sunilkumar Rajaram Patil
4)Satish Tukaram Rathod
5)Dr. Gurusharan Kaur
6)Dr. Namrata Tripathi
7)Amruta Mayur Pasarkar
8)Leena Bharat Chaudhari
9)Swati Gopal Gawhale
10)Suvarna Ranjeet Jagtap AN INDIAN NATIONAL
11)Jyoti Atul Dhanke

(57) Abstract :
ABSTRACT Our Invention point to point regression analysis big data processing using machine learning is a stepwise complex regression analysis-based global big data processing method. The rapid pace of technological advances creates many difficulties for R&D practitioners in analyzing emerging technologies. Patent information analysis is an effective tool in this situation. Conventional patent information analysis has focused on the extraction of vacant, promising, or core technologies and the monitoring of technological trends and also the method includes the following steps: 1: collecting data of factory operation parameters. 2: numbering the collected operation parameters. The invention is also using some of the collected operation defined parameters as dependent variables (tx, ty, tz), using other operation fixed parameters as independent variables and writing linear equations, wherein the parameters are in a linear relationship. The invention is a method and system for providing big data analytics framework for predictive and qualitative predictive analysis for social application developers data scientists and system unique engineers without having technology specific programming experience. The invented the framework contains adapters for the software engineers to configure the big data hub, wherein these hardware/software engineers can easily share, defined store, process and predict unique functionalities with the set of data scientists and user interface (UI) developers.

No. of Pages : 19 No. of Claims : 5

(12) PATENT APPLICATION PUBLICATION
(19) INDIA
(22) Date of filing of Application :08/05/2021
(21) Application No.202121020951 A
(43) Publication Date : 11/06/2021

(54) Title of the invention : PLANT-IT

(51) International classification	:A01G0009020000, A47J0027210000, F24F0006000000, A47J0031200000, A01M0021040000	(71)**Name of Applicant :** **1)Mrs. Preethi Vijay Menon** Address of Applicant :Kairali Bangla, 236, E Ward, Tarabai Park, Kolhapur-416003 Maharashtra India (72)**Name of Inventor :** **1)Mrs. Preethi Vijay Menon**
(31) Priority Document No	:NA	
(32) Priority Date	:NA	
(33) Name of priority country	:NA	
(86) International Application No	:NA	
Filing Date	:NA	
(87) International Publication No	: NA	
(61) Patent of Addition to Application Number	:NA	
Filing Date	:NA	
(62) Divisional to Application Number	:NA	
Filing Date	:NA	

(57) Abstract :
APlanter device called as PLANT-IT 100, used for planting of indoor Plants comprising of a lid 101, a container called as main body 102 anda base for the main body 103. The Planter device called as PLANT-IT 100 which claimed in claim no 1, where in the lid 101 mounting on container called as main body 102, to cover the open top end of the Container used for pouring water into the container.The Planter device called as PLANT-IT 100 where in the container called as main body 102 placed on the base plate 103. Where in top end of the main body 102 is open ended for pouring water and bottom end of the container 102 is close ended and mounted on the base 103 to collect excess water.The Planter device called as PLANT-IT 100 where in the container called as main body 102 made by plurity of porous materials to achieve porosity for diffusion of water from the side wall of the container.The Planter device called as PLANT-IT 100 where in the outer side wall of the main body 102 made my micro structure 105 to hold seeds. The design of the serration permits anchoring of roots, permits proper aeration of the plants roots as well as provides a certain level of storage of water.The Planter device called as PLANT-IT 100 where in the process of making of main body 102 of the mixture of material used in such a right quantity and different steps which achieves adequate flow of water through the walls of the container, good capillary action to ensure adequate flow of water irrespective of the level of water in the container as well as provide adequate strength to the container to permit a certain level of mishandling during use and provide adequate strength to with stand the rigors of transportation during and after the manufacturing process till it is made available to the end user.The Planter device called as PLANT-IT 100 where in the container called as main body 102 on which epiphytic plants can be grown. The Planter device called as PLANT-IT 100 which is ecofrindly, safe for use and packaging is designed to withstand the rigors of normal handling during transportation to the end user. The process of making of device includes various steps viz. mixing, string, moulding, heating, firing and drying.

No. of Pages : 45 No. of Claims : 9

(12) PATENT APPLICATION PUBLICATION
(21) Application No.202121020999 A
(19) INDIA
(22) Date of filing of Application :10/05/2021
(43) Publication Date : 11/06/2021

(54) Title of the invention : PROCESS FOR IMPROVING MECHANICAL PROPERTIES OF IMPLEMENTS

(51) International classification	:B32B0021020000, G02F0001130000, B23P0015000000, C23C0008220000, A61C0008020000	(71)**Name of Applicant :** **1)SANDEEP HARISH DESHMUKH** Address of Applicant :C 404, SUN SATELLITE, SINHGAD ROAD, ANAND NAGAR, PUNE, MAHARASHTRA, INDIA-411051 Maharashtra India **2)DR. CHANDRASHEKHAR GOGTE**
(31) Priority Document No	:NA	
(32) Priority Date	:NA	(72)**Name of Inventor :**
(33) Name of priority country	:NA	**1)SANDEEP HARISH DESHMUKH**
(86) International Application No	:NA	**2)DR. CHANDRASHEKHAR GOGTE**
Filing Date	:NA	
(87) International Publication No	: NA	
(61) Patent of Addition to Application Number	:NA	
Filing Date	:NA	
(62) Divisional to Application Number	:NA	
Filing Date	:NA	

(57) Abstract :
ABSTRACT PROCESS FOR IMPROVING MECHANICAL PROPERTIES OF IMPLEMENTS A process for improving mechanical properties of implements 200 is disclosed. Accordingly, the preferred process for improving mechanical properties of implements 200 includes a first bionic surface development cycle 204, and a second bionic surface treatment cycle 208. The first cycle 204 includes steps 212 of cutting metal sheet, and then step 216 of rolling the cut sheet in accordance with the topology mimicked from the composite shape of culm leaf of a bamboo tree and buffalo hoof with a bionic surface pattern mimicked from a dung beetle head surface morphology to develop the bionic implement 100. The second step 208 of bionic treatment includes steps such as pre-heating 220, gas carburizing 224, case hardening 228, tempering 232 and coating 236 the bionic implement 100 for improving the mechanical properties of the bionic implement 100. FIG. 1 For Publication

No. of Pages : 20 No. of Claims : 5

(12) PATENT APPLICATION PUBLICATION
(21) Application No.202121021025 A
(19) INDIA
(22) Date of filing of Application :10/05/2021
(43) Publication Date : 11/06/2021

(54) Title of the invention : A MODIFIED BIODEGRADABLE ETHYLENE VINYL ACETATE FOAM AND A PROCESS FOR PREPARATION THEREOFF

(51) International classification	:C08J0009100000, C08K0005140000, A61K0033120000, C08K0009040000, A61K0008270000
(31) Priority Document No	:NA
(32) Priority Date	:NA
(33) Name of priority country	:NA
(86) International Application No	:NA
Filing Date	:NA
(87) International Publication No	: NA
(61) Patent of Addition to Application Number	:NA
Filing Date	:NA
(62) Divisional to Application Number	:NA
Filing Date	:NA

(71)**Name of Applicant :**
1)Dr. Gokul Jaywant Jorwekar
Address of Applicant :Pravara Institute of Medical Sciences (Deemed to be University)™s Dr. Balasaheb Vikhe Patil Rural Medical College, Loni, Tal. Rahata, Dist: Ahmednagar, Maharashtra, India Maharashtra India
2)Pravara Institute of Medical Sciences
3)Dr. Hemsing Kisan Rathod
4)Dr. Mohan Nagorao Pawar
(72)**Name of Inventor :**
1)Dr. Gokul Jaywant Jorwekar
2)Dr. Hemsing Kisan Rathod
3)Dr. Mohan Nagorao Pawar

(57) Abstract :
Disclosed is a modified biodegradable EVA Foam comprising of i) modified EVA copolymer in an amount of 58.7wt% & polyhydroxybutyrate in an amount of 39.8 wt%, ii) azodicarbonamide in an amount of 5 wt%, iii) dicumyl peroxide in an amount of 1.5 wt%, iv) calcium carbonate in an amount of 4 wt%, v) talcum powder in an amount of 6 wt%, vi) stearic acid in amount of 1.5 wt%, vii) zinc oxide in an amount of 3 wt%. Also provided is a process for preparing the modified biodegradable EVA Foam. Figure 1.

No. of Pages : 21 No. of Claims : 5

(12) PATENT APPLICATION PUBLICATION
(21) Application No.202121021150 A
(19) INDIA
(22) Date of filing of Application :10/05/2021
(43) Publication Date : 11/06/2021

(54) Title of the invention : A QUICK AND EFFECTIVE DISEASE PREDICTION AND TREATMENT SUGGESTION SYSTEM BASED ON MACHINE LEARNING

(51) International classification	:G16H0010600000, G06Q0050220000, G16H0050200000, G06F0016245700, G16H0010200000
(31) Priority Document No	:NA
(32) Priority Date	:NA
(33) Name of priority country	:NA
(86) International Application No	:NA
Filing Date	:NA
(87) International Publication No	: NA
(61) Patent of Addition to Application Number	:NA
Filing Date	:NA
(62) Divisional to Application Number	:NA
Filing Date	:NA

(71)**Name of Applicant :**
1)Mr. Rahul Bhaurao Diwate
Address of Applicant :Narshinha Saraswati Nagar,Near Rajiv Gandhi School,Gopal Nagar,Badnera Road,Amravati,444607. Email id : diwate.rahul@gmail.com Mobile No: 8087748493 Maharashtra India
2)Mr. Vijayendra Sanjay Gaikwad
3)Mrs. Mayura vishal shelke
4)Ms.Savita
5)Dr.Sandhya
6)Dr. K. V. Bindu
7)Ms. D. Nageswari
8)Ms. G. Geethamahalakshmi
9)Ms. SARITA SHANKARRAO CHAVHAN
10)Dr. Archana Chandrakant Lomte
11)Mrs.Varsha Rahul Dange
12)Ms. B. Nagasri
(72)**Name of Inventor :**
1)Mr. Rahul Bhaurao Diwate
2)Mr. Vijayendra Sanjay Gaikwad
3)Mrs. Mayura vishal shelke
4)Ms.Savita
5)Dr.Sandhya
6)Dr. K. V. Bindu
7)Ms. D. Nageswari
8)Ms. G. Geethamahalakshmi
9)Ms. SARITA SHANKARRAO CHAVHAN
10)Dr. Archana Chandrakant Lomte
11)Mrs.Varsha Rahul Dange
12)Ms. B. Nagasri

(57) Abstract :
Medical data is one of the precise type of data that is pervasive today and is utilized for a diversity of formal and informal determinations. Formal uses of medical data include electronic medical records (EMR) which are composed every time a patient visits her or his doctor, analysis of clinical data from various studies, and so on. Informal examples of medical data can include that kept by an individual to track weight, number of cigarettes smoked, number of alcoholic drinks consumed per week, and so on. Whatever the source of the data, the data is stored for current and future use. The stored medical data is used for research and analysis purposes and is utilized to deliver healthcare to an individual, to track incidence of various diseases and medical conditions, as well as to track the spread of infections, diseases, etc. This invention made to identify one or more records consuming a specific phenotype receiving a plurality of first records, wherein each first record is associated with one or more of a plurality of phenotypes. Machine learning method is employed to identify records. Based on the detection of records, system predicts the diseases and suggest relevant treatments

No. of Pages : 14 No. of Claims : 3

(12) PATENT APPLICATION PUBLICATION
(21) Application No.202122012264 A
(19) INDIA
(22) Date of filing of Application :22/03/2021
(43) Publication Date : 11/06/2021

(54) Title of the invention : BIOSENSOR FOR DETECTION OF ANALYTES IN A FLUID

(51) International classification	:G01N0033543000, B01L0003000000, C12Q0001000000, A61B0005000000, F28F0003020000
(31) Priority Document No	:NA
(32) Priority Date	:NA
(33) Name of priority country	:NA
(86) International Application No	:NA
Filing Date	:NA
(87) International Publication No	: NA
(61) Patent of Addition to Application Number	:NA
Filing Date	:NA
(62) Divisional to Application Number	:201821048976
Filed on	:24/03/2019

(71)**Name of Applicant :**
1)BALDWA, Mehul
Address of Applicant :14 Shikshak Nagar, Aerodrome Road, Indore - 452005, Madhya Pradesh, India. Madhya Pradesh India
(72)**Name of Inventor :**
1)BALDWA, Mehul

(57) Abstract :
The present disclosure relates to a biosensor 100 for detecting analytes present in the fluid. The biosensor 100 includes one or more plates (114-1 to 114-L) configured on a substrate 102 to form at least one channel (104-1 to 104-M) such that one or more containment chambers (106-1 to 106-N) are formed in the channels. The channels (104-1 to 104-M) are mechanically separated from each other by spacers (110), and the containment chambers (106-1 to 106-N) are fluidically separated from adjacent chamber by a discontinuity (108) such that the fluid flows between adjacent chambers only after an application of a predefined pressure on the plate. The multiple chambers (106-1 to 106-N) allows the fluid to undergo pre-processing using different set of reagents provided at different chambers, to mitigate effects of interferents and to efficiently distribute load of the reagents on the chambers (106-1 to 106-N). Further, some of containment chambers allows detection of analytes in the fluid using detection reagents.

No. of Pages : 50 No. of Claims : 6

(12) PATENT APPLICATION PUBLICATION
(19) INDIA
(22) Date of filing of Application :03/04/2021
(21) Application No.202124015840 A
(43) Publication Date : 11/06/2021

(54) Title of the invention : COMBINATION BROAD-SPECTRUM ANTIVIRAL NATURAL EXTRACT SUPPLEMENTS

(51) International classification	:A23L0021250000, A01N0025340000, A61K0031700000, A23K0010330000, A23L0002520000
(31) Priority Document No	:63/100,924
(32) Priority Date	:08/04/2020
(33) Name of priority country	:U.S.A.
(86) International Application No	:NA
Filing Date	:NA
(87) International Publication No	: NA
(61) Patent of Addition to Application Number	:NA
Filing Date	:NA
(62) Divisional to Application Number	:NA
Filing Date	:NA

(71)**Name of Applicant :**
1)Mark Edward Fenzl
Address of Applicant :3734, Breezemont Drive, Sarasota, Florida, 34232, U.S.A. U.S.A.
(72)**Name of Inventor :**
1)Mark Edward Fenzl

(57) Abstract :
The present technology may include combining different non-synthetic products to form a broad-spectrum antiviral supplement that inhibit or kill viruses. The antiviral supplement can be added to a shake, juice, or food to include antiviral properties. In one embodiment, the supplement may be configured to be admixed in the product. The product may include at least four ingredients selected from a first group, a second group, and a third group. In particular, the supplement may include at least four ingredients with two ingredients selected from the first group. Sweeteners including honey, artificial honey, molasses, or syrup combined with natural preservatives can also be used to provide broad-spectrum antiviral protection.

No. of Pages : 17 No. of Claims : 15

(12) PATENT APPLICATION PUBLICATION
(21) Application No.202041016711 A
(19) INDIA
(22) Date of filing of Application :17/04/2020
(43) Publication Date : 11/06/2021

(54) Title of the invention : A HEALTH ASSESSMENT SMART PHONE TOOL TOWARDS COMPREHENSIVE AND NON-INVASIVE EARLY STAGE DETECTION OF CORONAVIRUS INFECTION

(51) International classification	:A61B0005000000, A61B0005024000, A61B0005145500, A61B0005020500, A61B0005021000
(31) Priority Document No	:NA
(32) Priority Date	:NA
(33) Name of priority country	:NA
(86) International Application No	:NA
Filing Date	:NA
(87) International Publication No	: NA
(61) Patent of Addition to Application Number	:NA
Filing Date	:NA
(62) Divisional to Application Number	:NA
Filing Date	:NA

(71)**Name of Applicant :**
1)Acculi Labs Private Limited
Address of Applicant :31 Ground Floor, 3rd Cross Basappa Layout, Near BHEL Water Tank, Pattangere, Raja Rajeshwari Nagar, Bengaluru, Karnataka Karnataka India
(72)**Name of Inventor :**
1)Rupam Das

(57) Abstract :
Abstract The present invention provides an efficient system and process for non-invasive early stage detection of Coronavirus Infection and monitoring thereof. A non-invasive and comprehensive around the clock detection of Coronavirus Infection by capturing arterial pulse from finger capillaries and using light reflection processing from smart phone camera to find major part of Coronavirus decision marker known as Peripheral Capillary Oxygen Saturation (spO2) • even from hypoxia patients. The present invention utilizes the principle of Photoplethysmography • (PPG), science of Diabetic Cardiovascular Autonomic Neuropathy • , science of Heart Rate Variability (HRV) • and glucose metabolism to estimate overall health status of the people. The present invention makes it easier for clinicians to detect the diseases at the early stage and helps the patients to monitor their progress. It offers a set of various functional biomarkers, which are correlated to various asymptomatic conditions related to various diseases. The overall efficiency of the present invention is 90.72%.

No. of Pages : 43 No. of Claims : 9

(12) PATENT APPLICATION PUBLICATION
(19) INDIA
(22) Date of filing of Application :22/04/2020
(21) Application No.202041017359 A
(43) Publication Date : 11/06/2021

(54) Title of the invention : AN HERBICIDE COMPOSITION AND A PROCESS OF PREPARATION THEREOF

(51) International classification	:B01J0029140000, C10M0125120000, A01N0057280000, C08F0004340000, A61K0031265000
(31) Priority Document No	:NA
(32) Priority Date	:NA
(33) Name of priority country	:NA
(86) International Application No	:NA
Filing Date	:NA
(87) International Publication No	: NA
(61) Patent of Addition to Application Number	:NA
Filing Date	:NA
(62) Divisional to Application Number	:NA
Filing Date	:NA

(71)**Name of Applicant :**
1)M/S TAGROS CHEMICALS INDIA PVT. LTD
Address of Applicant :JHAVER CENTRE, RAJAH ANNAMALAI BUILDING, 4TH FLOOR, 72 MARSHALLS ROAD, EGMORE, CHENNAI 600008, India Tamil Nadu India
(72)**Name of Inventor :**
1)SRIKRISHNAN, Rajaiah
2)SREEDHAR, Chemuturi
3)BOSE, Abhijit
4)PICHUMANI, Narayanamoorthy

(57) Abstract :
AS ATTACHED

No. of Pages : 140 No. of Claims : 20

(12) PATENT APPLICATION PUBLICATION
(19) INDIA
(22) Date of filing of Application :10/06/2020
(21) Application No.202041024382 A
(43) Publication Date : 11/06/2021

(54) Title of the invention : AN ALL-TERRAIN UTILITY VEHICLE AND METHODS THEREOF

(51) International classification	:G05D0001020000, A01B0069000000, B60C0001000000, G06F0001240000, B60F0003000000
(31) Priority Document No	:NA
(32) Priority Date	:NA
(33) Name of priority country	:NA
(86) International Application No	:NA
Filing Date	:NA
(87) International Publication No	: NA
(61) Patent of Addition to Application Number	:NA
Filing Date	:NA
(62) Divisional to Application Number	:NA
Filing Date	:NA

(71)**Name of Applicant :**
1)Mahindra & Mahindra Limited
Address of Applicant :Mahindra Research Valley, Mahindra World City, Plot No: 41/1, Anjur P.O. , Chengalpattu, Kanchipuram District, Tamilnadu 603004 India Tamil Nadu India

(72)**Name of Inventor :**
1)VARADA PRASHANT RAO
2)SHANKAR VENUGOPAL
3)SAYANTAN MUKHERJEE
4)RAM MOHAN SITARAMAN
5)SIDDHARTHA RAJ
6)Ms. SNIGDHARANI EPARI
7)DEEPAK SAINI
8)Ms. ABHISHANSHA GAUTAM
9)HARSH PATEL
10)SRINIVAS KANNAN

(57) Abstract :
AN ALL-TERRAIN UTILITY VEHICLE AND METHODS THEREOF The disclosures herein generally relate to a vehicle and more particularly, to an all-terrain utility vehicle which can perform multiple operations, in varied terrain and soil conditions, with precision and guidance. An all-terrain utility vehicle (10) mainly includeswheel track and wheel base adjusting system (100), a height adjusting system (200), a plurality of vertical axle assemblies (300), a steering system (400), an implement position adjusting system (700), a master controller unit (802) and a plurality of wheel drive motors (1200). All the vehicle functions being controlled and guided with the help of an electronic master control module which enables optional manual, remote and autonomous operations. The electronic master control module utilizes externally acquired location data and digital maps with soil and plant information for enabling precision field operations. Fig. 1

No. of Pages : 108 No. of Claims : 38

(12) PATENT APPLICATION PUBLICATION
(21) Application No.202041026785 A
(19) INDIA
(22) Date of filing of Application :24/06/2020
(43) Publication Date : 11/06/2021

(54) Title of the invention : A PORTABLE OXYGEN GENERATOR SYSTEM

(51) International classification	:A61M0016100000, A62B0021000000, A61M0016000000, A62B0007020000, A62B0007080000
(31) Priority Document No	:NA
(32) Priority Date	:NA
(33) Name of priority country	:NA
(86) International Application No	:NA
Filing Date	:NA
(87) International Publication No	: NA
(61) Patent of Addition to Application Number	:NA
Filing Date	:NA
(62) Divisional to Application Number	:NA
Filing Date	:NA

(71)**Name of Applicant :**
1)O2-Matic Products Private Limited
Address of Applicant :B450 Mahaveer Tuscan Apartment, Basavanagar Road, Bangalore 560048 Karnataka India
(72)**Name of Inventor :**
1)John Paul Thambusami Joy Sachidanadam

(57) Abstract :
A PORTABLE OXYGEN GENERATOR SYSTEM ABSTRACT A cartridge system (20) comprising a container (30) and at least four cartridges (70) for generating oxygen, a compressor (190) for compressing the generated oxygen, at least one storage tank (200) configured to store the compressed oxygen received from the compressor (190), an oxygen pressure regulator (210) enabling a uniform flow of oxygen at pre-defined oxygen pressure, an oxygen flow control knob (240) regulating flow ratio of the oxygen being supplied to the patient in an instant, a humidifier means (230) imparting humidity to the oxygen being supplied to a patient, and a display unit displaying a set of information associated with the system and communicatively coupled to the portable oxygen generator system (10) via wireless network. The cartridge(s) may be triggered in a plurality of ways to maintain a continuous outflow of generated oxygen for a longer duration. Further, the operation of the system may be monitored or controlled wirelessly from a distant location. . FIG. 4

No. of Pages : 32 No. of Claims : 17

(12) PATENT APPLICATION PUBLICATION
(19) INDIA
(22) Date of filing of Application :13/07/2020
(21) Application No.202041029619 A
(43) Publication Date : 11/06/2021

(54) Title of the invention : AUTOMATED BELT WRAPPING MACHINE AND METHOD THEREOF

(51) International classification	:D06F0033000000, H01B0013260000, B65B0011020000, H01B0007295000, H01B0013100000
(31) Priority Document No	:NA
(32) Priority Date	:NA
(33) Name of priority country	:NA
(86) International Application No	:NA
Filing Date	:NA
(87) International Publication No	: NA
(61) Patent of Addition to Application Number	:NA
Filing Date	:NA
(62) Divisional to Application Number	:NA
Filing Date	:NA

(71)**Name of Applicant :**
1)J.K. FENNER (INDIA) LIMITED
Address of Applicant :480, Anna Salai, 5th Floor, Khivraj Complex Phase II, Nandanam, Chennai Tamil Nadu India
(72)**Name of Inventor :**
1)M. NAGARAJAN
2)N. KARTHIK

(57) Abstract :
The present invention generally relates to the field of machine automation. The present invention particularly relates to automated wrapping machine. The automated belt wrapping machine comprises of a vertical loader unit, a wrapping unit, a jacket feeder unit, a belt unloading unit, two or more servomotors [2.6], one or more sensors, one or more actuators, operator / user interface and one or more pneumatic cylinders [11]. Further the present invention relates to a method of working of the automated wrapping machine. Advantageously, the present invention can be utilized to wrap a fabric around the belt with automated overlap control. FIGURE 3.

No. of Pages : 46 No. of Claims : 23

(12) PATENT APPLICATION PUBLICATION
(21) Application No.202041030027 A
(19) INDIA
(22) Date of filing of Application :15/07/2020
(43) Publication Date : 11/06/2021

(54) Title of the invention : SECURITY FEATURED SOFTWARE DEFINED UNMANNED WIRELESS SENSING NODE

(51) International classification	:H04W0084180000, G01V0001180000, H02J0007320000, G08B0013000000, A45C0013180000
(31) Priority Document No	:NA
(32) Priority Date	:NA
(33) Name of priority country	:NA
(86) International Application No	:NA
Filing Date	:NA
(87) International Publication No	: NA
(61) Patent of Addition to Application Number	:NA
Filing Date	:NA
(62) Divisional to Application Number	:NA
Filing Date	:NA

(71)**Name of Applicant :**
1)Dr. P. MOHANA PRIYA
Address of Applicant :No. 2, Kannagi Street, Muthamiz Nagar, Eswari Nagar, Medical College Road, Near Amirtha Ladies Hostel, Thanjavur Tamil Nadu India
(72)**Name of Inventor :**
1)Dr. P. MOHANA PRIYA

(57) Abstract :
The present invention relates to a situation aware software defined unmanned wireless sensor nodes to be deployed sensitive installations where security considered as primary priority, more particularly the said sensor nodes to be embodied with an intelligent cryptography technique to secure the data in real time, comprises a plurality of wireless sensor node [120], said wireless sensor node, comprises a functional microcontroller [100] built-in with a communication module [109]; a serial flash memory [110]; and a battery unit [111]. Said wireless sensor node [120] functionally provisioned to have a data-control and a control-application plane referred as open-flow protocol interface that differentiates the software basis of cryptography algorithm and data related, thus ensures the optimum utilization of memory space and also functional efficiency of the microcontroller with minimum complexity involved.
FIGURE 1

No. of Pages : 19 No. of Claims : 8

(12) PATENT APPLICATION PUBLICATION
(21) Application No.202041030593 A
(19) INDIA
(22) Date of filing of Application :17/07/2020
(43) Publication Date : 11/06/2021

(54) Title of the invention : SYSTEM FOR MANUFACTURING OF POWER TRANSMISSION BELT AND METHOD THEREOF

(51) International classification	:H01L0029660000, F16G0005200000, F16G0001100000, H02J0005000000, F16G0001280000
(31) Priority Document No	:NA
(32) Priority Date	:NA
(33) Name of priority country	:NA
(86) International Application No	:NA
Filing Date	:NA
(87) International Publication No	: NA
(61) Patent of Addition to Application Number	:NA
Filing Date	:NA
(62) Divisional to Application Number	:NA
Filing Date	:NA

(71)**Name of Applicant :**
1)J.K. FENNER (INDIA) LIMITED
Address of Applicant :480, Anna Salai, 5th Floor, Khivraj Complex Phase II, Nandanam, Chennai Tamil Nadu India
(72)**Name of Inventor :**
1)P.G.S. SELVAN DINESH DAVIDSON
2)M. NAGARAJAN
3)M. PANDY
4)G. RAJASEKAR
5)A. DAVID MELCHI MESHACH

(57) Abstract :
The present invention relates to power transmission belt. More particularly, the present invention relates to a system/equipment for manufacturing of power transmission belt particularly endless wrapped V belt. The system for manufacturing of wrapped power transmission belt comprises of component assembly, fabric frictioning assembly, and curing machine assembly. The consolidated system for manufacturing of the wrapped power transmission belt comprises of an extruder [150], a take-away conveyor [151], a dancing arm [152], geometric inspection [153], a coolant tank [154], an air blower [155], online weigher [156], a paint marking [157], a dancing arm [158], a haul-off unit [159], a conveyor [160], a swing conveyor [161] and a drum building station [162]. Further the present invention relates to a method of manufacturing of power transmission belt. Advantageously the present invention relates to a single piece flow production method from rubber compound stage to finished product with machine automation. FIGURE 17.

No. of Pages : 78 No. of Claims : 42

(12) PATENT APPLICATION PUBLICATION
(19) INDIA
(22) Date of filing of Application :22/09/2020
(21) Application No.202041040957 A
(43) Publication Date : 11/06/2021

(54) Title of the invention : SYSTEM AND METHOD FOR DATA SECURITY AND SECURED AUTHENTICATION

(51) International classification	:G06Q0020400000, H04L0029060000, G06N0020000000, G06F0016951000, G06F0021620000
(31) Priority Document No	:NA
(32) Priority Date	:NA
(33) Name of priority country	:NA
(86) International Application No	:NA
Filing Date	:NA
(87) International Publication No	: NA
(61) Patent of Addition to Application Number	:NA
Filing Date	:NA
(62) Divisional to Application Number	:NA
Filing Date	:NA

(71)**Name of Applicant :**
1)CHETANA KOULAGI
Address of Applicant :C12, AJMERA VILLOWS, NEELADRI ROAD, ELECTRONIC CITY PHASE 1, BANGALORE, 560100, KARNATAKA, INDIA Karnataka India
(72)**Name of Inventor :**
1)CHETANA KOULAGI
2)NIKSHEP GRAMPUROHIT
3)SATISH GRAMPUROHIT
4)PRANJAL GRAMPUROHIT

(57) Abstract :
A system for data security and secured authentication is provided. The system includes a visual media receiving subsystem which receives multiple visual media. The system also includes an entity detection subsystem which detects for presence of entities. The system also includes an entity distinguishing subsystem which distinguishes the entities for being one of an image capturing lens or user(s) and counts the entities. The system also includes a learning subsystem which generates and updates a server with the training model in real-time. The system also includes a user authentication subsystem which authenticates the authorized user. The system also includes an event triggering subsystem which triggers an event on the authorized user device upon occurrence of one of the count of the user(s) is greater than unity, the entities include the image capturing lens, the authentication result includes a negative authentication result, identification of fraudulent activity, or a combination thereof. FIG. 1

No. of Pages : 28 No. of Claims : 10

(12) PATENT APPLICATION PUBLICATION
(21) Application No.202141007423 A
(19) INDIA
(22) Date of filing of Application :22/02/2021
(43) Publication Date : 11/06/2021

(54) Title of the invention : DIGITAL TWINS USING CONVOLUTIONAL NEURAL NETWORKS TO EMULATE DETAILED CONDITIONS WITHIN REPRESENTED PHYSICAL PROCESSES

(51) International classification	:G06N0003040000, G06F0111100000, G06N0003020000, G06F0017130000, G01N0033000000
(31) Priority Document No	:NA
(32) Priority Date	:NA
(33) Name of priority country	:NA
(86) International Application No	:NA
Filing Date	:NA
(87) International Publication No	: NA
(61) Patent of Addition to Application Number	:NA
Filing Date	:NA
(62) Divisional to Application Number	:NA
Filing Date	:NA

(71)**Name of Applicant :**
1)Ecole Centrale School of Engineering, Mahindra University
Address of Applicant :Ecole Centrale School of Engineering, Mahindra University , Survey No 62/1A, Bahadurpally, Hyderabad- 500043, Telangana, India Telangana India
(72)**Name of Inventor :**
1)Dr. Arya K. Bhattacharya

(57) Abstract :
ABSTRACT OF THE INVENTION DIGITAL TWINS USING CONVOLUTIONAL NEURAL NETWORKS TO EMULATE DETAILED CONDITIONS WITHIN REPRESENTED PHYSICAL PROCESSES Most sub-processes in industry, transportation, etc. are describable by approximate versions of the complete sets of partial differential equations that govern their underlying physics, hence their solution in real time will enable significantly superior and precise monitoring, control and prognostics of running processes. Arrays of sensors installed at the physical boundaries of process domains can provide the crucial inputs to ANN-like architectures that can transform these isolated values into detailed field conditions. Provided these ANN-like mechanisms can exhibit the following properties that they respond in process-real-time, their solutions are nearly as accurate as the offline numerical simulations of the governing equations from whose data they learn the functional relationships, and importantly, they can map a few score inputs into around two-orders-of-magnitude more number of outputs. This invention presents Convolutional-NN-like architectures based primarily on transpose convolutions and other design features that satisfy all the three crucial properties. Efficacy is demonstrated on two different, complex, application domains of the reduced Navier-Stokes equations. The invention can be applied to any operating process or dynamical system, to create a digital mockup that runs in parallel at a remote control location taking online sensor inputs and providing real time, accurate, comprehensive view of the internal dynamics of the system. Figure of Abstract: Fig. 1

No. of Pages : 32 No. of Claims : 8

(12) PATENT APPLICATION PUBLICATION
(21) Application No.202141014505 A
(19) INDIA
(22) Date of filing of Application :30/03/2021
(43) Publication Date : 11/06/2021

(54) Title of the invention : INTEGRATED HIGH PRESSURE WATER JET CLEANING APPARATUS IN AUTOMOBILE

(51) International classification	:B60S0003040000, B08B0003020000, C25B0009100000, B08B0009032000, G06Q0090000000
(31) Priority Document No	:NA
(32) Priority Date	:NA
(33) Name of priority country	:NA
(86) International Application No	:PCT//
Filing Date	:01/01/1900
(87) International Publication No	: NA
(61) Patent of Addition to Application Number	:NA
Filing Date	:NA
(62) Divisional to Application Number	:NA
Filing Date	:NA

(71)**Name of Applicant :**
1)Dr. Nagaswarupa H P
Address of Applicant :Associate Professor, Department of Studies in Chemistry, Shivagangothri, Davangere University, Davangere -577007 Karnataka India
2)Dr. Praveen Kumar M V
3)Dr. Rudresh M
(72)**Name of Inventor :**
1)Dr. Nagaswarupa H P
2)Dr. Praveen Kumar M V
3)Dr. Rudresh M
4)Mr. Manjunath T S
5)Dr. Veeresh Kumar G B
6)Dr. C S P Rao
7)Mr. Sevan Chandra M V
8)Mrs. Poornima J G

(57) Abstract :
The present invention relates to an apparatus used for the high pressure water jet cleaning apparatus used to clean / wash the vehicle. In general, proposed product is closest to the known product which is a standalone fixed or portable type. High pressure car washer which needs electrical power to operate and has to be carried separately. This standalone apparatus which costs huge money and to be connected to external electric source to run the apparatus which is a tedious work and costly too. Current invention focuses on the apparatus which is low cost and compact in nature and which is integrated with motor vehicle or motor boat and does not need any external source of electric power and can be connected directly to the engine drive to build the high pressure water jet for cleaning purpose of vehicles including 2W, 3W 4W, truck, buses and marine application. The proposed product is compact and has lower cost of ownership and ease of use as there is no need to carry the water jet washer separately. Apparatus can be used as integral to vehicle engine and does not need any external source of electric power. The proposed concept is readily available with low cost components and is easy to build and install. Hence the total cost of the product can be reduced.

No. of Pages : 8 No. of Claims : 3

(12) PATENT APPLICATION PUBLICATION
(21) Application No.202141014591 A
(19) INDIA
(22) Date of filing of Application :30/03/2021
(43) Publication Date : 11/06/2021

(54) Title of the invention : LOW COST SUNLIGHT HARVESTING SYTEM FOR RURAL INDOOR LIGHTING

(51) International classification	:F21S0009030000, F21S0011000000, F21S0019000000, A01N0043160000, F03C0001000000	
(31) Priority Document No	:NA	
(32) Priority Date	:NA	
(33) Name of priority country	:NA	
(86) International Application No	:PCT// /	
Filing Date	:01/01/1900	
(87) International Publication No	: NA	
(61) Patent of Addition to Application Number	:NA	
Filing Date	:NA	
(62) Divisional to Application Number	:NA	
Filing Date	:NA	

(71)**Name of Applicant :**
1)Dr. Praveen Kumar M V
Address of Applicant :N0.182, 10th cross Health layout, Bangalore-560091 Karnataka India
2)Dr. Rudresh M
3)Dr. Nagaswarupa H P
(72)**Name of Inventor :**
1)Dr. Rudresh M
2)Dr. Veeresh Kumar G B
3)Dr. Seenappa
4)Dr. Praveen Kumar M V
5)Mr. Manjunath T S
6)Mrs. Poornima J G
7)Mr. Sevan Chandra M V
8)Dr. Nagaswarupa H P

(57) Abstract :
The present invention relates to an low cost sunlight harvesting system for rural indoor lighting. India is facing a severe shortage of electricity. Key cities are down with 2-6 hour power cuts while rural India is facing the brunt of this outage with almost 10 hours of daily power cuts. Many would admit the obvious reason for this outage, amongst others, as the reduced availability of coal to generate electricity. 60% of India's electricity comes from coal. With growing uncertainty around the availability and cost of this fossil fuel, a number of power plants are having to run on low capacity and therefore the nation is power deprived. As long as India continues to depend on coal, we will continue to face more and more power outages across the country which will eventually disrupt our economy, our transport, our health services and slow down overall production. Coal, gas and oil will not be the three kinds of the energy world for ever, moreover Fossil fuels are dirty and the prices of the fossil fuels steeply increasing, so renewable are expected to play a key role to overcome the crisis of electricity. There is a high demand for electricity around the world and everyone is looking for renewable source for light. We have so many ways to generate the electricity like, tidal, geo thermal, nuclear, thermal, hydro and solar and among that solar is the highly renewable source what is available in the earth and India is sun's most favored nation. In India renewable energy has particular relevance in remote and rural areas where there are around 289 million people who don™t have an access to reliable sources of energy for light. Owing to this, Design and development of 24x7 lighting system has been arrived. In this system, the solar energy will be directly used to lighten the houses during daytime & solar powered lighting system will be used during night, This in turn helps to reduce the consumption of electrical energy and dependency on non renewable energy sources. The invention aimed at achieving the following objectives: 1.To develop a cost effective lighting system for rural 2.To utilize sunlight energy for lighting the house during day and night 3.To develop a reliable and environmental friendly product

No. of Pages : 11 No. of Claims : 3

(12) PATENT APPLICATION PUBLICATION
(21) Application No.202141014597 A
(19) INDIA
(22) Date of filing of Application :30/03/2021
(43) Publication Date : 11/06/2021

(54) Title of the invention : BAITING SCAM ATTACK DETECTION USING TWO WAY AUTHENTICATION BY ECC APPROACH

(51) International classification	:H04L0029060000, H04L0012580000, H04M0015100000, G06F0021550000, A01K0091180000
(31) Priority Document No	:NA
(32) Priority Date	:NA
(33) Name of priority country	:NA
(86) International Application No	:PCT//
Filing Date	:01/01/1900
(87) International Publication No	: NA
(61) Patent of Addition to Application Number	:NA
Filing Date	:NA
(62) Divisional to Application Number	:NA
Filing Date	:NA

(71)**Name of Applicant :**
1)Dr.J.JEAN JUSTUS
Address of Applicant :Associate Professor Department of Computer Science & Engineering St. Joseph's College of Engineering Old Mamallapuram Road Chennai Tamilnadu India 600119 Tamil Nadu India
2)Dr. UDHAYA SANKAR S.M
3)Dr.V.GOWRI
4)Dr. GANESAN R.
5)Dr. S. AHAMED ALI
6)Dr. R.THIAGARAJAN
7)Dr. S. ARUN
(72)**Name of Inventor :**
1)Dr.J.JEAN JUSTUS
2)Dr. UDHAYA SANKAR S.M
3)Dr.V.GOWRI
4)Dr. GANESAN R.
5)Dr. S. AHAMED ALI
6)Dr. R.THIAGARAJAN
7)Dr. S. ARUN

(57) Abstract :
To protect over the client side, the reliable way of approach has been initiated to detect over the unsolicited email messages and illegitimate web pages. To identify whether the web pages is legitimate and authenticated, the two way approach has been initiated. ECC approach generates and verifies over the key digitalized signature. Spam website has to be identified using two way of authentication (i.e. Host based authentication and web based authentication). Acknowledgement has to be given for every packet to analyze by providing personal protection to all Internet users whether the browser as any plug in. The website can be checked whether it is baiting scam target or genuine one by processing the two tier mechanism. Since, the security aspects gets increased the baiting scam attack over the messages such as email messages; SMS and MMS can be reduced.

No. of Pages : 14 No. of Claims : 8

(12) PATENT APPLICATION PUBLICATION
(21) Application No.202141015257 A
(19) INDIA
(22) Date of filing of Application :31/03/2021
(43) Publication Date : 11/06/2021

(54) Title of the invention : MACHINE LEARNING BASED IDENTIFICATION OF TUMOR USING SIANLM AND MFCM ALGORITHM FROM MRI BRAIN IMAGES

(51) International classification	:A61B0005000000, G06T0007000000, G06K0009620000, G16H0050200000, G01R0033560000
(31) Priority Document No	:NA
(32) Priority Date	:NA
(33) Name of priority country	:NA
(86) International Application No	:PCT//
Filing Date	:01/01/1900
(87) International Publication No	: NA
(61) Patent of Addition to Application Number	:NA
Filing Date	:NA
(62) Divisional to Application Number	:NA
Filing Date	:NA

(71)**Name of Applicant :**
1)Dr SALADI SARITHA
Address of Applicant :Associate Professor, Dept of ECE, Geethanjali College of Engineering and Technology, Hyderabad, Telangana-501301, India Telangana India
2)Dr SPANDANA PARAMKUSHAM
3)Dr S VALLI SREE
(72)**Name of Inventor :**
1)Dr SALADI SARITHA
2)Dr SPANDANA PARAMKUSHAM
3)Dr S VALLI SREE

(57) Abstract :
This invention is pertaining to detection of brain tumor provided MRI brain images as input. It realizes a framework with desired mechanisms and algorithms for automatic detection of brain tumors. Provided MRI images of brain as input, the framework has different algorithms to arrive at the tumor detection decision with higher level of accuracy. This invention has an improved FCM for soft clustering of MRI image data in order to identify tumors, with the help of feature extraction techniques to improve the performance by reducing computational and time complexity significantly. This invention is also equipped with a multi-model approach towards noise removal as part of SIANLM algorithm. Feature extraction with both PCA and DWT improves tumor detection accuracy. It provides solution to the problem of brain tumor detection with an automated approach that has utility and can be used in Clinical Decision Support Systems (CDSSs) in the real word to save the resources, energy and time of both patients and the clinicians. It benefits to many stakeholders such as patients, doctors, healthcare professionals, healthcare units, researchers and academia.

No. of Pages : 15 No. of Claims : 7

(12) PATENT APPLICATION PUBLICATION
(19) INDIA
(22) Date of filing of Application :01/04/2021
(21) Application No.202141015559 A
(43) Publication Date : 11/06/2021

(54) Title of the invention : SOLAR POWER ASSISTED VENTILATED FACE MASK WITH Y BONE SEPERATOR

(51) International classification	:A41D0013110000, A62B0023020000, A47C0007020000, A62B0009060000, A61K0009480000
(31) Priority Document No	:NA
(32) Priority Date	:NA
(33) Name of priority country	:NA
(86) International Application No	:NA
Filing Date	:NA
(87) International Publication No	: NA
(61) Patent of Addition to Application Number	:NA
Filing Date	:NA
(62) Divisional to Application Number	:NA
Filing Date	:NA

(71)**Name of Applicant :**
1) J E MOSHE DAYAN
Address of Applicant :57, DEVA SAHAYA NAGAR S.R. MILLS ROAD, DINDIGUL, TAMILNADU, INDIA, 624003 Tamil Nadu India
2)SUGANYA SRINIVASAN
3)ARUN PRASAD DEENADAYALAN
4)F X EDWIN DEEPAK
5)NIVETHA MARTIN
6)SHOWRILU KONDAVEETI
7)J. JOTHAM ROHIT
8)T ESTHER
(72)**Name of Inventor :**
1) J E MOSHE DAYAN
2)SUGANYA SRINIVASAN
3)ARUN PRASAD DEENADAYALAN
4)F X EDWIN DEEPAK
5)NIVETHA MARTIN
6)SHOWRILU KONDAVEETI
7)J. JOTHAM ROHIT
8)T ESTHER

(57) Abstract :
In the recent days, wearing masks is an extremely important habit that every one of us should be applying since this simple step could significantly reduce the risk of transmission of corona virus. The major problem identified on wearing a 3 or more layered mask, over a long period of time is suffocation, and that it creeps up especially when the user is continuous in physical work. The reason for the above statement is because one will re-inhale the exhaled air on wearing a highly protective multi layered mask and hence the continuous usage will result in suffocation and may also result in losing consciousness as the exhaled air, when re-enters the nostrils affects the respiratory system. Hence the present invention provides a simple solution to the existing problems that are available in wearing the face masks at the same time it also ensures absolute safety to the user in providing optimum safety in preventing microorganisms are bacteria and viruses entering and it primarily has all the multi layered protection like any other high end masks available in the market. The whole system is contemporary and works as an independent module and a user friendly equipment with all safety features ensured.

No. of Pages : 31 No. of Claims : 10

(12) PATENT APPLICATION PUBLICATION
(21) Application No.202141016712 A
(19) INDIA
(22) Date of filing of Application :09/04/2021
(43) Publication Date : 11/06/2021

(54) Title of the invention : SMART JACKET TO MAINTAIN SOCIAL DISTANCING

(51) International classification	:G06F0021560000, G06Q0050220000, G08B0021020000, A45C0013100000, C02F0101100000	(71)**Name of Applicant :** **1)Dr. Rashmi Priyadarshini B K** Address of Applicant :School of ECE, REVA University, Rukmini Knowledge Park, Kanigenahalli, Yelahanka, Bangalore, Karnataka, India 560064. Karnataka India
(31) Priority Document No	:NA	**2)M THIRUMAL ANAND**
(32) Priority Date	:NA	**3)KAUSHAL KALING**
(33) Name of priority country	:NA	**4)KEERTHI H V**
(86) International Application No	:NA	**5)MADHU CHANDRIKA B**
Filing Date	:NA	(72)**Name of Inventor :**
(87) International Publication No	: NA	**1)Dr. Rashmi Priyadarshini B K**
(61) Patent of Addition to Application Number	:NA	**2)M THIRUMAL ANAND**
Filing Date	:NA	**3)KAUSHAL KALING**
(62) Divisional to Application Number	:NA	**4)KEERTHI H V**
Filing Date	:NA	**5)MADHU CHANDRIKA B**

(57) Abstract :
The Covid-19 pandemic is tragedy that this generation is faced with, there isn't a stop for this, deadly virus just yet. That doesn't mean we fall victim to it, although travelling outside cannot be avoided completely we can take measures to prevent acquiring the virus. The World Health Organization recommends frequent sanitization of places of contact, temperature checks at regular intervals and most important of all Social Distancing i.e. to maintain at least 6-feet distance from surrounding population. This project is to aid this norm by creating, awareness to the user if a person doesn't follow social distancing protocol around said user and possibly stop the spread.

No. of Pages : 8 No. of Claims : 6

(12) PATENT APPLICATION PUBLICATION
(19) INDIA
(22) Date of filing of Application :17/04/2021
(21) Application No.202141017893 A
(43) Publication Date : 11/06/2021

(54) Title of the invention : A METHOD FOR EFFICIENT AND FASTER MACHINE LEARNING TECHNIQUE

(51) International classification	:G06N0020000000, G06F0030332300, G06F0016350000, G06K0009620000, A61B0017000000
(31) Priority Document No	:NA
(32) Priority Date	:NA
(33) Name of priority country	:NA
(86) International Application No	:PCT//
Filing Date	:01/01/1900
(87) International Publication No	: NA
(61) Patent of Addition to Application Number	:NA
Filing Date	:NA
(62) Divisional to Application Number	:NA
Filing Date	:NA

(71)**Name of Applicant :**
1)S GOKULAKRISHNAN
Address of Applicant :S/o. N SIVANANDHAM, DEPARTMENT OF COMPUTER SCIENCE AND ENGINEERING, SRI CHANDRASEKHARENDRA SARASWATHI VISWA MAHAVIDYALAYA [SCSVMV DEEMED TO BE UNIVERSITY], ENATHUR, KANCHIPURAM 631561, TAMIL NADU, INDIA. Tamil Nadu India
2)A R GURU GOKUL
3)N DEVI
4)P LEELA RANI
5)Dr. S SATHYA
6)Dr. C SUNITHA RAM
7)Dr. N KUMARAN
8)J SHYAM MOHAN
9)E PADMA
(72)**Name of Inventor :**
1)S GOKULAKRISHNAN
2)A R GURU GOKUL
3)N DEVI
4)P LEELA RANI
5)Dr. S SATHYA
6)Dr. C SUNITHA RAM
7)Dr. N KUMARAN
8)J SHYAM MOHAN
9)E PADMA

(57) Abstract :
The present invention depicts simple and efficient method for interactively learning non-binary concepts in the learning from random counter-examples (LRC) model. Here, learning takes place from random counter-examples that the learner receives in response to their proper equivalence queries, and the learning time is the number of counter-examples needed by the learner to identify the target concept. Such learning is particularly suited for online ranking, classification, clustering, etc., where machine learning models must be used before they are fully trained.

No. of Pages : 12 No. of Claims : 2

(12) PATENT APPLICATION PUBLICATION
(21) Application No.202141017970 A
(19) INDIA
(22) Date of filing of Application :19/04/2021
(43) Publication Date : 11/06/2021

(54) Title of the invention : FAST IMPROVED VEHICLE RECOGNITION TRACKING USING LPRS

(51) International classification	:G06K0009320000, G06K0009000000, G08G0001017000, G08G0001040000, G06K0009620000
(31) Priority Document No	:NA
(32) Priority Date	:NA
(33) Name of priority country	:NA
(86) International Application No	:NA
Filing Date	:NA
(87) International Publication No	: NA
(61) Patent of Addition to Application Number	:NA
Filing Date	:NA
(62) Divisional to Application Number	:NA
Filing Date	:NA

(71)**Name of Applicant :**
1)SATHYAPRAKASH B.P.
Address of Applicant :School of ECE, REVA University, Rukmini Knowledge Park, Kattigenathalli, Yelahanka, Bengaluru, Karnataka, Inda 560064. Karnataka India
2)PRATIK S. NILANGE
3)PRATHAB S
4)PRAJWAL P
5)MANOJ S. K
6)Dr. ROSHAN ZAMEER AHMED
(72)**Name of Inventor :**
1)SATHYAPRAKASH B.P.
2)PRATIK S. NILANGE
3)PRATHAB S
4)PRAJWAL P
5)MANOJ S. K
6)Dr. ROSHAN ZAMEER AHMED

(57) Abstract :
ABSTRACT: In every country, there is an evident increase in the number of vehicles on roads and this has become a major problem in traffic control, and vehicle owner identification. Sometimes it becomes difficult in identifying the vehicle number plates where the driver violates traffic and also drives very fast. However, though the vehicle checking system exists it has some faults such as leak checking, and false checking. Also, challenges arise due to the diversity of plate formats, character sizes, rotations, and illumination conditions often during the image acquisition. To avoid such a situation, an intelligent system for traffic surveillance is required where the system is built to meet the said requirements, and replace the traditional way of finding the theft vehicle or any vehicle blacklisted. The intelligent License Plate Recognition System (LPRS) detects the number of plates in the images captured by the camera, and also uses Optical Character Recognition (OCR) to recognize characters in the number plate. The system predicts the confidence of the algorithm enabling it to be smart and redundant free. Features such as Cloud & GPS functionalities are added value to the product by providing useful features to the user.

No. of Pages : 6 No. of Claims : 5

(12) PATENT APPLICATION PUBLICATION
(19) INDIA
(22) Date of filing of Application :20/04/2021
(21) Application No.202141018147 A
(43) Publication Date : 11/06/2021

(54) Title of the invention : WEB BLUEPRINT AND CODE CONSTRUCTION USING MACHINE INTELLIGENCE

(51) International classification	:G06N0003040000, G06K0009620000, G06N0003080000, G06Q0010060000, G06K0009000000
(31) Priority Document No	:NA
(32) Priority Date	:NA
(33) Name of priority country	:NA
(86) International Application No	:NA
Filing Date	:NA
(87) International Publication No	: NA
(61) Patent of Addition to Application Number	:NA
Filing Date	:NA
(62) Divisional to Application Number	:NA
Filing Date	:NA

(71)**Name of Applicant :**
1) Dr. N. SABIYATHFATIMA
Address of Applicant :DEPARTMENT OF COMPUTER SCIENCE ENGINEERING, B.S. ABDUR RAHMAN CRESCENT INSTITUTE OF SCIENCE AND TECHNOLOGY, VANDALUR, CHENNAI, TAMIL NADU, INDIA - 600 048. Tamil Nadu India
2)VISHAAL SARAVANAN
3)NIVETHA G
4)YASHWANTH RAJ V
5)ROOBESH BALAJI
6)MOHAMED ARSHAD S. S
(72)**Name of Inventor :**
1) Dr. N. SABIYATHFATIMA
2)VISHAAL SARAVANAN
3)NIVETHA G
4)ROOBESH BALAJI
5)MOHAMED ARSHAD S. S
6)YASHWANTH RAJ V

(57) Abstract :
Much foundational research and groundbreaking progress are witnessed throughout the field of deep learning, machine translation, and computer vision for automatic code generation. The efficient model generates simplistic web design templates by following architecture workflow from hand-drawn images. Developing web templates from hand-drawn illustrations ensures that static product web pages are created faster with minimal workers and much lesser cost. The model pipeline practices the word-embedding system obtained by long short-term memory (LSTM) for code fragments. Also, canny edge detection algorithm provided with VGG19 convolutional neural net (CNN) and attention-based LSTM for web template production. Selected features are concatenated, and a terminal LSTM with a SoftMax function is called for final prediction. The proposed model is verified with a benchmark based on the BLUE score, and performance enhancement is compared among the existing image generation algorithms.

No. of Pages : 18 No. of Claims : 4

(12) PATENT APPLICATION PUBLICATION
(21) Application No.202141018724 A
(19) INDIA
(22) Date of filing of Application :23/04/2021
(43) Publication Date : 11/06/2021

(54) Title of the invention : LOW EARTH ORBIT SATELLITE TRACKING USING AUTOMATED POSITIONING OF ANTENNA

(51) International classification	:H04N0021240000, H04W0024100000, F04B0017030000, H01Q0003080000, F16K0031040000	
(31) Priority Document No	:NA	
(32) Priority Date	:NA	
(33) Name of priority country	:NA	
(86) International Application No	:NA	
Filing Date	:NA	
(87) International Publication No	: NA	
(61) Patent of Addition to Application Number	:NA	
Filing Date	:NA	
(62) Divisional to Application Number	:NA	
Filing Date	:NA	

(71)**Name of Applicant :**
1) Dr M DEVANATHAN
Address of Applicant :SCHOOL OF ECE REVA UNIVERSITY, RUKMINI KNOWLEDGE PARK, KATTIGENAHALLI, YELAHANKA, BANGALORE, KARANATAKA, INDIA 560064. Karnataka India
2)SYED SAAD HUSSAIN
3)VINOD R
4)PRAVEEN KUMAR C
5)MOHAMMED RAHMATHULLA
(72)**Name of Inventor :**
1) Dr M DEVANATHAN
2)SYED SAAD HUSSAIN
3)VINOD R
4)PRAVEEN KUMAR C
5)MOHAMMED RAHMATHULLA

(57) Abstract :
' This is a device that monitors the satellite as it travels through space. It is necessary to monitor the satellite and position the antenna to face it in order to receive signals efficiently. The system is originally constructed such that we must have an initial time and a final time, so that the system-rotates from one location to another for the duration. It is necessary to feed both the initial and final positions. ' The stepper motor used can handle up to 4.2 kilogrammes. An arduino nanp is used to feed the path and steps to the motor driver. The stepper motor is controlled by the motor driver. The Real Time clock module keeps track of the time so that the stepper motor moves at the start time and stops at the end time. . ' By our model we have made it possible to maneuver the antenna from north tp south angles depending upon the satellite position in its orbit.

No. of Pages : 5 No. of Claims : 3

(12) PATENT APPLICATION PUBLICATION
(21) Application No.202141019042 A
(19) INDIA
(22) Date of filing of Application :26/04/2021
(43) Publication Date : 11/06/2021

(54) Title of the invention : IOT APPROACH TO SAVE LIFE USING GPS FOR THE TRAVELLER DURING AN ACCIDENT

(51) International classification	:G08B0025000000, G08B0025010000, G08B0025080000, G07C0005080000, A42B0003040000	(71)**Name of Applicant :** **1) DILNA U** Address of Applicant :SCHOOL OF ECE, REVA UNIVERSITY, RUKMINI KNOWLEDGE PARK, KATTIGENAHALLI, YELAHANKA, BANGALORE, KARNATAKA, INDIA - 560 064. Karnataka India
(31) Priority Document No	:NA	
(32) Priority Date	:NA	**2)ABHISHEK M**
(33) Name of priority country	:NA	**3)NOUMANA BEGUM**
(86) International Application No	:NA	**4)DUDEKULA ROSHNI**
Filing Date	:NA	**5)MANIK PRABHU**
(87) International Publication No	: NA	(72)**Name of Inventor :**
(61) Patent of Addition to Application Number	:NA	**1) DILNA U**
Filing Date	:NA	**2)ABHISHEK M**
		3)NOUMANA BEGUM
(62) Divisional to Application Number	:NA	**4)DUDEKULA ROSHNI**
Filing Date	:NA	**5)MANIK PRABHU**

(57) Abstract :
The main aim of the project is to design and develop a faster first aid service to the accident or in emergency conditions with the help of internet of things and GPS technologies. The rapid growth of technology and infrastructure has made our lives easier. The advent of technology has also increased the traffic hazards and the road accidents take place frequently which causes huge loss of life and property because of the poor emergency facilities. The accident detection project will provide an optimum solution to this drawback. 1R sensors can be used as a crash or rollover detector of the vehicle during and after a crash. With signals from an IR sensor, a severe accident due to an obstacle can be recognized. When a vehicle meets with an accident or if a car rolls over, the sensor detects the signal and immediately sends it to the microcontroller. Microcontroller sends the alert message through the GSM module including the location and driver ID details to the registered hospital or a rescue team. So the emergency help team can immediately trace the location through the GPS module, after receiving the information. The location can also be viewed on Google maps. After confirming the location necessary action is taken. This project is useful in detecting the accident precisely by means of IR sensors. Once a person ID is received via message hospital can login to cloud to know the details of the person like NAME: Blood group, previous health issues: family details, person insurance details and organ donation agreement details, using this details it is very easy to provide first AID to the accident or emergency patient.

No. of Pages : 5 No. of Claims : 3

(12) PATENT APPLICATION PUBLICATION
(21) Application No.202141019809 A
(19) INDIA
(22) Date of filing of Application :30/04/2021
(43) Publication Date : 11/06/2021

(54) Title of the invention : IOT BASED SMART ALARM SYSTEM TO MONITOR MEDICATION OF ELDERLY PEOPLE AND PATIENTS

(51) International classification	:H04L0029080000, G08B0025010000, G06F0008200000, A61J0007040000, G08B0021040000	(71)**Name of Applicant :** **1)BHARATHI S H** Address of Applicant :SCHOOL OF ECE REVA UNIVERSITY, RUKMINI KNOWLEDGE PARK, KATTIGENAHALLI, YELAHANKA, BANGALORE, KARNATAKA, INDIA - 560064. Karnataka India
(31) Priority Document No	:NA	
(32) Priority Date	:NA	**2)RASHMITHA R**
(33) Name of priority country	:NA	**3)SHREEVALLABHA A**
(86) International Application No	:NA	**4)SACHIN R**
Filing Date	:NA	**5)SHREYAS S**
(87) International Publication No	: NA	(72)**Name of Inventor :**
(61) Patent of Addition to Application Number	:NA	**1) BHARATHI S H**
Filing Date	:NA	**2)RASHMITHA R**
(62) Divisional to Application Number	:NA	**3)SHREEVALLABHA A**
Filing Date	:NA	**4)SACHIN R**
		5)SHREYAS S

(57) Abstract :
More than 15% of the world's population is constituted by elderly people leading to population ageing. In developing countries such as India, China etc., population ageing has become a major cause for increase in the death rate due to lack of self- care. In order to overcome these consequences an IOT based solution is implemented. Basically, IOT features connecting the real-world appliances and monitoring through the internet.This methodology is integrated in the custom alarm device to screen the medication of patients and elderly persons. The proposed model focuses on developing a portable application and an alarm device that is controlled by the application. The medications as per the prescription is sent via an android app to the device and the alert is set for the required time. Raspberry pi is used to accomplish the function of an alarm device. Firebase. is utilized as a primary platform in the application to serve as a cloud framework. Android app is used to serve the purpose of interaction with the device. Additionally, sensors such as temperature sensor and pulse rate sensor are used in the end device. The data from the sensor is automatically updated to the cloud and an alert is sent to the controller of the device via android app in the event of emergency.

No. of Pages : 5 No. of Claims : 5

(12) PATENT APPLICATION PUBLICATION
(21) Application No.202141019811 A
(19) INDIA
(22) Date of filing of Application :30/04/2021
(43) Publication Date : 11/06/2021

(54) Title of the invention : AN ADJUSTABLE DEVICE FOR MEASURING

(51) International classification	:A61B0017290000, G06T0011200000, A61L0031140000, G11C0016040000, G01N0033520000	(71)**Name of Applicant :** **1)Ms. AADHYA KRISHNA** Address of Applicant :NO. 206, HOYSALA, MILLERS TANK BUND ROAD, BANGALORE - 560052. Karnataka India (72)**Name of Inventor :** **1) Ms. AADHYA KRISHNA**
(31) Priority Document No	:NA	
(32) Priority Date	:NA	
(33) Name of priority country	:NA	
(86) International Application No	:NA	
Filing Date	:NA	
(87) International Publication No	: NA	
(61) Patent of Addition to Application Number	:NA	
Filing Date	:NA	
(62) Divisional to Application Number	:NA	
Filing Date	:NA	

(57) Abstract :
This invention relates to an adjustable device for measuring and more particularly to the simple push-pull mechanism to adjust the container space to the desired measurement. An objective of the present invention is to provide end user simplicity in measuring device rather having complex

No. of Pages : 21 No. of Claims : 9

(12) PATENT APPLICATION PUBLICATION
(21) Application No.202141019816 A
(19) INDIA
(22) Date of filing of Application :30/04/2021
(43) Publication Date : 11/06/2021

(54) Title of the invention : DESIGN AND IMPLEMENTATION OF PRIVATE CLOUD STORAGE FOR ORGANIZATION

(51) International classification	:H04L0029080000, G06F0016130000, G06F0016000000, G06F0021620000, G06F0040134000	(71)**Name of Applicant :** **1)Dr. BHARATHI S.H** Address of Applicant :SCHOOL OF ECE REVA UNIVERSITY, RUKMINI KNOWLEDGE PARK, KATTIGENAHALLI, YELAHANKA, BANGALORE, KARNATAKA, INDIA - 560064. Karnataka India
(31) Priority Document No	:NA	**2)VENKATESH T**
(32) Priority Date	:NA	**3)UJWALKUMAR**
(33) Name of priority country	:NA	**4)PRIYANKA PATIL**
(86) International Application No	:NA	**5)VIKAS NAIK**
Filing Date	:NA	(72)**Name of Inventor :**
(87) International Publication No	: NA	**1) Dr. BHARATHI S.H**
(61) Patent of Addition to Application Number	:NA	**2)VENKATESH T**
Filing Date	:NA	**3)UJWALKUMAR**
(62) Divisional to Application Number	:NA	**4)PRIYANKA PATIL**
Filing Date	:NA	**5)VIKAS NAIK**

(57) Abstract :
Cloud storage is file storage in the cloud (online). Instead of keeping your files on your local hard drive, external hard drive, or flash drive, you can save them online. There are multiple reasons to use cloud storage services. Maybe your local hard drives are running low on disk space, in which case you can use the cloud as extra storage. If you want to be able to stream your music collection from anywhere, access your work files at home, easily share vacation videos, etc., you can upload your files online to a cloud storage service. Another-reason to use cloud storage is if you want to keep important files secure behind a password and encryption. In short, cloud storage is helpful not only when it comes to backup but also for security and the ability to easily share files with others or access them yourself from anywhere: your phone, tablet, or another computer.

No. of Pages : 5 No. of Claims : 3

(12) PATENT APPLICATION PUBLICATION
(21) Application No.202141019819 A
(19) INDIA
(22) Date of filing of Application :30/04/2021
(43) Publication Date : 11/06/2021

(54) Title of the invention : FOOD WASTE MANAGEMENT USING MOBILE APPLICATION

(51) International classification	:A23L0033105000, G09B0019000000, A61K0038140000, A23L0023000000, B01D0061020000
(31) Priority Document No	:NA
(32) Priority Date	:NA
(33) Name of priority country	:NA
(86) International Application No	:NA
Filing Date	:NA
(87) International Publication No	: NA
(61) Patent of Addition to Application Number	:NA
Filing Date	:NA
(62) Divisional to Application Number	:NA
Filing Date	:NA

(71)**Name of Applicant :**
1)VASI HEMANTH
Address of Applicant :D17/1, KRISHNANAGAR, YERRAGUNTLA, KADAPA, ANDHRA PRADESH, INDIA, 516311 Andhra Pradesh India
2)VARSHINI V
3)VARSHA C S
4)JUPALLI BALAJI
5)NITYA S
(72)**Name of Inventor :**
1)VASI HEMANTH
2)VARSHINI V
3)VARSHA C S
4)JUPALLI BALAJI
5)NITYA S

(57) Abstract :
Majority of people stop thinking about it, when something is thrown away. Yet, food is a common item which is wasted daily. It is a growing evidence that a significant, share of global food is thrown away every single day. Wasting food has started happening decades ago, the contribution to stop and manage this problem is in everyone's hands. Reducing Food waste is a key sustainability challenge for every one globally .Despite of the issue, the link between innovation practices and food waste management has grabbed a little attention in the past few years. With the advancement in technology, the amount of food wasted globally can be reduced to a huge percent. Additionally hunger is also a major problem that is related to food waste. This paper explains about a vast range of food and hunger management initiatives, methods to solve this problem globally.

No. of Pages : 12 No. of Claims : 4

(12) PATENT APPLICATION PUBLICATION
(21) Application No.202141020063 A
(19) INDIA
(22) Date of filing of Application :01/05/2021
(43) Publication Date : 11/06/2021

(54) Title of the invention : LOW-COST FATIGUE TEST RIG

(51) International classification	:G01N0003320000, B23K0035260000, G01M0013000000, H04M0001180000, G01N0003340000
(31) Priority Document No	:NA
(32) Priority Date	:NA
(33) Name of priority country	:NA
(86) International Application No	:PCT// /
Filing Date	:01/01/1900
(87) International Publication No	: NA
(61) Patent of Addition to Application Number	:NA
Filing Date	:NA
(62) Divisional to Application Number	:NA
Filing Date	:NA

(71)**Name of Applicant :**
1)RAJESH S
Address of Applicant :ASSISTANT PROFESSOR, DEPARTMENT OF MECHANICAL ENGINEERING, R.M.K. ENGINEERING COLLEGE, R.S.M. NAGAR, KAVARAIPETTAI. Tamil Nadu India
(72)**Name of Inventor :**
1)PARTHEEBAN K
2)MADHANKUMAR S
3)RAMESH P
4)LOKESH KUMAR P J
5)Dr. S D SEKAR
6)SIVAKKUMAR G
7)RAJESH S

(57) Abstract :
Fatigue is important in as much as it is the single largest cause of failure in metals, estimated to comprise approximately 90% of all metallic failures; polymers and ceramics (except for glasses) are also susceptible to this type of failure. Furthermore, fatigue is catastrophic and insidious, occurring very suddenly and without warning. By carrying out this test, the material strength to be varied is determined. Fabricating the apparatus of fatigue test rig using an electric motor and load is given gradually to determine the fatigue strength of material.

No. of Pages : 6 No. of Claims : 4

(12) PATENT APPLICATION PUBLICATION
(21) Application No.202141020107 A
(19) INDIA
(22) Date of filing of Application :03/05/2021
(43) Publication Date : 11/06/2021

(54) Title of the invention : ATMOSPHERIC PARAMETER TRACKING CANSAT USING HAB

(51) International classification	:G06Q0030020000, B64G0001000000, B64G0005000000, B64B0001580000, B63B0022000000	(71)**Name of Applicant :** **1)AKASH G** Address of Applicant :# 1491 GURU KRUPA, FIRST MAIN ROAD, 2/A CROSS, KALYAN NAGAR, T.DASARAHALLI, BANGALORE, KARNATAKA, INDIA 560057. Karnataka India
(31) Priority Document No	:NA	**2)ASHWIN ALEX GEORGE**
(32) Priority Date	:NA	**3)ARJUN S**
(33) Name of priority country	:NA	**4)A G ANJU**
(86) International Application No	:NA	**5)Dr. DEVANATHAN M**
Filing Date	:NA	(72)**Name of Inventor :**
(87) International Publication No	: NA	**1) AKASH G**
(61) Patent of Addition to Application Number	:NA	**2)ASHWIN ALEX GEORGE**
Filing Date	:NA	**3)ARJUN S**
		4)A G ANJU
(62) Divisional to Application Number	:NA	**5)Dr. DEVANATHAN M**
Filing Date	:NA	

(57) Abstract :
Catching up to the frontier of space exploration requires tremendous resources, knowledge, and infrastructure. Therefore, space education is perceived as a process for accelerating space technology development. Most developed countries give priority to develop the literacy of space technology in their students in which the CanSat design is utilized as one tool to acquire an understanding of satellite operations. A CanSat is a simulation of a real satellite, integrated within the volume and shape of a soft drink can. The CanSat has constraints about dimensions, weight and expects an appropriate satellite design. The CanSat is then launched to an altitude of a few kilometres by a rocket or dropped from a platform or high-altitude balloon. The communication between the ground station and the CanSat should be achieved accurately for proper transmission and reception of data collected by using the Lora module. Lora is one of the technologies that have received significant attention by the research community in the recent years. LoRa (long range) Technology has revolutionized IoT (Internet of Things) by enabling data communication over a long range while using very low power and highly encrypted. We have chosen appropriatesensors for our CanSat keeping the cost, space, and effectiveness a . key factor by opting sensors with maximum functionality. The CanSat built can be launched and used to monitor local weather for an area, in an economical way, used as a tech-demonstrator.

No. of Pages : 8 No. of Claims : 6

(12) PATENT APPLICATION PUBLICATION
(19) INDIA
(22) Date of filing of Application :04/05/2021

(21) Application No.202141020282 A
(43) Publication Date : 11/06/2021

(54) Title of the invention : COMPARISON OF VARIOUS CLUSTERING TECHNIQUES IN VANETS

(51) International classification	:H04W0084180000, H04W0004460000, G01C0021260000, H04N0001333000, B60Q0009000000
(31) Priority Document No	:NA
(32) Priority Date	:NA
(33) Name of priority country	:NA
(86) International Application No	:NA
Filing Date	:NA
(87) International Publication No	: NA
(61) Patent of Addition to Application Number	:NA
Filing Date	:NA
(62) Divisional to Application Number	:NA
Filing Date	:NA

(71)**Name of Applicant :**
1)Chaitanya Nukala, Assistant professor/ Department of CSE, Rajeev Gandhi Memorial College of Engineering and Technology
Address of Applicant :Rajeev Gandhi Memorial College of Engineering and Technology, Nandyal, Kurnool, A.P-518501 Andhra Pradesh India
2)Dr.Nidamanuru Srinivasa Rao, Assistant Professor/ Department of CSE, Potti Sriramulu Chalavadi Mallikarjuna Rao College of Engineering and Technology
3)M.Amareswar, Assistant professor/ Department of CSE, Holy Mary Institute of Technology & Science
4).Venkata Ramana, Assistant professor/Department of CSE, Holy Mary Institute of Technology & Science
5)Aileni Eenaja, Assistant professor/ Department of CSE, Holy Mary Institute of Technology & Science
6)Sumayya Afreen, Assistant professor/ Department of CSE, Stanley College of Engineering and Technology for Women
7)Afreen Fatima Mohammed , Assistant professor/Department of IT, Stanley College of Engineering and Technology for Women
8)Amtul Sana Amreen, Assistant professor/Department of CSE, Stanley College of Engineering and Technology for Women
(72)**Name of Inventor :**
1)Chaitanya Nukala, Assistant professor/ Department of CSE, Rajeev Gandhi Memorial College of Engineering and Technology
2)Dr.Nidamanuru Srinivasa Rao, Assistant Professor/ Department of CSE, Potti Sriramulu Chalavadi Mallikarjuna Rao College of Engineering and Technology
3)M.Amareswar, Assistant professor/ Department of CSE, Holy Mary Institute of Technology & Science
4).Venkata Ramana, Assistant professor/Department of CSE, Holy Mary Institute of Technology & Science
5)Aileni Eenaja, Assistant professor/ Department of CSE, Holy Mary Institute of Technology & Science
6)Sumayya Afreen, Assistant professor/ Department of CSE, Stanley College of Engineering and Technology for Women
7)Afreen Fatima Mohammed , Assistant professor/Department of IT, Stanley College of Engineering and Technology for Women
8)Amtul Sana Amreen, Assistant professor/Department of CSE, Stanley College of Engineering and Technology for Women

(57) Abstract :
Abstract In recent years, there will be a fast expansion in numerous vehicles flying on road. The concentration will be to enhance the navigation standards & road security with assistance of ITS. There will be a requirement for new services & applications in environment of vehicle for comfort & safety. The technical advancement is improved to prevent collisions, to access uninterrupted internet facilities • , to foresee road accidents, to understanding road situations, to extent the capacity of storage, to expand the range of transmission, and to avoid the wireless links interference. The idea of this manuscript will be to enhance ITS to develop the safety of road & navigation procedure. There are numerous methods in n communication. The efficient & effective methods are enhanced to identify the conditions of road with the support of vehicular communication • . This manuscript provides the foundation of intelligent vehicle transport framework • . Different reviews on clustering, VANET modeling, & its based methods are deliberated. Followed by a survey of MAC protocols, hybrid cluster methods for VANET road security applications, multi-level & multi-hop broadcast protocol is examined.

No. of Pages : 12 No. of Claims : 5

(12) PATENT APPLICATION PUBLICATION
(21) Application No.202141020283 A
(19) INDIA
(22) Date of filing of Application :04/05/2021
(43) Publication Date : 11/06/2021

(54) Title of the invention : IMPLEMENTATION OF WOMEN SAFETY ELECTRONIC JACKET USING IOT

(51) International classification	:G08B0025010000, B60R0025102000, G08B0013140000, G08G0001000000, B60R0025250000
(31) Priority Document No	:NA
(32) Priority Date	:NA
(33) Name of priority country	:NA
(86) International Application No	:NA
Filing Date	:NA
(87) International Publication No	: NA
(61) Patent of Addition to Application Number	:NA
Filing Date	:NA
(62) Divisional to Application Number	:NA
Filing Date	:NA

(71)**Name of Applicant :**
1)A. Raganna
Address of Applicant :School of ECE, REVA University, Rukmini Knowledge Park, Kattigenahalli, Yelahanka, Bangalore, Karnataka, India 560064. Karnataka India
2)Bheemireddy Ekanth Reddy
3)Salla Tharakeswar Reddy
4)Talluri Nandini
5)Sri Krupa CH
6)Dr. Bharathi S.H
(72)**Name of Inventor :**
1)A. Raganna
2)Bheemireddy Ekanth Reddy
3)Salla Tharakeswar Reddy
4)Talluri Nandini
5)Sri Krupa CH
6)Dr. Bharathi S.H

(57) Abstract :
ABSTRACT: In today's world, women are feeling unsafe to travel alone whether it is a day or night. Now-a-days women are been attacked by men irrespective of their ages. Women are facing various problems which include robbery/theft, rape, molestation, eve-teasing and various other difficulties. The only thought haunting every girl is when they will . be able to move freely on the streets even in odd hours without worrying about their security. This project focuses on a security for women so that they will never feel . helpless. The system consists of various modules such as GSM, GPS, memory card, shock circuit, buzzer, camera, ESP 32 module. Today there are many cases which are happening about women. It is high time where women need a change. This project is based on women security where women feel protected. This paper describes about safety electronic jacket built for women. In public transport vehicles such as cars, buses and auto-rickshaws as nowadays women are being molested, kidnapped and harassed by the drivers. In each field there is a special impact of women like sports, dance, education, business, in politics also. Women are leading in each field. Are the girls in India are really safe Always we get the answer No. Hence implemented electronic system is fitted in the jacket which has GPS, GSM, Camera, Shock circuit, Buzzer, memory card, vibration sensor which are interfaced with ESP 32 board. This device helps the women in danger to be easily located with the help of global positioning system (GPS). Also messages and calls are given to alert their respective emergency contacts which are already stored in the microcontroller using global system for mobile communication (GSM). Hence this device serves handy when any women traveling outside feel insecure about her surroundings.

No. of Pages : 11 No. of Claims : 5

(12) PATENT APPLICATION PUBLICATION
(21) Application No.202141020323 A
(19) INDIA
(22) Date of filing of Application :04/05/2021
(43) Publication Date : 11/06/2021

(54) Title of the invention : TAMPERPROOF DELIVERY SYSTEM

(51) International classification	:H04L0029060000, A61M0015060000, G06Q0010080000, G07F0017120000, H04L0009320000
(31) Priority Document No	:NA
(32) Priority Date	:NA
(33) Name of priority country	:NA
(86) International Application No	:NA
Filing Date	:NA
(87) International Publication No	: NA
(61) Patent of Addition to Application Number	:NA
Filing Date	:NA
(62) Divisional to Application Number	:NA
Filing Date	:NA

(71)**Name of Applicant :**
1)Dr. THANGARAJA ARUMUGAM
Address of Applicant :4a/1, Rastha South Street, Melaseval, Tirunelveli 627452, Tamil Nadu, India Tamil Nadu India
2)Dr. S. SHAHUL HAMEED
3)Dr. R. ARUNA
4)Dr. J. BALAJI
5)VIGNESH KARTHIK S. A
(72)**Name of Inventor :**
1)Dr. THANGARAJA ARUMUGAM
2)Dr. S. SHAHUL HAMEED
3)Dr. R. ARUNA
4)Dr. J. BALAJI
5)VIGNESH KARTHIK S. A

(57) Abstract :
ABSTRACT TAMPERPROOF DELIVERY SYSTEM Disclosed is a tamperproof delivery system (100) for ensuring safe and allegation free delivery of articles to a customer, the system (100) comprising: a receptacle (102) configured to receive an article within, wherein the receptacle (102) comprises: a digital lock (200) embedded on the outer surface of the receptacle (102); a digital lock interface (202) configured to enable a user to enter a One-time Password (OTP) for unlocking the digital lock (200) of the receptacle (102) at the time of delivery; an emergency button (204) configured to unlock the digital lock (200) of the receptacle (102) in case the customer is unable to provide the One-time password; and a processing unit (206) connected to the digital lock (200), the digital lock interface (202), and the emergency button (204); a controller (110) in communication with the digital lock (200) of the receptacle (102) and a user device (106).

No. of Pages : 27 No. of Claims : 10

(12) PATENT APPLICATION PUBLICATION
(19) INDIA
(22) Date of filing of Application :04/05/2021
(21) Application No.202141020401 A
(43) Publication Date : 11/06/2021

(54) Title of the invention : AN AI BASED SYSTEM FOR GLUCOSE MONITORING AND DETERMINING COMPLIANCE

(51) International classification	:A61B0005145000, A61B0005000000, G06N0003080000, G06N0020000000, H04L0012260000
(31) Priority Document No	:NA
(32) Priority Date	:NA
(33) Name of priority country	:NA
(86) International Application No	:NA
Filing Date	:NA
(87) International Publication No	: NA
(61) Patent of Addition to Application Number	:NA
Filing Date	:NA
(62) Divisional to Application Number	:NA
Filing Date	:NA

(71)**Name of Applicant :**
1)Ms.M.Prabha
Address of Applicant :Assistant Professor Department of Electronics and Communication Engineering St.Joseph College of Engineering Sriperumbudur, Chennai -602 117 Tamil Nadu India
2)Ms.R.Bhavani
3)Dr. Manish Upadhyay
4)M.Vijayaragavan
5)Mrs.M.Devika Rani
6)Dr. T. Prasanth
7)Dr. S. Vijayalakshmi
8)Dr.S.Sharon Priya
9)Kakirala Durga Bhavani
10)Mr.A.Muthuraman
(72)**Name of Inventor :**
1)Ms.M.Prabha
2)Ms.R.Bhavani
3)Dr. Manish Upadhyay
4)M.Vijayaragavan
5)Mrs.M.Devika Rani
6)Dr. T. Prasanth
7)Dr. S. Vijayalakshmi
8)Dr.S.Sharon Priya
9)Kakirala Durga Bhavani
10)Mr.A.Muthuraman

(57) Abstract :
ABSTRACT AN AI BASED SYSTEM FOR GLUCOSE MONITORING AND DETERMINING COMPLIANCE [033] The present invention discloses an AI based system for glucose monitoring and determining compliance. The system includes, but not limited to, an artificial intelligence (AI) module for learning and determining on the basis of previous history after performing analytics, the amount of delivery of insulin and compliances for various diabetic conditions; a cloud server in conjunction with the artificial intelligence (AI) module to store and process the information and further send it to the user device and determining the compliance for various diabetic conditions and insulin dose; and a user device with a user interface to take input from the user and further display the output values. Accompanied Drawing [FIG. 1]

No. of Pages : 22 No. of Claims : 7

(12) PATENT APPLICATION PUBLICATION
(19) INDIA
(22) Date of filing of Application :04/05/2021
(21) Application No.202141020402 A
(43) Publication Date : 11/06/2021

(54) Title of the invention : LITHIUM-ION BATTERY RANGE AND SOC PREDICTION FOR ELECTRIC VEHICLE

(51) International classification	:H01M0010052500, H01M0004360000, G01R0031392000, G06N0003080000, H01M0002100000
(31) Priority Document No	:NA
(32) Priority Date	:NA
(33) Name of priority country	:NA
(86) International Application No	:NA
Filing Date	:NA
(87) International Publication No	: NA
(61) Patent of Addition to Application Number	:NA
Filing Date	:NA
(62) Divisional to Application Number	:NA
Filing Date	:NA

(71)**Name of Applicant :**
1)Dr. John Chembukkavu
Address of Applicant :Head of the department , Department of Electrical and Elecronics Engineering, IES College of Engineering, Thrissur-680551 Kerala India
2)Mr.M. Chithik Raja
3)Dr.Vishnu Rajan
4)Mr. Aneesh S
5)Ms. Anitha Mathew
6)Ms. Simitha K M
7)Mr.Sarun Kumar K P
8)Dr.Bobby N D
9)Mr.Arun Jose
10)Dr.S.Brilly Sangeetha
(72)**Name of Inventor :**
1)Dr. John Chembukkavu
2)Mr.M. Chithik Raja
3)Dr.Vishnu Rajan
4)Mr. Aneesh S
5)Ms. Anitha Mathew
6)Ms. Simitha K M
7)Mr.Sarun Kumar K P
8)Dr.Bobby N D
9)Mr.Arun Jose
10)Dr.S.Brilly Sangeetha

(57) Abstract :
ABSTRACT LITHIUM-ION BATTERY RANGE AND SoC PREDICTION FOR ELECTRIC VEHICLE Due to its growth over a more extended period, the new energy storage industry is the best alternative for lithium-ion battery technologies. The choice of the best modelling technique for battery ageing based on the investigated characterization of lifespan remains a problem. In this invention, the development and formation of various power fade models for comparing performance answers are based on a detailed data collection of Nickel Mango-Cobalt Oxide (NMC) cells. The evaluation is done using a semi-empirical (SEM) simulation against an artificial neural network model and a machine learning model. One way of forecasting performance depletion is the Nonlinear Autoregressive Network (NARXnet) that can minimize computational effort. To explain the dynamic and nonlinear behaviour of Li-ion battery ageing, it indicates the relevance of methodological choices and model performance for existence. [FIG: 1]

No. of Pages : 16 No. of Claims : 4

(12) PATENT APPLICATION PUBLICATION
(19) INDIA
(22) Date of filing of Application :04/05/2021
(21) Application No.202141020417 A
(43) Publication Date : 11/06/2021

(54) Title of the invention : SYSTEM AND METHOD FOR WASHING SOLAR PANEL WITH ADVANCED TECHNIQUE

(51) International classification	:F24S0040200000, G05D0001020000, A47L0001020000, B25J0009160000, F24S0030452000
(31) Priority Document No	:NA
(32) Priority Date	:NA
(33) Name of priority country	:NA
(86) International Application No	:NA
Filing Date	:NA
(87) International Publication No	: NA
(61) Patent of Addition to Application Number	:NA
Filing Date	:NA
(62) Divisional to Application Number	:NA
Filing Date	:NA

(71)**Name of Applicant :**
1)BATHALA NEERAJA, GOVERNMENT POLYTECHNIC.
Address of Applicant :LECTURER, DEPARTMENT OF ELECTRICAL AND ELECTRONICS ENGINEERING, GOVERNMENT POLYTECHNIC, HYDERABAD 500028, TELANGANA, INDIA Telangana India
2)Dr. SANDEEP TAYAL, MAHARAJA AGRASEN INSTITUTE OF TECHNOLOGY.
3)Dr. AMITA GOEL, MAHARAJA AGRASEN INSTITUTE OF TECHNOLOGY.
4)SUVEER CHANDRA DUBEY, INDORE INSTITUTE OF SCIENCE & TECHNOLOGY.
5)RITU K R, UNIVERSITY INSTITUTE OF TECHNOLOGY.
6)Dr. MOHAMMAD SHABAZ, LOVELY PROFESSIONAL UNIVERSITY.
7)Dr. RAJESH KUMAR THEVASIGAMANI, KONERU LAKSHMAIAH EDUCATION FOUNDATION.
8)Dr. D. KARUNKUZHALI, PANIMALAR ENGINEERING COLLEGE.
9)Dr. SORAKAYA SOMANATHAN MANIVANNAN, VELLORE INSTITUTE OF TECHNOLOGY.
10)SHAHUL HAMEED CHETTALI, SAVEETHA SCHOOL OF ENGINEERING.
11)YOGENDRA KUMAR, VSP GOVERNMENT PG COLLEGE.
12)Dr. CHENDRAPPA MUNI VELU, SAVEETHA SCHOOL OF ENGINEERING.

(72)**Name of Inventor :**
1)BATHALA NEERAJA, GOVERNMENT POLYTECHNIC.
2)Dr. SANDEEP TAYAL, MAHARAJA AGRASEN INSTITUTE OF TECHNOLOGY.
3)Dr. AMITA GOEL, MAHARAJA AGRASEN INSTITUTE OF TECHNOLOGY.
4)SUVEER CHANDRA DUBEY, INDORE INSTITUTE OF SCIENCE & TECHNOLOGY.
5)RITU K R, UNIVERSITY INSTITUTE OF TECHNOLOGY.
6)Dr. MOHAMMAD SHABAZ, LOVELY PROFESSIONAL UNIVERSITY.
7)Dr. RAJESH KUMAR THEVASIGAMANI, KONERU LAKSHMAIAH EDUCATION FOUNDATION.
8)Dr. D. KARUNKUZHALI, PANIMALAR ENGINEERING COLLEGE.
9)Dr. SORAKAYA SOMANATHAN MANIVANNAN, VELLORE INSTITUTE OF TECHNOLOGY.
10)SHAHUL HAMEED CHETTALI, SAVEETHA SCHOOL OF ENGINEERING.
11)YOGENDRA KUMAR, VSP GOVERNMENT PG COLLEGE.
12)Dr. CHENDRAPPA MUNI VELU, SAVEETHA SCHOOL OF ENGINEERING.

(57) Abstract :
Renewable energy is the need of the current situation, hence has growing interest such as photovoltaic energy based on the SPA technique. Efficient maintenance of photovoltaic panels has to be done for the system to work in a significant way. SPA technology is implemented in this invention which consists of three phases for an efficient cleaning process. The energy capacity of the system can be maintained by developing a periodic process of cleaning. SPA technology involves the movement of cleaning robots which are arranged in the form of an array over the panels. This technology used suction cups which are exploited used actuators through cables. The technology involves aerial robots implemented in the SPA method controlling both the position and the force exerted by the robots for performing the cleaning process on the solar panels. The mobility of the robots is low while performing the suction movement as it improves the stability of the system. The robots being driven by cable perform the process of cleaning effectively for a long array of panels fixed continuously. Motion is the cleaning robot is controlled by a smart controller which senses, plans and acts accordingly.

No. of Pages : 9 No. of Claims : 5

(12) PATENT APPLICATION PUBLICATION
(21) Application No.202141020431 A
(19) INDIA
(22) Date of filing of Application :04/05/2021
(43) Publication Date : 11/06/2021

(54) Title of the invention : A DEVICE FOR TRAPPING LOCUST

(51) International classification	:A23K0050100000, A01M0005080000, A01M0001220000, A01M0005000000, A01K0067033000
(31) Priority Document No	:NA
(32) Priority Date	:NA
(33) Name of priority country	:NA
(86) International Application No	:NA
Filing Date	:NA
(87) International Publication No	: NA
(61) Patent of Addition to Application Number	:NA
Filing Date	:NA
(62) Divisional to Application Number	:NA
Filing Date	:NA

(71)**Name of Applicant :**
1)KARUNYA INSTITUTE OF TECHNLOGY AND SCIENCES
Address of Applicant :KARUNYA INSTITUTE OF TECHNOLOGY AND SCIENCES, KARUNYA NAGAR, COIMBATORE-641 114 Tamil Nadu India
(72)**Name of Inventor :**
1)Dr.S.ELIZABETH AMUDHINI STEPHEN
2)Dr.SUJITHA JULIET
3)Dr.G.HEMALATHA
4)Mr.GEO KINGSLY LYNUS

(57) Abstract :
A SYSTEM FOR LOCUST SWARM TRAP FOR CATTLE FEED CONVERSION AND THE METHOD INVOLVED THEREOF
A system for locust swarm trap for cattle feed conversion is designed that is used to attract the invading Schistocerca gregaria and further sucks the locusts and prevents it from invading the field and destroying the crops. The device is a pole mounted such that it is caught in the flight before it reached the field. The input device consists of a layer that produces an odour to attract the locusts and the suction unit(4) that pulls the locusts to the device. A filter media(2) filters the locusts and takes it to a collecting tank for further processing. The processing unit consists of a collecting tank, a rotary drier(8) and a crusher(10,11). The output from the device will be protein rich cattle field. This device will address the threat for food security in the country due to the invasion of locust.

No. of Pages : 20 No. of Claims : 13

(12) PATENT APPLICATION PUBLICATION
(21) Application No.202141020435 A
(19) INDIA
(22) Date of filing of Application :05/05/2021
(43) Publication Date : 11/06/2021

(54) Title of the invention : SEMI AUTOMATIC PAPER CUTTING MACHINE USING GENEVA MECHANISM AND INDUSTRIAL INTERNET OF THINGS (IIOT)

(51) International classification	:H04L0029080000, B26D0001000000, F16H0027060000, H01H0003440000, B26D0005120000
(31) Priority Document No	:NA
(32) Priority Date	:NA
(33) Name of priority country	:NA
(86) International Application No	:NA
Filing Date	:NA
(87) International Publication No	: NA
(61) Patent of Addition to Application Number	:NA
Filing Date	:NA
(62) Divisional to Application Number	:NA
Filing Date	:NA

(71)**Name of Applicant :**
1)Dr.V. DHINAKARAN
Address of Applicant :Professor, Department of Mechanical Engineering, Chennai Institute of Technology, Kundrathur, Chennai-69, Tamil Nadu. Ph:9941617332, 9080591216 E-Mail: dhinkaranv@citchennai.net Tamil Nadu India
2)Dr. A. SATHISH KUMAR
3)Dr.RAM SUBBIAH
4)Dr.M. KUMAR
5)S RAMA LAKSHMI MALLADI
6)Dr.M. VEERAPATHRAN
7)Dr. S. AJITH ARUL DANIEL
8)Dr. V. SIVABHARATHI
9)Dr. M. THIRUCHITRAMBALAM
10)N S SIVAKUMAR
11)N. NAGARAJAN
(72)**Name of Inventor :**
1)Dr.V. DHINAKARAN
2)Dr. A. SATHISH KUMAR
3)Dr.RAM SUBBIAH
4)Dr.M. KUMAR
5)S RAMA LAKSHMI MALLADI
6)Dr.M. VEERAPATHRAN
7)Dr. S. AJITH ARUL DANIEL
8)Dr. V. SIVABHARATHI
9)Dr. M. THIRUCHITRAMBALAM
10)N S SIVAKUMAR
11)N. NAGARAJAN

(57) Abstract :
ABSTRACT OF THE INVENTION The design and fabrication of paper cutting machine using Geneva mechanism cuts the paper as per the fixed and required dimension given by the people. The objective of this concept is to design the Geneva mechanism operated paper cutting machine which eliminates the most time taking process of paper marking and helps in feed equal dimension paper in each rotation. The Geneva drive is an indexing mechanism that converts continuous motion into intermittent motion. By means of this mechanism the continuous rotary motion of the sprocket wheel is converted into intermittent rotary motion of roller. Due to which paper is moved between the equal intervals of cutting period. The paper cutting is achieved by the crank and lever mechanism. The sprocket will act as a crank, and then the cutter will act as a lever. These two links are connected by a connecting link. Then the cutter will be back to its original position by the spring effect. The machine is also connected to cloud using Industrial Internet of Things (IIOT). Two sensors are provided in the machine to switching ON and OFF the motor of the machine and one sensor is provided for counting the cuts. This ensures that user can set the quantity of paper he need to cut and when to switch on and off the machine from a remote location. This machine is also used to cut the various kind of paper products, plastic, thin film, leather, slice of nonferrous metal etc. It reduces the manual work of paper cutting, and also it saves the time. It is very useful for the paper manufacturing industry and it avoids the human errors. It can be also used in school, colleges, stationary shop™s, paper stores, etc.

No. of Pages : 10 No. of Claims : 3

(12) PATENT APPLICATION PUBLICATION
(21) Application No.202141020488 A
(19) INDIA
(22) Date of filing of Application :05/05/2021
(43) Publication Date : 11/06/2021

(54) Title of the invention : CRATUS-THE BAG OF FUTURE

(51) International classification	:A45F0003040000, A45C0013020000, A45C0015000000, A45F0003020000, A45C0013100000
(31) Priority Document No	:NA
(32) Priority Date	:NA
(33) Name of priority country	:NA
(86) International Application No	:NA
Filing Date	:NA
(87) International Publication No	: NA
(61) Patent of Addition to Application Number	:NA
Filing Date	:NA
(62) Divisional to Application Number	:NA
Filing Date	:NA

(71)**Name of Applicant :**
1) Mr. B. SENTHIKUMAR
Address of Applicant :DEPARTMENT OF PRODUCTION ENGINEERING, SRI SAIRAM ENGINEERING COLLEGE, WEST TAMBARAM, CHENNAI, TAMIL NADU - 600044. Tamil Nadu India
2)S. AADITHYA VIKRAM
3)K. LOKESH
4)K. NARAYANASHANKAR
5)R. ANIRUDDH
6)S. DIVYAPRABHU
7)F. JEHYNIN
8)R. SANTHOSH KUMAR
9)G. SOORIYA PRAGASH
10)Dr. G. PUTHILIBAI
11)Dr. S. ARUNPRASAD
(72)**Name of Inventor :**
1) Mr. B. SENTHIKUMAR
2)S. AADITHYA VIKRAM
3)K. LOKESH
4)K. NARAYANASHANKAR
5)R. ANIRUDDH
6)S. DIVYAPRABHU
7)F. JEHYNIN
8)R. SANTHOSH KUMAR
9)G. SOORIYA PRAGASH
10)Dr. G. PUTHILIBAI
11)Dr. S. ARUNPRASAD

(57) Abstract :
IN THE PRESENT INVENTION IP 68 WATERPROOF / DUST PROOF CRATUS BACKPACK FRAMES ARE DISCLOSED. THIS BAG HAS A BUILT IN PROVISION FOR POWERBANK, BUILT IN PROVISION FOR A FULL POWER STRIP WHICH (INDIA'S FIRST), AND WITH A SINGLE 240 v AC SUPPLY, TO CHARGE THE LAPTOP, TABLET, PHONE, POWERBANK AND ALL AT THE SAME TIME. THE BEST PART WE DON'T HAVE TO TAKE ANYTHING OUT OF YOUR BAG. FULL 180 DEGREE OPENING FOR EASY ACCESS. ORTHOPEDIC BACKSUPPORT AND STERNUM SUPPORT FOR EASY CARRY AND HIGHLY REDUCES PAIN. MESHED INVERTED OOPSILON DESIGN AND S-STRAPS FOR AIR FLOW AND BREATHABILITY ALSO, THE BAG PROVIDES INDIVIDUAL DEDICATED SPACES, AND A BEST IN CLASS VOLUME.

No. of Pages : 11 No. of Claims : 9

(12) PATENT APPLICATION PUBLICATION
(21) Application No.202141020489 A
(19) INDIA
(22) Date of filing of Application :05/05/2021
(43) Publication Date : 11/06/2021

(54) Title of the invention : DESIGN AND FABRICATION OF INBOARD BRAKING SYSTEM IN AN OFF-ROAD VEHICLE

(51) International classification	:B60T0008260000, B60T0001060000, B60T0013580000, B60T0001100000, B60T0008240000	(71)**Name of Applicant :** **1) PANDYARAJ. V** Address of Applicant :DEPARTMENT OF MECHANICAL ENGINEERING, SRI SAIRAM ENGINEERING COLLEGE, WEST TAMBARAM, CHENNAI, TAMIL NADU, INDIA - 600044. Tamil Nadu India
(31) Priority Document No	:NA	
(32) Priority Date	:NA	(72)**Name of Inventor :**
(33) Name of priority country	:NA	**1)PANDYARAJ. V**
(86) International Application No	:NA	**2)RAVINDRAN.S**
Filing Date	:NA	**3)GANAPATHY.S**
(87) International Publication No	: NA	**4)AVINASH. S**
(61) Patent of Addition to Application Number	:NA	**5)SAI SUBRAMANYAM K**
Filing Date	:NA	**6)SARAVANAN.S**
(62) Divisional to Application Number	:NA	**7)RAGAVENDRAN. R**
Filing Date	:NA	**8)DEEPAN KUMAR. R.V**

(57) Abstract :
A design and built of an off- road race vehicles were disclosed. This invention relates to a novel method for decelerating the vehicle is designed, known as inboard braking system / axle braking system, in which a single brake disc will be mounted on the rear axle of the vehicle. The hydraulic braking system with fixed calipers is used to lock all the four wheels within the predetermined distance and time. The stopping distance of this vehicle at the speed of 40km/hr is found to be 1.5 m. The pedal actuates the master cylinder and is capable of locking four wheels in static condition and dynamically on paved and unpaved surfaces. This new braking method is designed to eliminate recurring problem often encountered. A customized inboard braking system is typically designed as a problem solution for disc deformation. Moreover, the axle braking is to slow down or stop the vehicle safely and effectively by converting kinetic energy into heat.

No. of Pages : 19 No. of Claims : 6

(12) PATENT APPLICATION PUBLICATION
(19) INDIA
(22) Date of filing of Application :05/05/2021
(21) Application No.202141020520 A
(43) Publication Date : 11/06/2021

(54) Title of the invention : A VARIATIONAL AUTO-ENCODER CONVOLUTIONAL NEURAL NETWORK (VAE-CNN) MODEL TO IDENTIFY THE PREVALENCE OF DIABETIC RETINOPATHY DISEASE

(51) International classification	:G06N0003040000, G06K0009620000, G06N0003080000, G06K0009000000, G06T0007000000
(31) Priority Document No	:NA
(32) Priority Date	:NA
(33) Name of priority country	:NA
(86) International Application No	:NA
Filing Date	:NA
(87) International Publication No	: NA
(61) Patent of Addition to Application Number	:NA
Filing Date	:NA
(62) Divisional to Application Number	:NA
Filing Date	:NA

(71)**Name of Applicant :**
1)Mrs. Y.Sravani Devi
Address of Applicant :Assistant Professor, Department of Computer Science & Engineering, G. Narayanamma Institute of Technology & Science, Hyderabad, Telangana, INDIA Telangana India
2)Dr. Morampudi Mahesh Kumar
3)Dr. U. S. N. Raju
4)Dr. M. Seetha
5)Dr. N. Kalyani
6)Dr. V Dinesh Reddy
7)Dr. S. Phani Kumar
(72)**Name of Inventor :**
1)Mrs. Y.Sravani Devi
2)Dr. Morampudi Mahesh Kumar
3)Dr. U. S. N. Raju
4)Dr. M. Seetha
5)Dr. N. Kalyani
6)Dr. V Dinesh Reddy
7)Dr. S. Phani Kumar

(57) Abstract :
The data scarcity problem in eye dataset to detect eye diseases like diabetic retinopathy, glaucoma and ARMD leads to difficulty in building an affective model with high accuracy using machine learning algorithms or deep neural networks. Likely, optimizing a grading model to have strong generality requires a more data to train the dataset, which is exceedingly difficult for the high severity classes. Traditional data augmentation methods, including random flipping and left/right rotations, cannot generate data with high diversity. To address this, we propose a Variational Auto Encoder Convolutional Neural Network model (VAE-CNN) to synthesize the high-resolution retinal image data and identify the prevalence of the diabetic retinopathy disease. Every VAE can learn to reconstruct each class independently and generating new samples for each class. The pre-processed images are input to DL architecture (CNN in our invention) for the automatic extraction of features and their associated weights to learn the classification rules. The features weights are optimized recursively to ensure the best classification results. Finally, the optimized weights are tested on an unseen set of images.

No. of Pages : 17 No. of Claims : 5

(12) PATENT APPLICATION PUBLICATION
(21) Application No.202141020540 A
(19) INDIA
(22) Date of filing of Application :05/05/2021
(43) Publication Date : 11/06/2021

(54) Title of the invention : A SYSTEM FOR A REMOTELY OPERATED UNDERWATER VEHICLE FOR INSPECTION

(51) International classification	:B63G0008000000, E21B0033035000, B65H0075440000, B63C0011420000, B63C0011520000
(31) Priority Document No	:NA
(32) Priority Date	:NA
(33) Name of priority country	:NA
(86) International Application No	:NA
Filing Date	:NA
(87) International Publication No	: NA
(61) Patent of Addition to Application Number	:NA
Filing Date	:NA
(62) Divisional to Application Number	:NA
Filing Date	:NA

(71)**Name of Applicant :**
1)Planys Technologies Private Limited
Address of Applicant :No. 5, Jaya Nagar Extension, Balaji Nagar Main Road, G.K. Avenue, Puzhuthivakkam, Chennai 600091, Tamil Nadu, India Tamil Nadu India
(72)**Name of Inventor :**
1)Vineet Upadhyay
2)Sanchit Gupta
3)Santhosh Ravichandran
4)Govindaraj K.

(57) Abstract :
A system for a remotely operated underwater vehicle (ROV) for inspection, the system comprising: a safety and distribution box connected with a main power supply source for power distribution to the remotely operated underwater vehicle, a Control Station, a Tether Management System;a buoyant umbilical tether cable connected to the underwater vehicle;a control unit for controlling and operating the ROV; and a tether cable management system interfaced with said control unit for winding and unwinding the buoyant umbilical cable;the safety and distribution box generate a high voltage DC current and transmit to the ROV so that the ROV is capable to operate at predetermined maximum length of the umbilical cable.

No. of Pages : 43 No. of Claims : 21

(12) PATENT APPLICATION PUBLICATION
(21) Application No.202141020546 A
(19) INDIA
(22) Date of filing of Application :05/05/2021
(43) Publication Date : 11/06/2021

(54) Title of the invention : DETECTION OF FORMALDEHYDE IN MARKETED FISH USING X-FRACTAL UWB PATCH ANTENNA AND RADIO WAVES

(51) International classification	:H01Q0009040000, G01N0033120000, A23B0004220000, A01N0001000000, G01N0033020000
(31) Priority Document No	:NA
(32) Priority Date	:NA
(33) Name of priority country	:NA
(86) International Application No	:NA
Filing Date	:NA
(87) International Publication No	: NA
(61) Patent of Addition to Application Number	:NA
Filing Date	:NA
(62) Divisional to Application Number	:NA
Filing Date	:NA

(71)**Name of Applicant :**
1)Dr. Neeraj Kumar Shukla
Address of Applicant :Associate Professor, Department of Electrical Engineering, King Khalid University Abha, Kingdom of Saudi Arabia. Saudi Arabia
2)Pawan Kumar Verma
3)RAJKUMAR KRISHNAMURTHY
4)Dr. Rajesh Verma
5)Dr Javed Khan Bhutto
6)Dr.M.Ramkumar Raja
(72)**Name of Inventor :**
1)Dr. Neeraj Kumar Shukla
2)Pawan Kumar Verma
3)RAJKUMAR KRISHNAMURTHY
4)Dr. Rajesh Verma
5)Dr Javed Khan Bhutto
6)Dr.M.Ramkumar Raja

(57) Abstract :
Fish is an important food stuff and source of protein all over the world. The ingesting of fish has latterly perceived an upward trend about the issue of adulteration of fish with unsanctioned chemicals and condiments has also come into the light. Traders and suppliers use formalin as an additive substance in fish to outspread the storing life of fresh or chilled fish and artificially improve the sensory attributes. A toxic chemical, formalin is used to preserve bodies and prevent its decay in mortuaries. Even though, the volume of formalin content in fish shrinks tirelessly during storage but cannot be detached totally. Ingesting of fish adulterated with formalin can cause health issues such as abdominal discomfort, vomiting, renal injury, etc. The occurrence of naturally varying levels of formaldehyde present in different food materials including seafood due to post-mortem enzymatic reaction makes the monitoring of illegally added formalin difficult. The estimation of formalin content in fishes can be made as a cost effective solution by using Radio Frequency signal. The RF signal when propagated in free space exhibits three different properties such as reflection, diffraction and scattering according to the variable dielectrics present in free space. Freshness property of a fish has a considerable influence on its quality and has a unique dielectric value. When an RF signal is transmitted and received using the designed X-Fractal UWB Patch antenna the absorption coefficient, Reflection parameter and Diffracted parameter is measured. Fish industry experts say that formalin is sprayed or injected and fish are dipped in it to preserve it. When an RF signal is transmitted and received using the designed X-Fractal UWB Patch antenna the absorption coefficient, Reflection parameter and Diffracted parameter is measured and found to be different. An experiment is conducted for generating a data set with different concentrations of formalin. Therefore, when a fish is placed in our designed device depending upon the received coefficients our supervised learning algorithm predicts the Percentage of formalin content in fish.

No. of Pages : 23 No. of Claims : 9

(12) PATENT APPLICATION PUBLICATION
(21) Application No.202141020552 A
(19) INDIA
(22) Date of filing of Application :05/05/2021
(43) Publication Date : 11/06/2021

(54) Title of the invention : A METHOD FOR DESIGNING FOUNDATIONS OF INDUSTRIAL STRUCTURES AND STRUCTURES SUBJECTED TO DYNAMIC LOADS

(51) International classification	:E04H0009020000, G01N0003320000, E02D0001020000, E02D0027340000, E02D0027440000
(31) Priority Document No	:NA
(32) Priority Date	:NA
(33) Name of priority country	:NA
(86) International Application No	:NA
Filing Date	:NA
(87) International Publication No	: NA
(61) Patent of Addition to Application Number	:NA
Filing Date	:NA
(62) Divisional to Application Number	:NA
Filing Date	:NA

(71)**Name of Applicant :**
1)Dr C.N.V. Satyanarayana Reddy
Address of Applicant :Professor, Department of Civil Engineering, Andhra University College of Engineering, Andhra University, Visakhapatnam - 530003, Andhra Pradesh, India Andhra Pradesh India
(72)**Name of Inventor :**
1)Dr C.N.V. Satyanarayana Reddy

(57) Abstract :
The present disclosure relates to a method for designing foundations of industrial structures and structures subjected to dynamic loads. Coefficient of elastic uniform compression (Cu) of soil, used in the determination of soil spring stiffness for design of foundations of industrial structures and structures subjected to dynamic loads, is generally determined from cyclic plate load tests. The values of Cu determined with respect to test plate size are corrected for actual foundation size based on Barkan™s equation. The effect of shape of loading plate on Cu is studied in cohesionless and cohesive soils through small scale cyclic load tests conducted in the laboratory using square and circular loading plates of same size. The results of study revealed that the value of coefficient of elastic uniform compression (Cu) of circular test plate is about 0.85 and 1.2 times of Cu of square plate in fine sand and cohesive soils, respectively.

No. of Pages : 21 No. of Claims : 9

(12) PATENT APPLICATION PUBLICATION
(21) Application No.202141020564 A
(19) INDIA
(22) Date of filing of Application :05/05/2021
(43) Publication Date : 11/06/2021

(54) Title of the invention : PROPERTY PURCHASE BASED INCENTIVE REWARD SYSTEM FOR CUSTOMERS

(51) International classification	:G06Q0030020000, G06Q0030060000, G06Q0050160000, G06Q0050260000, G01V0003080000
(31) Priority Document No	:NA
(32) Priority Date	:NA
(33) Name of priority country	:NA
(86) International Application No	:NA
Filing Date	:NA
(87) International Publication No	: NA
(61) Patent of Addition to Application Number	:NA
Filing Date	:NA
(62) Divisional to Application Number	:NA
Filing Date	:NA

(71)**Name of Applicant :**
1)Geddam Venkateswara Rao
Address of Applicant :S/O Nageswara Rao, FF-1, 5th Floor, Gostani Apartment, Revenue Layout, PM Palem, Visakhapatnam-530041, Andhra Pradesh, India. Andhra Pradesh India
(72)**Name of Inventor :**
1)Geddam Venkateswara Rao

(57) Abstract :
ABSTRACT: Title: Property Purchase Based Incentive Reward System for Customers The present disclosure proposes a property purchase based incentive reward system for customers by a business organization for purchasing a property such as a real estate purchase or a daily commodity purchase or a precious metal purchase thereof. The system 100 comprises a purchase detection module 101, a registration module 102, an automatic filling module 103, a pool registration module 104, a rebirth ID generation module 105 and an incentive calculation module 106. The proposed system provides multiple and continuous incentives to the user without any contribution or promotion of the organization by the customer. The system provides continuous incentive rewards to the customer and corresponding nominees of the customer.

No. of Pages : 15 No. of Claims : 5

(12) PATENT APPLICATION PUBLICATION
(21) Application No.202141020565 A
(19) INDIA
(22) Date of filing of Application :05/05/2021
(43) Publication Date : 11/06/2021

(54) Title of the invention : PERCEPTIBLE SUCCOUR FOR VISUALLY IMPAIRED

(51) International classification	:G06K0009000000, G09B0021000000, A61H0003060000, B60W0030080000, A61F0009080000
(31) Priority Document No	:NA
(32) Priority Date	:NA
(33) Name of priority country	:NA
(86) International Application No	:NA
Filing Date	:NA
(87) International Publication No	: NA
(61) Patent of Addition to Application Number	:NA
Filing Date	:NA
(62) Divisional to Application Number	:NA
Filing Date	:NA

(71)**Name of Applicant :**
1)Dr. Pydimarri Padmaja
Address of Applicant :Professor Teegala Krishna Reddy Engineering College, Department of Electronics Communication Engineering (ECE), Meerpet Medbowli, TKR College Rd, Hyderabad, Telangana- 500097 Andhra Pradesh India
(72)**Name of Inventor :**
1)Dr. Pydimarri Padmaja

(57) Abstract :
Visually impaired and Perceptible Succour people find difficulties detecting obstacles while walking, which makes it dangerous. The smart system comes as a proposed solution to help them to avoid obstacles around them. Object detection is a field of computer vision that detects instances of objects in images/videos which can then be converted to annotated text into voice responses. I proposed a smart solution based on a camera connected to a Raspberry Pi embedded board which captures the videos of the obstacles. The proposed system live streams the output of the camera to the Raspberry Pi board and sends feedback in the form of speech warning messages about the kind of objects present and basic positions of the objects in the person/camera™s view. This entire system can be made of compact size and can be attached to a hat so that it would become easy for the visually impaired people to carry it.

No. of Pages : 12 No. of Claims : 4

(12) PATENT APPLICATION PUBLICATION
(19) INDIA
(22) Date of filing of Application :06/05/2021
(21) Application No.202141020598 A
(43) Publication Date : 11/06/2021

(54) Title of the invention : IOT ENABLED SOLAR THERMAL STORAGE TANK IMPLANTED WITH PCM ROOM

(51) International classification	:F24S0060300000, F24D0011000000, F28D0020000000, F24D0017000000, F24S0060000000
(31) Priority Document No	:NA
(32) Priority Date	:NA
(33) Name of priority country	:NA
(86) International Application No	:NA
Filing Date	:NA
(87) International Publication No	: NA
(61) Patent of Addition to Application Number	:NA
Filing Date	:NA
(62) Divisional to Application Number	:NA
Filing Date	:NA

(71)**Name of Applicant :**
1)Dr. P. MANOJ KUMAR
Address of Applicant :ASSISTANT PROFESSOR, DEPARTMENT OF MECHANICAL ENGINEERING, KPR INSTITUTE OF ENGINEERING AND TECHNOLOGY, ARASUR, COIMBATORE, TAMILNADU, INDIA 641407. Tamil Nadu India
2)Mr. S. VASANTHASEELAN
3)Dr. RAM SUBBIAH
4)Dr. D.S. JENARIS
5)Dr. K. RAVI KUMAR
6)Dr. M. VIJAYAKUMAR
7)Mr. K. ABRAHAM
8)Dr. P. MICHAEL JOSEPH STALIN
9)Mr. K. SUBASH
10)Mr. M. PRATHIYUNNAN
11)Mr. Q. STALIN ANDREWS
(72)**Name of Inventor :**
1)Dr. P. MANOJ KUMAR
2)Mr. S. VASANTHASEELAN
3)Dr. RAM SUBBIAH
4)Dr. D.S. JENARIS
5)Dr. K. RAVI KUMAR
6)Dr. M. VIJAYAKUMAR
7)Mr. K. ABRAHAM
8)Dr. P. MICHAEL JOSEPH STALIN
9)Mr. K. SUBASH
10)Mr. M. PRATHIYUNNAN
11)Mr. Q. STALIN ANDREWS

(57) Abstract :
AnloT enabled solar thermal storage tank implanted with PCM roomcomprises of a type of solar thermal tank (1) with a secondary water tank (9). The water (5) is stored in the solar thermal tank (1), which is new of this kind with an implanted semi-annular PCM storage room with fins (7) at its bottom. The thermal insulation material (3) is provided between outer and inner layer (2) of the water tank to minimize the heat loss. The organic, eco-friendly, harmless and highly efficient phase change material (6) is stored in the semi-annular room (7) for increasing thermal storage capacity of the solar thermal tank (1). Further, the solar thermal tank (1) is connected to a secondary water tank (9) through the insulated piping (8). The secondary tank (9) is used to tap-out the hot water at the required temperature from the solar thermal tank (1) and store at the desired temperature. A smart valve (4) is fitted near the solar thermal tank (1), which is operated through loT (Internet of Things) technology using a smart phone. During the operation, the entire set-up is connected to the solar thermal collector (10).

No. of Pages : 14 No. of Claims : 3

(12) PATENT APPLICATION PUBLICATION
(21) Application No.202141020611 A
(19) INDIA
(22) Date of filing of Application :06/05/2021
(43) Publication Date : 11/06/2021

(54) Title of the invention : WATER LEVEL AND WATER DISCHARGE MONITORING OF INLAND WATER BODIES USING LEO SATELLITE CONSTELLATION

(51) International classification	:H04B0007185000, G01F0001660000, H04B0007195000, G06Q0010040000, G06Q0010060000
(31) Priority Document No	:NA
(32) Priority Date	:NA
(33) Name of priority country	:NA
(86) International Application No	:NA
Filing Date	:NA
(87) International Publication No	: NA
(61) Patent of Addition to Application Number	:NA
Filing Date	:NA
(62) Divisional to Application Number	:NA
Filing Date	:NA

(71)**Name of Applicant :**
1) VELS INSTITUTE OF SCIENCE, TECHNOLOGY & ADVANCED STUDIES(VISTAS)
Address of Applicant :VELS INSTITUTE OF SCIENCE, TECHNOLOGY & ADVANCED STUDIES(VISTAS), VELAN NAGAR, PV VAITHIYALINGAM RD, PALLAVARAM, CHENNAI, TAMIL NADU - 600117, INDIA. Tamil Nadu India
(72)**Name of Inventor :**
1) Dr. G. SUSEENDRAN
2)Dr. D. AKILA
3)Dr. R. JAYAKARTHIK
4)Ms. K. PARVATHAVARTHINI

(57) Abstract :
River discharge measurements play an important role in applications such as flood management, climate studies and water resources management. Hence the requirement for long-term, continuous, spatially consistent and readily available river discharge data is high. Recent advances in satellite-based optical remote sensors have improved the field of surface water monitoring to next level. This research designs Low Earth orbit (LEO) satellite constellation-based IoT services for water level and water discharge monitoring of inland water bodies. The loT sensors consist of Arduino, ultrasonic and flow rate sensors, which are deployed above the water to be monitored. They will measure the altitude, width and velocity of the river. The IoT sensors can detect the presence of the satellite and directly sends the collected river water information to the satellite. The satellites will store and forward the data from IoT sensors to the ground stations. The ground stations act as a gateway between the end-user and IoT sensors. At the end user terminal, a diagnostic decision system is developed where the risks of flood are computed based on the sensed data. The computed risks will be used for broadcasting warning messages to all citizens present in that region, using a risk-warning scheduling mechanism

No. of Pages : 8 No. of Claims : 6

(12) PATENT APPLICATION PUBLICATION
(21) Application No.202141020620 A
(19) INDIA
(22) Date of filing of Application :06/05/2021
(43) Publication Date : 11/06/2021

(54) Title of the invention : SYSTEM AND METHOD FOR SECURE TRANSMISSION IN MOBILE AD HOC NETWORKS USING TRUST MANAGEMENT

(51) International classification	:H04W0084180000, H04L0029060000, H04W0040240000, H04W0012120000, G06F0021570000
(31) Priority Document No	:NA
(32) Priority Date	:NA
(33) Name of priority country	:NA
(86) International Application No	:NA
Filing Date	:NA
(87) International Publication No	: NA
(61) Patent of Addition to Application Number	:NA
Filing Date	:NA
(62) Divisional to Application Number	:NA
Filing Date	:NA

(71)**Name of Applicant :**
1) VELS INSTITUTE OF SCIENCE, TECHNOLOGY & ADVANCED STUDIES(VISTAS)
Address of Applicant :VELS INSTITUTE OF SCIENCE, TECHNOLOGY & ADVANCED STUDIES(VISTAS), VELAN NAGAR, PV VAITHIYALINGAM RD, PALLAVARAM, CHENNAI, TAMIL NADU - 600117, INDIA. Tamil Nadu India
(72)**Name of Inventor :**
1) Dr. V. JAYALAKSHMI
2)Dr. S. JAYALAKSHMI
3)Dr. S. PRASANNA

(57) Abstract :
A Mobile ad hoc networks (MANETs) consist or a collection or wireless mobile nodes which dynamically exchange data among themselves without the reliance on a fixed base station or a wired backbone network. Due to the openness in network topology, the security of communication in ad hoc wireless networks is significant, and worth following, especially in military applications. Collaboration is fruitful only if all participants operate in an authentic manner. Therefore, establishing and quantifying trust, which is the main impetus for collaboration, is very important for securing distributed networks. In this method, the trust value is estimated based on the node's malicious behavior which can be predicted by considering three essential factors namely (l)the total number of packets forwarded (2) the number of packets correctly transmitted by the node, and (3) the importance of the packets transmitted by the node. The trust value is propagated to each node which does not have a trust value and attains the most trustable path. In trust vector, the most trustable path can be computed as the maximal product value of all directed edges along a path. The path obtained by this method yields not only the path with trusted nodes but also the number of hops is less.So this method provides a secure transimission in the network.

No. of Pages : 11 No. of Claims : 8

(12) PATENT APPLICATION PUBLICATION
(21) Application No.202141020621 A
(19) INDIA
(22) Date of filing of Application :06/05/2021
(43) Publication Date : 11/06/2021

(54) Title of the invention : IOT ENABLED WATER QUALITY MONITORING AND ALERTING SYSTEM FOR HOME WATER PURIFIER

(51) International classification	:H04L0029080000, G01N0033180000, H04L0029060000, G05B0019042000, H04L0012260000
(31) Priority Document No	:NA
(32) Priority Date	:NA
(33) Name of priority country	:NA
(86) International Application No	:NA
Filing Date	:NA
(87) International Publication No	: NA
(61) Patent of Addition to Application Number	:NA
Filing Date	:NA
(62) Divisional to Application Number	:NA
Filing Date	:NA

(71)**Name of Applicant :**
1) VELS INSTITUTE OF SCIENCE, TECHNOLOGY & ADVANCED STUDIES(VISTAS)
Address of Applicant :VELS INSTITUTE OF SCIENCE, TECHNOLOGY & ADVANCED STUDIES(VISTAS), VELAN NAGAR, P V VAITHIYALINGAM RD, PALLAVARAM, CHENNAI, TAMILNADU-600117, INDIA. Tamil Nadu India
(72)**Name of Inventor :**
1) Mrs.K. KALAIVANI
2)Mrs.K. ULAGAPRIYA
3)Mrs.A. SARITHA
4)Mr. SYED RIZWAN
5)Ms. USHA KUMARI

(57) Abstract :
I Smart solutions for water quality monitoring are gaining importance with advancement in communication technology. This project a detailed overview of recent works carried out in the field of monitoring water through smart sensing using IoT. Also, a power efficient, simpler solution for water quality monitoring based on Internet of Things technology is presented. The model developed is used for testing water samples and the data uploaded over the Internet are analyzed. The system also provides an alert to a user and also to the nearby service centre when there is a deviation of water quality parameters from the pre-defined set of standard values. The proposed system is turbidity, temperature and Ph. The Arduino microcontroller forms a central part of monitoring water; it is observed that most of the IOT based solutions use a controller with external Wi-Fi. Such designs are notjcost effective and power efficient. Here the ESP8266 Wi-Fi Module is a self-contained SOC.with integrated TCP/IP) protocol stack that can give any microcontroller access to your Wi-Fi network. The ESP8266 is capable of either hosting an application or offloading all Wi-Fi networking functions from another application processor. Sensors are directly interfaced to the controller since the proposed system is to monitor domestic water. The sensor parameters such as, turbidity, temperature and pH are measured by placing the sensor into the RO Purifier. The measured parameters can be viewed by using LCD. The data from the sensors are sent to the cloud using the controller. Threshold is set in the cloud based on the standards provided by WHO. Messages are sent from cloud to the users mobile if the value exceeds the threshold. A mobile application has been developed in which values obtained by each sensor in the cloud can be viewed. Data sent from the controller is stored in Ubidots cloud. Ubidots offers a platform for developers to capture data and turn it into useful information. The features include a real-time dashboard to analyze data or control devices and share the data through public links. Data stored in the cloud can be used for detailed analysis. The cloud is programmed to send alert SMS messages whenever the monitored parameter exceeds the threshold limit.

No. of Pages : 8 No. of Claims : 7

(12) PATENT APPLICATION PUBLICATION
(21) Application No.202141020622 A
(19) INDIA
(22) Date of filing of Application :06/05/2021
(43) Publication Date : 11/06/2021

(54) Title of the invention : DEVELOPMENT OF BUCCAL ADHESIVE FILM CONTAINING COMBINATION OF ANTI-OXIDANTS FOR PREVENTING THE PROGR

(51) International classification	:A61K0009000000, A61K0049000000, A61K0036310000, A61K0033340000, A61B0005000000
(31) Priority Document No	:NA
(32) Priority Date	:NA
(33) Name of priority country	:NA
(86) International Application No	:NA
Filing Date	:NA
(87) International Publication No	: NA
(61) Patent of Addition to Application Number	:NA
Filing Date	:NA
(62) Divisional to Application Number	:NA
Filing Date	:NA

(71)**Name of Applicant :**
1) VELS INSTITUTE OF SCIENCE, TECHNOLOGY & ADVANCED STUDIES(VISTAS)
Address of Applicant :VELS INSTITUTE OF SCIENCE, TECHNOLOGY & ADVANCED STUDIES(VISTAS), VELAN NAGAR, PV VAITHIYALINGAM RD, PALLAVARAM, CHENNAI, TAMIL NADU - 600117, INDIA. Tamil Nadu India
(72)**Name of Inventor :**
1) Dr. SHANMUGASUNDARAM P
2)Dr. SATHESH KUMAR S
3)Mrs. BHARGAVI B

(57) Abstract :
The possibilities of developing or oral lesions into a malignant tumor were extensively studied my various oral oncologists. Treating the buccal lesions for the patients are a big task for the physicians. The oral mucosa is highly versatile and the presence of secretion makes it non-stickier to any topical agents. Presences of any foreign substances inside the buccal cavity stimulate the salivary/mucous secretions, thereby quickly draining the topical applications into the gut The buccal mucosa is the best suited site for local, as well as systemic delivery of drugs due to its physiological features. It is an elegant and effective dosage form with improved bioavailability. It bypasses the hepatic first pass metabolism and does not require swallowing.. The effectiveness in enhanced by incorporation tailored combination of mucoadhesive polymers. The present invention consists of: a. A Novel combination of antioxidants with property to prevent the progression of cancerous lesions towards malignancy b. Buccal film that can deliver the incorporated antioxidants to release effectively on the required site. c. A polymeric combination to enhance the mucoadhesion to the oral mucosa for enhanced delivery of the incorporated agents.

No. of Pages : 12 No. of Claims : 6

(12) PATENT APPLICATION PUBLICATION
(21) Application No.202141020623 A
(19) INDIA
(22) Date of filing of Application :06/05/2021
(43) Publication Date : 11/06/2021

(54) Title of the invention : AN INITIAL STEP TO IMPLEMENT SMART BINS IN CHENNAI LOCAL TRAINS

(51) International classification	:B65F0001000000, B65F0007000000, G06Q0050300000, B61D0041000000, G09B0019000000
(31) Priority Document No	:NA
(32) Priority Date	:NA
(33) Name of priority country	:NA
(86) International Application No	:NA
Filing Date	:NA
(87) International Publication No	: NA
(61) Patent of Addition to Application Number	:NA
Filing Date	:NA
(62) Divisional to Application Number	:NA
Filing Date	:NA

(71)**Name of Applicant :**
1) VELS INSTITUTE OF SCIENCE, TECHNOLOGY & ADVANCED STUDIES(VISTAS)
Address of Applicant :VELS INSTITUTE OF SCIENCE, TECHNOLOGY & ADVANCED STUDIES(VISTAS), VELAN NAGAR, PV VAITHIYALINGAM RD, PALLAVARAM, CHENNAI, TAMIL NADU - 600117, INDIA. Tamil Nadu India
(72)**Name of Inventor :**
1)Dr. A. PREMA KIRUBAKARAN
2)Dr. R. RENUGA DEVI
3)Dr. B. BOOBA
4)Dr. A. THIRUNURTHI RAJA
5)Dr. NONGMAITHEM AJITH SINGH
6)Dr. V. VASANTHI
7)Mr. S. GOPALAKRISHNAN
8)Mr. G. M. SRIDHAR
9)Mrs. J. LYSA EBEN

(57) Abstract :
An everyday journey in a local train drives us into many ideas. Watching out through the window and you see people littering around, with overflowing dustbins inside the train, paved way to sow this idea of clearing the dustbins ,once it is filled by using smart sensor recognition. The dustbins in a train need to be equipped with a sensor, once it is filled an indicator will indicate the status of the bin filling and this in turn will be emptied in the next nearest station. The nearest station will be always in a standby position to accept the trash from the train dustbin. The process repeats from filling in to getting emptied in a recursive way. This is ah initial process to save our tracks from litter. If this is successful, next we can implement in the passenger and express trains.

No. of Pages : 9 No. of Claims : 6

(12) PATENT APPLICATION PUBLICATION
(19) INDIA
(22) Date of filing of Application :06/05/2021
(21) Application No.202141020624 A
(43) Publication Date : 11/06/2021

(54) Title of the invention : DRONE DETECTION

(51) International classification	:G06K0009000000, G06N0003040000, B64C0039020000, G06K0009620000, G06K0009460000
(31) Priority Document No	:NA
(32) Priority Date	:NA
(33) Name of priority country	:NA
(86) International Application No	:NA
Filing Date	:NA
(87) International Publication No	: NA
(61) Patent of Addition to Application Number	:NA
Filing Date	:NA
(62) Divisional to Application Number	:NA
Filing Date	:NA

(71)**Name of Applicant :**
1) VELS INSTITUTE OF SCIENCE, TECHNOLOGY & ADVANCED STUDIES(VISTAS)
Address of Applicant :VELS INSTITUTE OF SCIENCE, TECHNOLOGY & ADVANCED STUDIES(VISTAS), VELAN NAGAR, P V VAITHIYALINGAM RD, PALLAVARAM, CHENNAI, TAMILNADU-600117, INDIA. Tamil Nadu India
(72)**Name of Inventor :**
1) Dr. K. PRIYADARSINI
2)Mr. GOWRISHANKAR R
3)Mr. ASHOK T

(57) Abstract :
Drones are Unmanned Aerial Vehicles. The drones are used in delivering goods, medicines, food items and also used to monitor crowd and public events. Sometimes it may be used to capture the personal information. To avoid such circumstances; we need to detect drones in advance. We compared the existing computer vision methods such as background subtraction, edge detection, optical flow and frame difference for object detection. In our work, we used Convolutional Neural Network for both object detection and classification to enhance its performance.

No. of Pages : 8 No. of Claims : 5

(12) PATENT APPLICATION PUBLICATION
(21) Application No.202141020667 A
(19) INDIA
(22) Date of filing of Application :06/05/2021
(43) Publication Date : 11/06/2021

(54) Title of the invention : ADDRESSING TWITTER SPAM DRIFT PROBLEM USING SEMI-SUPERVISED LEARNING APPROACH

(51) International classification	:G06N0020000000, H04L0012580000, G06N0007000000, G06N0005000000, G06F0016300000
(31) Priority Document No	:NA
(32) Priority Date	:NA
(33) Name of priority country	:NA
(86) International Application No	:NA
Filing Date	:NA
(87) International Publication No	: NA
(61) Patent of Addition to Application Number	:NA
Filing Date	:NA
(62) Divisional to Application Number	:NA
Filing Date	:NA

(71)**Name of Applicant :**
1)L A Lalitha
Address of Applicant :Assistant Professor, School of Computing and Information Technology, REVA University, Bengaluru lalitha.la@reva.edu.in Karnataka India
(72)**Name of Inventor :**
1)Libina B Thomas
2)Mona Nirvinda P
3)N B Mounika
4)L A Lalitha
5)Dr. Vishwanath R Hulipalled

(57) Abstract :
Twitter has revolutionized how people obtain information by encouraging them to share their thoughts and opinions on everyday tweets. Unfortunately, spammers have found Twitter to be very appealing as a result of its high popularity. In contrast to other forms of spam, Twitter spam has become a major problem in recent years. A large number of users and a large volume of information exchanged on Twitter contribute significantly to the dissemination of spam. Twitter and the research community have been designing various spam detection systems using different machine-learning techniques in order to protect users. However, a recent study found that existing machine learning-based detection systems are unable to reliably detect spam because the characteristics of spam tweets change over time. The problem is known as Twitter Spam Drift. To address this, a semi-supervised learning method (SSLA) has been proposed in the proposed framework. The new method learns the domain structure by using unlabeled data. The analysis uses a live Twitter stream of data to deal with the drift. Machine learning is used to detect spam and non-spam users after pre-processing of live-downloaded data. Experiments were performed using several machine-learning algorithms, resulting in using the best performing algorithm for the proposed problem in terms of accuracy.

No. of Pages : 5 No. of Claims : 2

(12) PATENT APPLICATION PUBLICATION
(21) Application No.202141020747 A
(19) INDIA
(22) Date of filing of Application :07/05/2021
(43) Publication Date : 11/06/2021

(54) Title of the invention : SYSTEM FOR EFFICIENT TRANSPORTATION OF MEDICAL OXYGEN TO COVID PATIENTS AT HOME QUARANTINE

(51) International classification	:A61G0010020000, A61M0016120000, A61M0016000000, B01D0053053000, F17C0013080000
(31) Priority Document No	:NA
(32) Priority Date	:NA
(33) Name of priority country	:NA
(86) International Application No	:NA
Filing Date	:NA
(87) International Publication No	: NA
(61) Patent of Addition to Application Number	:NA
Filing Date	:NA
(62) Divisional to Application Number	:NA
Filing Date	:NA

(71)**Name of Applicant :**
1)Dr.K.Dhayalini
Address of Applicant :Professor and Head, Department of Electrical and Electronics Engineering, K.Ramakrishnan College of Engineering (Autonomous), Samayapuram, Tiruchirappalli-621112, Tamilnadu, India. Tamil Nadu India
2)Dr. N. Shanmuga priya
3)Dr.V.Kathiresan
4)Prof.S.Nithyanandh
5)Preethi B
6)Dr.R.Kumar
7)Dr.S.Sasikala Devi
8)Ms. Dimple Chawla
9)ANU C.S
10)Dr. Bhavik U swadia
11)Dr. Md. Khaja Mohiddin
12)Dr.S.Balamurugan
(72)**Name of Inventor :**
1)Dr.K.Dhayalini
2)Dr. N. Shanmuga priya
3)Dr.V.Kathiresan
4)Prof.S.Nithyanandh
5)Preethi B
6)Dr.R.Kumar
7)Dr.S.Sasikala Devi
8)Ms. Dimple Chawla
9)ANU C.S
10)Dr. Bhavik U swadia
11)Dr. Md. Khaja Mohiddin
12)Dr.S.Balamurugan

(57) Abstract :
The System for Efficient Transportation of Medical Oxygen to COVID Patients at Home Quarantine (ETMOCP) helps the COVID patients to make use of the ETMOCP to supply the oxygen at home efficiently in an uninterrupted manner. The oxygen tank stores the oxygen in bulk in a particular street or a locality. The electric post and electric line already have a connection with every home. Here, to the below of electric line with safe distance, the oxygen line is placed with the help of the electric post. Every home has a connection from the oxygen line. A COVID patient is in-home quarantine and requires medical oxygen, then he needs to inform the control unit of the oxygen tank. Then the officials of the control unit make necessary arrangements for the requested patient to utilize the medical oxygen at home. The gas sensor with the speaker alerts the user when there is a leakage. The ETMOCP control unit helps to monitoring and managing the successful functioning of the whole ETMOCP system. By using this ETMOCP, the COVID patients make use of the ETMOCP to supply the oxygen at home efficiently in an uninterrupted manner.

No. of Pages : 16 No. of Claims : 3

(12) PATENT APPLICATION PUBLICATION
(21) Application No.202141020752 A
(19) INDIA
(22) Date of filing of Application :07/05/2021
(43) Publication Date : 11/06/2021

(54) Title of the invention : DOMESTIC GAS BURNER FOR LARGE BOTTOM COOKWARE

(51) International classification	:F23D0014060000, F23D0014700000, F23D0014580000, F24C0003080000, F23D0014020000
(31) Priority Document No	:NA
(32) Priority Date	:NA
(33) Name of priority country	:NA
(86) International Application No	:NA
Filing Date	:NA
(87) International Publication No	: NA
(61) Patent of Addition to Application Number	:NA
Filing Date	:NA
(62) Divisional to Application Number	:NA
Filing Date	:NA

(71)**Name of Applicant :**
1)Dr. ZEENATHUL FARIDA ABDUL GANI
Address of Applicant :Professor, Department of Mechanical Engineering Francis Xavier Engineering College Tirunelveli, Tamil Nadu Tamil Nadu India
2)Mr. S. DANI
(72)**Name of Inventor :**
1)Mr. S. DANI
2)Dr. ZEENATHUL FARIDA ABDUL GANI

(57) Abstract :
Domestic gas burner is considered as one of the powerful devices invented without any moving parts. The design treatment of these burners has changed over years in various aspects still providing a huge scope for better design. These burners are primarily used indoors which demands safe, stable and efficient functioning. To improve the safety and stable functioning of domestic gas burner, a new burner design has been developed. The proposed burner design is suitable for any commercial gas stoves and can also be employed as a retrofit option with slight modification in existing stoves. The fuel ports in the primary burner head facilitates swirl flow which ensures extended residential time and enhanced mixing. This also improves better anchoring of flamelets to the mouth of the ports leading to better flame stability. Another unique design feature is the circumferential outer ring with an independent mixing tube and control knob. The circumferential outer ring is optional and can be used when cookware with large bottom area is used. This additional feature aids in fast cooking and reduces heat loss due to radiation and convection. Swirl induced flame guarantees complete combustion leading to less pollutant emission. The new burner prototype has been developed with the conventional table top burner specification as reference. A set of preliminary experiments have also been made with varying equivalence ratio and two different diameter bottom cookware. The results from the experiments show an increase in thermal efficiency and reduced cooking time. The increase in efficiency is higher at low equivalence ratio.

No. of Pages : 18 No. of Claims : 8

(12) PATENT APPLICATION PUBLICATION
(19) INDIA
(22) Date of filing of Application :07/05/2021
(21) Application No.202141020753 A
(43) Publication Date : 11/06/2021

(54) Title of the invention : REMOTE CONTROLLED AIR VEHICLE BASED SANITIZING SYSTEM WITH PAYLOAD CARRIER

(51) International classification	:B64C0039020000, A61L0002100000, A61L0002180000, F24F0003160000, A61K0009510000
(31) Priority Document No	:NA
(32) Priority Date	:NA
(33) Name of priority country	:NA
(86) International Application No	:NA
Filing Date	:NA
(87) International Publication No	: NA
(61) Patent of Addition to Application Number	:NA
Filing Date	:NA
(62) Divisional to Application Number	:NA
Filing Date	:NA

(71)**Name of Applicant :**
1)Dr. Raghu Chandra Garimella
Address of Applicant :Department of Electrical and Electronics Engineering, Methodist College of Engineering and Technology, Osmania University, Abids, Hyderabad, Telangana, India. Telangana India
2)Dr. Siva Rama Krishna Madeti
3)Dyava SaiBharath Krishna Reddy
4)Nattala Shiva Kumar
5)Butharaju Saidivya
6)Takkala Soumya
7)Chepuri Sadvik
8)Mylarapu Soujanya
9)Namburi Nireekshana
10)Jarapala Ramesh Babu
(72)**Name of Inventor :**
1)Dr. Raghu Chandra Garimella
2)Dr. Siva Rama Krishna Madeti
3)Dyava SaiBharath Krishna Reddy
4)Nattala Shiva Kumar
5)Butharaju Saidivya
6)Takkala Soumya
7)Chepuri Sadvik
8)Mylarapu Soujanya
9)Namburi Nireekshana
10)Jarapala Ramesh Babu

(57) Abstract :
In an embodiment of the present disclosure, Remote controlled air vehicle based sanitizing system with payload carrier (2400) is disclosed. The major advantage of present disclosure is to disinfect the larger surfaces and places where minimal human interference is expected, like covid-19 infected areas, isolation wards, public places, offices, educational institutions, factories etc. In the present disclosure, two (02) vacuum filled sanitizer can (2000) are used to disinfect the areas and controlled wirelessly through the data-sender (2100) unit. Further, the proposed system is capable of carrying a payload of about 15kg (like medicines, sanitizers, mini oxygen cylinders, etc.).

No. of Pages : 46 No. of Claims : 10

(12) PATENT APPLICATION PUBLICATION
(21) Application No.202141020761 A
(19) INDIA
(22) Date of filing of Application :07/05/2021
(43) Publication Date : 11/06/2021

(54) Title of the invention : IOT BASED AUTOMATIC WATER CLARITY MEASUREMENT SYSTEM POWERED BY SOLAR CELLS

(51) International classification	:G01N0033180000, H05B0045100000, G01N0021590000, G01N0021530000, G01N0021310000
(31) Priority Document No	:NA
(32) Priority Date	:NA
(33) Name of priority country	:NA
(86) International Application No	:NA
Filing Date	:NA
(87) International Publication No	: NA
(61) Patent of Addition to Application Number	:NA
Filing Date	:NA
(62) Divisional to Application Number	:NA
Filing Date	:NA

(71)**Name of Applicant :**
1)Ms T D Subha
Address of Applicant :Assistant Professor, Department of ECE, R.M.K. Engineering College, Kavaraipettai, Chennai, Tamil Nadu. Tamil Nadu India
2)Mr T Joel
3)Mr V Ramkumar
4)Mr S P Vijaya Vardan Reddy
5)Ms V Femina
6)Ms K Dhivya
7)Mr S Jai Ganesh
8)Ms V Kannagi
9)Mr K Naresh Kumar Thapa
10)Dr P Ponmurugan
(72)**Name of Inventor :**
1)Ms T D Subha
2)Mr T Joel
3)Mr V Ramkumar
4)Mr S P Vijaya Vardan Reddy
5)Ms V Femina
6)Ms K Dhivya
7)Mr S Jai Ganesh
8)Ms V Kannagi
9)Mr K Naresh Kumar Thapa
10)Dr P Ponmurugan

(57) Abstract :
Water clarity is the most common indicator of water quality. The proposed innovation is an instrument which can automatically measure water clarity in place of manual measurement. The instrument is suspended by buoys at the water surface and uses solar energy to measure the light intensity of LED bulbs after passing through a water column; the result is then converted to Secchi depth by using a regression function. Measurement data are stored in a cloud server so that mobile users can access via an Internet connection. Three experiments were conducted to examine the instrument performance: (i) to ensure light intensity of the LED bulbs is strong enough to pass through the water column; (ii) to determine the regression relationship between the measured light intensity of the instrument and Secchi depth; and (iii) to evaluate the coefficient of variation (CV) of the measured water clarity.

No. of Pages : 11 No. of Claims : 7

(12) PATENT APPLICATION PUBLICATION
(19) INDIA
(22) Date of filing of Application :07/05/2021
(21) Application No.202141020773 A
(43) Publication Date : 11/06/2021

(54) Title of the invention : SENSOR BASED SMART BELT

(51) International classification	:A61H0003060000, G09B0021000000, A41F0009000000, G01S0013880000, A62B0033000000
(31) Priority Document No	:NA
(32) Priority Date	:NA
(33) Name of priority country	:NA
(86) International Application No	:NA
Filing Date	:NA
(87) International Publication No	: NA
(61) Patent of Addition to Application Number	:NA
Filing Date	:NA
(62) Divisional to Application Number	:NA
Filing Date	:NA

(71)**Name of Applicant :**
1)Mr. S. Palani
Address of Applicant :Sri Krishna College of Engineering and Technology, Kuniamuthur, Coimbatore. Tamilnadu, India. 641008. Tamil Nadu India
2)Dr. K. Ramesh Babu
3)Dr.J.Janet
4)Dr.V.Ragavi
5)Dr.S.Balakrishnan
6)Dr. G. Ignisha Rajathi
7)Mr. T .Vignesh
(72)**Name of Inventor :**
1)Mr. S. Palani
2)Dr. K. Ramesh Babu
3)Dr.J.Janet
4)Dr.V.Ragavi
5)Dr.S.Balakrishnan
6)Dr. G. Ignisha Rajathi
7)Mr. T .Vignesh

(57) Abstract :
In this digitized environmental survival, the technological warfare is an out-bursting criterion for the human survival. The varied techniques are growing in an avalanche pattern with very high impactful manner; it helps the human beings to survive easier. On the other hand, the visually impaired people suffering their day-to-day activities like walking on the road, getting things done in an orderly fashion etc. The solution for this problem is proposed by designing a Sensor Based Smart Belt • which can help the visually impaired person to walk safely without the help of others. It also identifiesstagnated water, small pits and gives indications to him/her. The belt worn by the person, senses the obstacle in full length of all degree height of the person, up and down the belt worn by the person i.e., object on road side, person in full height, water on pathway. This also works with 2 modes as in-built and manual choice mode to pick a vibration or alarm or voice instruction to intimate the person with the hindrance in front of him. The sensor stick has features which senses the obstacles and informs the visually impaired about the hindrance within seconds on the pathway only. This technology totally differs from the sensor stick. It stands on top with certain features such as easy to handle, comfortable charging and adaptable designing.

No. of Pages : 6 No. of Claims : 3

(12) PATENT APPLICATION PUBLICATION
(21) Application No.202141020794 A
(19) INDIA
(22) Date of filing of Application :07/05/2021
(43) Publication Date : 11/06/2021

(54) Title of the invention : SUSTAINABLE TREE BASED SMART POWER GENERATION SYSTEM

(51) International classification	:F03D0009250000, H02S0010120000, F03D0009000000, F03D0001020000, F03D0013200000
(31) Priority Document No	:NA
(32) Priority Date	:NA
(33) Name of priority country	:NA
(86) International Application No	:NA
Filing Date	:NA
(87) International Publication No	: NA
(61) Patent of Addition to Application Number	:NA
Filing Date	:NA
(62) Divisional to Application Number	:NA
Filing Date	:NA

(71)**Name of Applicant :**
1) Dr. V. S. ARULMURUGAN
Address of Applicant :DEPARTMENT OF EEE, EXCEL COLLEGE OF ENGINEERING AND TECHNOLOGY, KOMARAPALAYAM, NAMAKKAL - 637303. Tamil Nadu India
2)Mr. S. SANKARANANTH
3)Ms. C. RAJESWARI
4)Mr. R. ARUNKUMAR
5)Mr. J. CHANDRAMOHAN
6)Dr. R. GANDHI
7)Dr. M. MALARVIZHI
8)Dr. N. NANDHAGOPAL
(72)**Name of Inventor :**
1) Dr. V. S. ARULMURUGAN
2)Mr. S. SANKARANANTH
3)Ms. C. RAJESWARI
4)Mr. R. ARUNKUMAR
5)Mr. J. CHANDRAMOHAN
6)Dr. R. GANDHI
7)Dr. M. MALARVIZHI
8)Dr. N. NANDHAGOPAL

(57) Abstract :
An apparatus for generating electrical power. The apparatus comprises of a sustainable energy generator from the natural resources: sun and wind. The apparatus comprises a plurality of solar energy collectors for generating electricity from solar energy; a plurality of wind turbines for generating electricity from wind energy; a support structure having arms extending radially from a vertical shaft; wind turbines surrounded with solar panels are affixed to the arms; and the support structure comprising solar and wind power generators resembles a tree structure not affecting the beauty of nature and vegetation. The power generator is eco-friendly and produce noise-free and carbon-free power for the beneficial of the residential and commercial areas that are not suitable for the construction of traditional wind turbines.

No. of Pages : 21 No. of Claims : 10

(12) PATENT APPLICATION PUBLICATION
(21) Application No.202141020823 A
(19) INDIA
(22) Date of filing of Application :07/05/2021
(43) Publication Date : 11/06/2021

(54) Title of the invention : SYSTEM FOR MENTAL HEALTH DETECTION THROUGH TEXTEMOJI COMMUNICATION AND INTERNET ACTIVITIES USING MACHINE LEARNING

(51) International classification	:G06N0020000000, G16H0050300000, G06N0003080000, G16H0020700000, G06F0009480000
(31) Priority Document No	:NA
(32) Priority Date	:NA
(33) Name of priority country	:NA
(86) International Application No	:NA
Filing Date	:NA
(87) International Publication No	: NA
(61) Patent of Addition to Application Number	:NA
Filing Date	:NA
(62) Divisional to Application Number	:NA
Filing Date	:NA

(71)**Name of Applicant :**
1)Dr. Suhan
Address of Applicant :Associate Professor, Manipal Institute of Management, Manipal Academy of Higher Education, Manipal, Karnataka, India Karnataka India
2)Dr. Smitha Nayak
3)Dr.Ramya Shenoy
4)Dr. Sara Kunnath
5)Dr.Vishal Samartha
6)Dr. Ananth Prabhu G
7)Sujaya H
(72)**Name of Inventor :**
1)Dr. Suhan
2)Dr. Smitha Nayak
3)Dr.Ramya Shenoy
4)Dr. Sara Kunnath
5)Dr.Vishal Samartha
6)Dr. Ananth Prabhu G
7)Sujaya H

(57) Abstract :
The present invention relates to system for mental health detection through textemoji communication and internet activities using machine learning. The objective of the present invention is to solve the problems in the prior art technologies related to mental illness detection using the internet activities.

No. of Pages : 30 No. of Claims : 6

(12) PATENT APPLICATION PUBLICATION
(21) Application No.202141020845 A
(19) INDIA
(22) Date of filing of Application :07/05/2021
(43) Publication Date : 11/06/2021

(54) Title of the invention : SYSTEM AND DEVICE FACILITATING PURIFICATION MONITORING AND PREDICTION OF FILTERED WATER QUALITY

(51) International classification	:C02F0001000000, C02F0009000000, C02F0001440000, G01N0033180000, C02F0001280000	(71)**Name of Applicant :** **1)Lustral Innovations Private Limited** Address of Applicant :2 - C, Callundalla Block Regency, La Majada App Hennur Main Road, Bangalore - 560043, Karnataka, India. Karnataka India
(31) Priority Document No	:NA	(72)**Name of Inventor :**
(32) Priority Date	:NA	**1)PATNAIK, Aditya**
(33) Name of priority country	:NA	**2)NAVADA, Shreyas V**
(86) International Application No	:NA	
Filing Date	:NA	
(87) International Publication No	: NA	
(61) Patent of Addition to Application Number	:NA	
Filing Date	:NA	
(62) Divisional to Application Number	:NA	
Filing Date	:NA	

(57) Abstract :
The present disclosure relates generally to a water purification system. The water purification system is an IoT based AI enabled water purifier integrated with ultrafiltration, ultraviolet unit and a mineralizer. The water purification system tracks a TDS, pH score, filtration candles quality, auto water spillage detection, total water consumption, turbidity, total water quality and the like. The AI enabled system may further predict daily water consumption and may prevent wastage of water by determining the average water required for drinking and cooking by one or more users.

No. of Pages : 54 No. of Claims : 10

(12) PATENT APPLICATION PUBLICATION
(21) Application No.202141020875 A
(19) INDIA
(22) Date of filing of Application :07/05/2021
(43) Publication Date : 11/06/2021

(54) Title of the invention : NANO PHOTO DIODE ARRAY (NPDA) FOR SUBRETINAL IMPLANT

(51) International classification	:A61N0001050000, A61B0003120000, A61F0002140000, H01L0027144000, A61K0038050000
(31) Priority Document No	:NA
(32) Priority Date	:NA
(33) Name of priority country	:NA
(86) International Application No	:NA
Filing Date	:NA
(87) International Publication No	: NA
(61) Patent of Addition to Application Number	:NA
Filing Date	:NA
(62) Divisional to Application Number	:NA
Filing Date	:NA

(71)**Name of Applicant :**
1)Mr. Vijai Meyappan
Address of Applicant :Assistant Professor, Department of Electronics and Communication Engineering, M.I.E.T Engineering college, Trichy-620007, Tamilnadu, India Tamil Nadu India
2)Dr. Joseph Daniel R
(72)**Name of Inventor :**
1)Mr. Vijai Meyappan
2)Dr. Joseph Daniel R

(57) Abstract :
The developing country like India is still starving for the improvement in health sector. The age associated Macula degeneration and Retinitis Pigmentosa are the major diseases that particularly affect the elderly people around the world. This work aimed to improve the photo sensing devices that helps to bring back the vision. This invention provides an organic based artificial retina device (Nano photodiode array) that includes carbon nano tube and graphene. This nanomaterial generate electrical pulses under incident light, this helps to stimulate the photoreceptor cells in the retina this helps the restoration of vision those who has retinal problems. Although the chosen nanomaterial complexes is biocompatible and improved electrical performance when compared to other nano blend. Overall this nano complex is a good candidate for sub retinal implants.

No. of Pages : 29 No. of Claims : 8

(12) PATENT APPLICATION PUBLICATION
(21) Application No.202141020890 A
(19) INDIA
(22) Date of filing of Application :07/05/2021
(43) Publication Date : 11/06/2021

(54) Title of the invention : Graphical, Hierarchical and Orthogonal Maximum Power Point Tracking Statecharts for Photovoltaic System

(51) International classification	:G05F0001670000, H02J0003380000, G06F0119060000, G06F0030330000, G05B0017020000	(71)**Name of Applicant :**
(31) Priority Document No	:NA	**1)Dr. Rama Sudha Kasibhatla**
(32) Priority Date	:NA	Address of Applicant :Professor, Department of Electrical Engineering, AU College of Engineering (A), Andhra University, Visakhapatnam, Andhra Pradesh-, India. Andhra Pradesh India
(33) Name of priority country	:NA	**2)Dr. Vijaya Santhi Rajamahanthi**
(86) International Application No	:PCT//	**3)Ms. Venkat Pankaj Lahari Molleti**
Filing Date	:01/01/1900	**4)Dr. Chandra Sekhar Akkapeddi**
(87) International Publication No	: NA	(72)**Name of Inventor :**
(61) Patent of Addition to Application Number	:NA	**1)Dr. Rama Sudha Kasibhatla**
Filing Date	:NA	**2)Dr. Vijaya Santhi Rajamahanthi**
(62) Divisional to Application Number	:NA	**3)Ms. Venkat Pankaj Lahari Molleti**
Filing Date	:NA	**4)Dr. Chandra Sekhar Akkapeddi**

(57) Abstract :
Exemplary aspects of the present disclosure are directed towards the design and development of Graphical, Hierarchical and Orthogonal Maximum Power Point Tracking Statecharts for Photovoltaic System. The primary motivation for this invention arises from the fact that integrated PV systems demand MPP tracking speeds in orders of sub- milliseconds. Among the many available MPPT algorithms, the most widely used are Perturb & Observe (P&O) and Incremental conductance (Inc-Con) algorithms, for which statechart-MPPT controller models are developed in this invention. These graphical statechart-MPPT controllers achieved tracking speeds in orders of sub-milliseconds (as low as 0.11ms), under varying irradiance and load conditions in the PV system. Graphical P&O Statechart-MPPT controller(Fig.100) is modelled, designed and deployed in target embedded controller, along with the incorporation of hierarchy. All transition codes and state-action codes are defined appropriately (Fig. 200). Hierarchy is an essential feature of the developed statechart-MPPT controllers, which improves abstraction in the controller model as well as readability. It also reduces the overall required number of transitions in the design. Graphical Inc-con Statechart-MPPT controller(Fig.300) is modelled, designed and deployed in target embedded controller, and incorporates hierarchy and orthogonality. All transition codes and state-action codes are defined appropriately (Fig. 400). Hierarchy is an essential feature of the developed statechart-MPPT controllers, which allows the system to be active in more than one subsystem simultaneously. This allows parallel or concurrent monitoring of various subsystems in the overall system, without hampering the execution and tracking speeds of the MPPT controller of the PV system.

No. of Pages : 15 No. of Claims : 6

(12) PATENT APPLICATION PUBLICATION
(21) Application No.202141020891 A
(19) INDIA
(22) Date of filing of Application :07/05/2021
(43) Publication Date : 11/06/2021

(54) Title of the invention : INTELLIGENT SMART MONITORING SYSTEM FOR EARLY DETECTION OF DIABETIC FOOT ULCER

(51) International classification	:A61B0005000000, G16H0050300000, A61B0005026000, A61K0036280000, A61B0005010000
(31) Priority Document No	:NA
(32) Priority Date	:NA
(33) Name of priority country	:NA
(86) International Application No	:NA
Filing Date	:NA
(87) International Publication No	: NA
(61) Patent of Addition to Application Number	:NA
Filing Date	:NA
(62) Divisional to Application Number	:NA
Filing Date	:NA

(71)**Name of Applicant :**
1)Dr. A. Sivagami
Address of Applicant :Associate Professor, Institute of Electronics and communication Engineering Saveetha School of Engineering, SIMATS, Chennai 602 105 Tamilnadu Tamil Nadu India
2)Dr. Annie Grace Vimala
3)Dr. K. Michael Angelo
4)Dr. A. Raja
5)Dr. Bhaskarrao Yakkala
6)Mr. Vijai Meyappan
7)Dr. Gowrishankar.K
8)Dr. K. Baskaran
9)Dr. Kiran George
(72)**Name of Inventor :**
1)Dr. A. Sivagami
2)Dr. Annie Grace Vimala
3)Dr. K. Michael Angelo
4)Dr. A. Raja
5)Dr. Bhaskarrao Yakkala
6)Mr. Vijai Meyappan
7)Dr. Gowrishankar.K
8)Dr. K. Baskaran
9)Dr. Kiran George

(57) Abstract :
Diabetic Mellitus is a chronic disease that causes serious health problems, which gradually lead to severe vascular problems and nerve damages. That problem leads to an increase in the chances of foot ulcers prolong to even lower leg amputation. The diabetic cases are significantly increasing over the years in the world. However still diabetes is a major challenge for researchers, though many cases occur of that the diabetic foot ulcer (DFU) is one of the critical factors. But still, they fail to monitor the blood flow level, the temperature of the skin, humidity, and most important parameter that forces acting on pressure points. But this continuous monitoring may help the physician to identify or early detection of foot ulcer formation in the patients. Therefore in this invention, we propose an intelligent monitoring system based on continuous monitoring of the above-mentioned parameters. This system measures the value and process of the parameter within the module. Further, this module is connected with patient mobile or gadgets through IoT, this helps for store complete record of that foot forces on pressure point values, Temperature & humidity information. By merely viewing the graphical information the physician can easily provide treatment for the foot ulcer prone areas or high-pressure point. This processing time taken is really reduced and it is an added advantage for the patients who need not waiting for a long time for the results. This invention helps to improve the quality of life for type1 diabetes mellitus patients.

No. of Pages : 31 No. of Claims : 6

(12) PATENT APPLICATION PUBLICATION
(21) Application No.202141020912 A
(19) INDIA
(22) Date of filing of Application :08/05/2021
(43) Publication Date : 11/06/2021

(54) Title of the invention : AUTOMATED SEWAGE CHANNEL BLOCKAGE DETECTION SYSTEM AND METHODS OF INFORMING THEREOF

(51) International classification	:H04W0084180000, G08C0017020000, G08B0025100000, F17D0005020000, G01N0021330000
(31) Priority Document No	:NA
(32) Priority Date	:NA
(33) Name of priority country	:NA
(86) International Application No	:NA
Filing Date	:NA
(87) International Publication No	: NA
(61) Patent of Addition to Application Number	:NA
Filing Date	:NA
(62) Divisional to Application Number	:NA
Filing Date	:NA

(71)**Name of Applicant :**
1)Vergin Raja Sarobin M
Address of Applicant :Assistant Professor Senior School of Computer Science and Engineering, Vellore Institute of Technology, Chennai Tamil Nadu India
2)Jani Anbarasi L
3)Yasashvini R
4)Berin Shalu S
5)Modigari Narendra
6)Dhanya D
(72)**Name of Inventor :**
1)Vergin Raja Sarobin M
2)Jani Anbarasi L
3)Yasashvini R
4)Berin Shalu S
5)Modigari Narendra
6)Dhanya D

(57) Abstract :
The present invention herein relates to an automated sewage channel blockage detection system, more particularly a stand-alone module to detect the water level and concentration of gaseous substances inside the sewage channel, more particularly a networked alarming system to inform the occurrence of blockage with location information, in real-time efficiently, comprises a plurality of wireless sensor node [200], said each wireless sensor node, comprises a central computational unit [201], an ultrasonic sensor [202], a flow sensor [203], a wifi module [204], a battery unit [205], a gas sensor [206], a global positioning system [207], and a global system for mobile communication [208] module. Said wireless sensor node [200] in a larger number deployed throughout a sewage channel/pipeline [100] inside to measure sewage flow and level along with the concentration of harmful gas for an instance methane.
FIGURE 1

No. of Pages : 16 No. of Claims : 10

(12) PATENT APPLICATION PUBLICATION
(21) Application No.202141020952 A
(19) INDIA
(22) Date of filing of Application :08/05/2021
(43) Publication Date : 11/06/2021

(54) Title of the invention : Microwave-Hydrothermal synthesis of BaTiO3 + NiCuZnFe2O4 nanocomposites

(51) International classification	:B82Y0030000000, H01F0001340000, C04B0035260000, C01G0049000000, B82Y0040000000
(31) Priority Document No	:NA
(32) Priority Date	:NA
(33) Name of priority country	:NA
(86) International Application No	:PCT//
Filing Date	:01/01/1900
(87) International Publication No	: NA
(61) Patent of Addition to Application Number	:NA
Filing Date	:NA
(62) Divisional to Application Number	:NA
Filing Date	:NA

(71)**Name of Applicant :**
1)Dr. Sadhana Katlakunta,Assistant Professor/Department of Physics, University College of Science
Address of Applicant :University College of Science, Osmania University, Saifabad, Hyderabad, Telangana-500004 Telangana India
2)Gaddameedi Sriramulu, Assistant Professor/Department of Physics, University College of Science
3)P. Neeraja, Assistant Professor/Department of Physics, University College of Science
4)N. Maramu, Assistant Professor/Department of Physics, Kakatiya Institute of Technology and Science.
5)Dr. B. Ravinder Reddy,Assistant Professor/Department of Physics, University College of Science
6)G. Padmasree, Associate Professor/ Department of Humanities & Sciences, Stanley College of Engineering and Technology for Women
(72)**Name of Inventor :**
1)Dr. Sadhana Katlakunta,Assistant Professor/Department of Physics, University College of Science
2)Gaddameedi Sriramulu, Assistant Professor/Department of Physics, University College of Science
3)P. Neeraja, Assistant Professor/Department of Physics, University College of Science
4)N. Maramu, Assistant Professor/Department of Physics, Kakatiya Institute of Technology and Science.
5)Dr. B. Ravinder Reddy,Assistant Professor/Department of Physics, University College of Science
6)G. Padmasree, Associate Professor/ Department of Humanities & Sciences, Stanley College of Engineering and Technology for Women

(57) Abstract :
Abstract The nano-sized BaTiO3 and NiCuZn ferrite powders were synthesized using Microwave-Hydrothermal (M-H) system at 160—¦C/45 min. The ferroelectric and ferrite phases were confirmed by the XRD and surface morphologies were studied by SEM and TEM. The size of the powders that were synthesized using M-H system was found to be 4060 nm. The xBaTiO3 + (1 ˆ’ x) NiCuZnFe2O4 nano-composites were prepared at different weight percentages. The room temperature hysteresis loops were taken on the present composite samples in the field of 5 kOe. The value of coercivity and saturation magnetization was found to be increasing with the decrease of BaTiO3 content in the composites. The frequency variation dielectric constant (Îµ), dissipation factor (D), initial permeability (µi) and quality factor (Q) were studied at room temperature in the frequency range of 1 kHz 1 MHz region. From these studies it was observed that the present composites were useful for the fabrication of Multilayer Chip Inductors (MLCI).

No. of Pages : 17 No. of Claims : 5

(12) PATENT APPLICATION PUBLICATION
(21) Application No.202141020953 A
(19) INDIA
(22) Date of filing of Application :08/05/2021
(43) Publication Date : 11/06/2021

(54) Title of the invention : IMPROVED MAGNETIC PROPERTIES OF CR3+ DOPED SRFE12O19 SYNTHESIZED VIA MICROWAVE HYDROTHERMAL ROUTE

(51) International classification	:H01F0041020000, H01S0003160000, C04B0035626000, B22F0009220000, C03C0004000000	(71)**Name of Applicant :** **1)Dr. Sadhana Katlakunta,Assistant Professor/Department of Physics, University College of Science.** Address of Applicant :University College of Science, Osmania University, Saifabad, Hyderabad, Telangana-500004. Telangana India
(31) Priority Document No	:NA	(72)**Name of Inventor :** **1)Dr. Sadhana Katlakunta,Assistant Professor/Department of Physics, University College of Science.**
(32) Priority Date	:NA	
(33) Name of priority country	:NA	
(86) International Application No	:NA	
Filing Date	:NA	
(87) International Publication No	: NA	
(61) Patent of Addition to Application Number	:NA	
Filing Date	:NA	
(62) Divisional to Application Number	:NA	
Filing Date	:NA	

(57) Abstract :
Abstract Cr doped Sr-hexaferrites (SrCrxFe12-xO19) were prepared using microwave-hydrothermal method and sintered at 950°C/90 min using single mode microwave furnace. With increasing Cr3+ content, the lattice parameters changed anisotropically, where ˜a™ increases and ˜c™ decreases. The average grain sizes of sintered hexaferrite are in the range of 280660 nm. XPS spectra shows that for higher Cr3+ content i.e., x > 0.3, both Fe2+ and Fe3+ ions are present in the crystal structure. With Cr3+ doping saturation magnetization systematically decreased and coercivity increased. Magnetic hyperfine analysis using Mossbauer technique indicates that Cr3+ ions preferentially occupy 2a, 12k, and 4f1 sites.

No. of Pages : 21 No. of Claims : 4

(12) PATENT APPLICATION PUBLICATION
(21) Application No.202141020956 A
(19) INDIA
(22) Date of filing of Application :08/05/2021
(43) Publication Date : 11/06/2021

(54) Title of the invention : A Compact Metamaterial integrated slot patch Penta-band Antenna For Wi-MAX, WLAN, Satellite band and X-band Applications

(51) International classification	:H01Q0009040000, H01Q0001480000, H01Q0001500000, H01Q0001380000, H03F0001560000
(31) Priority Document No	:NA
(32) Priority Date	:NA
(33) Name of priority country	:NA
(86) International Application No	:PCT//
Filing Date	:01/01/1900
(87) International Publication No	: NA
(61) Patent of Addition to Application Number	:NA
Filing Date	:NA
(62) Divisional to Application Number	:NA
Filing Date	:NA

(71)**Name of Applicant :**
1)P.Ezekiel julian
Address of Applicant :School of ECE, REVA University Rukmini Knowledge Park, Kattigenahalli, Yelahanka, Bengaluru, Karnataka 560064 Karnataka India
2)Vinay D
3)Pramod kumar
4)Muyisa Wasukundi
5)Ravikumar M G
6)SUBHASH B K
(72)**Name of Inventor :**
1)P.Ezekiel julian
2)Vinay D
3)Pramod kumar
4)Muyisa Wasukundi
5)Ravikumar M G
6)SUBHASH B K

(57) Abstract :
A penta band loaded with complementary octagonal split ring resonator (COSRR) is reported. The antenna has a size of 0.16Î»_l—0.16Î»_l—0.01Î»_l, at lower frequency band of 3.33 GHz. The antenna consists of a rectangular slot is placed in the ground plane and complementary octagonal split ring resonator in the radiating patch, which independently resonates lower frequency at 3.33 GHz and other four bands at 5.01GHz, 5.28GHz, 7.46GHz, and 9.48GHz respectively. It is observed that the proposed structure is having better impedance matching, gain, efficiency and stable radiation pattern at targeted frequencies and used for Wi-MAX, WLAN, Satellite band and X-band applications.

No. of Pages : 14 No. of Claims : 3

(12) PATENT APPLICATION PUBLICATION
(19) INDIA
(22) Date of filing of Application :09/05/2021
(21) Application No.202141020964 A
(43) Publication Date : 11/06/2021

(54) Title of the invention : TILED SOLAR DISTILLATION SYSTEM

(51) International classification	:C02F0001140000, C02F0001180000, B01D0005000000, B01D0001000000, F24S0010600000
(31) Priority Document No	:NA
(32) Priority Date	:NA
(33) Name of priority country	:NA
(86) International Application No	:NA
Filing Date	:NA
(87) International Publication No	: NA
(61) Patent of Addition to Application Number	:NA
Filing Date	:NA
(62) Divisional to Application Number	:NA
Filing Date	:NA

(71)**Name of Applicant :**
1)Dr.S.Joe Patrick Gnanaraj
Address of Applicant :Associate Professor Department of Mechanical Engineering Francis Xavier engineering college Tirunelveli. Tamil Nadu India
2)Dr.Zeenathul Farida Abdul Gani, Francis Xavier engineering college
3)Dr.M.Appadurai, Dr. Sivanthi Aditanar college of Engineering
4)Mr.M.Muthu Kumar, Kalasalingam Academy of Research and Education
5)Dr.M.Jinnah Sheik Mohamed, University of Technology and Applied sciences -Shinas
6)A. Kandasamy, Francis Xavier Engineering College
7)Dr.K.Athiappan, Jyothi Engineering College
8)K.S.Maheswari, Kalasalingam Academy of Research and Education
9)I. Syed Abjimiah, Francis Xavier Engineering College
10)Dr.S.Nagarajan, Tisaiyanvilai
11)Dr. V.Kannan, Thoothukudi
(72)**Name of Inventor :**
1)Dr S Ramachandran, CMR Institute of Technology
2)Dr.V.Kannan, Thoothukudi
3)Dr.S.Joe Patrick Gnanaraj, FXEC
4)Dr.M.Jinnah Sheik Mohamed, University of Technology and Applied sciences -Shinas
5)A. Kandasamy, FXEC
6)P. LEELA JANCY, Sri Sai Ram Institute of Technology
7)Dr.K.Athiappan, Jyothi Engineering College
8)K.S.Maheswari, Kalasalingam Academy of Research and Education
9)M.MUTHU KUMAR, Kalasalingam Academy of Research and Education
10)I.SYED ABJIMIAH, FXEC
11)Dr.S.Nagarajan, Tisayanvilai
12)Dr.M.Appadurai, Dr. Sivanthi Aditanar college of Engineering

(57) Abstract :
The invention is about a solar still made up of tiles that is used to produce pure drinking water by means of distillation process. Generally, the output or yield of solar still (i.e. the pure palatable water) received, depends upon number of factors, namely material of lid, color of tank/sink base, etc. Hence, a still is fabricated in a manner such that a square basin is surrounded by alternate rectangular and triangular stills so as to collect the distilled water effectively. Each still are divided into chambers where solar energy can be obtained. The basin and the arms are covered by any material and they are inclined at a particular angle to obtain better distillate water. The average amount of distillate produced through this process is 18950 ml/per day. This entire solar still is scalable as per the users need.

No. of Pages : 16 No. of Claims : 5

(12) PATENT APPLICATION PUBLICATION
(21) Application No.202141020965 A
(19) INDIA
(22) Date of filing of Application :09/05/2021
(43) Publication Date : 11/06/2021

(54) Title of the invention : VIRTUAL MOM RESPONSIVE BABY MONITORING TOY

(51) International classification	:G08B0021020000, A63H0033000000, G06N0005040000, G06N0020000000, G09B0019000000
(31) Priority Document No	:NA
(32) Priority Date	:NA
(33) Name of priority country	:NA
(86) International Application No	:NA
Filing Date	:NA
(87) International Publication No	: NA
(61) Patent of Addition to Application Number	:NA
Filing Date	:NA
(62) Divisional to Application Number	:NA
Filing Date	:NA

(71)**Name of Applicant :**
1)VNR VIGNANA JYOTHI INSTITUTE OF ENGINEERING AND TECHNOLOGY
Address of Applicant :Vignana Jyothi Nagar, Pragathi Nagar, Nizampet (S.O), Hyderabad, Telangana, 500 090, India Telangana India
(72)**Name of Inventor :**
1)V. BABY
2)Dr. S. NAGINI
3)K. JHANSI LAKSMI BAI
4)Dr. SAGAR YERUVA
5)G. YASHWANTH
6)B. JANAKI RAM
7)A. RIKHILA
8)Dr. D. N. VASUNDHARA
9)N. V. SAILAJA
10)A. MADHAVI

(57) Abstract :
ABSTRACT VIRTUAL MOM RESPONSIVE BABY MONITORING TOY • The virtual mom is a responsive baby monitoring toy used to reduce the stress on working mothers. As working mothers find it tedious to manage both work and taking care of the baby, this toy helps them monitor the baby when they're at work. It's a smart toy, equipped with sensors to track different movements /actions of the baby/infant. Trained Deep Learning models and some sensor data help in interpreting the movements/actions of the baby. The inferences made by the sensors are sent to a server through Wi-Fi, from where the mobile application can access and display them. The mobile application acts as the two-way communicator which conveys the moods and actions of the baby to the mother and then returns the chosen style of response from the mother to the toy. The toy provides a provision for the mother to either speak to the baby or play pre-recorded audio clips or play music which makes the baby feel relaxed. The response received from the mother's end is then processed and the toy performs the required action to calm the baby. When the mother is at work, she can observe the kid™s activities. Some working parents employ babysitters and caretakers to take care of their children while they™re away. Sometimes these caretakers don™t perform their duty genuinely and using this toy, parents can also monitor how the caretakers are behaving with the child. The mother can also send a response whenever she wants to talk and engage the baby, hence making virtual parenting possible, and successful. Fig.2. Circuit Diagram

No. of Pages : 10 No. of Claims : 6

(12) PATENT APPLICATION PUBLICATION
(21) Application No.202141020966 A
(19) INDIA
(22) Date of filing of Application :09/05/2021
(43) Publication Date : 11/06/2021

(54) Title of the invention : AEROSOL USING INTERNET OF THINGS

(51) International classification	:A61M0015000000, G06Q0050220000, A61K0009000000, A61M0011000000, A61J0007040000
(31) Priority Document No	:NA
(32) Priority Date	:NA
(33) Name of priority country	:NA
(86) International Application No	:NA
Filing Date	:NA
(87) International Publication No	: NA
(61) Patent of Addition to Application Number	:NA
Filing Date	:NA
(62) Divisional to Application Number	:NA
Filing Date	:NA

(71)**Name of Applicant :**
1)Dr.K.SREELATHA
Address of Applicant :St. PETERS ENGINEERING COLLEGE (A), OPP. TS FOREST ACADEMY DULLAPALLY, MAISAMMAGUDA, MEDCHAL, HYDERABAD, TELANGANA - 500043. Telangana India
2)Dr.DIANA MOSES
3)Dr.A.ANJAIAH
(72)**Name of Inventor :**
1)Dr.A.ANJAIAH
2)Dr.K.SREELATHA
3)S.MEGHANA
4)M.AKANKSHA
5)P.SHIVANI

(57) Abstract :
Aerosol using the internet of things aims at implementing and designing a smart inhaler that provides a measure and aerosolized dose of a wide assortment of medication that is administered to the lungs and air pathways the key feature of the IoT based Smart inhaler is that it helps the patients adhere to their medication routine, and also allows the physicians to monitor their patients remotely. The smart asthma inhaler precisely archives usage- when each dose is taken, it transfers this status to doctors and helps keep the illnesses in check. This technology also gives automatically generated reminders, through the app, informing the patient to use the inhaler whenever necessary.

No. of Pages : 27 No. of Claims : 6

(12) PATENT APPLICATION PUBLICATION
(21) Application No.202141020971 A
(19) INDIA
(22) Date of filing of Application :09/05/2021
(43) Publication Date : 11/06/2021

(54) Title of the invention : OBSTACLE DETECTOR FOR VISUALLY IMPAIRED PEOPLE

(51) International classification	:A61H0003060000, G09B0021000000, G08G0001160000, G01S0015931000, A61F0009080000
(31) Priority Document No	:NA
(32) Priority Date	:NA
(33) Name of priority country	:NA
(86) International Application No	:NA
Filing Date	:NA
(87) International Publication No	: NA
(61) Patent of Addition to Application Number	:NA
Filing Date	:NA
(62) Divisional to Application Number	:NA
Filing Date	:NA

(71)**Name of Applicant :**
1)Dr.K.SREELATHA
Address of Applicant :St. PETERS ENGINEERING COLLEGE (A), OPP. TS FOREST ACADEMY DULLAPALLY, MAISAMMAGUDA, MEDCHAL, HYDERABAD, TELANGANA - 500043. Telangana India
2)Dr.A.ANJAIAH
3)Dr.DIANA MOSES
(72)**Name of Inventor :**
1)Dr.K.SREELATHA
2)Dr.DIANA MOSES
3)Dr.A.ANJAIAH
4)B.VAISHNAVI
5)D.VENU
6)M.SHALAKA

(57) Abstract :
Obstacle detection and warning can improve the mobility as well as the safety of visually impaired people, especially in unfamiliar environments. For this, firstly, obstacles are detected and localized and then the information of the obstacles will be sent to the visually impaired people by using different modalities such as voice, tactile, vibration. Earlier navigation systems were expensive and time-consuming when used in day-to-day life. Our proposed system uses an ultrasonic sensor to detect the obstacles and processes them using a microcontroller which is of an affordable cost. Once the obstacle is detected, the distance is calculated at which the obstacle is located and warns the user according to the range in which the obstacle is present. The proposed system aims at developing a cost-effective system, therefore, increasing the feasibility for the visually impaired people to walk by themselves in almost all environments.

No. of Pages : 22 No. of Claims : 5

(12) PATENT APPLICATION PUBLICATION
(21) Application No.202141020988 A
(19) INDIA
(22) Date of filing of Application :10/05/2021
(43) Publication Date : 11/06/2021

(54) Title of the invention : IOT DRIVEN SMART PISCICULTURE MONITORING AND CONTROL SYSTEM

(51) International classification	:G07C0009000000, A01K0063040000, H04L0029080000, B01D0053840000, G01N0033180000
(31) Priority Document No	:NA
(32) Priority Date	:NA
(33) Name of priority country	:NA
(86) International Application No	:NA
Filing Date	:NA
(87) International Publication No	: NA
(61) Patent of Addition to Application Number	:NA
Filing Date	:NA
(62) Divisional to Application Number	:NA
Filing Date	:NA

(71)**Name of Applicant :**
1)Polly Thomas
Address of Applicant :Department of Electrical & Electronics Engineering SAINTGITS College of Engineering, Kottukulam Hills Pathamuttom P. O Kottayam 686532 KERALA Kerala India
2)Farah Fathima Raheem
3)Sanju Joseph Abraham
4)Sidharth Sivanraj
5)Vaishnav Nair S
(72)**Name of Inventor :**
1)Polly Thomas
2)Farah Fathima Raheem
3)Sanju Joseph Abraham
4)Sidharth Sivanraj
5)Vaishnav Nair S

(57) Abstract :
Internet of Things (IoT) has now emerged as a governing trend in the electronics era with cloud services and remotely operable electronic systems dominating the ever-increasing electronics product segment. This has now paved the way for a new breed of farms with fully automated farming procedures and mechanized labor giving rise to greater yield and higher quality than previously thought possible. The proposed system aims at bringing the trend of automation to fish farming. This system based on a low cost energy efficient system is connected to multiple sensors allowing it to measure various water quality parameters such as temperature, pH, TDS, Ammonia, salinity, electrical conductivity, water level and light intensity. The proposed system also integrates the control of the various motors used in pisciculture. The proposed system is a 2 part system- it has a measuring part which measures all the values and sends it to a controller and a controller part which controls the various motors associated with the fish farm using relays. Real-time control and monitoring is made possible using a mobile app that allows the user to control and monitor the entire system from any part of the world.

No. of Pages : 17 No. of Claims : 5

(12) PATENT APPLICATION PUBLICATION
(21) Application No.202141020989 A
(19) INDIA
(22) Date of filing of Application :10/05/2021
(43) Publication Date : 11/06/2021

(54) Title of the invention : CROWD DETECTION CAMERA TO SPEKE THE MAINTAIN AND IDENTIFY THE SUSPECT USING AI-BASED PROGRAMMING.

(51) International classification	:G06K0009000000, G06N0003000000, G06N0020000000, G06N0003040000, G06N0007020000
(31) Priority Document No	:NA
(32) Priority Date	:NA
(33) Name of priority country	:NA
(86) International Application No	:NA
Filing Date	:NA
(87) International Publication No	: NA
(61) Patent of Addition to Application Number	:NA
Filing Date	:NA
(62) Divisional to Application Number	:NA
Filing Date	:NA

(71)**Name of Applicant :**
1)K. Anusha (Assistant Professor)
Address of Applicant :Dept. of CSE, Geethanjali College of Engineering and Technology, Hyderabad, Telangana 501301, India. E-mail: anushareddy.kallem@gmail.com Telangana India
2)G Swapna (Assistant Professor)
3)Botla Mamatha (Assistant Professor)
4)P. Harish (Assistant Professor)
5)Dr. K. Suneetha (Professor)
6)Dr. C. Sushama (Associate Professor)
7)Dr. K. Venkata Nagendra (Associate Professor)
8)P. Yogendra Prasad (Assistant Professor)
9)Dr. Manmohan Singhal
10)Dr. M. Sunil Kumar (Professor)
(72)**Name of Inventor :**
1)K. Anusha (Assistant Professor)
2)G Swapna (Assistant Professor)
3)Botla Mamatha (Assistant Professor)
4)P. Harish (Assistant Professor)
5)Dr. K. Suneetha (Professor)
6)Dr. C. Sushama (Associate Professor)
7)Dr. K. Venkata Nagendra (Associate Professor)
8)P. Yogendra Prasad (Assistant Professor)
9)Dr. Manmohan Singhal
10)Dr. M. Sunil Kumar (Professor)

(57) Abstract :
ABSTRACT Our Invention Crowd Detection Camera to Speke the Maintain and Identify the Suspect Using AI-Based Programming is an advanced computer-implemented method, computer program for detecting anomalous human behavior of advanced computing devices are real-time provided. The Invention is also a method of creating human artificial intelligence in machines and computer software is presented here as well as methods to simulate human reasoning thought and behavior and also the invention serves as a universal artificial intelligence program that will store, retrieve, analyze, assimilate, predict the future and modify information in a manner and fashion which is similar to human beings and which will provide users with a software application that will serve as the main intelligence of one or a multitude of computer based programs, software applications, machines or compilation of machinery. The invention is to a Smart appliance with built-in cameras, such as the Nest Cam and Amazon Echo Look, are becoming pervasive and also a they hold the promise of bringing high fidelity, contextually rich sensing into our homes, workplaces and other environments. Despite recent and impressive advances, computer vision systems are still limited in the types of sensing questions they can answer, and more importantly, do not easily generalize across diverse human environments and also a in response, researchers have investigated hybrid crowd- and AI-powered methods that collect human labels to bootstrap automatic processes.

No. of Pages : 16 No. of Claims : 6

(12) PATENT APPLICATION PUBLICATION
(21) Application No.202141020991 A
(19) INDIA
(22) Date of filing of Application :10/05/2021
(43) Publication Date : 11/06/2021

(54) Title of the invention : INNOVATIVE APROACHES FOR EFFECTIVE MANAGERIAL COMPETENCY DEVELOPMENT (MCD) ADOPTED BY SIVA SIVANI INSTITUTE OF MANAGEMENT (SSIM)

(51) International classification	:G06Q0010060000, G06Q0010000000, G09B0007020000, G06Q0030000000, G06F0040470000
(31) Priority Document No	:NA
(32) Priority Date	:NA
(33) Name of priority country	:NA
(86) International Application No	:NA
Filing Date	:NA
(87) International Publication No	: NA
(61) Patent of Addition to Application Number	:NA
Filing Date	:NA
(62) Divisional to Application Number	:NA
Filing Date	:NA

(71)**Name of Applicant :**
1)Siva Sivani Institute of Management
Address of Applicant :NH-44 Kompally Secenderabad Telangana India - 500100 Telangana India
(72)**Name of Inventor :**
1)Smt. Aarathy Sampathy, President & Chief Executive Officer/ SSIM
2)Dr. Sailesh Sampathy, Vice President & Deputy Chief Executive Officer/ SSIM
3)Mrs. Deepika Sampathy, Associate Vice President / SSIM
4)Dr. S.V. Ramana Rao, Director / SSIM
5)Dr. N.C. Rajya Lakshmi, Professor / SSIM

(57) Abstract :
Abstract The competency movement is gaining unmistakable momentum and popularity in Indian organizations. There is a lack of unanimity as to what is meant by the term ˜competence™, due to the lack of consensus in efforts to define effective management. Apart from this, there is also an underlying uncertainty about the practicability of establishing generic managerial competencies. Most sets of management competencies • are developed without recognition of their inherent contradictions and without due regard to their conceptuality. The main aim of this work is to analyse the different competency studies done by SSIM so far and other research findings related to the methodology used in identifying managerial competencies. Second, this study also examines the extent to which there are competencies that are generic to professions, through Company Fact Presentation, Book Review, Industry review, Company review and Article Review Sessions and finally effective usage of OBE in MCD

No. of Pages : 11 No. of Claims : 5

(12) PATENT APPLICATION PUBLICATION
(21) Application No.202141021009 A
(19) INDIA
(22) Date of filing of Application :10/05/2021
(43) Publication Date : 11/06/2021

(54) Title of the invention : A BROILER BREEDER BIRDS FEED MANAGEMENT AND CONTROL SYSTEM AND METHOD THEREOF

(51) International classification	:H02J0050120000, A01K0039012000, A01K0005020000, A01K0039010000, H02J0050800000	(71)**Name of Applicant :** **1)GOWRISANKAR, Dr. T M.** Address of Applicant :17, Sri Ram Avenue, Pappanaickenpalayam, Coimbatore, Tamil Nadu Tamil Nadu India
(31) Priority Document No	:NA	(72)**Name of Inventor :**
(32) Priority Date	:NA	**1)BABU, C**
(33) Name of priority country	:NA	
(86) International Application No	:NA	
Filing Date	:NA	
(87) International Publication No	: NA	
(61) Patent of Addition to Application Number	:NA	
Filing Date	:NA	
(62) Divisional to Application Number	:NA	
Filing Date	:NA	

(57) Abstract :
Disclosed herein an uniquely designed automatic systems and methods for accurate and precision feeding of the broiler breeder birds, wherein Feeding System comprising a Reciprocating Feeding module and wherein said Reciprocating Feeding module is moduled at lower and upper tiers of each row of the cages through a feed delivery pipe

No. of Pages : 19 No. of Claims : 15

(12) PATENT APPLICATION PUBLICATION
(21) Application No.202141021017 A
(19) INDIA
(22) Date of filing of Application :10/05/2021
(43) Publication Date : 11/06/2021

(54) Title of the invention : MOUTH MIRROR WITH RETRACTOR AND SUCTION HOLDER

(51) International classification	:A61B0017020000, A61C0017080000, A61C0005900000, A61C0017100000, A61B0013000000	(71)**Name of Applicant :** **1)VISHNU DENTAL COLLEGE** Address of Applicant :VISHNUPUR, BHIMAVARAM WEST GODAVARI, ANDHRA PRADESH INDIA 534202 Andhra Pradesh India
(31) Priority Document No	:NA	(72)**Name of Inventor :**
(32) Priority Date	:NA	**1)Dr. VILLA SAI SRUJANA**
(33) Name of priority country	:NA	**2)Dr. RAVIKANTH MANYAM**
(86) International Application No	:NA	**3)Dr. SURESH SAJJANMUNGASAVALLICHANDRASHEKAR**
Filing Date	:NA	**4)Dr.VENKATA RAMA RAJU ALLURI**
(87) International Publication No	: NA	
(61) Patent of Addition to Application Number	:NA	
Filing Date	:NA	
(62) Divisional to Application Number	:NA	
Filing Date	:NA	

(57) Abstract :
APPLICANT: VISHNU DENTAL COLLEGE TITLE: MOUTH MIRROR WITH RETRACTOR AND SUCTION HOLDER
ABSTRACT The present invention discloses a multipurpose mouth mirror with retractor and suction holder to aid in simultaneous retraction, vision, and suction thereby helping dentist to work on patients easily even without chair side assistant in simple procedures.The multipurpose mouth mirror with retractor and suction holder of the present invention comprises of a rectangular handlewith rounded edges for holding, integrated with a rectangular retractor component adapted to retract cheek and tongue, at a characterised angle of 110 degrees thereby forming a single unit characterised in slightly curved rectangular retractor component with convex side which is adapted to face towards mucosa for providing better movement of the retractor without causing any trauma and with slight tapering at end to prevent bony obstruction at posterior region along with serrations on back to attain grip in positioning a double-sided mouth mirror on centre of the retractor component at top by means of ball and socket joint through a connector in which the ball and socket employs magnet for extra holding force and prevents dislodgement of the mirror from the retraction component and inadvertent ingestion by making socket cover ¾ th of ball; in providing plurality of slots in the sockets for better sterilisation and provides space for movement of the connectorto rotate the mirror in required direction and to position the mirror towards site of operation in positioning a suction holder on bottom of the retractor component after the angle, to hold a saliva ejector.

No. of Pages : 13 No. of Claims : 4

(12) PATENT APPLICATION PUBLICATION
(21) Application No.202141021018 A
(19) INDIA
(22) Date of filing of Application :10/05/2021
(43) Publication Date : 11/06/2021

(54) Title of the invention : DIAGNOSIS PREDICTION AND GRADCAM VISUALIZATION OF DENTAL OPGS WITH DEEP LEARNING AI MODEL

(51) International classification	:C12Q0001680900, G06Q0050200000, G16H0030400000, G16H0030200000, G06N0005040000	(71)**Name of Applicant :** **1)VISHNU DENTAL COLLEGE** Address of Applicant :VISHNUPUR, BHIMAVARAM WEST GODAVARI, ANDHRA PRADESH INDIA 534202 Andhra Pradesh India
(31) Priority Document No	:NA	(72)**Name of Inventor :**
(32) Priority Date	:NA	**1)VENKATA RAJESH KUMAR PETTA**
(33) Name of priority country	:NA	**2)DR SURESH SAJJAN MC**
(86) International Application No	:NA	**3)DR RAMARAJU A V**
Filing Date	:NA	**4)ABHINAV DAYAL**
(87) International Publication No	: NA	
(61) Patent of Addition to Application Number	:NA	
Filing Date	:NA	
(62) Divisional to Application Number	:NA	
Filing Date	:NA	

(57) Abstract :
APPLICANT: VISHNU DENTAL COLLEGE TITLE: DIAGNOSIS PREDICTION AND GRADCAM VISUALIZATION OF DENTAL OPGS WITH DEEP LEARNING AI MODEL ABSTRACT The present invention discloses a method to predict diagnosis for multiple pathological conditions and GradCAM visualization of the predictions employing OPG images. The method of the present invention comprises of following sequential steps; a. receiving OPG image of a subject; b. submitting the OPG image to a characterized computing system for processing; c. obtaining from the characterized computing system prediction of positive as ˜1™ or negative as ˜0™ for each of 14 labeled pathological features and GradCAM visualization of each pathological feature predicted

No. of Pages : 15 No. of Claims : 3

(12) PATENT APPLICATION PUBLICATION
(21) Application No.202141021023 A
(19) INDIA
(22) Date of filing of Application :10/05/2021
(43) Publication Date : 11/06/2021

(54) Title of the invention : BROADBAND SINE-SQUARE PROFILED SLOT COUPLED ORTHO MODE TRANSDUCER

(51) International classification	:H01P0001161000, H01P0001060000, G02B0006122000, H01P0011000000, H01P0001163000	(71)**Name of Applicant :** **1)Indian Space Research Organisation** Address of Applicant :Department of Space, Antariksh Bhavan, New BEL Road, Bangalore 560094 Karnataka India
(31) Priority Document No	:NA	(72)**Name of Inventor :**
(32) Priority Date	:NA	**1)Jigar Pandya**
(33) Name of priority country	:NA	**2)Sagi Sravan Kumar**
(86) International Application No	:NA	**3)Milind Mahajan**
Filing Date	:NA	**4)Khagindra Kumar Sood**
(87) International Publication No	: NA	**5)Rajeev Jyoti**
(61) Patent of Addition to Application Number	:NA	**6)Rajesh Patel**
Filing Date	:NA	
(62) Divisional to Application Number	:NA	
Filing Date	:NA	

(57) Abstract :
Abstract An Ortho Mode Transducer uses a sine-square profile in coupling region and coupling slot in waveguide configuration to achieve broadband performance and comprises of a circular waveguide comprises of two circular waveguide ports at the ends (1,3) and a taper region (2), four branching waveguides (5) and four sine-square profiled coupling apertures (4). The taper region (2) of the waveguide has sine-square profiled section (2a) and comprises of a sine-square profiled slot coupling junction (2b) along the periphery of the waveguide such that a portion of the sine-square profiled coupling aperture (4) is aligned parallel to the axis of the waveguide, while the remaining part of the sine-square profiled coupling aperture (4) runs along the sine-square profiled section (2a) of the taper region (2).

No. of Pages : 22 No. of Claims : 9

(12) PATENT APPLICATION PUBLICATION
(21) Application No.202141021030 A
(19) INDIA
(22) Date of filing of Application :10/05/2021
(43) Publication Date : 11/06/2021

(54) Title of the invention : PRIVACY PRESERVING SPATIAL RANGE QUERY OVER OUTSOURCED ENCRYPTED DATA

(51) International classification	:G06F0016290000, H04W0004020000, G06F0021620000, G06F0016953700, H04L0009300000
(31) Priority Document No	:NA
(32) Priority Date	:NA
(33) Name of priority country	:NA
(86) International Application No	:NA
Filing Date	:NA
(87) International Publication No	: NA
(61) Patent of Addition to Application Number	:NA
Filing Date	:NA
(62) Divisional to Application Number	:NA
Filing Date	:NA

(71)**Name of Applicant :**
1)A.Chandra Mouli, Associate Professor/ Department of CSE, Potti Sriramulu Chalavadi Mallikarjuna Rao College of Engineering and Technology
Address of Applicant :Potti Sriramulu Chalavadi Mallikarjuna Rao College of Engineering and Technology. Kotahapeta,Vijayawada, A.P-520001 Andhra Pradesh India
2)Girish Kulkarni, Assistant professor/ Department of CSE, B V Raju Institute of Technology
3)Mohammad Manzoor Hussain, Assistant professor/Department of CSE, B V Raju Institute of Technology
4)Sahadev Maruti Shinde, Assistant professor/Department of CSE, SVERI™s College of Engineering Pandharpur
5)Sarap Manasa, Student /Department of CSE, Rishi MS Institute of Engineering & Technology for Women™s
6)Asma Begum, Assistant professor/ Department of CSE, Stanley College of Engineering and Technology for Women
(72)**Name of Inventor :**
1)A.Chandra Mouli, Associate Professor/ Department of CSE, Potti Sriramulu Chalavadi Mallikarjuna Rao College of Engineering and Technology
2)Girish Kulkarni, Assistant professor/ Department of CSE, B V Raju Institute of Technology
3)Mohammad Manzoor Hussain, Assistant professor/Department of CSE, B V Raju Institute of Technology
4)Sahadev Maruti Shinde, Assistant professor/Department of CSE, SVERI™s College of Engineering Pandharpur
5)Sarap Manasa, Student /Department of CSE, Rishi MS Institute of Engineering & Technology for Women™s
6)Asma Begum, Assistant professor/ Department of CSE, Stanley College of Engineering and Technology for Women

(57) Abstract :
Abstract The Location based services (LBS) have received considerable attention and become more popular and vital recently. However, the use of LBS also poses a potential threat to user™s location privacy. In this aiming at spatial range query, a popular LBS providing information about POIs (Points of Interest) within a given distance, we present an efficient and privacy-preserving location based query solution, called EPLQ. Specifically, to achieve privacy preserving spatial range query, we propose the first predicate only encryption scheme for inner product range, which can be used to detect whether a position is within a given circular area in a privacy-preserving way. Significant challenges still remain in the design of privacy preserving LBS, and new challenges arise particularly due to data outsourcing. In recent years, there is a growing trend of outsourcing data including LBS data because of its financial and operational benefits. Lying at the intersection of mobile computing and cloud computing, designing privacy-preserving outsourced spatial range query faces the challenges. The techniques used to realize privacy preserving query usually increase the search latency. A novel predicate-only encryption scheme for inner product range named IPRE, which allows testing whether the inner product of two vectors is within a given range without disclosing the vectors and an efficient solution for privacy-preserving spatial range query. In particular, we show that whether POI matches a spatial range query or not can be tested by examining whether the inner product of two vectors is in a given range. This can be used for more kinds of privacy-preserving queries over outsourced data. In the spatial range query discussed in this work, we consider Euclidean distance, which is widely used in spatial databases. EPLQ, we have designed a novel predicate-only encryption scheme for inner product range named IPRE and a novel privacy-preserving index tree named ss-tree.

No. of Pages : 13 No. of Claims : 4

(12) PATENT APPLICATION PUBLICATION
(21) Application No.202141021100 A
(19) INDIA
(22) Date of filing of Application :10/05/2021
(43) Publication Date : 11/06/2021

(54) Title of the invention : DESIGN AND FABRICATION OF MICROSTRIP PATCH ANTENNA FOR WIRELESS 5G APPLICATIONS

(51) International classification	:H01Q0009040000, H01Q0001380000, H01Q0009060000, H01Q0001500000, H01Q0001220000
(31) Priority Document No	:NA
(32) Priority Date	:NA
(33) Name of priority country	:NA
(86) International Application No	:NA
Filing Date	:NA
(87) International Publication No	: NA
(61) Patent of Addition to Application Number	:NA
Filing Date	:NA
(62) Divisional to Application Number	:NA
Filing Date	:NA

(71)**Name of Applicant :**
1)Dr Anandhi Meena B,Anna University
Address of Applicant :Teaching Fellow, ECE Anna University, University College of Engineering - Dindigul Tamil Nadu India 624622 Tamil Nadu India
2)S Parameswari,Kalasalingam Institute of Technology
3)Dr Prasanna Kumar Singh,Noida Institute of Engineering and Technology
4)Dr Arvind Kumar Shukla,IFTM University
5)Santosh Kumar S,Sri Venkateshwara College of Engineering
6)Dr. Shivashankar,Sri Venkateshwara College of Engineering
7)Dr.S.Sugumaran,Vishnu Institute of Technology
8)Dr.M.Kavitha,K Ramakrishnan college of technology
9)Dr Sandip D Satav,JSPM's Jayawantrao Sawant COE
10)Dr. Milind Bhalchandra Tadwalkar,Jayawantrao Sawant College of Engineering
11)Sandeep Kumar Jain,Vivekananda Global University
12)Bhojraj Agrawal,Vivekananda Global University
(72)**Name of Inventor :**
1)Dr Anandhi Meena B,Anna University
2)S Parameswari,Kalasalingam Institute of Technology
3)Dr Prasanna Kumar Singh,Noida Institute of Engineering and Technology
4)Dr Arvind Kumar Shukla,IFTM University
5)Santosh Kumar S,Sri Venkateshwara College of Engineering
6)Dr. Shivashankar,Sri Venkateshwara College of Engineering
7)Dr.S.Sugumaran,Vishnu Institute of Technology
8)Dr.M.Kavitha,K Ramakrishnan college of technology
9)Dr Sandip D Satav,JSPM's Jayawantrao Sawant COE
10)Dr. Milind Bhalchandra Tadwalkar,Jayawantrao Sawant College of Engineering
11)Sandeep Kumar Jain,Vivekananda Global University
12)Bhojraj Agrawal,Vivekananda Global University

(57) Abstract :
Advanced high speed wireless communication has attracted the researchers to focus on designing antennas which can provide optimal radiation. In the current era, 5G wireless communication has occupied the network world as its features are better compared to 4G wireless communication. In this invention we focus on designing circular microstrip patch antenna operating at a resonant frequency of 28.5 GHz with microstrip feed line such that it can be utilized for high speed 5G applications using simulation software CST Microwave Studio. We have selected RT/Duroid 5880 as the substrate material where the substrate height is of 0.65mm with a dielectric constant value of er = 2.2 and a loss tangent of 1x10-3. This design is fabricated and analyzed which is found to be very efficient in providing optimal radiation of almost 100%. This antenna design is reliable for advanced high speed networks such as 5G applications with high gain of 10 dB, good return loss of -32.86 dB and an increased bandwidth of 1.636 GHz.

No. of Pages : 12 No. of Claims : 6

(12) PATENT APPLICATION PUBLICATION
(21) Application No.202141021161 A
(19) INDIA
(22) Date of filing of Application :10/05/2021
(43) Publication Date : 11/06/2021

(54) Title of the invention : A COOLANT PIPE FOR CONCRETE ROOF

(51) International classification	:F28D0015040000, F25B0039040000, F25B0043000000, F28D0015020000, F28B0001020000
(31) Priority Document No	:NA
(32) Priority Date	:NA
(33) Name of priority country	:NA
(86) International Application No	:NA
Filing Date	:NA
(87) International Publication No	: NA
(61) Patent of Addition to Application Number	:NA
Filing Date	:NA
(62) Divisional to Application Number	:NA
Filing Date	:NA

(71)**Name of Applicant :**
1)KARUNYA INSTITUTE OF TECHNOLOGY AND SCIENCES
Address of Applicant :KARUNYA INSTITUTE OF TECHNOLOGY AND SCIENCES, KARUNYA NAGAR, COIMBATORE-641 114 Tamil Nadu India
(72)**Name of Inventor :**
1)Dr.TRIJO THARAYIL
2)Dr.LAZARUS GODSON ASIRVATHAM

(57) Abstract :
A COOLANT PIPE FOR CONCRETE ROOF A coolant pipe for concrete roof cooling relates to an elongated coolant member(1) with nanomaterial coating (2) to enhance the heat transfer capabilities and porous, permeable layer (3) to acting as a capillary wick and a working fluid(4) at a low pressure. The heat absorbed from the concrete roof is converted into vapour, which is then condensed to liquid. The liquid is returned through the capillary wick to repeat the cycle. An arrangement of coolant pipes with condenser(5) integrated in the concrete surface is capable of cooling the concrete roof and also generates hot water without electricity.

No. of Pages : 23 No. of Claims : 15

(12) PATENT APPLICATION PUBLICATION
(19) INDIA
(22) Date of filing of Application :10/05/2021
(21) Application No.202141021169 A
(43) Publication Date : 11/06/2021

(54) Title of the invention : MULTI-ROTOR HORIZONTAL WIND TURBINE

(51) International classification :F03D0009250000, F03D0001060000, F03D0001020000, F03D0013200000, B64C0027080000
(31) Priority Document No :NA
(32) Priority Date :NA
(33) Name of priority country :NA
(86) International Application No :NA
Filing Date :NA
(87) International Publication No : NA
(61) Patent of Addition to Application Number:NA
Filing Date :NA
(62) Divisional to Application Number :NA
Filing Date :NA

(71)**Name of Applicant :**
1)Dr.D.MURUGANANDAM
Address of Applicant :Plot No.28, Jagajeeva Ram Nagar, Selai Yur (Post),Chennai-600073 TamilNadu,India Tamil Nadu India
2)Dr.J.JAYAPRIYA
3)SANKARLAL R L
4)SARALADEVY R
5)RAJINI RAM G
6)Dr.K.SUBATHRA
7)J KOMATHI
8)J.THIRUNAVUKKARASU
9)J.MALATHI
10)K.VELAVAN
11)J. JAYACHANDRAN
12)PARTHIBAN MANI
13)M.ISWARYA
14)V.ESRA
15)V.SUMATHI
(72)**Name of Inventor :**
1)Dr.D.MURUGANANDAM
2)Dr.J.JAYAPRIYA
3)SANKARLAL R L
4)SARALADEVY R
5)RAJINI RAM G
6)Dr.K.SUBATHRA
7)J KOMATHI
8)J.THIRUNAVUKKARASU
9)J.MALATHI
10)K.VELAVAN
11)J. JAYACHANDRAN
12)PARTHIBAN MANI
13)M.ISWARYA
14)V.ESRA
15)V.SUMATHI

(57) Abstract :
MULTI-ROTOR HORIZONTAL WIND TURBINE Accordingly, embodiments herein disclose a multi-rotor horizontal wind turbine (100) comprising a tower (9) which holds the wind turbine (100) and supports a nacelle (7), a rotor hub (2), a plurality of blades (1), and the other wind turbine equipments. The plurality of blades (1) is designed and arranged perpendicular to translate the relative motion of the wind. When the airflows pass over the blades (1), the wind speed and pressure differential is created between the upper and lower surfaces of the blades (1) and due to the higher pressure at the lower surface, the lift force acts to the blades (1) which in turn translate the rotational motion to the blades (1). These lift propelled turbines have higher efficiency and maximum performance is achieved with the five-bladed design arrangements. Figures to be published with Abstract: Fig. 1

No. of Pages : 16 No. of Claims : 10

(12) PATENT APPLICATION PUBLICATION
(19) INDIA
(22) Date of filing of Application :11/05/2021
(21) Application No.202141021173 A
(43) Publication Date : 11/06/2021

(54) Title of the invention : BRICK-WALLED SOLAR DISTILLATION SYSTEM

(51) International classification :C02F0001140000, B01D0005000000, C02F0001040000, B01D0001000000, F24F0013220000
(31) Priority Document No :NA
(32) Priority Date :NA
(33) Name of priority country :NA
(86) International Application No :NA
Filing Date :NA
(87) International Publication No : NA
(61) Patent of Addition to Application Number :NA
Filing Date :NA
(62) Divisional to Application Number :NA
Filing Date :NA

(71)**Name of Applicant :**
1)Dr.S.Joe Patrick Gnanaraj
Address of Applicant :Associate Professor Department of Mechanical Engineering Francis Xavier Engineering College Tirunelveli Tamil Nadu India
2)Dr.Zeenathul Farida Abdul Gani, Francis Xavier engineering college
3)Dr.S.Amal Bosco Jude, University VOC College of Engineering
4)S.Rajakumar, University VOC College of Engineering
5)N.Sankareswaran, Anna University Regional Campus
6)Dr. V.Kannan, Thoothukudi
(72)**Name of Inventor :**
1)Dr S Ramachandran, CMR Institute of Technology
2)Dr.V.Kannan, Thoothukudi
3)S. Rajakumar, University VOC College of Engineering
4)Dr.S.Amal Bosco Jude, University VOC College of Engineering
5)N.Sankareswaran, Anna University Regional Campus
6)Dr.S.Joe Patrick Gnanaraj, FXEC

(57) Abstract :
The present invention is a solar distillation system fabricated by means of bricks. The entire still is divided into compartments (2) as per the user need. Each compartment(2) has a provision for storing the distilled water(3) collected by condensation process. The collected water(3) in the compartments is a pure condensed water which are ready for drinking. There is a provision on each side to collect the distilled water (3) without usage. The brick-walled solar still rests on a stand(4). The hollow bricks used for the construction provides an environment for collecting the distillate. This provides a perfect alternate to produce purified water in places of water scarcity.

No. of Pages : 15 No. of Claims : 5

(12) PATENT APPLICATION PUBLICATION
(21) Application No.202141021184 A
(19) INDIA
(22) Date of filing of Application :11/05/2021
(43) Publication Date : 11/06/2021

(54) Title of the invention : SMART GARBAGE MONITORING SYSTEM USING SENSORS WITH RFID OVER INTERNET OF THINGS

(51) International classification	:B65F0001140000, B65F0001000000, G06K0017000000, B65F0001160000, G08B0021220000	(71)**Name of Applicant :**
(31) Priority Document No	:NA	
(32) Priority Date	:NA	
(33) Name of priority country	:NA	
(86) International Application No	:NA	
Filing Date	:NA	
(87) International Publication No	: NA	
(61) Patent of Addition to Application Number	:NA	
Filing Date	:NA	
(62) Divisional to Application Number	:NA	
Filing Date	:NA	

1)Dr.M.NARAYANAN
Address of Applicant :Dr.M.NARAYANAN S/O MADESHAN, No: 1/237, Kumbarahalli, P.Pallipatti Post, Pappireddipatty Taluk, Dharmapuri District, Tamil Nadu, Pin: 635 301 Tamil Nadu India
2)Dr. P.Santosh Kumar Patra
3)Dr.T.POONGOTHAI
4)Dr. N. SATHEESH
5)Dr. R SANTHOSHKUMAR
6)Dr. B.RAJALINGAM
(72)**Name of Inventor :**
1)Dr.M.NARAYANAN

(57) Abstract :
7. ABSTRACT A smart garbage monitoring system (100) using Sensors with RFID over internet of things is disclosed. The proposed technology is related to a new garbage collecting way to dispose the waste by using the latest technology. In this technology few sensors are incorporated to the smart bin (11) like photoelectric sensor (16) that detect the clear representation objects, weight sensor (20) that calculate the percentage of the garbage dumped inside the bin (11) and the IR sensor (14). When a person drops the garbage into the bin (11) the Radio frequency identication (RFID) CARD reader (18) reads all the information about that particular person (12) and send a message to him that the materials dropped inside the bin (11) and an appreciation message for using the bin (11). The IR sensor (14) sends the updated information to the concerned authorities (10) who are responsible for that particular area. So, the concerned authorities (12) continuously receive the messages until the bin (11) is squashed and each bin (11) is assigned with a unique ID. With the help of these sensors™ authorities (10) identifies the information about the bin (11) up to date by the unique ID of the bin (11). If the bin (11) is overflowing, the concerned authorities (10) can easily identify the bin (100) location and squash it as early as possible. So, people can again use it. Figure related to abstract is Fig.1.

No. of Pages : 18 No. of Claims : 9

(12) PATENT APPLICATION PUBLICATION
(21) Application No.202141021200 A
(19) INDIA
(22) Date of filing of Application :11/05/2021
(43) Publication Date : 11/06/2021

(54) Title of the invention : SYSTEM FOR MANAGEMENT OF VENTILATORS FOR COVID PATIENTS IN HOSPITAL USING BLOCK CHAIN

(51) International classification	:G16H0040200000, H04W0084180000, B01F0011000000, G06Q0050300000, C07H0001060000
(31) Priority Document No	:NA
(32) Priority Date	:NA
(33) Name of priority country	:NA
(86) International Application No	:NA
Filing Date	:NA
(87) International Publication No	: NA
(61) Patent of Addition to Application Number	:NA
Filing Date	:NA
(62) Divisional to Application Number	:NA
Filing Date	:NA

(71)**Name of Applicant :**
1)Dr. Ananth Prabhu G
Address of Applicant :Professor, Department of Computer Science and Engineering, Sahyadri College of Engineering and Management, Mangalore, Karnataka, India Karnataka India
2)Dr.Karuna Pandit
3)Dr. Mustafa Basthikodi
4)Dr. Nethravathi P.S
5)Dr Manjula Sanjay Koti
6)Dr. Anush Bekal
7)Shilpashree S
8)Rohan Don Salins
9)Sonia V. Soans
10)Vaishak N L
(72)**Name of Inventor :**
1)Dr. Ananth Prabhu G
2)Dr.Karuna Pandit
3)Dr. Mustafa Basthikodi
4)Dr. Nethravathi P.S
5)Dr Manjula Sanjay Koti
6)Dr. Anush Bekal
7)Shilpashree S
8)Rohan Don Salins
9)Sonia V. Soans
10)Vaishak N L

(57) Abstract :
The present invention relates to system for management of ventilators for covid patients in hospital using block chain. The objective of the present invention is to solve the problems in the prior art technologies of hospital resource management.

No. of Pages : 25 No. of Claims : 4

(12) PATENT APPLICATION PUBLICATION
(21) Application No.202141021252 A
(19) INDIA
(22) Date of filing of Application :11/05/2021
(43) Publication Date : 11/06/2021

(54) Title of the invention : MACHINE LEARNING BASED DATA MINING FOR ANALYSIS OF STUDENTS PROFILE IN UNIVERSITIES

(51) International classification	:G06Q0050200000, G06K0009620000, G06Q0010060000, H04W0024040000, G01R0027280000
(31) Priority Document No	:NA
(32) Priority Date	:NA
(33) Name of priority country	:NA
(86) International Application No	:NA
Filing Date	:NA
(87) International Publication No	: NA
(61) Patent of Addition to Application Number	:NA
Filing Date	:NA
(62) Divisional to Application Number	:NA
Filing Date	:NA

(71)**Name of Applicant :**
1)Dr. T G Basavaraju,Government SKSJ Technological Institute
Address of Applicant :Professor, Government SKSJ Technological Institute - Bangalore Karnataka India Karnataka India
2)Vasanthakumara M,Government SKSJ Technological Institute
3)Dr. Surekha K B,BMS Institute of Technology
4)Dr. Nirmala Hiremani,Visvesvaraya Technological University
5)Dr.Adarsha Sagar H V ,Presidency University
(72)**Name of Inventor :**
1)Dr. T G Basavaraju,Government SKSJ Technological Institute
2)Vasanthakumara M,Government SKSJ Technological Institute
3)Dr. Surekha K B,BMS Institute of Technology
4)Dr. Nirmala Hiremani,Visvesvaraya Technological University
5)Dr.Adarsha Sagar H V ,Presidency University

(57) Abstract :
Students are the strength of any educational institution whose quality is measured by the process of official recognition termed as Accreditation. The measurement of quality focuses on strength of students hence educational institutions give more importance to prevent drop out of students as high dropping rate of students create bad impact on the institutions resulting in low grade accreditation and finally ends in bad reputation. This invention involves data mining technique for analyzing the student educational data which is utilized by the classification method for predicting the student drop out in undergraduate level at XYZ University. Prediction of student drop out is done based on the raw student academics data enrolled in the university for a particular academic year. Imbalanced raw data is handled through preprocessing where in our invention imbalance dataset is handled by synthetic minority oversampling technique. Followed by which student drop out is predicted using random forest algorithm thereby providing accurate results of 93.5 %. These results can be utilized for reducing the drop out level of students by identification of related potential factors.

No. of Pages : 11 No. of Claims : 6

(12) PATENT APPLICATION PUBLICATION
(21) Application No.202141021273 A
(19) INDIA
(22) Date of filing of Application :11/05/2021
(43) Publication Date : 11/06/2021

(54) Title of the invention : SMART ENTRY POINTS AT PUBLIC PLACES

(51) International classification	:G08B0013240000, G01J0005000000, G10L0025510000, G06N0020000000, G07F0019000000
(31) Priority Document No	:NA
(32) Priority Date	:NA
(33) Name of priority country	:NA
(86) International Application No	:NA
Filing Date	:NA
(87) International Publication No	: NA
(61) Patent of Addition to Application Number	:NA
Filing Date	:NA
(62) Divisional to Application Number	:NA
Filing Date	:NA

(71)**Name of Applicant :**
1)Dr. Supriya V G
Address of Applicant :Department of ECE, SIR M Visvesvaraya Institute of Technology affiliated to Visvesvaraya Technological University Belagavi , Hunasamaranahalli, Yelahanka, off International airport road, Bangalore-562157 Email Id : drsupriya_ec@sirmvit.edu Phone : 9480690830 Karnataka India
2)Dr. Rachappa Jopate
3)Dr. DivyaJyothi M.G.
4)Supritha N
5)Mr. Anoop N prasad
6)Dr.Chethana Sridhar
(72)**Name of Inventor :**
1)Dr. Supriya V G
2)Dr. Rachappa Jopate
3)Dr. DivyaJyothi M.G.
4)Supritha N
5)Mr. Anoop N prasad
6)Dr.Chethana Sridhar

(57) Abstract :
The invention discloses a novel mechanism wherein entry is authorised to people who are wearing masks properly, who have sanitised their hands, have temperature within acceptable limits and are not having uneasiness. The aforesaid conditions are monitored using various sensors and using machine learning the surveillance is done without any need of personnel. In case any discrepancy is observed alerting system will inform the personnel to restrict the entry of the airborne disease carrier.

No. of Pages : 9 No. of Claims : 1

(12) PATENT APPLICATION PUBLICATION
(19) INDIA
(22) Date of filing of Application :11/05/2021

(21) Application No.202141021276 A
(43) Publication Date : 11/06/2021

(54) Title of the invention : A SMART APPLICATION FOR DELIVERING MEDICINE AT HOME USING E-PRESCRIPTION

(51) International classification	:G06Q0050220000, G16H0010600000, G16H0050200000, G16H0040670000, G16H0010650000
(31) Priority Document No	:NA
(32) Priority Date	:NA
(33) Name of priority country	:NA
(86) International Application No	:NA
Filing Date	:NA
(87) International Publication No	: NA
(61) Patent of Addition to Application Number	:NA
Filing Date	:NA
(62) Divisional to Application Number	:NA
Filing Date	:NA

(71)**Name of Applicant :**
1)Mrs. M. Prameela
Address of Applicant :Assistant Professor, Freshman Engineering Department, Prasad V. Potluri Siddhartha Institute of Technology, Vijayawada-520007. Andhra Pradesh India
2)Shaik Mohammed Rafi
3)Mr. Shivcharan singh Gandhar
4)Mr. Shafqat Nabi Mughal
5)Rukhsana Thaker
6)Dr. Shanmugananth.
7)ANWESH PRADHAN
8)Kakirala Durga Bhavani
9)Dr.J.Muthukumaran
10)Dr. Harikumar Pallathadka
11)Mr. Sankararao Majji
12)Kaviyaraj R
(72)**Name of Inventor :**
1)Mrs. M. Prameela
2)Shaik Mohammed Rafi
3)Mr. Shivcharan singh Gandhar
4)Mr. Shafqat Nabi Mughal
5)Rukhsana Thaker
6)Dr. Shanmugananth.
7)ANWESH PRADHAN
8)Kakirala Durga Bhavani
9)Dr.J.Muthukumaran
10)Dr. Harikumar Pallathadka
11)Mr. Sankararao Majji
12)Kaviyaraj R

(57) Abstract :
The purpose of this research was to create an E-prescribing application for patients based on the Smartphone. The application is expected to provide an overview of medication that the patient is given during hospitalization and allow the patient to interact with the doctor to receive prescriptions for the profuse syndrome. Online medical system is online web portal where doctors, hospital do the task of providing online treatment to patients avoid crowding. The treatment can be done by selecting symptoms or pair of symptoms age wise. After payment done, then by selecting appropriate nearby medical store patients get home delivery of medicine. The service of this portal can be accessible on mobile by installing application. The service can be accessible on both PCs, laptop and mobile.

No. of Pages : 6 No. of Claims : 5

(12) PATENT APPLICATION PUBLICATION
(19) INDIA
(22) Date of filing of Application :11/05/2021
(21) Application No.202141021280 A
(43) Publication Date : 11/06/2021

(54) Title of the invention : A NOVEL FUZZY DECISION FOR BETTER HETEROGENEOUS MANET

(51) International classification	:G08C0017020000, H04L0012240000, H04B0007060000, H04W0012040000, H04B0010112000
(31) Priority Document No	:NA
(32) Priority Date	:NA
(33) Name of priority country	:NA
(86) International Application No	:NA
Filing Date	:NA
(87) International Publication No	: NA
(61) Patent of Addition to Application Number	:NA
Filing Date	:NA
(62) Divisional to Application Number	:NA
Filing Date	:NA

(71)**Name of Applicant :**
1)Dr. B. S. Kiruthika Devi, Assistant Professor
Address of Applicant :Department of Information Technology, Sri Sairam Engineering College, Chennai Tamil Nadu India
2)R Logeshwari, Assistant Professor
3)T.Malathi, Assistant Professor
4)Dr Sivaramakrishnan S, Assistant professor
5)Dr G Suseela, Assistant professor
6)Prathima Devadass, Research Scholar
7)V. Kiruthiga, Research Scholar
8)Venkatesan Pillai, Professor
9)Praveena Rachel Kamala S, Assistant Professor
10)Dr. B. Prabhu kavin, Assistant Professor
(72)**Name of Inventor :**
1)Dr. B. S. Kiruthika Devi, Assistant Professor
2)R Logeshwari, Assistant Professor
3)T.Malathi, Assistant Professor
4)Dr Sivaramakrishnan S, Assistant professor
5)Dr G Suseela, Assistant professor
6)Prathima Devadass, Research Scholar
7)V. Kiruthiga, Research Scholar
8)Venkatesan Pillai, Professor
9)Praveena Rachel Kamala S, Assistant Professor
10)Dr. B. Prabhu kavin, Assistant Professor

(57) Abstract :
ABSTRACT Providing secure and low-cost wireless connectivity is a difficult challenge for long-term economic growth. Established wireless channel capacity is being strained by the demand for wireless data services. By adding spatial diversity, this demand can be met. Multiple antenna is one of the most promising methods for dealing with channel fading, and it necessitates the use of multiple antennas at both the transmitter and receiver ends. The fuzzy-based method has been found to be useful for network communication for surveillance with a large number of nodes in communication range. This network is fairly resistant to node configuration changes. Since mesh topology is used to build the network, all of the nodes in the proposed network have some kind of relationship with one another, resulting in network reliability. Because of the relationship between nodes, this device works reliably even in environments where the radio connection quality is low. The proposed method outperforms previous methods in terms of throughput and low end-to-end latency, according to the results of the research.

No. of Pages : 11 No. of Claims : 6

(12) PATENT APPLICATION PUBLICATION
(19) INDIA
(22) Date of filing of Application :11/05/2021
(21) Application No.202141021300 A
(43) Publication Date : 11/06/2021

(54) Title of the invention : SMART MULTIMODE ELECTRIC CYCLE

(51) International classification	:H02J0003380000, H01M0010052500, H02J0007350000, B60L0008000000, H02S0020000000
(31) Priority Document No	:NA
(32) Priority Date	:NA
(33) Name of priority country	:NA
(86) International Application No	:NA
Filing Date	:NA
(87) International Publication No	: NA
(61) Patent of Addition to Application Number	:NA
Filing Date	:NA
(62) Divisional to Application Number	:NA
Filing Date	:NA

(71)**Name of Applicant :**
1)Dr. D. KARUNKUZHALI
Address of Applicant :Professor, Department of Information Technology, Panimalar Engineering College, Poonamallee, Chennai 600 123, Tamil Nadu, India Tamil Nadu India
2)Dr. S. BRINDHA
3)Dr. R. VENKATESH
4)Dr. T. PONNARASI
5)Dr. R. BHARGAVA RAMA GOWD
6)K. E. LAKSHMI PRABHA
7)Dr. R. AHILA
8)Dr. A. KAVITHA
9)V. SUBASHINI
10)Dr. A. DANIEL
(72)**Name of Inventor :**
1)Dr. D. KARUNKUZHALI
2)Dr. S. BRINDHA
3)Dr. R. VENKATESH
4)Dr. T. PONNARASI
5)Dr. R. BHARGAVA RAMA GOWD
6)K. E. LAKSHMI PRABHA
7)Dr. R. AHILA
8)Dr. A. KAVITHA
9)V. SUBASHINI
10)Dr. A. DANIEL

(57) Abstract :
ABSTRACT Smart Multimode Electric Cycle This invention is related to a Solar electric cycle to operate by renewable power as the fuel. As renewable power is at no cost, the running cost is zero. In addition, the vehicle does not have emission value. It essentially functions on three modes: Solar mode, Wall plug-in charge and manual pedal mechanism. In solar mode the electricity is stored in lithium ion battery with the help of photovoltaic polycrystalline solar panels. The rider can also opt for normal pedal system in absence of electricity. The operation of solar electric cycle is smooth and silent

No. of Pages : 11 No. of Claims : 3

(12) PATENT APPLICATION PUBLICATION
(21) Application No.202141021319 A
(19) INDIA
(22) Date of filing of Application :11/05/2021
(43) Publication Date : 11/06/2021

(54) Title of the invention : COST EFFECTIVE CONVERGENCE MECHANISM FOR SELF-REGULATING MOLDING MACHINE USING IOT.

(51) International classification	:H04W0004700000, H04L0029080000, A61B0005010000, B29C0045760000, G05B0019180000	(71)**Name of Applicant :** **1)Dr.I.Daniel Lawrence** Address of Applicant :Assistant professor, Department of Mechanical Engineering, Loyola Institute of Technology, Chennai - 600123. Tamil Nadu India
(31) Priority Document No	:NA	(72)**Name of Inventor :**
(32) Priority Date	:NA	**1)Dr.I.Daniel Lawrence**
(33) Name of priority country	:NA	**2)Dr.M.Thirunavukkarasu**
(86) International Application No	:NA	**3)Dr. B. Kishore**
Filing Date	:NA	**4)Mr. C. Sathish**
(87) International Publication No	: NA	**5)Dr.M.selvakumar**
(61) Patent of Addition to Application Number	:NA	**6)Mr. T.Ramkumar**
Filing Date	:NA	
(62) Divisional to Application Number	:NA	
Filing Date	:NA	

(57) Abstract :
Advancement in Internet of Things (IoT) based real time conveyance has become the modernization technology among the researcher due to reliable and progressive standards. Commercial convergence mechanism is a key to develop self-regulating molding machine, involving a vast range of information and communication technologies incorporating machinery, microcontroller, actuators and sensors at different levels. Furthermore, smart device contributes significance for processing, interacting and communicating towards machine-to-machine using wireless network and Radio Frequency Identification (RFID) technologies. A novel IoT based interface mechanism for self-regulating molding machine attempts to facilitate software based Graphical User Interface (GUI) integrated with distinct sensors, actuators, microcontroller, memory and electronics motors. Subsequently, the sensed information is associated to the cloud platform to analyze the operation functionalities and periodically store data of molding machine in real time aspects.

No. of Pages : 10 No. of Claims : 4

(12) PATENT APPLICATION PUBLICATION
(21) Application No.202141021356 A
(19) INDIA
(22) Date of filing of Application :11/05/2021
(43) Publication Date : 11/06/2021

(54) Title of the invention : A SMART MOBILE APP FOR FRUIT COUNTING AND YIELD ESTIMATION IN FARM USING IMAGE PROCESSING TECHNIQUE

(51) International classification	:G06K0009620000, G06K0009000000, G06N0003040000, G06T0007110000, G06T0007120000
(31) Priority Document No	:NA
(32) Priority Date	:NA
(33) Name of priority country	:NA
(86) International Application No	:NA
Filing Date	:NA
(87) International Publication No	: NA
(61) Patent of Addition to Application Number	:NA
Filing Date	:NA
(62) Divisional to Application Number	:NA
Filing Date	:NA

(71)**Name of Applicant :**
1)Dr. J.M. GNANASEKAR
Address of Applicant :Professor, Department of Computer Science and Engineering, Sri Venkateswara College of Engineering, Post Box No: 3, Pennalur, Sriperumbudur - 602 117, Kancheepuram Dist, TamilNadu. Ph: 9444508360 E-Mail: jmg_sekar@yahoo.com Tamil Nadu India
2)Mr. S. PRABU
3)Mrs. K. PARKAVI
4)Mr. S. PALPANDI
5)Mr. GOWTHAM CHINNARAJU
(72)**Name of Inventor :**
1)Dr. J.M. GNANASEKAR
2)Mr. S. PRABU
3)Mrs. K. PARKAVI
4)Mr. S. PALPANDI
5)Mr. GOWTHAM CHINNARAJU

(57) Abstract :
ABSTRACT OF THE INVENTION A Smart Mobile Application based yield estimation and fruit counting consists of three separate stages internally and they are Image Segmentation for segmenting the object of interest fruits alone, Classification using Support Vector Machine (SVM) classifier for identifying the fruit from entire background image and finally it comes to total yield estimation and automatic fruit counting cumulatively. The captured raw image from the fruit farm is initially processed and converted into its equivalent binary representation after the removal of noise or unwanted pixel values from the image. Now, Image Segmentation is done based on region of interest and performs the feature extraction which in turn generates a pattern of objects. Then, image classification is performed with the help of Support Vector Machine - SVM classifier which involves Normalization, Selecting Activation function, Optimizing parameters after cross validation, Training the model, Testing the model and Evaluate the model performance. After this, training and testing phase leads to train the network model and test them to validate against the final outcome versus backend training dataset images which are used to train the network model. It is then proceeded to predict the object i.e. fruits from the captured image taken in farm and thus estimates the total predicted yield and counts the total number of fruits available in the farm cumulatively. In this way, a smart Mobile App for Fruit counting and Yield estimation in farm helps the farmer to use the Agricultural farm resources effectively and in turn improves the overall farm yield.

No. of Pages : 11 No. of Claims : 5

(12) PATENT APPLICATION PUBLICATION
(21) Application No.202141021385 A
(19) INDIA
(22) Date of filing of Application :12/05/2021
(43) Publication Date : 11/06/2021

(54) Title of the invention : METHOD FOR QUERY EXPANSION USING WORD SENSE DISAMBIGUATION ON TELUGU TEXT CORPUS FOR INFORMATION RETRIEVAL PROCESS

(51) International classification	:G06F0016330000, G06F0040300000, G06F0016310000, G06F0016332000, G06F0016953500	(71)**Name of Applicant :**
(31) Priority Document No	:NA	
(32) Priority Date	:NA	
(33) Name of priority country	:NA	
(86) International Application No	:NA	
Filing Date	:NA	
(87) International Publication No	: NA	
(61) Patent of Addition to Application Number	:NA	
Filing Date	:NA	
(62) Divisional to Application Number	:NA	
Filing Date	:NA	

1)Dr. Neeraja Koppula
Address of Applicant :Faculty, Department of Information Technology, MLR Institute of Technology, Dundigal, Hyderabad-500043, Telangana, India Telangana India
2)Dr. B. Padmaja Rani
3)Dr. K. Srinivas Rao
(72)**Name of Inventor :**
1)Dr. Neeraja Koppula
2)Dr. B. Padmaja Rani
3)Dr. K. Srinivas Rao

(57) Abstract :
METHOD FOR QUERY EXPANSION USING WORD SENSE DISAMBIGUATION ON TELUGU TEXT CORPUS FOR INFORMATION RETRIEVAL PROCESS The availability of digital documents in the Indian languages is increased due to the availability of high speed internet facility. To access the information from digital documents, effective and efficient methods are required. The words in the documents play a vital role in all prior methods, since sentences and documents depends on words. To improve the accuracy of the information retrieval system, query expansion techniques are used in all Indian languages. Polysemy word Sense identification is important for Indian languages to improve the information retrieval results where different query expansion methods are applied. In our invention, query expansion methodology was proposed for disambiguating the polysemy word in Telugu language using WSD methods and semantic network. In information retrieval system, to improve search results, the users query is enriched with the senses of the polysemous word. For the given input query term searching the senses of the polysemous (disambiguated) word will expands the query automatically. In this context, word and sense relationships must be taken into consideration to reformulate root query in regional Telugu language. The semantic network attempts to capture the relationships between words and senses. The obtained sense is replaced in the query reformulation and this reformulated query is used for information retrieval process.

No. of Pages : 11 No. of Claims : 5

(12) PATENT APPLICATION PUBLICATION
(21) Application No.202141021389 A
(19) INDIA
(22) Date of filing of Application :12/05/2021
(43) Publication Date : 11/06/2021

(54) Title of the invention : PERFORMANCE ENHANCEMENT IN MIMO-OFDM SYSTEM USING FUZZY INFERENCE ARTIFICIAL NEURAL NETWORK

(51) International classification	:H04L0027260000, H04L0025030000, H04W0052260000, H04L0027340000, H04L0001040000
(31) Priority Document No	:NA
(32) Priority Date	:NA
(33) Name of priority country	:NA
(86) International Application No	:NA
Filing Date	:NA
(87) International Publication No	: NA
(61) Patent of Addition to Application Number	:NA
Filing Date	:NA
(62) Divisional to Application Number	:NA
Filing Date	:NA

(71)**Name of Applicant :**
1)Dr.P.V.Naganjaneyulu
Address of Applicant :Professor of ECE and Principal, Sri Mittapalli College of Engineering, Thummalapalem, Guntur District, Andhra Pradesh, India. Pin Code: 522019 Andhra Pradesh India
2)Dr.P.Nageswara Rao
3)Mrs.N.Renuka
4)Mr.Kiran Mannem
5)Mr.K.Jamal
6)Dr.Koteswara Rao Seelam
7)Mr.V.T Venkateswarlu
(72)**Name of Inventor :**
1)Dr.P.V.Naganjaneyulu
2)Dr.P.Nageswara Rao
3)Mrs.N.Renuka
4)Mr.Kiran Mannem
5)Mr.K.Jamal
6)Dr.Koteswara Rao Seelam
7)Mr.V.T Venkateswarlu

(57) Abstract :
The Wireless Word today transmitting Data in the form of Text, Images and Videos over a long distance through a Digital Communication System. This Digital Communication System uses single carrier for transmitting the Data over a long distance leads to Lower Data Transmission Rate, Lower Spectral Efficiency and Lower Reliability. The Multi-Input, Multi-Output-Orthogonal Frequency Division Multiplexing (MIMO-OFDM) is the present best suitable wireless interfacing system for 4G or 5G Wireless Communications. This MIMO-OFDM uses multiple carriers, can offers higher Data Transmission Rate, Spectral Efficiency, and Reliability. The PAPR which is the ratio of peak power to the average power of a signal and significant parameter to be considering for effective utilization of MIMO-OFDM in Wireless Communications, the higher value of PAPR degrades the transmitted signal. The present invention disclosed herein is Performance Enhancement in MIMO-OFDM System using Fuzzy Inference Artificial Neural Network comprising of: Data Symbols (201); Modulation (202); Inverse FFT (203); Fuzzy Inference Artificial Neural Network (204); Encoder (205); Fading (206); Noise (207); Decoder (208); Equalization (209); Demodulation (210); and Re-Generated Data Symbols (211); used to reduce higher PAPR in MIMO-OFDM System by the use of Fuzzy Inference Artificial Neural Network. The present invention disclosed here shows the superior performance in reducing the PAPR and the performance parameters estimated are PAPR of 6.8dB, and SNR of 7.82dB.

No. of Pages : 14 No. of Claims : 9

(12) PATENT APPLICATION PUBLICATION
(21) Application No.202141021391 A
(19) INDIA
(22) Date of filing of Application :12/05/2021
(43) Publication Date : 11/06/2021

(54) Title of the invention : IOT UAV SYSTEM FOR EFFICIENT FIRE DETECTION IN UNMANNED FOREST USING WIRELESS SENSOR NETWORKS AND IMAGE PROCESSING

(51) International classification	:A61B0005000000, G08B0013193000, H04N0005232000, G01V0001220000, H04W0088080000
(31) Priority Document No	:NA
(32) Priority Date	:NA
(33) Name of priority country	:NA
(86) International Application No	:NA
Filing Date	:NA
(87) International Publication No	: NA
(61) Patent of Addition to Application Number	:NA
Filing Date	:NA
(62) Divisional to Application Number	:NA
Filing Date	:NA

(71)**Name of Applicant :**
1)Dr.V.Arulkumar (Assistant Professor, Sri Krishna College of Engineering and Technology)
Address of Applicant :Assistant Professor, Computer Science and Business Systems (TCS), Sri Krishna College of Engineering and Technology, Coimbatore. Tamil Nadu India
2)Dr. V. S. Manjula, College of Informatics, Wollo University
3)Mr. A. Ranjith, St. Joseph University in Tanzania
4)Mr.S.Arockia Jayadhas, Joseph University in Tanzania
5)Dr. Shashi Raj K, Dayananda Sagar College of Engineering
6)Dr. Prakash Kuravatti, ATME College of Engineering,
(72)**Name of Inventor :**
1)Dr.V.Arulkumar (Assistant Professor, Sri Krishna College of Engineering and Technology)
2)Dr. V. S. Manjula, College of Informatics, Wollo University
3)Mr. A. Ranjith, St. Joseph University in Tanzania
4)Mr.S.Arockia Jayadhas, Joseph University in Tanzania
5)Dr. Shashi Raj K, Dayananda Sagar College of Engineering
6)Dr. Prakash Kuravatti, ATME College of Engineering,

(57) Abstract :
Advances in sensors make VSN the most suitable technique for detecting forest fires. The sensor provides more precise data on this region at all times. Its main advantages are a scalable network and coverage of various sizes. The sensor is able to observe the physical parameters that surround it. We can connect to VSN device and add more sensors to collect different parameters. The sensors can be placed anywhere in the most common places and there is no need to build a tower. The system includes sensor nodes, detection zones and base stations. Environmental parameters are periodically monitored using sensors placed in areas of interest. Each detected data is sent from one node to another node and then directed to the base station. The base station analyzes the monitored decision-making information and provides the data to various users for analysis around the world via the Internet.

No. of Pages : 6 No. of Claims : 6

(12) PATENT APPLICATION PUBLICATION
(21) Application No.202141021487 A
(19) INDIA
(22) Date of filing of Application :12/05/2021
(43) Publication Date : 11/06/2021

(54) Title of the invention : A PROCESS OF RECOVERING SERICIN FROM SILK DEGUMMING WASTE SOLUTION USING AN ELECTROCHEMICAL CELL

(51) International classification	:D01C0003020000, A61K0008640000, H01M0010440000, C25C0007000000, C01B0003500000	(71)**Name of Applicant :** **1)Nanosentrix Private Limited** Address of Applicant :Jyothy Institute of Technology Campus Thataguni, Off Kanakapura Road Bengaluru -560082 Karnataka Karnataka India
(31) Priority Document No	:NA	(72)**Name of Inventor :**
(32) Priority Date	:NA	**1)Dr. Narendra Reddy**
(33) Name of priority country	:NA	**2)Dr. Uma Ullas Pradhan**
(86) International Application No	:NA	
Filing Date	:NA	
(87) International Publication No	: NA	
(61) Patent of Addition to Application Number	:NA	
Filing Date	:NA	
(62) Divisional to Application Number	:NA	
Filing Date	:NA	

(57) Abstract :
A PROCESS OF RECOVERING SERICIN FROM SILK DEGUMMING WASTE SOLUTION USING AN ELECTROCHEMICAL CELL The invention discloses a process of recovering sericin from silk degumming waste solution using an electrochemical cell. The electrochemical cell comprises at least two electrodes, electrochemical cells is operated using DC or AC, and maintained at a particular pH, wherein the electrochemical cell™s recovery time of sericin is between 15 minutes and 24 hours. The process is highly efficient, low cost and industrially scalable. Further, the invention provides an electrochemical sericin recovery system (100) for recovering sericin from silk degumming waste solution.

No. of Pages : 20 No. of Claims : 8

(12) PATENT APPLICATION PUBLICATION
(21) Application No.202141021547 A
(19) INDIA
(22) Date of filing of Application :12/05/2021
(43) Publication Date : 11/06/2021

(54) Title of the invention : ENSURING NUTRITIONAL VALUE OF FOOD PRODUCTS FROM MANUFACTURERS TO CONSUMERS USING WIRELESS SENSOR NETWORKS AND BLOCKCHAIN TECHNOLOGY

(51) International classification	:B65D0043020000, G09B0019000000, G06Q0030000000, G09B0005020000, A23L0003350800
(31) Priority Document No	:NA
(32) Priority Date	:NA
(33) Name of priority country	:NA
(86) International Application No	:NA
Filing Date	:NA
(87) International Publication No	: NA
(61) Patent of Addition to Application Number	:NA
Filing Date	:NA
(62) Divisional to Application Number	:NA
Filing Date	:NA

(71)**Name of Applicant :**
1)Anitha Rajakumari P
Address of Applicant :Research Scholar, SRM Institute of Science and Technology, Delhi-NCR Campus, Ghaziabad-201204, Uttar Pradesh, India Uttar Pradesh India
2)Dr. Pritee Parwekar
3)Pratyusa Mukherjee
4)Sanjaya Kumar Sarangi
5)Rasmita Lenka
6)Swarnalata Rath
7)Ms. Sana Tak
8)Riya Saini
9)Ritambhara
10)Dr. Nazrul Haq
11)Mr. Dhiraj Kapila
12)Dr.S.Balamurugan
(72)**Name of Inventor :**
1)Anitha Rajakumari P
2)Dr. Pritee Parwekar
3)Pratyusa Mukherjee
4)Sanjaya Kumar Sarangi
5)Rasmita Lenka
6)Swarnalata Rath
7)Ms. Sana Tak
8)Riya Saini
9)Ritambhara
10)Dr. Nazrul Haq
11)Mr. Dhiraj Kapila
12)Dr.S.Balamurugan

(57) Abstract :
Ensuring Nutritional Value of Food Products from Manufacturers to Consumers Using Wireless Sensor Networks and Blockchain Technology (NVFPMC) helps the consumer to make use of the NVFPMC to ensuring the nutritional value of food products from manufacturers to consumers automatically using bar-code and blockchain technology. Smart farming is used to cultivate food items efficiently with full nutrition values. The food manufacturing factory helps to process the food items into food products without reducing the nutrition values. Then it measures the nutrition values of each food product and labeled them as a bar-code value. Then the food products are kept maintaining in the food storage unit by retailers. Then it will be transferred to supermarkets through appropriate logistics without degrading the nutrition values of food products. The end-user will purchase the food products in the supermarket by ensuring the nutrition values. If any deviation in the nutrition values, then the user may decide to purchase it or not as well as make a complaint about the products. The NVFPMC control unit helps to monitoring and managing the successful functioning of the whole NVFPMC system. By using this NVFPMC, the consumer to make use of the NVFPMC to ensuring the nutritional value of food products from manufacturers to consumers automatically using bar-code and blockchain technology.

No. of Pages : 16 No. of Claims : 3

(12) PATENT APPLICATION PUBLICATION
(21) Application No.202141021548 A
(19) INDIA
(22) Date of filing of Application :12/05/2021
(43) Publication Date : 11/06/2021

(54) Title of the invention : IOT BASED ELDERLY PEOPLE ACTIVITY MONITORING AND DETECTING UNUSUAL ACTIVITY IN HOME

(51) International classification	:A61B0005000000, A61B0005020500, G06Q0050220000, H04L0029080000, A61B0005021000
(31) Priority Document No	:NA
(32) Priority Date	:NA
(33) Name of priority country	:NA
(86) International Application No	:NA
Filing Date	:NA
(87) International Publication No	: NA
(61) Patent of Addition to Application Number	:NA
Filing Date	:NA
(62) Divisional to Application Number	:NA
Filing Date	:NA

(71)**Name of Applicant :**
1)Dr. S. JAGAN
Address of Applicant :Associate Professor, Department of Computer Science and Engineering, Vel Tech Rangarajan Dr.Sagunthala R&D Institute of Science and Technology, No.42, Avadi-Vel Tech Road, Poonamallee - Avadi High Road, Vel Nagar, Chennai-600062, India. Ph: 9498041938 E-Mail: jaganshanmugam83@gmail.com Tamil Nadu India
2)Mr. A. THIYAGARAJAN
3)Mrs. M. REVATHI
4)C.P. JETLIN
5)Dr. K. DEEPA THILAK
6)Dr. K. KALAISELVI
7)Dr. K. GURUNATHAN
8)Dr. M. UMASELVI
9)Dr. N. KALYANA SUNDARAM
10)N. NAGARAJAN
(72)**Name of Inventor :**
1)Dr. S. JAGAN
2)Mr. A. THIYAGARAJAN
3)Mrs. M. REVATHI
4)C.P. JETLIN
5)Dr. K. DEEPA THILAK
6)Dr. K. KALAISELVI
7)Dr. K. GURUNATHAN
8)Dr. M. UMASELVI
9)Dr. N. KALYANA SUNDARAM
10)N. NAGARAJAN

(57) Abstract :
ABSTRACT OF THE INVENTION An IoT enabled cloud-based system consists of two components namely Smart Health device and wireless sensor devices to monitor the elder people™s health condition and unusual activity continuously at home. It enables the user to keep track the elder people™s health activities and support them dynamically without medical people or family members. The smart health device monitors the elder people™s health parameters such as heart rate, oxygen level and blood pressure whereas medical wireless sensor device senses the elder people™s unusual activities like falling down, breathing problem, sudden changes in the physical body, body temperature etc. The message notification will be sent by the IoT based cloud system to the concerned hospital people and family members immediately once if the above said unusual activities and health parameters cross its beyond the threshold limit. In this way, the automated IoT based Cloud system enables the user to keep track the health condition and any unusual activity continuously without any human support and thus an elder people is managed in cost-effective manner.

No. of Pages : 11 No. of Claims : 5

(12) PATENT APPLICATION PUBLICATION
(21) Application No.202141021560 A
(19) INDIA
(22) Date of filing of Application :12/05/2021
(43) Publication Date : 11/06/2021

(54) Title of the invention : A CONTINUOUS NON-RADIATIVE ELECTICAL IMPEDANCE TOMOGRAPHY COMPUTATION SYSTEM FOR NEONATAL BRAIN CARE

(51) International classification	:A61B0005053000, A61B0005000000, G01N0027020000, G01R0033480000, G01T0001290000
(31) Priority Document No	:NA
(32) Priority Date	:NA
(33) Name of priority country	:NA
(86) International Application No	:NA
Filing Date	:NA
(87) International Publication No	: NA
(61) Patent of Addition to Application Number	:NA
Filing Date	:NA
(62) Divisional to Application Number	:NA
Filing Date	:NA

(71)**Name of Applicant :**
1)Dr KVSSSS Sairam
Address of Applicant :Professor, Department of E&C, NMAMIT NITTE, (Autonomous and Affiliated to VTU, BELAGAVI), Karkala Taluk, Udupi District, Karnataka- 574110 Karnataka India
2)Dr. Hiren Madhukar Dekate
3)Dr N Saranya
4)Dr Sudharsan Jayabalan
5)Dr.Ragavanantham Shanmugam
6)Dr.G.Naga Rama Devi
7)Dr Muralidharan J
8)Ms.Vishakha V Jogdand
9)Mr. Tej Sai Ram Janapaala
10)Mr.Om Prakash Singh
11)Mr.Abhisek Saha
12)Dr . K Sreenivasulu
(72)**Name of Inventor :**
1)Dr KVSSSS Sairam
2)Dr. Hiren Madhukar Dekate
3)Dr N Saranya
4)Dr Sudharsan Jayabalan
5)Dr.Ragavanantham Shanmugam
6)Dr.G.Naga Rama Devi
7)Dr Muralidharan J
8)Ms.Vishakha V Jogdand
9)Mr. Tej Sai Ram Janapaala
10)Mr.Om Prakash Singh
11)Mr.Abhisek Saha
12)Dr . K Sreenivasulu

(57) Abstract :
Electrical impedance tomography is an interesting issue. For the most recent couple of many years, it is another imaging strategy and has advanced throughout. Voltages are taken by infusing a modest quantity of flow and the electrical properties of tissues are resolved and estimations are made. These voltages changed into a tomographic picture by utilizing a recreating calculation. When contrasted with attractive reverberation imaging and figured tomography examines electrical impedance tomograph contains no distinguished dangers and, it is less expensive. In this invention, to improve this innovation and the part of man-made consciousness the thorough audit of progressions and endeavors accomplished and embraced in ongoing work to address this non-straight, not well-presented issue is introduced. A survey of clinical-based applications electrical impedance tomograph has to been introduced.

No. of Pages : 13 No. of Claims : 6

(12) PATENT APPLICATION PUBLICATION
(19) INDIA
(22) Date of filing of Application :13/05/2021
(21) Application No.202141021564 A
(43) Publication Date : 11/06/2021

(54) Title of the invention : SUSTAINING SOLAR DISTILLATION USING ENERGY STORAGE MATERIALS

(51) International classification	:C02F0001040000, C02F0001140000, B01D0005000000, F24S0060300000, B01D0001000000
(31) Priority Document No	:NA
(32) Priority Date	:NA
(33) Name of priority country	:NA
(86) International Application No	:NA
Filing Date	:NA
(87) International Publication No	: NA
(61) Patent of Addition to Application Number	:NA
Filing Date	:NA
(62) Divisional to Application Number	:NA
Filing Date	:NA

(71)**Name of Applicant :**
1)Dr.S.Joe Patrick Gnanaraj
Address of Applicant :Associate Professor Department Of Mechanical Engineering Francis Xavier Engineering College Tirunelveli Tamil Nadu India
2)Dr.Zeenathul Farida Abdul Gani Professor, Francis Xavier Engineering College
3)Dr.S.Imran Khan, AP, Wollega University, Ethiopia
4)Dr. Veer P.Gangwar, Professor, Mittal School Of Business Lovely Professional University
5)Mr.Parthiban P, Assistant Professor, Jyothi Engineering College
(72)**Name of Inventor :**
1)Mr. S.Mayakannan, AP, Vidyaa Vikas College of Engineering and Technology
2)R. Girimurugan, AP, Nandha College of Technology
3)Mr. E. Manohar, Associate Professor, Francis Xavier Engineering College
4)Ms. P. Leela Jancy, Assistant Professor, Sri Sai Ram Institute of Technology

(57) Abstract :
The invention is about water distillation using solar energy which is a non-conventional source of energy widely used nowadays. Here distillation is carried by means of energy storage materials such as bricks, granite, tiles, cement blocks, etc. These materials have the capacity to store heat, hence serves as a perfect alternate for the emerging water demand. The system comprises a stand to hold any of the above said materials which are covered by glass cover to obtain or hold maximum sun rays. There is a collection tank to collect the distilled water. The receiving end is sloped for easier collection of the distillate, thereby the impurities remain underneath.

No. of Pages : 14 No. of Claims : 5

(12) PATENT APPLICATION PUBLICATION
(19) INDIA
(22) Date of filing of Application :13/05/2021

(21) Application No.202141021565 A
(43) Publication Date : 11/06/2021

(54) Title of the invention : KADAPPA STONE WATER PURIFIER SYSTEM

(51) International classification	:C02F0001140000, C02F0009000000, C02F0001000000, C02F0001040000, B28D0007040000
(31) Priority Document No	:NA
(32) Priority Date	:NA
(33) Name of priority country	:NA
(86) International Application No	:NA
Filing Date	:NA
(87) International Publication No	: NA
(61) Patent of Addition to Application Number	:NA
Filing Date	:NA
(62) Divisional to Application Number	:NA
Filing Date	:NA

(71)**Name of Applicant :**
1)Dr.S.JOE PATRICK GNANARAJ
Address of Applicant :Associate Professor Department of Mechanical Engineering Francis Xavier engineering college Tirunelveli Tamil Nadu India
2)DR S RAMACHANDRAN, Professor & Head, CMR Institute of Technology
3)Dr.P.Prakash, AP, University college of engineering, Villupuram
4)Mr.A.Ramesh Udhayakumar, Assoc. Prof, Misrimal Navajee Munoth Jain Engineering College
5)Dr.N.S.Balaji, Post Doctoral Fellow, NIT, Trichy
(72)**Name of Inventor :**
1)Dr.Zeenathul Farida Abdul Gani, Prof., Francis Xavier engineering college
2)Mr.A.RAMESH UDHAYAKUMAR, ASSOCIATE PROFESSOR, MISRIMAL NAVAJEE MUNOTH JAIN ENGINEERING COLLEGE
3)Dr.N.S.Balaji, Post Doctoral Fellow, NIT, Trichy
4)Mr. C.T. Justus Panicker, Research scholar, NIT,Trichy
5)Mr.R.Shishir, Research scholar, NIT, Trichy
6)Dr.P.Prakash, AP, University college of engineering, Villupuram

(57) Abstract :
In this period of increasing demands over purified water, the proposed Kadappa stone based solar distillation system is an efficient product to produce distilled water. The system comprises of a basin comprising unpurified water. saw dust and wick materials in this water performs initial filtration of the impurities. This filtered water is subjected to capture solar energy by means of Kadappa stone at the top surface covered with glass cover. There are collection trays on either sides for collecting the pure distillate. The entire setup is kept on a stand. Hence by means of the non-conventional source of energy distillation is performed.

No. of Pages : 15 No. of Claims : 5

(12) PATENT APPLICATION PUBLICATION
(21) Application No.202141021578 A
(19) INDIA
(22) Date of filing of Application :13/05/2021
(43) Publication Date : 11/06/2021

(54) Title of the invention : Real Time Monitoring of Water Quality Parameters in Aquaculture and Automation of Aerators Based System Using IoT

(51) International classification	:A01K0063040000, A01K0063000000, B01F0003040000, C02F0003200000, A01K0061000000
(31) Priority Document No	:NA
(32) Priority Date	:NA
(33) Name of priority country	:NA
(86) International Application No	:PCT//
Filing Date	:01/01/1900
(87) International Publication No	: NA
(61) Patent of Addition to Application Number	:NA
Filing Date	:NA
(62) Divisional to Application Number	:NA
Filing Date	:NA

(71)**Name of Applicant :**
1)Dr. Kumar Raja D R
Address of Applicant :Associate Professor School of C & IT REVA University Bengaluru Karnataka India
(72)**Name of Inventor :**
1)Dr. Kumar Raja D R
2)Dr. G Parthasarathy
3)Dr. Mallikarjun M. Kodabagi
4)G Hemanth Kumar
5)Dr. P Ramesh

(57) Abstract :
In the traditional aquaculture model, the farmer does not know the level of oxygen in the water and has to go to the pond to manually turn on the aerator. Sometimes there may be a delay in turning on the aerators. This leads to a lack of oxygen in the pond, with serious consequences. As the water temperature rises, the metabolic rate of the fish improves and the amount of oxygen in the water decreases which causes the growth of .Low water temperatures reduce the frequency of fish spawning and increase the amount of oxygen in the water. In aquaculture, the pH value is an essential measure of the acidity of the water or the soil. Fish can no longer survive in water pH below 4 and pH above11.The optimal pH value for fish is from 6.5 to 9. The fish grows poorly and their reproduction is impaired by higher or lower pH values. The development of smart aquaculture is possible only with the help of sensors and requires precise control of devices, in such cases sensors play an important role. The smart aquaculture system uses a sensor to acquire the information about various parameters. Based on information of parameters such as water temperature, pH value and dissolved oxygen, as well as predefined thresholds this information is transmitted to a microcontroller that can take action according to a threshold levels, and the action taken by the controller can change the state of the aeration device and transmit the status directly to the farmer's mobile phone.

No. of Pages : 8 No. of Claims : 3

(12) PATENT APPLICATION PUBLICATION
(19) INDIA
(22) Date of filing of Application :13/05/2021
(21) Application No.202141021584 A
(43) Publication Date : 11/06/2021

(54) Title of the invention : AUTONOMOUS WHEELCHAIR ASSISTED SPEECH RECOGNITION SYSTEM FOR PHYSICALLY CHALLENGED ONES

(51) International classification	:A61G0005100000, A61G0005120000, A61G0003060000, A61G0005040000, A61G0005140000
(31) Priority Document No	:NA
(32) Priority Date	:NA
(33) Name of priority country	:NA
(86) International Application No	:NA
Filing Date	:NA
(87) International Publication No	: NA
(61) Patent of Addition to Application Number	:NA
Filing Date	:NA
(62) Divisional to Application Number	:NA
Filing Date	:NA

(71)**Name of Applicant :**
1)Dr. V.S.AKSHAYA
Address of Applicant :HEAD HIGHER STUDIES & INTERNATIONAL RELATIONS, PROFESSOR, DEPARTMENT OF COMPUTER SCIENCE AND ENGINEERING, SRI ESHWAR COLLEGE OF ENGINEERING, VADASITHUR, KINATHUKADAVU - KATTAMPATTI RD, KONDAMPATTY, TAMIL NADU 641202 Tamil Nadu India
2)Ms.P.CHITRA
3)Dr. M. VARGHEESE
4)Ms. N. GAYATHRI
5)Ms. G. PRIYANKA
6)Dr. G. NALLASIVAN
7)Dr. N. YUVARAJ
8)Mr. R. ARSHATH RAJA
9)Dr. M. RAMKUMAR
(72)**Name of Inventor :**
1)Dr. V.S.AKSHAYA
2)Ms.P.CHITRA
3)Dr. M. VARGHEESE
4)Ms. N. GAYATHRI
5)Ms. G. PRIYANKA
6)Dr. G. NALLASIVAN
7)Dr. N. YUVARAJ
8)Mr. R. ARSHATH RAJA
9)Dr. M. RAMKUMAR

(57) Abstract :
The autonomous wheelchairs tend to extend their operations with conventional devices that help in navigation and controlled movements. Autonomous wheelchairs enable the lives of physically challenged ones with severe impairments to increase their mobility range. With the assistance of either hand or legs, the wheelchairs can be operated to their target distance. However, people with disability on both hand and legs make the operation of wheelchair difficult. It is hence necessary for such persons to manually control the wheelchair with their voices. In this proposal, we develop a speech-assisted wheelchair device that automatically controls the movement of it. It can either be controlled manually or automatically, where the disabled ones are placed over it. With the help of an accelerometer, the movements can be made and with their voice assistant, the destination can be set.

No. of Pages : 15 No. of Claims : 8

(12) PATENT APPLICATION PUBLICATION
(19) INDIA
(22) Date of filing of Application :13/05/2021
(21) Application No.202141021635 A
(43) Publication Date : 11/06/2021

(54) Title of the invention : DESIGN OF SQUARE CROSS SECTION FRAME BICYCLE

(51) International classification	:B62K0019020000, B62M0009020000, B62M0001260000, B62K0017000000, F16C0033340000
(31) Priority Document No	:NA
(32) Priority Date	:NA
(33) Name of priority country	:NA
(86) International Application No	:NA
Filing Date	:NA
(87) International Publication No	: NA
(61) Patent of Addition to Application Number	:NA
Filing Date	:NA
(62) Divisional to Application Number	:NA
Filing Date	:NA

(71)**Name of Applicant :**
1)Mr.BOKKA TEJA VENKATESH
Address of Applicant :DEPARTMENT OF MECHANICAL ENGINEERING, MARRI LAXMAN REDDY INSTITUTE OF TECHNOLOGY AND MANAGEMENT, DUNDIGAL, HYDERABAD 500 043, TELANGANA, INDIA Telangana India
2)Mr.KRANTHI KUMAR SINGAM
3)Mr.U.SUDHAKAR
4)Dr. JANI.S.P
5)Mr.KARRI THARUN KUMAR
6)Mr.THATIPERTHI TARUN GOPI
7)Ms.SRIRLA MOUNIKA
8)Mr.MENGU VIJAY JOHN
9)Ms.K.SRAVANTHI
10)Dr. P.SENTHIL KUMAR
(72)**Name of Inventor :**
1)Mr.BOKKA TEJA VENKATESH
2)Mr.KRANTHI KUMAR SINGAM
3)Mr.U.SUDHAKAR
4)Dr. JANI.S.P
5)Mr.KARRI THARUN KUMAR
6)Mr.THATIPERTHI TARUN GOPI
7)Ms.SRIRLA MOUNIKA
8)Mr.MENGU VIJAY JOHN
9)Ms.K.SRAVANTHI
10)Dr. P.SENTHIL KUMAR

(57) Abstract :
ABSTRACT DESIGN OF SQUARE CROSS SECTION FRAME - BICYCLE This patent disclosure covers the design and development of bicycle frame which is useful for both urban and trek purpose. The cross sectional design is inspired by Beams of buildings and compared to circular cross section square cross section have more moment of inertia which reduces the stress developed in it i.e. bending stress. The utilization of material type known plans and designs is known in the earlier workmanship. The plans and arrangements recently contrived and used to slaughter different sorts of defects and variations by ordinary techniques and contraptions are known to comprise fundamentally of recognizable, expected, and evident underlying setups, despite the bunch of plans incorporated by the swarmed earlier craftsmanship which has been created for the satisfaction of innumerable goals and necessities. Triangular frame is chosen to be favorable for center of gravity. Joints are mostly preferred to concentrate and distribute more load uniformly. The design of bicycle frame gives the robust effect. Chain and sprocket mechanism is used for the operation of power transmission that enhances the required pedal stroke rotations. Based on urban cycles this modal would attract present generation for its ultra-stylish robust frame.

No. of Pages : 10 No. of Claims : 7

(12) PATENT APPLICATION PUBLICATION
(21) Application No.202141021636 A
(19) INDIA
(22) Date of filing of Application :13/05/2021
(43) Publication Date : 11/06/2021

(54) Title of the invention : SYSTEM AND METHOD OF PRODUCING BIOGAS USING ORGANIC WASTE FOR HOUSEHOLD PURPOSE

(51) International classification :C12P0005020000, C12M0001107000, C12M0001000000, C05F0017500000, C02F0011040000
(31) Priority Document No :NA
(32) Priority Date :NA
(33) Name of priority country :NA
(86) International Application No :NA
Filing Date :NA
(87) International Publication No : NA
(61) Patent of Addition to Application Number:NA
Filing Date :NA
(62) Divisional to Application Number :NA
Filing Date :NA

(71)**Name of Applicant :**
1)Dr.M.DEVI
Address of Applicant :PROFESSOR, DEPARTMENT OF CIVIL ENGINEERING, VIVEKANANDHA COLLEGE OF TECHNOLOGY FOR WOMEN, ELAYAMPALAYAM , TIRUCHENGODE TK, NAMAKKAL DISTRICT,TAMIL NADU 637 205 Tamil Nadu India
2)Dr.M.M.SARAVANAN
3)Mr.A.ANANTHAKUMAR
4)Dr.C.G.DEEPANRAJ
5)Mr.G.VISWANATHAN
6)Mr.S.PANNEERSELVAM
(72)**Name of Inventor :**
1)Dr.M.DEVI
2)Dr.M.M.SARAVANAN
3)Mr.A.ANANTHAKUMAR
4)Dr.C.G.DEEPANRAJ
5)Mr.G.VISWANATHAN
6)Mr.S.PANNEERSELVAM

(57) Abstract :
ABSTRACT SYSTEM AND METHOD OF PRODUCING BIOGAS USING ORGANIC WASTE FOR HOUSEHOLD PURPOSE
Biogas is an old approach and creating innovation in late energy patterns. Food squanders having high capability of biogas creation if appropriately blended in with cow compost in view of rich nitrogen and sugars content. Food squanders are effectively accessible; more than 150 tons of food squander are unloaded into ground each day. This task assessed that combination of food squander with cow fertilizer gives required nature of biogas and day by day feed of a similar will give great biogas yield and we can save the LPG utilization gracious family applications and give the loss as compost to cultivating. The test outcomes give that the food squander blended in with cow excrement for creating biogas gives 5.32 % of expanded methane content than the methane got from the Cow compost alone. The charging of Food squander alone delivers biogas which is 5.9 % lesser methane content than the methane acquired from the biogas from cow fertilizer. It is better that the biogas created from blending of food squander alongside cow fertilizer delivers better nature of biogas when contrasted and just cow gung or just food squander as the feed.

No. of Pages : 22 No. of Claims : 5

(12) PATENT APPLICATION PUBLICATION
(21) Application No.202141021654 A
(19) INDIA
(22) Date of filing of Application :13/05/2021
(43) Publication Date : 11/06/2021

(54) Title of the invention : PERFORMANCE OPTIMIZATION OF RECONFIGURABLE MANUFACTURING SYSTEM USING DUAL STEP METAHEURISTIC APPROACH

(51) International classification	:G06Q0010040000, G06Q0050060000, G06Q0010060000, G06F0111060000, G06F0030170000
(31) Priority Document No	:NA
(32) Priority Date	:NA
(33) Name of priority country	:NA
(86) International Application No	:NA
Filing Date	:NA
(87) International Publication No	: NA
(61) Patent of Addition to Application Number	:NA
Filing Date	:NA
(62) Divisional to Application Number	:NA
Filing Date	:NA

(71)**Name of Applicant :**
1)Suresh Babu G
Address of Applicant :Research Scholar & Assistant Professor Mechanical Engineering VTU RRC, VTU PG Center, Muddenahalli, Chickballapur, 562101 Annamacharya Institute of Technology & Sciences, New Boayanapalli, Rajampet, 516126 sureshbabuhere@gmail.com 9949224453 Karnataka India
2)Dr N Chikkanna
3)Puneet Shetteppanavar
(72)**Name of Inventor :**
1)Suresh Babu G
2)Dr N Chikkanna
3)Puneet Shetteppanavar

(57) Abstract :
TITLE OF INVENTION: Performance Optimization of Reconfigurable Manufacturing System Using Dual Step Metaheuristic Approach Field of Invention: Mechanical Engineering ABSTRACT Reconfigurable manufacturing system aka RMS is a novice topology in manufacturing sector that is designed in accordance with the product requirement, however re-configurability is considered as the non-functional system requirement and it is long term behavior. Thus considering the conventional approach dynamic change is highly improbable; hence it is necessary to design the model that has the dynamic change capacity. In this Invention, we have developed (DSMO) dual step metaheuristic optimized approach to solve the two distinctive problem; in first step we optimize the product changes reaction. In second step, we develop the optimized layout for machine selection by optimizing the machine floor arrangement and position of machine. Further dual step mechanism is evaluated through comparison analysis with the existing model of ANC90. Moreover, evaluation is performed by considering two cases adopted from the existing model; in case 1 cost comparison has been carried out whereas in case 2 re-configuration cost, total cost and capital cost are compared. Further comparison has been carried out considering the various scenarios in both cases and comparative analysis indicates that proposed methodologies simply outperforms the existing model.

No. of Pages : 11 No. of Claims : 1

(12) PATENT APPLICATION PUBLICATION
(21) Application No.202141021675 A
(19) INDIA
(22) Date of filing of Application :13/05/2021
(43) Publication Date : 11/06/2021

(54) Title of the invention : THE COGNITIVE LINGUISTIC MODEL FOR LITERARY TEXT ANALTYTICS

(51) International classification	:G06F0040300000, G06F0040205000, G09B0019060000, G09B0017000000, G06F0016330000
(31) Priority Document No	:NA
(32) Priority Date	:NA
(33) Name of priority country	:NA
(86) International Application No	:NA
Filing Date	:NA
(87) International Publication No	: NA
(61) Patent of Addition to Application Number	:NA
Filing Date	:NA
(62) Divisional to Application Number	:NA
Filing Date	:NA

(71)**Name of Applicant :**
1)Dr. Bavani Rekha A
Address of Applicant :Designation: Assistant Professor Department: English Institution address: Women's Christian College, Chennai. Email id: bavanirekha@wcc.edu.in Mobile No: 9942441864 Tamil Nadu India
2)Dr. N. Ayyanathan
3)Puneet Shetteppanavar
(72)**Name of Inventor :**
1)Dr. Bavani Rekha A
2)Dr. N. Ayyanathan
3)Puneet Shetteppanavar

(57) Abstract :
Page 1 of 1 TITLE: THE COGNITIVE LINGUISTIC MODEL FOR LITERARY TEXT ANALTYTICS ABSTRACT Cognitive Linguistic model interprets the given literary text at the linguistic, literary and aesthetic level. Natural language Processing is applied to assess the interpreting skills of the literary text with the help of the proposed content specification of Cognitive Linguistics. Furthermore, the Cognitive Linguistic model observes the learner™s strengths and weaknesses using Schema theory to develop the reading comprehension of the literary text with the assessment metrics designed in Content Specification of Cognitive Linguistics

No. of Pages : 13 No. of Claims : 1

(12) PATENT APPLICATION PUBLICATION
(21) Application No.202141021703 A
(19) INDIA
(22) Date of filing of Application :13/05/2021
(43) Publication Date : 11/06/2021

(54) Title of the invention : MODEL PREDICTIVE CURRENT CONTROL OF SINGLE-PHASE 9-LEVEL REDUCED SWITCH MULTILEVEL INVERTER

(51) International classification	:H02M0007483000, H02J0003010000, G05B0013040000, H02J0003180000, H02M0007797000
(31) Priority Document No	:NA
(32) Priority Date	:NA
(33) Name of priority country	:NA
(86) International Application No	:NA
Filing Date	:NA
(87) International Publication No	: NA
(61) Patent of Addition to Application Number	:NA
Filing Date	:NA
(62) Divisional to Application Number	:NA
Filing Date	:NA

(71)**Name of Applicant :**
1)Dr.K.Rameshkumar
Address of Applicant :Assistant Professor, Dept. of Electrical and Electronics Engineering, Dr. Mahalingam College of Engineering and Technology, Pollachi. Tamil Nadu India
2)Dr. A.Senthilkumar
3)Dr. M.Kaliamoorthy
4)Mr. P. Kathirvel
5)Mr.A.Maideen Abdhulkader Jeylani
(72)**Name of Inventor :**
1)Dr.K.Rameshkumar
2)Dr. A.Senthilkumar
3)Dr. M.Kaliamoorthy
4)Mr. P. Kathirvel
5)Mr.A.Maideen Abdhulkader Jeylani

(57) Abstract :
In this work, a Model Predictive Current Control (MPCC) of single-phase 9-level reduced switch Multilevel Inverter (MLI) has been proposed for improving power quality. The discrete model of the system is used to predict the future load current for each possible switching state at every sampling instant. For every sampling instant, the controller estimates the cost function. The switching state which reduces the cost function is chosen and applied to the MLI. This invention evaluated in terms of Total Harmonic Distortion (THD) and reference current tracking. The effectiveness of the proposed current control method has been validated by MATLAB/Simulink environment. The obtained results shows that the proposed current control method perform well in steady state and dynamic operating conditions.

No. of Pages : 6 No. of Claims : 8

(12) PATENT APPLICATION PUBLICATION
(21) Application No.202141021727 A
(19) INDIA
(22) Date of filing of Application :13/05/2021
(43) Publication Date : 11/06/2021

(54) Title of the invention : METHOD FOR MANUFACTURING GYPSUM CEMENT COMPOSITE REINFORCED BRICK •

(51) International classification	:C04B0028140000, C04B0111000000, B28B0023000000, B28B0007000000, B29C0070300000	(71)**Name of Applicant :** **1)M/S. RADHA INDUSTRIES** Address of Applicant :NO. 3, E.C.R. ROAD, OPP. PONNUSAMY HOTEL, LAWSPET, PUDUCHERRY - 605008 Pondicherry India
(31) Priority Document No	:NA	(72)**Name of Inventor :**
(32) Priority Date	:NA	**1)Mr. K. PREGASH**
(33) Name of priority country	:NA	
(86) International Application No	:NA	
Filing Date	:NA	
(87) International Publication No	: NA	
(61) Patent of Addition to Application Number	:NA	
Filing Date	:NA	
(62) Divisional to Application Number	:NA	
Filing Date	:NA	

(57) Abstract :
ABSTRACT METHOD FOR MANUFACTURING GYPSUM CEMENT COMPOSITE REINFORCED BRICK • manufactures the brick in a simple manner with reduced curing time and also does not require cement plastering for inner wall. The method comprising the steps of: a. forming mold of required size and shape; b. applying releasing agent or oil on inner side of mold; c. mixing calcined gypsum with water in ratio of 100:0.65 and pouring mixture in mold to form first inner gypsum layer (2); d. placing glass fibers in ratio of 0.025 on gypsum layer before setting of the gypsum layer to form middle glass fiber reinforcement layer (3); e. mixing fly ash or sand, lime, cement and calcined gypsum in ratio of 69:20:8:3 one by one or as whole in water at ratio of 0.65 and in aluminum powder at ratio of 0.08 and pouring prepared mixture on glass fiber layer before setting of gypsum and glass fiber layers to form outer cement layer (1); f. removing brick consisting of cement layer, gypsum layer and glass fiber reinforcement layer, from mold after curing process; g. drying removed brick naturally or artificially in heating room, pre-curing process, auto-clave process, etc.; h. wire cutting gypsum cement brick (GCB) in case of requirements; and i. subjecting brick to curing process naturally or artificially based on weather conditions. Refer Figure 1

No. of Pages : 19 No. of Claims : 10

(12) PATENT APPLICATION PUBLICATION
(19) INDIA
(22) Date of filing of Application :13/05/2021
(21) Application No.202141021733 A
(43) Publication Date : 11/06/2021

(54) Title of the invention : A SMART IOT BASED INSTANT TOXIC CONTENT DETECTION SYSTEM

(51) International classification	:B65D0081050000, G01N0027120000, G01N0033000000, G01N0021770000, F17C0013120000
(31) Priority Document No	:NA
(32) Priority Date	:NA
(33) Name of priority country	:NA
(86) International Application No	:NA
Filing Date	:NA
(87) International Publication No	: NA
(61) Patent of Addition to Application Number	:NA
Filing Date	:NA
(62) Divisional to Application Number	:NA
Filing Date	:NA

(71)**Name of Applicant :**
1)Mr. Arun R
Address of Applicant :Assistant Professor, Department of Computer Science and Engineering, Hindusthan Institute of Technology, Othakalmandapam PO Coimbatore 641032. Tamil Nadu India
2)Ms.S. Priyadarshini
3)Dr.P.Selvaraj
4)Dr K.Madhivanan
5)Dr Velmurugan J
6)Dr. Chandra Prakash Lora
7)Dr. A.Jebaraj Ratnakumar
8)Dr.S.Balakrishnan
(72)**Name of Inventor :**
1)Mr. Arun R
2)Ms.S. Priyadarshini
3)Dr.P.Selvaraj
4)Dr K.Madhivanan
5)Dr Velmurugan J
6)Dr. Chandra Prakash Lora
7)Dr. A.Jebaraj Ratnakumar
8)Dr.S.Balakrishnan

(57) Abstract :
With the rapid development of Indian industrial production, the unique physical of gas in the process of food storage, frozen foods, inflatable packaging, special fuel production, hyperbaric oxygen therapy and the production of chemical products such as human organs. And chemical properties have been widely used. We can see that gas occupies a very important place in human life and the national economy. However, widespread use of gas inevitably leads to the problem of toxic gas leaks. Gas leakage can be easily detected and controlled by applying internet of things-based system. In this work, we are using Arduino Microcontroller which is used to monitor harmful gases and also to intimate alert message to safety control board of industry. Ardunio Microcontroller board is used as central microcontroller which is connected with sensor. LPG gas detector system senses the LPG gas using MQ2 gas sensor. Butane gas is odorless, colorless, and highly flammable at room temperature, and causes serious health effects when inhaled directly. MQ2 is also useful for detecting H2, LPG, CH4, CO, Alcohol, Smoke or Propane. A gas sensor is a device which detects the presence or concentration of gases in the atmosphere. Based on the concentration of the gas the sensor produces a corresponding potential difference by changing the resistance of the material inside the sensor, which can be measured as output voltage. Alcohol sensor (MQ3) which can detect the presence of alcohol gases at concentrations from 0.05 mg/L to 10 mg/L.

No. of Pages : 6 No. of Claims : 4

(12) PATENT APPLICATION PUBLICATION
(21) Application No.202141021737 A
(19) INDIA
(22) Date of filing of Application :13/05/2021
(43) Publication Date : 11/06/2021

(54) Title of the invention : A METHOD AND A SYSTEM FOR PROVIDING A SINGLE CROSS PLATFORM MOBILE APPLICATION TO DELIVER ON DEMAND IMMERSIVE CONTENTS

(51) International classification	:H04N0021630000, H04L0001000000, G06F0011360000, H04L0001180000, G06F0008100000	(71)**Name of Applicant :** **1)3RDFLIX VISUAL EFFECTS PRIVATE LIMITED** Address of Applicant :SY NO 37/A 37P, PLOT NO. 6P, 2-91/77/2/ST/2 2ND FLOOR, SIGNATURE TOWERS, KONDAPUR, HYDERABAD, TELANGANA 500084 INDIA Telangana India
(31) Priority Document No	:NA	
(32) Priority Date	:NA	(72)**Name of Inventor :**
(33) Name of priority country	:NA	**1)Subbarao Siddabattula**
(86) International Application No	:PCT//	**2)Arpita Saxena**
Filing Date	:01/01/1900	**3)Rusheel Sandri**
(87) International Publication No	: NA	
(61) Patent of Addition to Application Number	:NA	
Filing Date	:NA	
(62) Divisional to Application Number	:NA	
Filing Date	:NA	

(57) Abstract :
ABSTRACT A METHOD AND A SYSTEM FOR PROVIDING A SINGLE CROSS PLATFORM MOBILE APPLICATION TO DELIVER ON DEMAND IMMERSIVE CONTENTS A method (200) for providing a single cross platform mobile application to deliver on demand immersive contents, comprises processors which are coupled to a non-transitory storage device and operable to perform the steps of providing (210) platform specific data in a pipeline in a gaming platform; providing (220) a cross platform framework to stipulate a library; providing (230) a data encapsulated module of the gaming platform which resides inside the cross platform framework, tracking (240) the platform specific data using the cross platform framework, encrypting each platform specific data to generate references for the respective platform specific data and passing the generated references to the data encapsulated module, invoking (250) the data encapsulated module of the gaming platform using native side on demand, to render the platform specific data corresponding to the references and deliver immersive content based on each reference, and displaying and manipulating (260) the delivered immersive content. [Figure 2]

No. of Pages : 27 No. of Claims : 14

(12) PATENT APPLICATION PUBLICATION
(21) Application No.202141021773 A
(19) INDIA
(22) Date of filing of Application :14/05/2021
(43) Publication Date : 11/06/2021

(54) Title of the invention : PHASE SHIFTING TRANSFORMER APPLICATION TO REDUCE POWER CONGESTION AND LOOP FLOWS IN INTERCONNECTED POWER SYSTEMS

(51) International classification	:H02J0003060000, H02J0003380000, G06Q0050060000, H02J0003180000, H02J0003000000
(31) Priority Document No	:NA
(32) Priority Date	:NA
(33) Name of priority country	:NA
(86) International Application No	:NA
Filing Date	:NA
(87) International Publication No	: NA
(61) Patent of Addition to Application Number	:NA
Filing Date	:NA
(62) Divisional to Application Number	:NA
Filing Date	:NA

(71)**Name of Applicant :**
1)Ananda M H
Address of Applicant :Ananda M H Scholar, V.T.U/ Assistant professor, School of Electrical and Electronics Engineering, REVA University, Rukmini knowledge park, kattigenahalli, Yelahanka, Bengaluru, 560064 Karnataka,India Karnataka India
2)Dr. M.R. Shivakumar
(72)**Name of Inventor :**
1)Ananda M H
2)Dr. M.R. Shivakumar

(57) Abstract :
The exaggerated penetration of wind and solar power, and also the liberalized electricity market making the power system network interconnected and complex. As the power demand is increasing day by day the complexity of operating large power system is also increasing. Congestion within the transmission grid could be a development that is encountered additional usually than before, and so power flow management is a difficulty that becomes progressively vital. Unexpected power flows (also called loop flows) are an increasing problem within the interconnected power systems. These flows will have a detrimental impact on the safe functioning of integrated power networks which will hinder their ability to conduct cross-border trade. This deals with two interconnected parallel power system network and the power flow control by use phase shifting transformer (PST) in between. PSCAD simulation explores that, PSTs installed in the tie-lines have the capability of regulating the power flow, alleviate line overloads, modification parallel line sharing. The results emphasize the importance of PST to facilitate transfer of energy throughout regional transmission interconnection. PST-based power flow management has the potential to manage power congestion while also improving network security.

No. of Pages : 17 No. of Claims : 7

(12) PATENT APPLICATION PUBLICATION
(21) Application No.202141021832 A
(19) INDIA
(22) Date of filing of Application :14/05/2021
(43) Publication Date : 11/06/2021

(54) Title of the invention : WIRELESS INTERCOMMUNICATIVE PRODUCT FOR DISCERN MEDICINES IN PHARMACIES USING BLUETOOTH

(51) International classification	:H04W0004800000, G06Q0050220000, A61J0001000000, G16H0020100000, C07H0015040000	(71)**Name of Applicant :**
(31) Priority Document No	:NA	**1)Sujo Oommen**
(32) Priority Date	:NA	Address of Applicant :Assistant Professor School of Electrical & Electronics Engineering, REVA University, Bangalore-64 Karnataka India
(33) Name of priority country	:NA	**2)Akhil P H**
(86) International Application No	:NA	**3)Akash V Thabaj**
Filing Date	:NA	**4)Dheeraj S**
(87) International Publication No	: NA	**5)Aman Irshad**
(61) Patent of Addition to Application Number	:NA	(72)**Name of Inventor :**
Filing Date	:NA	**1)Sujo Oommen**
(62) Divisional to Application Number	:NA	**2)Akhil P H**
Filing Date	:NA	**3)Akash V Thabaj**
		4)Dheeraj S
		5)Aman Irshad

(57) Abstract :
Smart Technologies plays a promising role in various applications in our daily life ranging from farming, education, governance, automobiles etc. Smart devices, wireless technologies and numerous mobile applications has made man to use technologies at their fingertips. Wireless Technology has also influenced the life style of people and has helped improving the quality of life. Now a days, smart devices have become the need of the hour just because of its monitoring capacity, flexible usage, less maintenance, less power consumption, saving time and energy, faster and timely outputs, safety, security. Interaction between smart devices and mobile and web applications makes it much more attractive, user friendly and flexible as it is compatible with all the mobile and web platforms. The proposed invention is about the usage of such wireless technologies based on Bluetooth that helps in spotting medicines in pharmacies. Pharmacists must carefully process, store, and track an outsized volume of drugs also. This proposed cost effective invention providing a wireless Bluetooth- android based technology that can help in locating the medicines in pharmacies and also helps kept the track of the particular medicine available in the slot which in turn helps in saving time. LEDs are connected to the spots where different medicines are kept. The number of medicines and the names of the medicines along with the spots where they are kept will be fed to the Arduino through a program. The user will also be provided with an option to change the medicine names and their locations accordingly and along with these facilities, can also add a particular medicine to the above list provided that there will be an indicator placed at the location where the medicine is going to be kept. The Proposed system can be modified to be used in libraries for spotting books, in large warehouses to spot a particular product, in parking slots to know the slot of a parked vehicle.

No. of Pages : 15 No. of Claims : 4

(12) PATENT APPLICATION PUBLICATION
(19) INDIA
(22) Date of filing of Application :14/05/2021
(21) Application No.202141021846 A
(43) Publication Date : 11/06/2021

(54) Title of the invention : INTERCONNECTION OF USB DEVICES OVER THE CLOUD

(51) International classification	:H04L0029060000, H04L0029080000, H04L0012280000, H04B0007240000, G06F0021600000
(31) Priority Document No	:NA
(32) Priority Date	:NA
(33) Name of priority country	:NA
(86) International Application No	:NA
Filing Date	:NA
(87) International Publication No	: NA
(61) Patent of Addition to Application Number	:NA
Filing Date	:NA
(62) Divisional to Application Number	:NA
Filing Date	:NA

(71)**Name of Applicant :**
1)Dr. J. VENKATESH
Address of Applicant :PROFESSOR, CSE, CHENNAI INSTITUTE OF TECHNOLOGY, SARATHY NAGAR, KUNDRATHUR, CHENNAI-69. Tamil Nadu India
2)Dr. R. JANARTHANAN
3)Dr. CHIRRA KESAVA REDDY
4)Mr. V. VISHWA RAJ
(72)**Name of Inventor :**
1)Dr. J. VENKATESH
2)Dr. R. JANARTHANAN
3)Dr. CHIRRA KESAVA REDDY
4)Mr. V. VISHWA RAJ

(57) Abstract :
Interconnection of USB devices over the cloud is an essential need of an hour invention as far as data transfer is considered. In the existing mechanism, there is no technique to transfer data between data storage devices without an intermediate device and it is practically impossible to have a device that is compatible with the devices whose data has to be exchanged or transferred. The proposed invention facilitates the transfer of data over the cloud without an intermediate device wherein the two devices will be connected to the cloud server through an authentication and authorization procedure. Thus, the proposed invention will be cost-effective and user friendly along with firewall security for transfer of data and databases between two different devices.

No. of Pages : 15 No. of Claims : 5

(12) PATENT APPLICATION PUBLICATION
(21) Application No.202141021871 A
(19) INDIA
(22) Date of filing of Application :14/05/2021
(43) Publication Date : 11/06/2021

(54) Title of the invention : CAVITIES TO CONTROL BASE FLOWS IN OF HIGH SPEED VEHICLES

(51) International classification	:H04L0012801000, H04W0088080000, H03K0017950000, B01D0029940000, B32B0005180000
(31) Priority Document No	:NA
(32) Priority Date	:NA
(33) Name of priority country	:NA
(86) International Application No	:NA
Filing Date	:NA
(87) International Publication No	: NA
(61) Patent of Addition to Application Number	:NA
Filing Date	:NA
(62) Divisional to Application Number	:NA
Filing Date	:NA

(71)**Name of Applicant :**
1)MOHAMMED ASADULLAH THAKUR
Address of Applicant :Professor, Department of Mechanical Engineering, Lords Institute of Engineering and Technology, Survey No. 32, Near Police Academy, Appa Junction, Himayathsagar, Hyderabad, Telangana 500091 Telangana India
2)AZEEM HAFIZ P A
3)HUSSAIN FAYAZ
4)MANZOORE ELAHI M SOUDAGAR
(72)**Name of Inventor :**
1)MOHAMMED ASADULLAH THAKUR
2)AZEEM HAFIZ P A
3)HUSSAIN FAYAZ
4)MANZOORE ELAHI M SOUDAGAR

(57) Abstract :
Embodiments of the present disclosure are related to control of base flows in the high-speed vehicles using cavities. The cavities in compressible regime can be optimized for a critical diameter, critical depth and critical gap between them. The base flow control apparatus for high-speed vehicle comprising a structure configured in the high-speed vehicle. The structure comprises a solo-cavity to increase base-pressure by pulsating effect, thereby controlling the base flows, and multiple-cavities configured to increase a base pressure by pulsating effect periodically. This periodic excitation happens only in multiple cavities due to the optimization of gap between cavities. By varying gap, the pattern or alignment may be changed, thus controlling periodic excitation for effective control of base flows. The base flow controller increases the base pressure with no input energy. The base flow control in high-speed vehicles eliminates the energy needed to run it, and reduces fuel consumption and operational cost.

No. of Pages : 23 No. of Claims : 9

(12) PATENT APPLICATION PUBLICATION
(19) INDIA
(22) Date of filing of Application :14/05/2021
(21) Application No.202141021897 A
(43) Publication Date : 11/06/2021

(54) Title of the invention : BATTERY SWAPPING SMART STATION FOR FUTURE E-VEHICLE TRANSPORTATION

(51) International classification	:B60L0053800000, B60S0005060000, B60L0053300000, H02J0007000000, B60L0053140000
(31) Priority Document No	:NA
(32) Priority Date	:NA
(33) Name of priority country	:NA
(86) International Application No	:NA
Filing Date	:NA
(87) International Publication No	: NA
(61) Patent of Addition to Application Number	:NA
Filing Date	:NA
(62) Divisional to Application Number	:NA
Filing Date	:NA

(71)**Name of Applicant :**
1)Dr.T.Vinoth Kumar
Address of Applicant :Assistant Professor, Department of Electrical and Electronics Engineering, RVS College of Engineering and Technology, Kumaran kottam campus, Trichy Road, Coimbatore-641402. Tamil Nadu India
2)Dr.N.Yogambal Jayalakshmi
3)Mr.K.Saravanan
4)Dr. C. Vimalraj
5)Mr.K.Vairaperumal
6)Mr. B.Janarthanan
7)Dr.A.Kalaiarasi
8)Mr.C.S.Sundar Ganesh
9)Mrs.N.Lakshmipriya
10)Mr. K. Viswanathan
(72)**Name of Inventor :**
1)Dr.T.Vinoth Kumar
2)Dr.N.Yogambal Jayalakshmi
3)Mr.K.Saravanan
4)Dr. C. Vimalraj
5)Mr.K.Vairaperumal
6)Mr. B.Janarthanan
7)Dr.A.Kalaiarasi
8)Mr.C.S.Sundar Ganesh
9)Mrs.N.Lakshmipriya
10)Mr. K. Viswanathan

(57) Abstract :
Abstract Battery Swapping Smart Station for Future E-Vehicle Transportation In today's world, Innovation organizations have focused on the intelligent nature of a battery swap station infrastructure with the potential to provide a standardized basis on which to deploy the large-scale fleet of hybrid successfully and electric vehicles (i. The swap battery station will calibrate its electrical-vehicle deployment subsystem by carrying out the same approach as in current petrol refuelling plants in which part or fully-charged discharged batteries are substituted or replaced by a couple of minutes. The method of battery swaps has been developed as a promising technology for the conventional EV recharging station approach since it offers individual players a wider experience. This invention idea is dedicated to integrating the battery exchange station with infrastructural, technological, charging and the main problems of the battery exchange station.

No. of Pages : 17 No. of Claims : 5

(12) PATENT APPLICATION PUBLICATION
(21) Application No.202141021913 A
(19) INDIA
(22) Date of filing of Application :15/05/2021
(43) Publication Date : 11/06/2021

(54) Title of the invention : CRYSTAL CHEMISTRY, RIETVELD ANALYSIS, MAGNETIC AND MICROWAVE PROPERTIES OF CU-DOPED STRONTIUM HEXAFERRITES

(51) International classification	:C04B0035260000, C04B0035626000, C01G0049000000, H01F0001110000, G01N0022000000
(31) Priority Document No	:NA
(32) Priority Date	:NA
(33) Name of priority country	:NA
(86) International Application No	:NA
Filing Date	:NA
(87) International Publication No	: NA
(61) Patent of Addition to Application Number	:NA
Filing Date	:NA
(62) Divisional to Application Number	:NA
Filing Date	:NA

(71)**Name of Applicant :**
1)N. Maramu, Assistant Professor/Department of Physics, Kakatiya Institute of Technology and Science
Address of Applicant :Kakatiya Institute of Technology and Science, Hasanparthy, Warangal, Telangana-506015 Telangana India
2)M. Anil Kumar, Assistant Professor/Department of Mechanical Engineering, Kakatiya Institute of Technology and Science
3)Dr. S. Rajyalakshmi,Assistant Professor/ Department of physics, UCST Adikavi Nannaya University
4)Dr. Sadhana Katlakunta,Assistant Professor/Department of Physics, University College of Science
(72)**Name of Inventor :**
1)N. Maramu, Assistant Professor/Department of Physics, Kakatiya Institute of Technology and Science
2)M. Anil Kumar, Assistant Professor/Department of Mechanical Engineering, Kakatiya Institute of Technology and Science
3)Dr. S. Rajyalakshmi,Assistant Professor/ Department of physics, UCST Adikavi Nannaya University
4)Dr. Sadhana Katlakunta,Assistant Professor/Department of Physics, University College of Science

(57) Abstract :
Abstract Copper-doped M-type strontium hexaferrite particles of composition SrCuxFe12-xO19 (x = 0.0 to 1.0) through co-precipitation were synthesized. The structure of a crystal, morphology, microwave absorption, and magnetic properties of the materials were investigated in detail with Cu concentration. X-ray patterns indicated a single M-type phase for hexaferrites with x=0.6, while impurity phase in addition to M-type phase has been observed with x>0.6. The obtained results have been explained based on composition, magnetic exchange interaction, and microwave phenomena.

No. of Pages : 20 No. of Claims : 6

(12) PATENT APPLICATION PUBLICATION
(19) INDIA
(22) Date of filing of Application :15/05/2021
(21) Application No.202141021932 A
(43) Publication Date : 11/06/2021

(54) Title of the invention : A LOW COST AUTO TRACKING SOLAR PANEL CELL PHONE CHARGER

(51) International classification	:F24S0030000000, H04L0012400000, B61L0027000000, G08G0001133000, H04B0010110000
(31) Priority Document No	:NA
(32) Priority Date	:NA
(33) Name of priority country	:NA
(86) International Application No	:NA
Filing Date	:NA
(87) International Publication No	: NA
(61) Patent of Addition to Application Number	:NA
Filing Date	:NA
(62) Divisional to Application Number	:NA
Filing Date	:NA

(71)**Name of Applicant :**
1)Dr. GEETHA RAMADAS
Address of Applicant :PROFESSOR, DEPARTMENT OF ELECTRICAL & ELECTRONICS ENGINEERING, R.M.K. ENGINEERING COLLEGE, R.S.M. NAGAR, KAVARAIPETTAI TIRUVALLUR DISTRICT, TAMIL NADU PIN:601206 Tamil Nadu India
2)Ms. PERARASI M
3)Ms. M.VIMALA
4)Mr. ALEXANDER JEEVANANTHAM
5)Mr. K. NARESH KUMAR
6)Ms. A. JENIFER
7)Ms. SABARI L UMAMAHESWARI
8)Ms. ANNIE ISABELLA L
9)Ms. E. ELAKKIA
10)Ms. CHANDLA ELLIS
(72)**Name of Inventor :**
1)Dr. GEETHA RAMADAS
2)Ms. PERARASI M
3)Ms. M.VIMALA
4)Mr. ALEXANDER JEEVANANTHAM
5)Mr. K. NARESH KUMAR
6)Ms. A. JENIFER
7)Ms. SABARI L UMAMAHESWARI
8)Ms. ANNIE ISABELLA L
9)Ms. E. ELAKKIA
10)Ms. CHANDLA ELLIS

(57) Abstract :
ABSTRACT A LOW COST AUTO TRACKING SOLAR PANEL CELL PHONE CHARGER Presently, the entire globe is shriveled interior into lesser weight smartphones. Despite, we migrate to different locations using a different mode of transport especially, Indians used to highly prefer public transport. During that situation, it is common for all public that there is an up-lift chance of getting battery down in our smartphones. In such time public mostly rely on the common charging points which are available in the bus depot, railway station, train and also in buses. It is evident that the smartphones which are connected to the common charging points are at a higher risk of getting hacked. We still feel that our smartphones are working well after getting power back up. Since data stealers are not injecting any mark of viruses, alternatively, they snip our precious mobile data while using electric lines to charge our phones. In general, the electric boards placed for charging are safer in Public transports such as Railway Stations or bus terminals. Though there are higher chances of some hacker™s tactic those public places and insert some data sucking chips and maintain the circuit board as normal it is for non-identification this hacking process is commonly referred to as JUICE HACKING • common cases in the European and Western countries. To evade this problem taking place in the public localities and also to Aware the public of hacking and electricity conservation we plan this present research investigation. Thus the present invention investigation deals with designing and fabrication of solar panel in build with tracking sensors (Auto Tracking Solar Panel Cell Phone Charger) at economically less cost. Through this, we can educate or the aware public on a novel route to overcome mobile data hacking.

No. of Pages : 23 No. of Claims : 7

(12) PATENT APPLICATION PUBLICATION
(21) Application No.202141021933 A
(19) INDIA
(22) Date of filing of Application :15/05/2021
(43) Publication Date : 11/06/2021

(54) Title of the invention : VIRTUAL REALITY LEARNING AND AMUSEMENT SYSTEM BASED ON ARTIFICIAL INTELLIGENCE (AI) AND IOT

(51) International classification	:H04N0005262000, G09B0005060000, G06T0003400000, G06N0020000000, G06N0003063000
(31) Priority Document No	:NA
(32) Priority Date	:NA
(33) Name of priority country	:NA
(86) International Application No	:NA
Filing Date	:NA
(87) International Publication No	: NA
(61) Patent of Addition to Application Number	:NA
Filing Date	:NA
(62) Divisional to Application Number	:NA
Filing Date	:NA

(71)**Name of Applicant :**
1)ADITYA ENGINEERING COLLEGE, Surampalem
Address of Applicant :Aditya Nagar, ADB Road, Surampalem, East Godavari District, Andhra Pradesh, India. Pin: 533437 Andhra Pradesh India
(72)**Name of Inventor :**
1)Dr. Sripada Rama Sree
2)Mrs. A. Vanathi
3)Mr. S N S V S C Ramesh
4)Mr. V. Andiran

(57) Abstract :
ABSTRACT VIRTUAL REALITY LEARNING AND AMUSEMENT SYSTEM BASED ON ARTIFICIAL INTELLIGENCE (AI) AND IOT Aspects of present disclosure relate to system that uses virtual reality to realize various learning and amusement space themes. The system includes main server (001), clients (006), centralized control and play unit (002), communication network unit (003), an environment sensing module (004), a stereo projection unit with panoramic immersion (005). The present invention provides integration of multiple functionalities which realizes cinematic panorama mode, a memory enrichment study room mode and thereby significantly reduces software and hardware implementation costs, obtains more usable solutions at the same time, combines several features in the same mode application, and increases user immersion satisfaction and time consumption performance, improves software and hardware utilisation speed, and lowers the cost of virtual reality industrialization. Figure 1 shall be reference figure.

No. of Pages : 21 No. of Claims : 8

(12) PATENT APPLICATION PUBLICATION
(21) Application No.202141021964 A
(19) INDIA
(22) Date of filing of Application :15/05/2021
(43) Publication Date : 11/06/2021

(54) Title of the invention : AN IOT BASED NECKLACE FOR VISUALLY IMPAIRED PERSONS TO PROTECT JEWELLERY FROM KIDNAPPERS AND THIEVES

(51) International classification	:A61H0003060000, G09B0021000000, G08B0021020000, A61F0009080000, A61B0005000000
(31) Priority Document No	:NA
(32) Priority Date	:NA
(33) Name of priority country	:NA
(86) International Application No	:NA
Filing Date	:NA
(87) International Publication No	: NA
(61) Patent of Addition to Application Number	:NA
Filing Date	:NA
(62) Divisional to Application Number	:NA
Filing Date	:NA

(71)**Name of Applicant :**
1)Mr. T. SANDEEP
Address of Applicant :Assistant Professor, Department of Information Technology, Stanley College of Engineering and Technology for Women, Chapel Road, Abids, Hyderabad- 500 001, Telangana. E-Mail: tsandeep@stanley.edu.in Telangana India
2)Dr. A. KANAKA DURGA
3)Mrs. AFREEN FATIMA MOHAMMED
4)Mrs. K. NAGAMANI
5)Mrs. T. C. SWETHA PRIYA
6)Dr. M. SATHYA
7)Dr. R. CHITHRA
8)Dr. R. DELSHI HOWSALAYA DEVI
9)N S SIVAKUMAR
10)N. NAGARAJAN
(72)**Name of Inventor :**
1)Mr. T. SANDEEP
2)Dr. A. KANAKA DURGA
3)Mrs. AFREEN FATIMA MOHAMMED
4)Mrs. K. NAGAMANI
5)Mrs. T. C. SWETHA PRIYA
6)Dr. M. SATHYA
7)Dr. R. CHITHRA
8)Dr. R. DELSHI HOWSALAYA DEVI
9)N S SIVAKUMAR
10)N. NAGARAJAN

(57) Abstract :
ABSTRACT OF THE INVENTION People who are blind have a tough time navigating the world. Walking from one location to another becomes difficult and, in some cases, risky. Visual impairment is a decrease in the ability to see to a certain degree that causes problems not fixable by usual means, such as glasses. • Blindness is described as the inability to see as a result of an injury, disease, or genetic condition. Being visually impaired or blind does not exclude people from leading normal lives. Snatching jewelry and abduction are two major challenges that visually impaired people face both indoors and outdoors. This invention is a smart necklace that protects visually impaired people, especially women, from kidnappers and jewelry thievery. This innovation includes sensors such as door sensors, ultrasonic proximity sensors for detecting human presence, and PIR sensors for detecting motion of IR light-emitting sources (typically human bodies), visual sensors capable of detecting human forms, Ambient light sensors sense the presence of light in the surrounding world. The user's voice is correctly recognized by a voice sensor. a buzzer for alarm sounding, picture capture module for capturing one or more photographs of a blind person's immediate surroundings, GSM modules to send text messages to relatives with the blind's current location via GPS sensor, ESP8266 to link and communicate via the Internet, and Raspberry Pi. Although an infrared sensor may be sufficient to detect people entering and leaving, visual sensors may be used to determine whether or not anyone is in front of the computer screen, especially in front of blind people. When a visually impaired or blind person wears an IOT based necklace and is kidnapped or has their jewelry stolen, a buzzer sends an alarm to their family or guardians based on their voice recorded by a voice sensor. Visually impaired and blind people can thus protect their lives and their belongings from kidnappers and jewel snatchers by using this invention.

No. of Pages : 12 No. of Claims : 2

(12) PATENT APPLICATION PUBLICATION
(21) Application No.202141021974 A
(19) INDIA
(22) Date of filing of Application :16/05/2021
(43) Publication Date : 11/06/2021

(54) Title of the invention : A NOVEL WATERMARKING TECHNIQUES FOR 3D MESH OBJECTS

(51) International classification	:G06T0001000000, H04N0001320000, H04N0021835800, H04W0012100000, H04L0029060000
(31) Priority Document No	:NA
(32) Priority Date	:NA
(33) Name of priority country	:NA
(86) International Application No	:PCT//
Filing Date	:01/01/1900
(87) International Publication No	: NA
(61) Patent of Addition to Application Number	:NA
Filing Date	:NA
(62) Divisional to Application Number	:NA
Filing Date	:NA

(71)**Name of Applicant :**
1)Dr. Shubhangi Digamber Chikte
Address of Applicant :Professor, Department of computer science and Engineering, Visvesvaraya Technological university(VTU), center for PG studies, KALABURAGI-585105, Karnataka, India. E-Mail: shubhangidc@vtu.ac.in +91-9448716838 Karnataka India
2)Manikamma Malipatil
(72)**Name of Inventor :**
1)Dr. Shubhangi Digamber Chikte
2)Manikamma Malipatil

(57) Abstract :
A novel watermarking techniques for 3D mesh objects Abstract Our Invention novel watermarking techniques for 3D mesh objects is a watermark from an encoded image opens the possibility of various novel applications and also a Several such applications are detailed. The invention is to an employs a reversible watermark in conjunction with a second (robust) watermark and the arrangement, the payload of the reversible watermark conveys data about the robust watermark (e.g., encoding parameters, or an error signal), permitting removal of the robust watermark from an uncorrupted encoded image. The invented technology is also a encoded image can be fully restored to its pristine, uuencoded state even if several different watermarks have been applied and the invention relates to a method of integrity protection of a three-dimensional model, which is characterized in that the method is divided into two steps of embedding watermark and verifying watermark: (1) a vertex for embedding watermark is chosen, and the watermark vertex and the neighboring vertex is led to distribute the whole module as far as possible. (2) a coordinate X1 of each vertex is adjusted, and whether the vertex is a watermark vertex is identified. (3) for each watermark vertex, wi is embedded into x2, and h(wi) is embedded to x3.

No. of Pages : 15 No. of Claims : 7

(12) PATENT APPLICATION PUBLICATION
(21) Application No.202141021977 A
(19) INDIA
(22) Date of filing of Application :16/05/2021
(43) Publication Date : 11/06/2021

(54) Title of the invention : A SYSTEM FOR MONITORING IMPACT OF SACRED CHANTS ON PLANTS AND TREES THROUGH EMW RADIATIONS

(51) International classification	:H04L0012240000, H04B0017210000, G06F0016600000, G06F0016638000, G10H0001000000
(31) Priority Document No	:NA
(32) Priority Date	:NA
(33) Name of priority country	:NA
(86) International Application No	:NA
Filing Date	:NA
(87) International Publication No	: NA
(61) Patent of Addition to Application Number	:NA
Filing Date	:NA
(62) Divisional to Application Number	:NA
Filing Date	:NA

(71)**Name of Applicant :**
1)Dr.S.Thenappan
Address of Applicant :Professor of ECE, Department of ECE, KNS Institute of Technology, Bengaluru, Karnataka, India. Pin Code:560064 Karnataka India
2)Mr.N.Manoj Kumar
3)Dr.S.Anantha Padmanabhan
4)Dr.K.Senthil Babu
5)Dr. Pradeep Kumar N.S
6)Dr.S.Mani Naidu
7)Mr.Sukumar B.S
8)Dr.R.Bhargava Rama Gowd
(72)**Name of Inventor :**
1)Dr.S.Thenappan
2)Mr.N.Manoj Kumar
3)Dr.S.Anantha Padmanabhan
4)Dr.K.Senthil Babu
5)Dr. Pradeep Kumar N.S
6)Dr.S.Mani Naidu
7)Mr.Sukumar B.S
8)Dr.R.Bhargava Rama Gowd

(57) Abstract :
ABSTRACT A SYSTEM FOR MONITORING IMPACT OF SACRED CHANTS ON PLANTS AND TREES THROUGH EMW RADIATIONS [031] This invention provides a system for monitoring impact of sacred chants on plants and trees through Electromagnetic waves (EMW) radiations. The system includes, but not limited to, a plurality of audio devices for producing sacred chants such as Slokas, Mantras, Duas and Music in the form of Audio; a converting unit designed to convert audios (Mantras, Slokas, Duas and Music) into Electromagnetic waves (EMW), by using an antenna; a processing unit to receive input from the audio devices and antenna, which is further processed and analysed with different antenna parameters, accordingly. Further, the audio is simulated with a user interface or software to determine different antenna parameters provided on a computing device. In addition, the user interface is configured to view and further analysing different antenna parameters. Accompanying drawing [FIGS. 1-4]

No. of Pages : 18 No. of Claims : 8

(12) PATENT APPLICATION PUBLICATION
(19) INDIA
(22) Date of filing of Application :17/05/2021
(21) Application No.202141021986 A
(43) Publication Date : 11/06/2021

(54) Title of the invention : HYBRID MECHANICAL JUICER MIXER GRINDER

(51) International classification	:A47J0019020000, A47J0019060000, G05D0001000000, A47J0043070000, F16K0031050000
(31) Priority Document No	:NA
(32) Priority Date	:NA
(33) Name of priority country	:NA
(86) International Application No	:NA
Filing Date	:NA
(87) International Publication No	: NA
(61) Patent of Addition to Application Number	:NA
Filing Date	:NA
(62) Divisional to Application Number	:NA
Filing Date	:NA

(71)**Name of Applicant :**
1)Dr. Dareddy Ramana Reddy
Address of Applicant :Department of Mechanical Engineering, St. Martin's Engineering College, Sy. No.98, Dulapally Road, Dhulapally, Near Kompally, Secunderabad, Telangana-500100, India. Telangana India
(72)**Name of Inventor :**
1)Dr. Dareddy Ramana Reddy

(57) Abstract :
ABSTRACT: Title: Hybrid Mechanical Juicer Mixer Grinder The present disclosure proposes a Hybrid Juicer Mixer Grinder that can be utilized either in manual mode or in automatic mode based on necessity. The proposed hybrid juicer is integrated with power drive, manual drive, a spindle and a juicer that saves electricity and aids the user to make juices even when power supply is not present. Further the hybrid juicer is configured with a lever that enables switching between automatic mood and manual mode with ease. The hybrid juicer mixer grinder is equally useful for rural as well as urban areas.

No. of Pages : 9 No. of Claims : 10

(12) PATENT APPLICATION PUBLICATION
(19) INDIA
(22) Date of filing of Application :17/05/2021
(21) Application No.202141021987 A
(43) Publication Date : 11/06/2021

(54) Title of the invention : HIGH SPEED OPPOSITE PISTON ENGINE WITH DOUBLE CRANKS

(51) International classification	:F02B0053000000, F02B0075320000, F02B0075280000, F02B0053040000, F02B0071000000
(31) Priority Document No	:NA
(32) Priority Date	:NA
(33) Name of priority country	:NA
(86) International Application No	:NA
Filing Date	:NA
(87) International Publication No	: NA
(61) Patent of Addition to Application Number	:NA
Filing Date	:NA
(62) Divisional to Application Number	:NA
Filing Date	:NA

(71)**Name of Applicant :**
1)Dr. Dareddy Ramana Reddy
Address of Applicant :Department of Mechanical Engineering, St. Martin's Engineering College, Sy. No.98, Dulapally Road, Dhulapally, Near Kompally, Secunderabad, Telangana-500100, India. Telangana India
(72)**Name of Inventor :**
1)Dr. Dareddy Ramana Reddy

(57) Abstract :
ABSTRACT: Title: High speed opposite piston engine with double cranks The present disclosure proposes a high speed opposite piston engine with double cranks. The proposed engine utilizes planetary gear train to drive the flywheel at high speed which reduces size of flywheels. The proposed engine is an economical alternative to the conventional multi cylinder engines of the same power capacity. The opposite piston engine provides better brake thermal efficiency than conventional multi cylinder engine of the same capacity and hence provides better fuel economy. Further, the proposed engine reduces idle speed thereby reducing the frictional power loss during idle speed.

No. of Pages : 17 No. of Claims : 5

(12) PATENT APPLICATION PUBLICATION
(21) Application No.202141021988 A
(19) INDIA
(22) Date of filing of Application :17/05/2021
(43) Publication Date : 11/06/2021

(54) Title of the invention : VARIABLE VOLUME ROTARY APPARATUS

(51) International classification	:F02B0053000000, F04C0002260000, F01C0001200000, F02B0075320000, F01C0001000000
(31) Priority Document No	:NA
(32) Priority Date	:NA
(33) Name of priority country	:NA
(86) International Application No	:NA
Filing Date	:NA
(87) International Publication No	: NA
(61) Patent of Addition to Application Number	:NA
Filing Date	:NA
(62) Divisional to Application Number	:NA
Filing Date	:NA

(71)**Name of Applicant :**
1)Dr. Dareddy Ramana Reddy
Address of Applicant :Department of Mechanical Engineering, St. Martin's Engineering College, Sy. No.98, Dulapally Road, Dhulapally, Near Kompally, Secunderabad, Telangana-500100, India. Telangana India
(72)**Name of Inventor :**
1)Dr. Dareddy Ramana Reddy

(57) Abstract :
ABSTRACT: Title: Variable Volume Rotary Apparatus The present disclosure proposes a variable volume rotary apparatus that has two rotary discs, and a rotary eye placed in the central hole of cap. The variable volume apparatus aids to combine the better performance characteristics of reciprocating system with those of centrifugal system. The proposed apparatus functions either as a pump or a compressor or a turbine or a rotary internal combustion engine. The proposed apparatus eliminates the need for a clutch when placed in the axle of wheel between the two forks. The apparatus aids to conserve most of the kinetic energy for a short while which is generally lost generally during frequent break applications.

No. of Pages : 25 No. of Claims : 2

(12) PATENT APPLICATION PUBLICATION
(21) Application No.202141021989 A
(19) INDIA
(22) Date of filing of Application :17/05/2021
(43) Publication Date : 11/06/2021

(54) Title of the invention : VEHICLE WITH MULTI ENGINE ASSEMBLY

(51) International classification	:F02B0073000000, B60K0005080000, B60W0030180000, B62D0021150000, F16H0001220000
(31) Priority Document No	:NA
(32) Priority Date	:NA
(33) Name of priority country	:NA
(86) International Application No	:NA
Filing Date	:NA
(87) International Publication No	: NA
(61) Patent of Addition to Application Number	:NA
Filing Date	:NA
(62) Divisional to Application Number	:NA
Filing Date	:NA

(71)**Name of Applicant :**
1)Dr. Dareddy Ramana Reddy
Address of Applicant :Department of Mechanical Engineering, St. Martin's Engineering College, Sy. No.98, Dulapally Road, Dhulapally, Near Kompally, Secunderabad, Telangana-500100, India. Telangana India
(72)**Name of Inventor :**
1)Dr. Dareddy Ramana Reddy

(57) Abstract :
ABSTRACT: Title: Vehicle with Multi Engine Assembly The present disclosure proposes an vehicle with multi engine assembly. The is configured with two engines mounted side by side on a frame, and output shafts are coupled to each other. The present invention makes the vehicle cheaper than other hybrid vehicles with same improvement in fuel efficiency. The proposed multi-engine assembly concept provides standby when one engine fails due to any reason. The proposed vehicle provides facility to run the vehicle engine at high load in all driving conditions thereby the increasing the fuel efficiency. Further the vehicle aids to reduce frictional losses since efficiency of engine is high at high loads.

No. of Pages : 13 No. of Claims : 7

(12) PATENT APPLICATION PUBLICATION
(21) Application No.202141021990 A
(19) INDIA
(22) Date of filing of Application :17/05/2021
(43) Publication Date : 11/06/2021

(54) Title of the invention : DESIGN AND ANALYSIS OF OCTAHEDRON DIELECTRIC RESONATOR ANTENNA FOR S-BAND WIRELESS APPLICATIONS

(51) International classification	:H01Q0009040000, C04B0035622000, H01Q0019060000, H01Q0015140000, H01Q0015080000
(31) Priority Document No	:NA
(32) Priority Date	:NA
(33) Name of priority country	:NA
(86) International Application No	:NA
Filing Date	:NA
(87) International Publication No	: NA
(61) Patent of Addition to Application Number	:NA
Filing Date	:NA
(62) Divisional to Application Number	:NA
Filing Date	:NA

(71)**Name of Applicant :**
1)Gundre Mohith Reddy
Address of Applicant :School of ECE, REVA University Rukmini Knowledge Park, Kattigenahalli, Yelahanka, Bengaluru, Karnataka 560064 Karnataka India
2)Bellam Sai Deepak
3)Kullayappa Manjunath Gari Shyamprasad
4)Muppala Yeswanth Varma
5)Sowmiya Bharani
6)Subhash B K
(72)**Name of Inventor :**
1)Gundre Mohith Reddy
2)Bellam Sai Deepak
3)Kullayappa Manjunath Gari Shyamprasad
4)Muppala Yeswanth Varma
5)Sowmiya Bharani
6)Subhash B K

(57) Abstract :
The proposed Octahedron design measures a Wide Band incorporated Dielectric Resonator Antenna for S band application. The proposed design is a 3-Dimensional Octahedron shaped Dielectric Resonating Antenna. DRA is energized by utilizing molded gap. The recreation measure is finished with the assistance of CST Studio suite software. The transmitting structure is works for wideband operation between 2.1GHz to 4.1GHz. The transmission bandwidth is 2GHz and 2.7dB, 3.4dB and 4.6dB of gain observed by the proposed antenna at resonances 2.3GHz, 2.9GHz and 3.7GHz respectively and the Impedance value of the design is 49.8Ohms. The proposed Octahedron Dielectric Resonating radiator has good gain, efficiency, and stable radiation pattern and appropriate for S band application.

No. of Pages : 8 No. of Claims : 2

(12) PATENT APPLICATION PUBLICATION
(19) INDIA
(22) Date of filing of Application :17/05/2021
(21) Application No.202141022036 A
(43) Publication Date : 11/06/2021

(54) Title of the invention : DEVELOPMENT OF A SCREENING TOOL FOR SLEEP APNEA FOR EXPERTS IN CLINICAL SETUPS

(51) International classification	:A61B0005000000, A61F0005560000, A61B0005145500, A61B0007000000, A61B0005080000
(31) Priority Document No	:NA
(32) Priority Date	:NA
(33) Name of priority country	:NA
(86) International Application No	:NA
Filing Date	:NA
(87) International Publication No	: NA
(61) Patent of Addition to Application Number	:NA
Filing Date	:NA
(62) Divisional to Application Number	:NA
Filing Date	:NA

(71)**Name of Applicant :**
1)Dr.Poornima G Patil
Address of Applicant :Designation: Assistant Professor Dept of CSE, Visvesvaraya Technological University Belagavi Karnataka 590018 India poornima_g_patil@yahoo.com 9448866425 Karnataka India
2)Dr. Jyoti Bali
3)Gireesha H M
4)Prabhavathi C. Nissimagoudar
5)Dr. S. R. Nirmala
6)Dr.Suvarna G Kanakaraddi
7)Rajeshri Rahul Itkarkar
8)Dr. Karuna C. Gull
9)Prof. Jaya Pattanshetti
10)Dr. Piyush Kumar Pareek
(72)**Name of Inventor :**
1)Dr.Poornima G Patil
2)Dr. Jyoti Bali
3)Gireesha H M
4)Prabhavathi C. Nissimagoudar
5)Dr. S. R. Nirmala
6)Dr.Suvarna G Kanakaraddi
7)Rajeshri Rahul Itkarkar
8)Dr. Karuna C. Gull
9)Prof. Jaya Pattanshetti
10)Dr. Piyush Kumar Pareek

(57) Abstract :
TITLE OF INVENTION: Development of a Screening tool for Sleep Apnea for experts in clinical setups FIELD OF INVENTION: COMPUTER SCIENCE ABSTRACT Sleep apnea is a type of breathing disorder caused by interruptions in breathing or shallow breathing during night sleep. The disorder can occur in three different forms namely, Obstructive Sleep apnea (OSA), Central Sleep apnea (CSA) and Mixed Sleep apnea (MSA) among which OSA is the most prevalent. In all these three forms of sleep apnea, the interrupted breathing activity leads to the problem of oxygen deficiency leading to the development of chronic cardiac related ailments. Hence an earlier detection of sleep apnea can save patient from life risk. The Invention discloses a low-power, highperformance algorithm for sleep apnea detection based on ECG signal.

No. of Pages : 16 No. of Claims : 1

(12) PATENT APPLICATION PUBLICATION
(19) INDIA
(22) Date of filing of Application :17/05/2021
(21) Application No.202141022070 A
(43) Publication Date : 11/06/2021

(54) Title of the invention : SMART AGRICULTURE CHANGEOVER BOX

(51) International classification	:G06Q0050020000, H02P0005460000, A01G0025160000, A01M0009000000, H02K0017300000
(31) Priority Document No	:NA
(32) Priority Date	:NA
(33) Name of priority country	:NA
(86) International Application No	:NA
Filing Date	:NA
(87) International Publication No	: NA
(61) Patent of Addition to Application Number	:NA
Filing Date	:NA
(62) Divisional to Application Number	:NA
Filing Date	:NA

(71)**Name of Applicant :**
1)BALASUBRAMANIYAM S
Address of Applicant :UG Student, Department of EEE, Bannari Amman Institute of Technology, Sathyamangalam, Erode 638401 Tamil Nadu India
2)SANGEETHKUMAR C
3)SANJAY P
4)PATTILINGAM V
5)NAVEENKUMAR S
6)NAVEEN N
7)KAMATCHI KANNAN VIJAYARANGAN
8)MAHESWARI KARATTADIPALAYAM THANGAVEL
9)VEERAKUMAR SUBRAMANIAN
(72)**Name of Inventor :**
1)BALASUBRAMANIYAM S
2)SANGEETHKUMAR C
3)SANJAY P
4)PATTILINGAM V
5)NAVEENKUMAR S
6)NAVEEN N
7)KAMATCHI KANNAN VIJAYARANGAN
8)MAHESWARI KARATTADIPALAYAM THANGAVEL
9)VEERAKUMAR SUBRAMANIAN

(57) Abstract :
India is a land of agriculture in which Indian farmers plays a vital role. Nowadays, farmers utilize the changeover box manually to control the On/Off of their inductions motor which is located at agricultural field. The farmers can run one induction motor at a time probably if they are single service provider. The manually operated present changeover box has some drawbacks such as it needs the farmer/user to be physically present to turn on/off their induction motors and also has to continuously monitor the inductions motor which helps to pump water to the agricultural fields. The farmer needs to physically change the lever of the changeover box to switch the supply to operate more than one induction motors, this consumes much time for the farmers and also it is difficult for the farmers who are old. Hence, the proposed system remotely controls the lever of the changeover box using the farmer/user smartphone from anywhere through internet. The proposed system involves a DC motor to control the switching action of the changeover box which is connected through NodeMCU ESP8266 and motor driver. This setup helps the farmer to turn on/off the induction motors remotely, to determine which induction motor need to run and also the condition of fuse etc from anywhere using a mobile app over internet connection.

No. of Pages : 10 No. of Claims : 8

(12) PATENT APPLICATION PUBLICATION
(21) Application No.202141022112 A
(19) INDIA
(22) Date of filing of Application :17/05/2021
(43) Publication Date : 11/06/2021

(54) Title of the invention : SYSTEM AND METHOD FOR CONNECTING A SERVICE PROVIDER AND A SERVICE SEEKER FOR A SERVICE

(51) International classification	:G06Q0010080000, G08G0001000000, H04L0029080000, G06Q0010020000, G06F0009500000
(31) Priority Document No	:NA
(32) Priority Date	:NA
(33) Name of priority country	:NA
(86) International Application No	:NA
Filing Date	:NA
(87) International Publication No	: NA
(61) Patent of Addition to Application Number	:NA
Filing Date	:NA
(62) Divisional to Application Number	:NA
Filing Date	:NA

(71)**Name of Applicant :**
1)ONTIPALLI VENKATA HARIKA
Address of Applicant :FLAT NO: 202, DOOR NO: 16-1-4, PRANAV ENCLAVE, SRIRAMNAGAR, RAJAMAHENDRAVARAM, 533105, ANDHRA PRADESH, INDIA Andhra Pradesh India
(72)**Name of Inventor :**
1)ONTIPALLI VENKATA HARIKA

(57) Abstract :
A system (100) for connecting a service provider and a service seeker is disclosed. A service request receiving module (110) receives one or more service delivery requests from the service seeker. A service provider searching module (120) fetches prestored registration information associated with one or more service providers available in proximity to the first geographical location from a service provider repository, searches the one or more service providers corresponding to the service seeker. A service provider selection module (130) selects a service provider from the one or more service providers. A request finalization module (140) determines a category of an item from the one or more service delivery requests, recommends a type of packaging corresponding to the category of the item assigned for the delivery. A route optimization module (140) optimizes a delivery route for the service provider for accomplishment of the service delivery request associated with the item. FIG. 1

No. of Pages : 28 No. of Claims : 10

(12) PATENT APPLICATION PUBLICATION
(21) Application No.202141022119 A
(19) INDIA
(22) Date of filing of Application :17/05/2021
(43) Publication Date : 11/06/2021

(54) Title of the invention : SOILLESS AGRICULTUTRAL MONITORING AND CONTROLLING BASED ON IOT

(51) International classification	:G06Q0050020000, A01G0025160000, G01D0021020000, H04L0029080000, A01B0079000000
(31) Priority Document No	:NA
(32) Priority Date	:NA
(33) Name of priority country	:NA
(86) International Application No	:NA
Filing Date	:NA
(87) International Publication No	: NA
(61) Patent of Addition to Application Number	:NA
Filing Date	:NA
(62) Divisional to Application Number	:NA
Filing Date	:NA

(71)**Name of Applicant :**
1)Dr.M. Sudha
Address of Applicant :Assistant Professor Department of Electronic and Communication Engineering Srinivasa Ramanujan Centre SASTRA Deemed to be University Kumbakonam Tamil Nadu India
2)Dr.A.Meenakshi
3)Anooja Ali
4)A.Ajil
5)Dr. L.Arun Raj
6)Dr V P Gladis Pushparathi
(72)**Name of Inventor :**
1)Dr.M. Sudha
2)Dr.A.Meenakshi
3)Anooja Ali
4)A.Ajil
5)Dr. L.Arun Raj
6)Dr V P Gladis Pushparathi

(57) Abstract :
IoT-based smart farming makes it possible for farmers and farmers to reduce waste and increase productivity ranging from quantities of fertilizer to the number of traveling operations by agricultural vehicles and to efficiently utilize resources such as water, power, etc. IoT intelligent farmer solutions are a system designed with sensors (light, humidity, temperature, soil humidity, crop health, etc.) and the automation of irrigation systems for monitoring the crop field.The prediction of crop yield is extremely difficult due to its reliance on many factors including crop genotype, environmental conditions, management techniques and their interfaces. The information collected by farm sensors is used to forecast the production rate of the crop artificial network. This information contains parameters such as soil, temperature, pressure, precipitation and moisture. Precise yield prediction requires a basic overview of the key relationship between yield and those interacting factors and requires both detailed datasets and efficient algorithms to demonstrate that relationship. A machine learning environment based on environmental data is proposed using IoT for crop yield prediction. To collect such data, a wireless sensor network is set up and retrospectively uploaded to the cloud. We also rendered feature selection based on a trained machine learning model, which enhanced prediction accuracy successfully.Farmers can obtain precise soil information either via the dashboard or via a custom mobile app. Our calculative results showed that the model surpassed other common machine learning approaches significantly.

No. of Pages : 13 No. of Claims : 6

(12) PATENT APPLICATION PUBLICATION
(21) Application No.202141022163 A
(19) INDIA
(22) Date of filing of Application :17/05/2021
(43) Publication Date : 11/06/2021

(54) Title of the invention : A POWER QUALITY AND DEMAND SIDE MANAGEMENT SYSTEM FOR A SMART GRID USING MACHINE LEARNING FOR PROVIDING EFFICIENT RESOURCE UTILIZATION AND THE METHOD THEREOF

(51) International classification	:G06Q0050060000, H02J0013000000, G06Q0010060000, G06N0020000000, G06Q0010040000
(31) Priority Document No	:NA
(32) Priority Date	:NA
(33) Name of priority country	:NA
(86) International Application No	:NA
Filing Date	:NA
(87) International Publication No	: NA
(61) Patent of Addition to Application Number	:NA
Filing Date	:NA
(62) Divisional to Application Number	:NA
Filing Date	:NA

(71)**Name of Applicant :**
1)Dr. Mallikarjunaswamy S
Address of Applicant :JSS Academy of Technical Education, JSSATE-B, Campus, Dr.Vishnuvardhan Road, Srinivaspura-Post, Bengaluru 560 060, Karnataka, India Karnataka India
2)Dr. Siddesh G K
(72)**Name of Inventor :**
1)S, Mallikarjunaswamy
2)G K Siddesh
3)N Sharmila
4)M Komala
5)H N, Mahendra
6)D, Prakyath
7)D, Mahesh Kumar
8)K, Sathisha Shet
9)N Mahesh Kumar
10)S Pooja
11)M L, Umashankar
12)V, Rekha
13)K, Shashiraj

(57) Abstract :
Abstract: Title: A Power quality and demand side management System for a smart grid Using Machine Learning for providing efficient resource utilization and the method thereof Electricity plays a crucial role in different sectors of the nation including national security, economy, agriculture and healthcare. The design of the power system has been revolutionized by the incorporation of communication technology. This makes the grid smart. Several issues have been addressed in order to make the utility grid smart. In this work, an enhanced algorithm for Power Quality and demand side management (PQDSM) has been proposed using the machine learning for a smart grid. The proposed algorithm ensures sufficient usage of the energy depending on the priorities allocated in the grid. To effectively control the intrusions into the smart grid, a reconfigurable model has been proposed. The recent agent helps in identifying the dishonest entities by making use of the machine learning classifier. The energy utilization can be made optimal by having the accurate information about the energy using the advanced Energy Management along with the interface controlling agents. The proposed scheme has been tested using an efficient simulation tool. From the evaluation, the results revealed that the proposed power quality and demand side management scheme is less vulnerable to any dishonest entity intrusion and optimizes the power utilization in the smart grid. Figure 1

No. of Pages : 27 No. of Claims : 10

(12) PATENT APPLICATION PUBLICATION
(21) Application No.202141022167 A
(19) INDIA
(22) Date of filing of Application :18/05/2021
(43) Publication Date : 11/06/2021

(54) Title of the invention : A NOVEL APPROACH TO IDENTIFY THE FACIAL PARTS USING LOCAL BINARY PATTERN AND COMBINED LVQ CLASSIFIERS

(51) International classification	:G06K0009000000, G06K0009620000, G06K0009460000, G06K0009660000, G06N0020100000
(31) Priority Document No	:NA
(32) Priority Date	:NA
(33) Name of priority country	:NA
(86) International Application No	:NA
Filing Date	:NA
(87) International Publication No	: NA
(61) Patent of Addition to Application Number	:NA
Filing Date	:NA
(62) Divisional to Application Number	:NA
Filing Date	:NA

(71)**Name of Applicant :**
1)Adulapuram Pradeep, Asst professor/ Department of CSE, TKR College of Engineering and Technology
Address of Applicant :TKR College of Engineering and Technology, Saroor Nagar,Rangareddy, Hyderabad, Telangana-500097 Telangana India
2)G. Keerthi, Research Scholar /Department of CSE, SRM Institute of Science and Technology
3)Bathini. Sangeetha, Assistant Professor(c) / Department of CSE, JNTUH College of Engineering Sulthanpur
4)Er. Sandeep Ravikanti, Asst professor/ Department of CSE, Methodist College of Engineering & Technology
5)Deva Rajashekar, Asst professor/ Department of CSE, Methodist College of Engineering & Technology
6)Lingala Thirupathi, Research Scholor/ Department of CSE, Gitam Institute of Technology, Gitam (Deemed to be University).
(72)**Name of Inventor :**
1)Adulapuram Pradeep, Asst professor/ Department of CSE, TKR College of Engineering and Technology
2)G. Keerthi, Research Scholar /Department of CSE, SRM Institute of Science and Technology
3)Bathini. Sangeetha, Assistant Professor(c) / Department of CSE, JNTUH College of Engineering Sulthanpur
4)Er. Sandeep Ravikanti, Asst professor/ Department of CSE, Methodist College of Engineering & Technology
5)Deva Rajashekar, Asst professor/ Department of CSE, Methodist College of Engineering & Technology
6)Lingala Thirupathi, Research Scholor/ Department of CSE, Gitam Institute of Technology, Gitam (Deemed to be University).

(57) Abstract :
Abstract Security is place a major role in current industry. Authentication of the person is very important in the real world to access the information. One of the best methods is Face recognition which is used for human identification and verification. This biometric method has a unique feature from recognizing one person to another in security field. We propose an algorithm for Face recognition and classification called on Local Binary Pattern (LBP). In static approach, LBP consists of histogram properties for feature extraction. Combined Learning Vector Quantization (LVQ) Classifier is used as Neural Network approach in order to recognize the image form database. The input image is first divided into small regions like eyes, nose, and mouth from which Local Binary Patterns (LBP) histograms are extracted and concatenated into a single feature vector. This input vector is calculated using Euclidian distance to generate the output.

No. of Pages : 14 No. of Claims : 3

(12) PATENT APPLICATION PUBLICATION
(21) Application No.202141022168 A
(19) INDIA
(22) Date of filing of Application :18/05/2021
(43) Publication Date : 11/06/2021

(54) Title of the invention : VIGNA. SP BASED BIOCOMPOSITES AND PROCESS FOR MANUFACTURING THEREOF

(51) International classification	:C08L0023020000, C08L0023100000, C08J0005040000, D21H0011080000, C08L0099000000
(31) Priority Document No	:NA
(32) Priority Date	:NA
(33) Name of priority country	:NA
(86) International Application No	:NA
Filing Date	:NA
(87) International Publication No	: NA
(61) Patent of Addition to Application Number	:NA
Filing Date	:NA
(62) Divisional to Application Number	:NA
Filing Date	:NA

(71)**Name of Applicant :**
1)Yenduva Shanti
Address of Applicant :Research Scholar, Department of Mechanical Engineering, School of Technology, GITAM (Deemed to be University), Hyderabad Telangana India
2)Ambadipudi Satyadevi
(72)**Name of Inventor :**
1)Yenduva Shanti
2)Ambadipudi Satyadevi

(57) Abstract :
7. ABSTRACT The present invention relates to the bio-composite material and its production method are described. The bio-composite exhibits physical stiffness, strength and toughness comparable to conventional natural fibers. filler material such as Vigna mungo peel powder (VM) that comes from agricultural waste. The material is environmentally friendly and results in light load-bearing capacity. The fabrication of mechanical, and thermomechanical characterization of 10 and 15wt% VM filled glass fiber polymer composites in the present invention. Mechanical strength was determined by tensile, flexural, impact, and hardness measurements according to ASTM standards. Thermomechanical characterization was done by determining damping parameters such as storage modulus, loss modulus, tan delta and the glass transition temperature by the DMA test. The present invention demonstrated that 10 wt% filled composites got excellent mechanical and thermomechanical properties with less mechanical loss, and has significant practical applications. Fig. 1

No. of Pages : 25 No. of Claims : 10

(12) PATENT APPLICATION PUBLICATION
(21) Application No.202141022170 A
(19) INDIA
(22) Date of filing of Application :18/05/2021
(43) Publication Date : 11/06/2021

(54) Title of the invention : METHOD, SYSTEM AND DEVICE FOR INTRUSION DETECTION

(51) International classification	:G08B0013196000, G08B0025080000, G06K0009000000, G08B0013190000, G08B0013240000
(31) Priority Document No	:NA
(32) Priority Date	:NA
(33) Name of priority country	:NA
(86) International Application No	:NA
Filing Date	:NA
(87) International Publication No	: NA
(61) Patent of Addition to Application Number	:NA
Filing Date	:NA
(62) Divisional to Application Number	:NA
Filing Date	:NA

(71)**Name of Applicant :**
1)Dr. D Jaya Kumari
Address of Applicant :Dept. of CSE, Sri Vasavi Engineering College (A), Pedatadepalli, Tadepalligudem, Andhra Pradesh - 534101, India Andhra Pradesh India
2)Dr. Rupa Chiramdasu
(72)**Name of Inventor :**
1)Dr. D Jaya Kumari
2)Dr. Rupa Chiramdasu

(57) Abstract :
METHOD, SYSTEM AND DEVICE FOR INTRUSION DETECTION ABSTRACT In one aspect, an intrusion detection system for detecting an intruder comprising, an intrusion detection device, a camera, an external server and a database. The intrusion detection device is capable of monitoring the temperature and detecting a change in temperature values in the vicinity at a specific location caused by the intruder, through one or more sensing elements. The camera is capable of capturing a facial image of the intruder, when the increase in temperature value is found compared to the threshold value. The external server is capable of receiving and processing critical information, wherein the critical information is the change in temperature values and captured image and the database, is capable of storing a critical information and triggering an alert to an owner over a GSM and an email. [FIG. 1]

No. of Pages : 17 No. of Claims : 10

(12) PATENT APPLICATION PUBLICATION
(19) INDIA
(22) Date of filing of Application :18/05/2021
(21) Application No.202141022214 A
(43) Publication Date : 11/06/2021

(54) Title of the invention : MACHINE LEARNING BASED EEG SIGNAL PROCESSING FOR SMART PATIENT MONITORING SYSTEM

(51) International classification	:A61B0005000000, A61B0005047600, A61B0005047800, A61B0005040000, A61B0005048000
(31) Priority Document No	:NA
(32) Priority Date	:NA
(33) Name of priority country	:NA
(86) International Application No	:NA
Filing Date	:NA
(87) International Publication No	: NA
(61) Patent of Addition to Application Number	:NA
Filing Date	:NA
(62) Divisional to Application Number	:NA
Filing Date	:NA

(71)**Name of Applicant :**
1)Dr. Ganesh Kumar R,CHRIST (Deemed to be University)
Address of Applicant :Associate Professor Department of Computer Science and Engineering, School of Engineering and Technology, CHRIST (Deemed to be University) - Bangalore Karnataka India Karnataka India
2)Dr. Madhavi Mallam,PES Institute of Technology and Management
3)Saravanakumar Pichumani,Bannari Amman Institute of Technology
4)Srinivas Nagineni, KG Reddy college of engineering & Technology (JNTU Hyderabad)
5)Madhurika Budaraju,Keshav Memorial Institute of Technology
6)Ramashis Banerjee,National Institute of Technology Silchar
7)Dr.S.K. Manju bargavi,Jain (Deemed-to-be) University
8)Dr. Suresh L,RNS Institute of Technology
9)Rajesh kumar S,Cambridge Institute of Technology
10)Mahesh Kumar A S,PES College of Engineering
11)Kakirala Durga Bhavani,SRMIST
12)Karthikayani.K,SRM Institute of Science and Technology
(72)**Name of Inventor :**
1)Dr. Ganesh Kumar R,CHRIST (Deemed to be University)
2)Dr. Madhavi Mallam,PES Institute of Technology and Management
3)Saravanakumar Pichumani,Bannari Amman Institute of Technology
4)Srinivas Nagineni, KG Reddy college of engineering & Technology (JNTU Hyderabad)
5)Madhurika Budaraju,Keshav Memorial Institute of Technology
6)Ramashis Banerjee,National Institute of Technology Silchar
7)Dr.S.K. Manju bargavi,Jain (Deemed-to-be) University
8)Dr. Suresh L,RNS Institute of Technology
9)Rajesh kumar S,Cambridge Institute of Technology
10)Mahesh Kumar A S,PES College of Engineering
11)Kakirala Durga Bhavani,SRMIST
12)Karthikayani.K,SRM Institute of Science and Technology

(57) Abstract :
In the current pandemic situation, patients with critical diseases are lacking immediate care which would reduce the mortality rate. This invention focuses on continuous monitoring of patient™s EEG signals for occurrence of any seizures in brain signals. This system is designed using machine learning algorithm for resource optimization thereby implemented using VLSI technology. The proposed algorithm provides competitive performance as it requires EEG signals only from front and frontal temporal lobes instead of signals from standard full EEG system. Seizure detection is accurate just by easily mountable headsets of dry electrode without the need of painful through- hair electrodes which is highly uncomfortable and uses adhesive material. Compact VLSI implementation is uploaded on low power FPGA Actel Igloo AGL250 that consumes 110 Watts of dynamic power and required 1237 logical elements, operating at a detection latency of 10.2 seconds provides specificity of 80.2% and sensitivity of detection as 92.6%.

No. of Pages : 11 No. of Claims : 6

(12) PATENT APPLICATION PUBLICATION
(19) INDIA
(22) Date of filing of Application :18/05/2021
(21) Application No.202141022278 A
(43) Publication Date : 11/06/2021

(54) Title of the invention : A SYSTEM, APPARATUS, AND METHOD FOR HARNESSING ENERGY FROM WATER WAVES

(51) International classification	:F03B0013180000, B60G0017015000, H02K0035020000, H02K0007180000, F03G0007080000
(31) Priority Document No	:NA
(32) Priority Date	:NA
(33) Name of priority country	:NA
(86) International Application No	:NA
Filing Date	:NA
(87) International Publication No	: NA
(61) Patent of Addition to Application Number	:NA
Filing Date	:NA
(62) Divisional to Application Number	:NA
Filing Date	:NA

(71)**Name of Applicant :**
1)KLE Technological University
Address of Applicant :KLE Technological University B. V. Bhoomaraddi Campus, Vidyanagar, Hubballi, Karnataka -580031, India Karnataka India
2)DESHPANDE, Aditya Mahabaleshwar
3)SIDDAMAL, Saroja Virupakshappa
(72)**Name of Inventor :**
1)DESHPANDE, Aditya Mahabaleshwar
2)SIDDAMAL, Saroja Virupakshappa

(57) Abstract :
The present invention provides a Wave Energy Recovery System (WERS) (100) and method for recovering energy from water waves. The WERS comprises an energy recovery unit 101, which includes an oscillator mechanism 103 comprising a directional control valve 108 and a double acting cylinder 109, and a linear generator unit 104. The energy recovery unit 101 is integrated to an actuator 102 having a fluid and an actuator piston, wherein the actuator receives the mechanical energy from the waves, which causes the actuator piston to move and converts the fluid in the actuator into a pressurized fluid flow. The pressurized fluid flow passing through the directional control valve 108 enters into the double acting cylinder 109. The double acting cylinder 109 produces high frequency reciprocating linear motion, which is fed to the linear generator unit 104. The linear generator unit 104 converts the kinetic energy to electrical energy.

No. of Pages : 23 No. of Claims : 4

(12) PATENT APPLICATION PUBLICATION
(21) Application No.202141022329 A
(19) INDIA
(22) Date of filing of Application :18/05/2021
(43) Publication Date : 11/06/2021

(54) Title of the invention : SYSTEM AND DESIGN OF SENSOR BASED ELECTRONIC VENTILATOR FOR COVID-19 PATIENTS

(51) International classification :A61M0016000000, A61M0016100000, A61B0005000000, A61M0016160000, A61M0016120000
(31) Priority Document No :NA
(32) Priority Date :NA
(33) Name of priority country :NA
(86) International Application No :NA
Filing Date :NA
(87) International Publication No : NA
(61) Patent of Addition to Application Number :NA
Filing Date :NA
(62) Divisional to Application Number :NA
Filing Date :NA

(71)**Name of Applicant :**
1)Dr. Rajkumar Narayanan
Address of Applicant :Assistant Professor, Department of Computer Science, St. Claret College, Jalahalli - 560013, Bengaluru, Karnataka, India Karnataka India
2)Zafrul Hasan
3)Sanjaya Kumar Sarangi
4)Rasmita Lenka
5)Radhika S Patil
6)Shwetha G
7)Vaishnavi Ajay Inamdar
8)Shryavani K
9)Dr. V. Tamizhazhagan
10)Vivek Veeraiah
11)Dr. Md. Khaja Mohiddin
12)Dr.S.Balamurugan
(72)**Name of Inventor :**
1)Dr. Rajkumar Narayanan
2)Zafrul Hasan
3)Sanjaya Kumar Sarangi
4)Rasmita Lenka
5)Radhika S Patil
6)Shwetha G
7)Vaishnavi Ajay Inamdar
8)Shryavani K
9)Dr. V. Tamizhazhagan
10)Vivek Veeraiah
11)Dr. Md. Khaja Mohiddin
12)Dr.S.Balamurugan

(57) Abstract :
System and Design of Sensor-Based Electronic Ventilator for COVID-19 Patients (SBEV) help the patients to make use of the SBEV to inhale the required oxygen safely and automatically based on different body measurements using various sensors. The ventilator is used to refine the O2 and CO2 gases frequently by using front and back movable pistons. The CO2 filter helps to absorb the CO2 gases from the ventilator to the patient. The fresh air is also inputted into the ventilator hose. The combined air and O2 have been passed through a humidifier to normalize the O2 with standard heat and humidity. One side valve helps to pass the gases in one way only. The various sensors are used to measure the different body values like temperature, heart rate, etc. to control the flow of O2 to the patients from the ventilator by the control unit. The ventilator outflow helps to move away from the CO2 gas from the ventilator. The SBEV control unit helps to monitoring and managing the successful functioning of the whole SBEV system. By using this SBEV, the patients to make use of the SBEV to inhale the required oxygen safely and automatically based on different body measurements using various sensors.

No. of Pages : 16 No. of Claims : 3

(12) PATENT APPLICATION PUBLICATION
(21) Application No.202141022387 A
(19) INDIA
(22) Date of filing of Application :19/05/2021
(43) Publication Date : 11/06/2021

(54) Title of the invention : SYSTEM FOR CASH DEPOSITING AND DISPENSING WITH AUTO SANITIZATION FUNCTIONALITY BASED ON THE INTERNET OF THINGS

(51) International classification	:G07F0019000000, G07D0011000000, G07D0001020000, A61L0002240000, G07D0011245000
(31) Priority Document No	:NA
(32) Priority Date	:NA
(33) Name of priority country	:NA
(86) International Application No	:NA
Filing Date	:NA
(87) International Publication No	: NA
(61) Patent of Addition to Application Number	:NA
Filing Date	:NA
(62) Divisional to Application Number	:NA
Filing Date	:NA

(71)**Name of Applicant :**
1)Dr. Devi.A
Address of Applicant :Assistant Professor, Reva University, School of Computer Science and Applications, Bangalore, India Karnataka India
2)Dr. Kolachina Srinivas
3)Dr. K. Bhavana Raj
4)Ms.Charu Singh
5)Dr. Vivek Kapur
6)Dr. Smita Nirkhi
7)Dr. Richa Gupta
8)Mr. Sachin Dhull
9)Smriti Sachan
10)Mr. Dipesh Vaya
11)Puja Acharya
12)Mrs. Jyoti Gupta
(72)**Name of Inventor :**
1)Dr. Devi.A
2)Dr. Kolachina Srinivas
3)Dr. K. Bhavana Raj
4)Ms.Charu Singh
5)Dr. Vivek Kapur
6)Dr. Smita Nirkhi
7)Dr. Richa Gupta
8)Mr. Sachin Dhull
9)Smriti Sachan
10)Mr. Dipesh Vaya
11)Puja Acharya
12)Mrs. Jyoti Gupta

(57) Abstract :
The present invention relates to system for cash depositing and dispensing with auto sanitization functionality based on the internet of things. The objective of the present invention is to solve the problems in the prior art technologies of disinfecting the cash dispensing or deposit in an automatic teller machine.

No. of Pages : 26 No. of Claims : 5

(12) PATENT APPLICATION PUBLICATION
(19) INDIA
(22) Date of filing of Application :19/05/2021
(21) Application No.202141022434 A
(43) Publication Date : 11/06/2021

(54) Title of the invention : MULTI STAGE BLADE ROTOR FOR HORIZONTAL AXIS WIND TURBINE

(51) International classification	:F03D0009250000, F03D0001060000, F03D0003060000, F03D0001020000, F03D0003020000
(31) Priority Document No	:NA
(32) Priority Date	:NA
(33) Name of priority country	:NA
(86) International Application No	:NA
Filing Date	:NA
(87) International Publication No	: NA
(61) Patent of Addition to Application Number	:NA
Filing Date	:NA
(62) Divisional to Application Number	:NA
Filing Date	:NA

(71)**Name of Applicant :**
1)Dr.Praveen Mannam
Address of Applicant :H.No: 102-2-411, Bonthapadu-(Village), Etukuru (Post), Guntur (Md & Dt), Andhra Pradesh-522017. Email id: praveen0216@gmail.com Mobile No: +91-7337065969 Andhra Pradesh India
2)Dr. NMG Kumar, Sree Vidyanikethan Engineering College
3)Saurabh Kumar Singh, S B JAIN INSTITUTE OF TECHNOLOGY MANAGEMENT AND RESEARCH
4)Dr. Chandrasekar K., SJB Institute of Tech
5)Dr. Shivappa H A, Dr. Ambedkar Institute of Technology
6)S.SENTHILMURUGAN, SRMIST
7)VISWANATHAN GANESH, Chalmers University of Technology
8)Hiran Gabriel D J, PSG college of Technology
9)Dr.Hasan Koten, Istanbul Medeniyet University
10)Dr.Sourabh Kumar Jain, Research Foundation of India
11)Dr.Makarand Upadhyaya, BITS, Pilani
12)Seerapu Varalakshmi, Dr.LANKAPALLI BULLAYYA COLLEGE OF ENGINEERING
13)M.Veerasundaram, SRI SAIRAM INSTITUTE OF TECHNOLOGY

(72)**Name of Inventor :**
1)Dr.Praveen Mannam
2)Dr. NMG Kumar, Sree Vidyanikethan Engineering College
3)Saurabh Kumar Singh, S B JAIN INSTITUTE OF TECHNOLOGY MANAGEMENT AND RESEARCH
4)Dr. Chandrasekar K., SJB Institute of Tech
5)Dr. Shivappa H A, Dr. Ambedkar Institute of Technology
6)S.SENTHILMURUGAN, SRMIST
7)VISWANATHAN GANESH, Chalmers University of Technology
8)Hiran Gabriel D J, PSG college of Technology
9)Dr.Hasan Koten, Istanbul Medeniyet University
10)Dr.Sourabh Kumar Jain, Research Foundation of India
11)Dr.Makarand Upadhyaya, BITS, Pilani
12)Seerapu Varalakshmi, Dr.LANKAPALLI BULLAYYA COLLEGE OF ENGINEERING
13)M.Veerasundaram, SRI SAIRAM INSTITUTE OF TECHNOLOGY

(57) Abstract :
Currently wind turbines have been intended to yield the kinetic energy from the wind and the same convert this kinetic energy into electrical energy. The favoured type of wind turbine for electricity generation purpose is a horizontal axis wind turbine (HAWT). The size of wind turbines and constituting components like blades grow up rapidly. As blades grow larger, the amount of reinforcement upsurges in a logarithmic progression. Size and cost of blades can be concentrated using rotor/blade supporting means. In this invention, joined blade rotor system specially for HAWT presented. This present invention also intended to provide light weight, low cost and high efficiency rotor system for horizontal axis wind turbine (HAWT). The rotor system may preferably include a number of joined blade assemblies spreading radially from a central hub having a considerably horizontal axis. Each joined blade assembly may preferably encompass at least two blades, a first blade and a second blade (or may comprise more blades) in dissimilar rotor planes. The first and second blades may rather be linked by one or more brace systems to each other.

No. of Pages : 12 No. of Claims : 3

(12) PATENT APPLICATION PUBLICATION
(21) Application No.202141022452 A
(19) INDIA
(22) Date of filing of Application :19/05/2021
(43) Publication Date : 11/06/2021

(54) Title of the invention : APPARATUS FOR SANITIZING ARTICLES WITH ROTATABLE INNER CHAMBER TO EVENLY DISTRIBUTE UV RADIATION

(51) International classification	:A61L0002100000, F21V0007000000, A61L0002240000, H01J0061350000, A61L0002260000
(31) Priority Document No	:NA
(32) Priority Date	:NA
(33) Name of priority country	:NA
(86) International Application No	:PCT//
Filing Date	:01/01/1900
(87) International Publication No	: NA
(61) Patent of Addition to Application Number	:NA
Filing Date	:NA
(62) Divisional to Application Number	:NA
Filing Date	:NA

(71)**Name of Applicant :**
1)VAYU NANDANA KISHORE. PABBISETTI
Address of Applicant :Assistant Professor, Freshman Engineering Department, Lakireddy Balireddy College of Engineering, Mylavaram, Krishna District, Andhra Pradesh - 521230, India. Andhra Pradesh India
2)ATRAGADA. CHITTI BABU
3)JUJJAVARAPU. ASHOK
4)PARITALA.RAGHAVA RAO
5)NAGHAVARAPU. NARASIMHA RAO
6)BHOGI. JAYARAM SATYANARAYANA SWAMY
7)NAKKA. RAJESWARA RAO
8)PADAMATI.NARESH
9)SRIKHAKOLANU. NAGA SURYA MANASA
(72)**Name of Inventor :**
1)VAYU NANDANA KISHORE. PABBISETTI
2)ATRAGADA. CHITTI BABU
3)JUJJAVARAPU. ASHOK
4)PARITALA.RAGHAVA RAO
5)NAGHAVARAPU. NARASIMHA RAO
6)BHOGI. JAYARAM SATYANARAYANA SWAMY
7)NAKKA. RAJESWARA RAO
8)PADAMATI.NARESH
9)SRIKHAKOLANU. NAGA SURYA MANASA

(57) Abstract :
7. ABSTRACT An apparatus (100) for sanitizing articles with rotatable inner chamber to evenly distribute UV radiation is disclosed. The apparatus comprises of a cylindrical housing (2) with an acting inner wall, a top door (4), and an acting inner portion of a base (6). The apparatus comprises of two UV light (8a, 8b) sources disposed one on the acting inner wall of the said cylindrical housing (2) and one on the acting inner portion of the said base (6) of the cylindrical housing (2). The acting inner wall of the cylindrical housing (2) is surfaced with a highly reflecting layer and/or a coating. The said top door (4) is configured to selectively close and open for substantially sealing the cylindrical housing. The apparatus embraces an article placed in the cylindrical housing with the said electronic circuitry activating the UV lamp (8a, 8b) for a predetermined period of time, such that UV light from the light source and UV light (8a, 8b) reflected back into the cylindrical housing by the plurality of reflector layer illuminates the article for sanitizing the article (12). The figure associated with Abstract is Fig. 1.

No. of Pages : 13 No. of Claims : 5

(12) PATENT APPLICATION PUBLICATION
(19) INDIA
(22) Date of filing of Application :19/05/2021
(21) Application No.202141022473 A
(43) Publication Date : 11/06/2021

(54) Title of the invention : BIFACIAL BUCK BOOST POWER CONVERTER WITH CHARGING FACET FOR E-BIKE

(51) International classification	:G01R0031367000, H02P0006182000, H02M0003158000, H02J0007000000, H01L0031068000
(31) Priority Document No	:NA
(32) Priority Date	:NA
(33) Name of priority country	:NA
(86) International Application No	:NA
Filing Date	:NA
(87) International Publication No	: NA
(61) Patent of Addition to Application Number	:NA
Filing Date	:NA
(62) Divisional to Application Number	:NA
Filing Date	:NA

(71)**Name of Applicant :**
1)Gopinath A
Address of Applicant :Associate Professor, School of Electrical & Electronics Engineering, REVA University, Bangalore-560064 Karnataka India
2)Nagesh B K
3)Sudhakar Rao P
(72)**Name of Inventor :**
1)Gopinath A
2)Nagesh B K
3)Sudhakar Rao P

(57) Abstract :
Electric-bikes or e-bikes are human-powered pedal-drive which combines the mechanical pedal-drive with electric motor actuated from an on-board rechargeable battery package in excess of the pedals. The rider or user can have a choice to use ride using pedals or using battery power or simultaneously. Recently, e-bikes has become most commodious, economical, and eco-friendly transportation mode for short distances, hence gain immense vogue in various countries. Normally, an energy management mechanism is very predominant for ameliorate the system efficiency and elongate the endurance. Therefore, well-crafted charging strategies with engulf the estimation approaches for tracking battery capacity are key facet in energy management of e- bikes. Thus, an economical and compact size integrated with SOC estimation Function and energy produced from the back electromotive force (BEMF) used for charging the battery by using bifacial power converter fed e-bike is proposed. The main layout is a series bi-facial buck-boost converter, which fetch the energy stored in battery for driving the e-bike and can recycle the energy produced from the back electromotive force (BEMF) of the motor (supplying back) to charge battery by changing the operation mode (either Buck or Boost Mode) by comparing the back emf and battery voltage. Additionally, the proposed converter can also set out as a charger cascaded with a rectifier circuit by connecting with AC source.

No. of Pages : 11 No. of Claims : 3

(12) PATENT APPLICATION PUBLICATION
(21) Application No.202141022495 A
(19) INDIA
(22) Date of filing of Application :20/05/2021
(43) Publication Date : 11/06/2021

(54) Title of the invention : AN INSTRUMENT TO GO AGAINST SPOOFING ASSAULTS INTHE UTILIZATION OF ENGINEERED INSIGHT

(51) International classification	:H04L0029060000, G06N0003000000, G06N0020000000, G06F0021550000, H04L0009060000
(31) Priority Document No	:NA
(32) Priority Date	:NA
(33) Name of priority country	:NA
(86) International Application No	:NA
Filing Date	:NA
(87) International Publication No	: NA
(61) Patent of Addition to Application Number	:NA
Filing Date	:NA
(62) Divisional to Application Number	:NA
Filing Date	:NA

(71)**Name of Applicant :**
1)Dr. B. ANIRUDHAN
Address of Applicant :Nehru Arts and Science College, (Autonomous), Nehru Gardens, T. M. Palayam, Coimbatore 641105, Tamil Nadu, India Tamil Nadu India
2)SENTHIL KUMAR SEETHAPATHY
3)Dr. N. SHANI
4)Dr. S. SENTHIL KUMAR
5)Dr. P. K. MANOJ KUMAR
6)M. LEELAVATHI
7)Dr. N. KAVITHA
8)Dr. K. SELVAVINAYAKI
9)Dr. D. VIMAL KUMAR
(72)**Name of Inventor :**
1)Dr. B. ANIRUDHAN
2)SENTHIL KUMAR SEETHAPATHY
3)Dr. N. SHANI
4)Dr. S. SENTHIL KUMAR
5)Dr. P. K. MANOJ KUMAR
6)M. LEELAVATHI
7)Dr. N. KAVITHA
8)Dr. K. SELVAVINAYAKI
9)Dr. D. VIMAL KUMAR

(57) Abstract :
ABSTRACT AN INSTRUMENT TO GO AGAINST SPOOFING ASSAULTS IN THE UTILIZATION OF ENGINEERED INSIGHT Because of the ever-increasing complexities in cybercrimes, there is the want for cyber protection techniques to be more robust and sensible. this can make protection mechanisms to be capable of making actual-time decisions which could efficaciously respond to sophisticated attacks. mainly, the usage of synthetic intelligence for preventing cyber crimes. The ever-increasing risk of cyber attacks and crimes grew exponentially with latest improvements in artificial intelligence. it's been applied in nearly each discipline of sciences and engineering. From healthcare to robotics, AI has created a revolution. It turned into determined that artificial sensible methods have made excellent contributions to fighting cybercrimes with vast improvement in intrusion detection systems. It became additionally determined that there may be a reduction in computational complexity, model schooling times and fake alarms. wherein conventional security systems is probably sluggish and insufficient, artificial intelligence strategies can enhance their standard protection performance and provide higher protection from more and more sophisticated cyber threats. Beside the notable opportunities attributed to AI inside cyber protection, its use has justified dangers and concerns. To in addition boom the adulthood of cyber safety, a holistic view of businesses™ cyber surroundings is required wherein AI is mixed with human perception, considering neither human beings nor AI alone has verified universal achievement on this sphere. it is consequently recommended that to enhance studies in synthetic intelligence for CyberSec, need to undertake more recent techniques and also put up in other associated stores. Figure 2

No. of Pages : 11 No. of Claims : 4

(12) PATENT APPLICATION PUBLICATION
(21) Application No.202141022498 A
(19) INDIA
(22) Date of filing of Application :20/05/2021
(43) Publication Date : 11/06/2021

(54) Title of the invention : AN INTELLIGENT GUIDED PLAYER PERFORMANCE SYSTEM FOR SPORT FENCING

(51) International classification	:A63B0071060000, A63B0069360000, A63B0069020000, A63B0024000000, A63B0102320000	(71)**Name of Applicant :** **1)SpearAI Practice Private Limited** Address of Applicant :J 58 Chaithanya Smaran, Whitefield Hoskote main road, Kannamangala, Bangalore, Karnataka Karnataka India
(31) Priority Document No	:NA	(72)**Name of Inventor :**
(32) Priority Date	:NA	**1)Manisha Sriraman**
(33) Name of priority country	:NA	**2)Poorvi Sriraman**
(86) International Application No	:PCT// /	
Filing Date	:01/01/1900	
(87) International Publication No	: NA	
(61) Patent of Addition to Application Number	:NA	
Filing Date	:NA	
(62) Divisional to Application Number	:NA	
Filing Date	:NA	

(57) Abstract :
AN INTELLIGENT GUIDED PLAYER PERFORMANCE SYSTEM FOR SPORT FENCING The present invention provides an intelligent guided player performance system for the sport of fencing that provides continuous and personalized player performance improvement capabilities to coaches and students. The intelligent guided player performance system of the present invention efficiently accounts for valid and invalid touches during practice sessions, based on the weapon used, through non-invasion methods, and records such data and converts it into data models which can be used to improve player performance.

No. of Pages : 16 No. of Claims : 5

(12) PATENT APPLICATION PUBLICATION
(21) Application No.202141022521 A
(19) INDIA
(22) Date of filing of Application :20/05/2021
(43) Publication Date : 11/06/2021

(54) Title of the invention : A KIND OF RECTANGULAR PATCH ANTENNA USING MULTI-RESONANT SLOTS FOR BANDWIDTH IMPROVEMENT

(51) International classification	:H01Q0009040000, H01Q0001380000, H01Q0001500000, H01Q0001480000, H01Q0005500000
(31) Priority Document No	:NA
(32) Priority Date	:NA
(33) Name of priority country	:NA
(86) International Application No	:NA
Filing Date	:NA
(87) International Publication No	: NA
(61) Patent of Addition to Application Number	:NA
Filing Date	:NA
(62) Divisional to Application Number	:NA
Filing Date	:NA

(71)**Name of Applicant :**
1)BOLLAVATHI LOKESHWAR, RVRJCCE
Address of Applicant :Assistant Professor, Department of ECE, R.V.R. & J.C. College of Engineering, Chowdavaram, Guntur, Andhra Pradesh India-522019 Andhra Pradesh India
2)Mr.RAMESH DESHPADE, BVRIT
3)Mrs. LANKA PADMALATHA, GEC
4)Mrs. MADHAVI DEVI LANKA, PVPSIT
5)Dr. E. GNANAMANOHARAN, ANNAMALAI UNIVERSITY
6)Mrs. T. NIRMALA, SPMVV
(72)**Name of Inventor :**
1)BOLLAVATHI LOKESHWAR, RVRJCCE
2)Mr.RAMESH DESHPADE, BVRIT
3)Mrs. LANKA PADMALATHA, GEC
4)Mrs. MADHAVI DEVI LANKA, PVPSIT
5)Dr. E. GNANAMANOHARAN, ANNAMALAI UNIVERSITY
6)Mrs. T. NIRMALA, SPMVV

(57) Abstract :
The present invention discloses a kind of rectangular patch antenna using multi-resonant slots for bandwidth improvement 100. A rectangular patch 102 loaded with U-shaped slot 103 and defected ground structure are attached to top and bottom surfaces of the dielectric substrate 101, respectively. U-slot consists of two parallel vertical rectangular slots and a horizontal rectangular slot. To improve the impedance matching, a simple transformed unit 105 is placed between the microstrip line 104 and feed point. Ansfot HFSS software is used to design and simulate the proposed antenna, which exhibits multi-resonant characteristics with the inclusion of several structures which are termed as multi-resonant structures. The notch band of 5.26 GHz (impedance bandwidth of 0.8 GHz) is observed by introducing U-slot 103 and the corresponding gain is 4.587 dB at 7 GHz. The notch band antenna eliminates the interference caused by WLAN systems.

No. of Pages : 15 No. of Claims : 8

(12) PATENT APPLICATION PUBLICATION
(19) INDIA
(22) Date of filing of Application :20/05/2021

(21) Application No.202141022523 A
(43) Publication Date : 11/06/2021

(54) Title of the invention : MILK ANALYZER APPARATUS

(51) International classification	:G01N0033040000, A01J0005040000, A01J0005013000, G01N0033060000, G01N0021780000	(71)**Name of Applicant :** **1)Babumon Gopi** Address of Applicant :˜Sreehari™ Near Ayini Temple, Ayini Temple Road, Maradu P.O, Ernakulam. Kerala India (72)**Name of Inventor :** **1)Babumon Gopi**
(31) Priority Document No	:NA	
(32) Priority Date	:NA	
(33) Name of priority country	:NA	
(86) International Application No	:NA	
Filing Date	:NA	
(87) International Publication No	: NA	
(61) Patent of Addition to Application Number	:NA	
Filing Date	:NA	
(62) Divisional to Application Number	:NA	
Filing Date	:NA	

(57) Abstract :
Title: Milk Analyzer Apparatus. A milk analyzer apparatus configured to simultaneously measure Fat content and corrected lactometer reading of raw milk within a very short time frame is disclosed. A part of the milk sample is passed through an oscillating U-tube (2) to calculate the CLR content whereas another part of the milk sample is mixed with EDTA solution, wherein said milk-EDTA mixture it is subjected to optical analysis in an optical sensor assembly (16) unit to determine the Fat content. A microcontroller unit (21) controls and regulates the operation of the various components of the apparatus, as well as computing the CLR and Fat content of the milk sample. FIG.1

No. of Pages : 25 No. of Claims : 9

(12) PATENT APPLICATION PUBLICATION
(21) Application No.202141022529 A
(19) INDIA
(22) Date of filing of Application :20/05/2021
(43) Publication Date : 11/06/2021

(54) Title of the invention : CLOUD AND IOT BASED ALCOHOL AND HEALTH MONITORING SYSTEM

(51) International classification	:A61B0005000000, H04L0029080000, G01R0019250000, B60R0021010000, A61B0005180000
(31) Priority Document No	:NA
(32) Priority Date	:NA
(33) Name of priority country	:NA
(86) International Application No	:NA
Filing Date	:NA
(87) International Publication No	: NA
(61) Patent of Addition to Application Number	:NA
Filing Date	:NA
(62) Divisional to Application Number	:NA
Filing Date	:NA

(71)**Name of Applicant :**
1)Dr.AR.Sivakumaran
Address of Applicant :Professor Department of Information Technology Malla Reddy Engineering College for Women, Secunderabad-500100. Tamil Nadu India
2)Dr.M.Vanitha
3)Dr.P.T.Vasanth Raj
4)Dr.Hemanta Kumar Bhuyan
5)Mr.D.Selvapandian
6)Dr Sundara Pandiyan S
7)Dr.Jebakumar Immanuel D
(72)**Name of Inventor :**
1)Dr.AR.Sivakumaran
2)Dr.M.Vanitha
3)Dr.P.T.Vasanth Raj
4)Dr.Hemanta Kumar Bhuyan
5)Mr.D.Selvapandian
6)Dr Sundara Pandiyan S
7)Dr.Jebakumar Immanuel D

(57) Abstract :
Wireless alcohol and health monitoring system that can monitor a human 24x7. Vehicle driving to manufacturing plants, Offices, Hospitals, Military, and other such ventures need to screen their staff/faculty follow all hard-working attitudes that incorporate, not coming to premises affected by liquor. This guarantees legitimate hard-working attitudes are followed. Our proposed framework takes into consideration liquor and wellbeing checking in addition to a detailing framework that screens this and reports it to concerned staff distantly over the web. Our framework comprises an IOT based circuit framework that utilizes a microcontroller-based circuit framework. The framework has liquor just as pulse observing sensors to check for liquor utilization just as improper circulatory strain checking. This guarantees no events of mishaps because of liquor impact or unpleasant medical issues. This system consists of addiction to alcohol finding with health monitoring. Controlling and processing is completed through the Arduino Uno board, all the sensors are connected to Arduino UNO. Through this technique, we will measure ECG, heartbeat, BP, and spo2. Through sensors, it is possible to live off these values. Here all the sensors are powered employing a solar energy system. these analog sensors are often connected to Arduino through any of the six analog pins. These values are then used for detecting any critical situation. within the case of a critical situation, an alert is often given as a message. Also, it's possible to watch the person™s health from any location within the world through the cloud. Data from sensors is uploaded to the cloud periodically with no interruption if the web is out there. Here ESP8266 wifi module is employed for connecting Arduino to the web.

No. of Pages : 6 No. of Claims : 2

(12) PATENT APPLICATION PUBLICATION
(21) Application No.202141022539 A
(19) INDIA
(22) Date of filing of Application :20/05/2021
(43) Publication Date : 11/06/2021

(54) Title of the invention : SYSTEM AND METHOD FOR TRAFFIC PREDICTION

(51) International classification	:G01C0021340000, G08G0001010000, G01C0021360000, H04L0012851000, G06N0020000000	(71)**Name of Applicant :** **1)Suvitha D** Address of Applicant :Anna University CEG campus, Chennai - 600025 Tamil Nadu India (72)**Name of Inventor :** **1)Suvitha D**
(31) Priority Document No	:NA	
(32) Priority Date	:NA	
(33) Name of priority country	:NA	
(86) International Application No	:NA	
Filing Date	:NA	
(87) International Publication No	: NA	
(61) Patent of Addition to Application Number	:NA	
Filing Date	:NA	
(62) Divisional to Application Number	:NA	
Filing Date	:NA	

(57) Abstract :
The disclosed invention relates to a system and a method of predicting traffic. The disclosed invention provides a robust and effective traffic prediction system using decision tree classifier. The disclosed invention provides a system (100) comprising: data receiving unit (108) configured to receive traffic data; a data storage unit (110) configured to create a lookup table in a database (104); a processing unit (112) configured to: partition training data; discard dependencies on statistical noise and/or anomalies in the traffic data; predict traffic range for one or more routes based on the traffic data using a decision tree classifier; predict an optimal route from the one or more routes; and generate a map using one or more third party product and service providers based on the predicted optimal route; a display unit (116) communicably connected to at least one of the user devices (106a-106m) and configured to display the generated map.

No. of Pages : 18 No. of Claims : 10

(12) PATENT APPLICATION PUBLICATION
(21) Application No.202141022571 A
(19) INDIA
(22) Date of filing of Application :20/05/2021
(43) Publication Date : 11/06/2021

(54) Title of the invention : FLOOD RESCUE OPERATION USING INTELLIGENT DRONE FOR SUPPORTING DISASTER MANAGEMENT

(51) International classification	:B64C0039020000, G08B0025010000, G08B0027000000, G08B0025140000, G06Q0010060000	(71)**Name of Applicant :** **1)Mahesh Kumar** Address of Applicant :Assistant Professor School of Electrical & Electronics Engineering, REVA University, Bangalore-64 Karnataka India
(31) Priority Document No	:NA	**2)Dhanush P Shetty**
(32) Priority Date	:NA	**3)Bharath Rao N**
(33) Name of priority country	:NA	**4)Bhargav S**
(86) International Application No	:NA	**5)Hemanth L**
Filing Date	:NA	(72)**Name of Inventor :**
(87) International Publication No	: NA	**1)Mahesh Kumar**
(61) Patent of Addition to Application Number	:NA	**2)Dhanush P Shetty**
Filing Date	:NA	**3)Bharath Rao N**
(62) Divisional to Application Number	:NA	**4)Bhargav S**
Filing Date	:NA	**5)Hemanth L**

(57) Abstract :
ABSTRACT Flood is such an adverse natural calamity which can washaway several people and houses from their location within a short span. It can even submerge the whole low altitude areas under the water which makes it even harder to locate exact location of the human habitation. The submergence of the area will easily change the terrain and it™s hard to get the knowledge of what™s beneath the water. This project uses an Unmanned Aerial Vehicle (UAV) to quickly fly over an area and detect people stranded in multiple areas and send their location data using Global Positioning System (GPS) module back to the control center where they can mark the coordinates in the flood affected area™s map and categorize the severity of the rescue plan on priority basis. The system also has a speaker in the UAV which will help the first responders communicate with the people by providing valuable information regarding the situation.The model will have a UAV, communication system and live video streaming system. The first responders will move to the location and to assess the situation like number of people stranded, boat routes planning and to do routine checks, they can use the UAV and its accessories to plan their action in an efficient way. It will have an on-board communication system to have half-duplex communication with the survivors and first responders. To make the disaster management easier and rescue planning faster, we have used a computer vision library tool which detects people and sends their location back to the control center.

No. of Pages : 13 No. of Claims : 3

(12) PATENT APPLICATION PUBLICATION
(19) INDIA
(22) Date of filing of Application :21/05/2021
(21) Application No.202141022674 A
(43) Publication Date : 11/06/2021

(54) Title of the invention : MACHINE LEARNING SUPPORTED PREDICTIVE SYSTEM AND METHOD OF ANALYZING THE EMOTION OF CUSTOMERS THEREOF

(51) International classification	:G06Q0030020000, G06Q0030060000, H04N0005232000, G06Q0010060000, H04W0004000000
(31) Priority Document No	:NA
(32) Priority Date	:NA
(33) Name of priority country	:NA
(86) International Application No	:NA
Filing Date	:NA
(87) International Publication No	: NA
(61) Patent of Addition to Application Number	:NA
Filing Date	:NA
(62) Divisional to Application Number	:NA
Filing Date	:NA

(71)**Name of Applicant :**
1)Dr. VEMPATI KRISHNA
Address of Applicant :Professor, Department of Computer Science and Engineering, TKR college of Engineering and Technology, Saroornagar, Hyderabad Telangana India
2)Dr. V. L. PAVANI
3)Dr. M. I. THARIQ HUSSAN
4)Dr. N. NALINI
5)Mr. P. NARESH
6)Ms. APARNA MANIKONDA
7)Mr. VORUGANTI RAMESH
8)Dr. A. L. SREENIVASULU
(72)**Name of Inventor :**
1)Dr. VEMPATI KRISHNA
2)Dr. V. L. PAVANI
3)Dr. M. I. THARIQ HUSSAN
4)Dr. N. NALINI
5)Mr. P. NARESH
6)Ms. APARNA MANIKONDA
7)Mr. VORUGANTI RAMESH
8)Dr. A. L. SREENIVASULU

(57) Abstract :
The present invention relates to a customer behavior predictive system to facilitate displaying of appropriate products while browsing the sites, more particularly machine learning supported emotion analysis system considering the spending pattern, browsing history, idle time spent, ad-popup time and response in real-time, effectively, comprising an internet of things enabled standalone device , said standalone device [100a, 100b and 100c] interfaced with a camera device along with an image processing module to capture the activities, interactions, and facial expressions and a display unit, an internet server, said internet server [200] wirelessly connected with the said standalone device, an a mobile phone device, said mobile phone device [300] displayed the processed data delivered by the said internet server. FIGURE 1

No. of Pages : 19 No. of Claims : 10

(12) PATENT APPLICATION PUBLICATION
(21) Application No.202141022696 A
(19) INDIA
(22) Date of filing of Application :21/05/2021
(43) Publication Date : 11/06/2021

(54) Title of the invention : INTERNET OF THINGS AND ARTIFICIAL INTELLIGENCE BASED INTELLIGENT VEHICLE CONTROLLED RESCUE SYSTEM FOR EPILEPSY PATIENTS

(51) International classification	:G06F0016951000, G06N0003080000, H04N0007180000, H04L0029080000, G06Q0050180000
(31) Priority Document No	:NA
(32) Priority Date	:NA
(33) Name of priority country	:NA
(86) International Application No	:NA
Filing Date	:NA
(87) International Publication No	: NA
(61) Patent of Addition to Application Number	:NA
Filing Date	:NA
(62) Divisional to Application Number	:NA
Filing Date	:NA

(71)**Name of Applicant :**
1)Dr.Reshma V.K
Address of Applicant :Assistant Professor, Department of Computer Science and Engineering, Jawaharlal College of Engineering and Technology, Jawahar Gardens,Lakkidi, Mangalam, Ottapalam, Kerala, India Kerala India
2)Ms.Charu Singh
3)Dr. Aleem Ali
4)Dr. Navaid Zafar Rizvi
5)Dr. Meena Rao
6)Dr. Pooja Malik
7)Dr. Raviranjan Kr. Singh
8)Dr. Vineet Kumar Singh
9)Dr. Anubhav Kumar Prasad
10)Dr. Dharm Raj Singh
11)Dr. Pavithra G.
12)Prof. Anupama T.A.
(72)**Name of Inventor :**
1)Dr.Reshma V.K
2)Ms.Charu Singh
3)Dr. Aleem Ali
4)Dr. Navaid Zafar Rizvi
5)Dr. Meena Rao
6)Dr. Pooja Malik
7)Dr. Raviranjan Kr. Singh
8)Dr. Vineet Kumar Singh
9)Dr. Anubhav Kumar Prasad
10)Dr. Dharm Raj Singh
11)Dr. Pavithra G.
12)Prof. Anupama T.A.

(57) Abstract :
The present invention relates to internet of things and artificial intelligence based intelligent vehicle controlled rescue system for epilepsy patients. The objective of the present invention is to solve the problems in the prior art technologies of driver™s health monitoring and automatically stop the car according to the abrupt attack of epilepsy.

No. of Pages : 30 No. of Claims : 4

(12) PATENT APPLICATION PUBLICATION
(21) Application No.202141022852 A
(19) INDIA
(22) Date of filing of Application :21/05/2021
(43) Publication Date : 11/06/2021

(54) Title of the invention : DEVELOPMENT OF LOW COST SOLAR POWERED SMART TRAP: AN INTEGRATED PEST MANAGEMENT

(51) International classification	:A01M0001100000, A01M0001020000, A01M0001040000, A01N0025180000, A01M0001200000
(31) Priority Document No	:NA
(32) Priority Date	:NA
(33) Name of priority country	:NA
(86) International Application No	:NA
Filing Date	:NA
(87) International Publication No	: NA
(61) Patent of Addition to Application Number	:NA
Filing Date	:NA
(62) Divisional to Application Number	:NA
Filing Date	:NA

(71)**Name of Applicant :**
1)Dr. KATARAKI PRAMODKUMAR S
Address of Applicant :Associate Professor, School Of Mechanical Engineering, REVA University, Rukmini Knowledge Park Kattigenahalli, Yelhanka, Bangalore. 560064. Karnataka. Karnataka India
(72)**Name of Inventor :**
1)Dr. KATARAKI PRAMODKUMAR S
2)Dr. Ahmad Faiz Bin Zubair
3)Dr. Jamaluddin Bin Abdullah
4)Dr. Ahmed A. Hussien
5)Dr. Isam Qasem
6)Dr. Ayub Ahmed Janvekar
7)Mr. Syed Anas Quadri
8)Mr. Vineeth Kumar D
9)Mr. Jeeva S
10)Ms. Kruthi J.R

(57) Abstract :
The indiscriminate usage of pesticides to control insect pest population has led to production of pesticide residue and pest damaged crops, therefore IPM aims to reduce indiscriminate usage of pesticides by using parasitoids, traps. The open traps (delta, jackson, sticky) significantly attract non-target insect pests and dust particles thereby leading to inefficient crop scouting. While enclosed traps (funnel, McPhail) set up with pheromone lures attract target insect pests and avoid significant attraction of non-target insect pests, but depend on crop scouting for pest identification. To eliminate inefficient crop scouting, identification of camera captured insect pests by SVM technique was developed. But ambient light conditions, plant orientations, hiding place of insect pests leads to generation of low quality camera images. Here, efforts are made to develop a Solar Powered Smart trap that performs efficiently and overcomes inefficient crop scouting by automatically camera capturing and counting of trapped insect pests.

No. of Pages : 4 No. of Claims : 3

(12) PATENT APPLICATION PUBLICATION
(21) Application No.202141022856 A
(19) INDIA
(22) Date of filing of Application :21/05/2021
(43) Publication Date : 11/06/2021

(54) Title of the invention : REAL TIME PATIENT HEALTH MONITORING AND INDICATION TO DOCTORS USING IOT

(51) International classification	:A61B0005000000, G16H0050300000, H04L0029080000, A61B0005020500, A61B0005110000	(71)**Name of Applicant :** **1)Dr. Kalpana Murugan** Address of Applicant :Professor and Head Department of Electronics and Communication Engineering Kalasalingam Academy of Research And Education, Anand Nagar, Krishnankoil-626126, Tamil Nadu, India. Tamil Nadu India
(31) Priority Document No	:NA	**2)Dr. V. Muneeswaran**
(32) Priority Date	:NA	**3)Mrs. S. Murugeswari**
(33) Name of priority country	:NA	**4)Mr. A. Rahul Kumar Reddy**
(86) International Application No	:NA	**5)Mr. T. Monish kumar**
Filing Date	:NA	**6)Mr. P. Ammaar**
(87) International Publication No	: NA	(72)**Name of Inventor :**
(61) Patent of Addition to Application Number	:NA	**1)Dr. Kalpana Murugan**
Filing Date	:NA	**2)Dr. V. Muneeswaran**
(62) Divisional to Application Number	:NA	**3)Mrs. S. Murugeswari**
Filing Date	:NA	**4)Mr. A. Rahul Kumar Reddy**
		5)Mr. T. Monish kumar
		6)Mr. P. Ammaar

(57) Abstract :
Remote based health monitoring diagnosis in medial field requires more number of sensors and human efforts if it is processed in a large extent. It is a hard task due to the shortage of medical professionals and system setup. To overcome this issue an IoT based health care application is proposed in the research work. The proposed method consists of the web and mobile application based on continuous wireless monitoring of patients. The objective is to implement a low-cost system and transmit the patient unconditional signs in emergency situations. Sensors are being used for measuring the patient unconditional signs by using the wireless network. The sensors data are collected and transmitted to the cloud for storage via Wi-Fi module connected with the controller. The data is processed in the cloud and feedback steps are taken on the analysed data which can be further analysed by a doctor remotely. Remote viewing reduces burden to doctors and provides the exact health status of patient condition and it is sent to the doctor.

No. of Pages : 7 No. of Claims : 4

(12) PATENT APPLICATION PUBLICATION
(21) Application No.202141022867 A
(19) INDIA
(22) Date of filing of Application :21/05/2021
(43) Publication Date : 11/06/2021

(54) Title of the invention : METHOD TO UTILISE VEHICLE AREA IN PLATOON MANAGEMENT FOR ENERGY EFFICIENCY

(51) International classification	:B62D0035000000, G01V0005000000, G07B0015060000, G08G0001070000, F03G0007080000	(71)**Name of Applicant :** **1)M S Sunitha Patel** Address of Applicant :Door No.02, 19th Block, Dr.Rajkumar Road, Near BSNL Office, JSS Layout, Mysuru-570019 Karnataka India
(31) Priority Document No	:NA	(72)**Name of Inventor :**
(32) Priority Date	:NA	**1)M S Sunitha Patel**
(33) Name of priority country	:NA	
(86) International Application No	:NA	
Filing Date	:NA	
(87) International Publication No	: NA	
(61) Patent of Addition to Application Number	:NA	
Filing Date	:NA	
(62) Divisional to Application Number	:NA	
Filing Date	:NA	

(57) Abstract :
The invention relates to a method which utilize the vehicle area for optimal vehicle combination with two or more vehicles while moving in longitudinal direction. The invention also relates to vehicles for such a method. The invention can be applied in all road vehicles, where air drag is found in moving vehicle because of the area which resists the vehicle movement. The invention can be applied to achieve energy efficiency on all road vehicles which are propelled by conventional or non-conventional energies.

No. of Pages : 16 No. of Claims : 7

(12) PATENT APPLICATION PUBLICATION
(21) Application No.202141022882 A
(19) INDIA
(22) Date of filing of Application :21/05/2021
(43) Publication Date : 11/06/2021

(54) Title of the invention : RAIDAL AXIS ACTIVE-MAGNETO-RHEOLOGICAL TOOL DAMPER FOR BORING OPERATIONS

(51) International classification	:F16F0009530000, B23Q0011000000, C08K0005000000, B60G0017060000, F16F0015020000
(31) Priority Document No	:NA
(32) Priority Date	:NA
(33) Name of priority country	:NA
(86) International Application No	:NA
Filing Date	:NA
(87) International Publication No	: NA
(61) Patent of Addition to Application Number	:NA
Filing Date	:NA
(62) Divisional to Application Number	:NA
Filing Date	:NA

(71)**Name of Applicant :**
1)S. Lakshmana kumar
Address of Applicant :150/1, Srinagar, Aravinthar Ashramam Road, Narasothipatty, Salem Tamil Nadu India
2)Saranya S N
3)Rajan Raj Jawahar
(72)**Name of Inventor :**
1)S. Lakshmana kumar
2)Saranya S N
3)Rajan Raj Jawahar

(57) Abstract :
The invention relates to a fully active damping system, preferably for use in any machining operations. The varying amplitude of vibrations induced during machining operation is converted into voltage by a pre-programmed microcontroller which in turn used to vary the viscosity of the magneto-rheological fluid and flow rate of fluid in the electromagnetic chamber. This process activates the damper which minimizes the vibration produced during machining.

No. of Pages : 19 No. of Claims : 6

(12) PATENT APPLICATION PUBLICATION
(21) Application No.202141022885 A
(19) INDIA
(22) Date of filing of Application :22/05/2021
(43) Publication Date : 11/06/2021

(54) Title of the invention : Colourless Turmerones and Their Extraction Method Thereof

(51) International classification	:G06T0007900000, A61K0036899800, G01N0033360000, A61K0033000000, G06K0009460000
(31) Priority Document No	:NA
(32) Priority Date	:NA
(33) Name of priority country	:NA
(86) International Application No	:PCT//
Filing Date	:01/01/1900
(87) International Publication No	: NA
(61) Patent of Addition to Application Number	:NA
Filing Date	:NA
(62) Divisional to Application Number	:NA
Filing Date	:NA

(71)**Name of Applicant :**
1)Mr. Chamalla Tirumalarao
Address of Applicant :Door No: 27-256, Panchayat Officer's Colony, Appannapalem, Vepagunta, Visakhapatnam, Andhra Pradesh, India- 530047. Andhra Pradesh India
(72)**Name of Inventor :**
1)Mr. Chamalla Tirumalarao

(57) Abstract :
ABSTRACT: Title: Colourless Turmerones and Their Extraction Method Thereof The present disclosure proposes colourless turmerones and their extraction method thereof. The proposed method extracts colourless turmerones that does not form stains on the applied area and encourages use of turmerones. The colourless turmerones is applied on any substance or body or cloth and no visible colour or stain is formed on any surface, and the medicinal properties and efficacy of the colourless turmerones are retained. The proposed method extracts colourless turmerones which is helpful in preventive care, health maintenance, and slowing age-related degeneration. The extracted colourless turmerones does not stain on clothes of users.

No. of Pages : 16 No. of Claims : 6

(12) PATENT APPLICATION PUBLICATION
(19) INDIA
(22) Date of filing of Application :22/05/2021
(21) Application No.202141022887 A
(43) Publication Date : 11/06/2021

(54) Title of the invention : INTERNET OF THINGS BASED EBOLA VIRUS DETECTION AMONG MASSES

(51) International classification	:G06N0003000000, G06N0020000000, H04W0084180000, C07K0016100000, G06N0003020000
(31) Priority Document No	:NA
(32) Priority Date	:NA
(33) Name of priority country	:NA
(86) International Application No	:PCT//
Filing Date	:01/01/1900
(87) International Publication No	: NA
(61) Patent of Addition to Application Number	:NA
Filing Date	:NA
(62) Divisional to Application Number	:NA
Filing Date	:NA

(71)**Name of Applicant :**
1)Dr. PANEM CHARANARUR
Address of Applicant :H. NO. 97, NEAR SANTHERI VIDYALAYA, HANKON, KARWAR (U.K), KARNATAKA 581301 Karnataka India
2)Mr. DEEPAK SHRIPAT MANE
3)Dr. V. S. MANJULA
4)Mr. A. RANJITH
5)Dr. HARIKUMAR PALLATHADKA
6)Dr.ANITA VENAIK
7)Dr. KEYURKUMAR M NAYAK
(72)**Name of Inventor :**
1)Dr. PANEM CHARANARUR
2)Mr. DEEPAK SHRIPAT MANE
3)Dr. V. S. MANJULA
4)Mr. A. RANJITH
5)Dr. HARIKUMAR PALLATHADKA
6)Dr.ANITA VENAIK
7)Dr. KEYURKUMAR M NAYAK

(57) Abstract :
The health sector also opts for new scientific advances to track and diagnose Ebola Virus, which is currently in turmoil around the world. Artificial Intelligence is one way to control virus replication and the possibility of transmission in real-time. Artificial Intelligence technology can be an efficient approach. However, it is difficult to track individuals because Artificial Intelligence needs to undergo even more adjustments and the IoT sensors provide an ample feedback request. The proposal allows Bluetooth controlled sensors (Bluetooth Version 5.2 or BTV5.2) to be used to tackle the current crisis and allow quicker analysis by Artificial Intelligence for data collection by a person and sends the data to the processing engine to detect if an individual is infected or not. Both IoT-enabled Bluetooth modules sensors are combined with mobile phone cases to make the transport of people simpler. An embedded Artificial Intelligence module can process the status of the person and submit the information to the municipal authority or the nearest hospitals. The Artificial Intelligence controlled smartphone device allows patients to be monitored in real-time and limits the outbreak.

No. of Pages : 12 No. of Claims : 8

(12) PATENT APPLICATION PUBLICATION
(19) INDIA
(22) Date of filing of Application :22/05/2021
(21) Application No.202141022889 A
(43) Publication Date : 11/06/2021

(54) Title of the invention : MONITORING AND DETECTION OF COVID-19 PATIENTS USING INTERNET OF THINGS

(51) International classification	:A61B0005000000, A61B0005024000, G06Q0050220000, A61B0005010000, A61B0005145000
(31) Priority Document No	:NA
(32) Priority Date	:NA
(33) Name of priority country	:NA
(86) International Application No	:PCT//
Filing Date	:01/01/1900
(87) International Publication No	: NA
(61) Patent of Addition to Application Number	:NA
Filing Date	:NA
(62) Divisional to Application Number	:NA
Filing Date	:NA

(71)**Name of Applicant :**
1)Dr. G.R.RAGHAV
Address of Applicant :ASSOCIATE PROFESSOR,DEPARTMENT OF MECHANICAL ENGINEERING,SCMS SCHOOL OF ENGINEERING AND TECHNOLOGY, VIDYA NAGAR, PALISSERY, KARUKUTTY, ERNAKULAM-683576 Kerala India
2)Mr. DEEPAK SHRIPAT MANE
3)Dr. V. S. MANJULA
4)Mr. A. RANJITH
5)Dr. R. RAJ MOHAN
6)Dr. HARIKUMAR PALLATHADKA
7)Mr.ATUL BHARDWAJ
(72)**Name of Inventor :**
1)Dr. G.R.RAGHAV
2)Mr. DEEPAK SHRIPAT MANE
3)Dr. V. S. MANJULA
4)Mr. A. RANJITH
5)Dr. R. RAJ MOHAN
6)Dr. HARIKUMAR PALLATHADKA
7)Mr.ATUL BHARDWAJ

(57) Abstract :
The coronavirus outbreak is a threat to humanity in recent times that disrupts the global healthcare systems. The healthcare and government policies make utmost concern in preventing the infectious spread and in reducing the rate of infections in humans. In such cases, the monitoring and detection of infections across different organs in the human body are essential that may provide the original value of their heart rate and oxygen level. Further, various other parameters like blood sugar level and blood pressure are essentially monitored and safe diagnosis is carried out to save their lives. In this project, the interconnected Internet of Thing (IoT) based smart bands are used for pulse rate detection, oxygen level, and blood sugar levels. Such estimation would enable the patients to reduce the rate of infections via suitable medicines.

No. of Pages : 13 No. of Claims : 8

(12) PATENT APPLICATION PUBLICATION
(21) Application No.202141022914 A
(19) INDIA
(22) Date of filing of Application :22/05/2021
(43) Publication Date : 11/06/2021

(54) Title of the invention : SYSTEM AND METHOD FOR CROP AND FERTILIZER RECOMMENDATION THROUGH SOIL NUTRIENT MONITORING USING CYBER PHYSICAL SYSTEM AND MACHINE LEARNING

(51) International classification	:C05G0003000000, G01N0033240000, A01C0021000000, A01B0079000000, A01C0023040000
(31) Priority Document No	:NA
(32) Priority Date	:NA
(33) Name of priority country	:NA
(86) International Application No	:PCT//
Filing Date	:01/01/1900
(87) International Publication No	: NA
(61) Patent of Addition to Application Number	:NA
Filing Date	:NA
(62) Divisional to Application Number	:NA
Filing Date	:NA

(71)**Name of Applicant :**
1)Dr. Ajit Danti
Address of Applicant :Professor, Department of Computer Science and Engineering, School of Engineering and Technology, Christ (Deemed to Be University), Bangalore, India Karnataka India
2)Dr. Balachandran Krishnan
3)Dr. Suresha M
4)Dr. Sujatha A K
5)Prof. Manohar Madgi
6)Dr. VG. Ravindhren
7)Dr. Sapna Katiyar
8)Dr. Vinayendra Mani Tripathi
9)Dr. Soojey Ramchandra Deshpande
10)Mrs. Sonu Rana
11)Mrs. Monika Dhiman
12)Mrs. Anu Prakash
(72)**Name of Inventor :**
1)Dr. Ajit Danti
2)Dr. Balachandran Krishnan
3)Dr. Suresha M
4)Dr. Sujatha A K
5)Prof. Manohar Madgi
6)Dr. VG. Ravindhren
7)Dr. Sapna Katiyar
8)Dr. Vinayendra Mani Tripathi
9)Dr. Soojey Ramchandra Deshpande
10)Mrs. Sonu Rana
11)Mrs. Monika Dhiman
12)Mrs. Anu Prakash

(57) Abstract :
The present invention relates to system and Method for crop and fertilizer recommendation through soil nutrient monitoring using cyber physical system and machine learning. The objective of the present invention is to solve the problems in the prior art technologies of crop and fertilizer recommendation based on soil nutrient, soil type and agriculture field location.

No. of Pages : 30 No. of Claims : 7

(12) PATENT APPLICATION PUBLICATION
(19) INDIA
(22) Date of filing of Application :22/05/2021

(21) Application No.202141022930 A
(43) Publication Date : 11/06/2021

(54) Title of the invention : IOT ENABLED SMART AND SECURE E-CAMPUS

(51) International classification	:H04L0029080000, F21V0033000000, H02J0003000000, H04W0004700000, G06Q0050200000
(31) Priority Document No	:NA
(32) Priority Date	:NA
(33) Name of priority country	:NA
(86) International Application No	:PCT//
Filing Date	:01/01/1900
(87) International Publication No	: NA
(61) Patent of Addition to Application Number	:NA
Filing Date	:NA
(62) Divisional to Application Number	:NA
Filing Date	:NA

(71)**Name of Applicant :**
1)Dr. Jereesha Mary S J
Address of Applicant :Professor, Annai Velankanni College of Engineering, Kanyakumari District, TamilNadu. Tamil Nadu India
2)Dr. Sebastin Antony Joe,
3)Mr.Haydar Sabeeh Kalash
4)Dr.Ronald S. Cordova
5)Mr.Suresh Palarimath
6)Ms.Tamilarasi
7)Ms. Anish Pon Yamini K
8)Ms. Manju V M
9)Dr.S.Brilly Sangeetha
10)Dr. Wilfred Blessing N .R
(72)**Name of Inventor :**
1)Dr. Jereesha Mary S J
2)Dr. Sebastin Antony Joe,
3)Mr.Haydar Sabeeh Kalash
4)Dr.Ronald S. Cordova
5)Mr.Suresh Palarimath
6)Ms.Tamilarasi
7)Ms. Anish Pon Yamini K
8)Ms. Manju V M
9)Dr.S.Brilly Sangeetha
10)Dr. Wilfred Blessing N .R

(57) Abstract :
ABSTRACT IOT enabled smart and secure e-campus Internet of Things is considered as a cloud-based global network connecting different things through sensors. The IoT integrates several devices that interact with other items, computers, infrared, and the atmosphere in an intelligent way. This notion of innovation emphasizes the essential elements of a 'smart and safe education campus' model, and The Internet-of-Things (IoT) infrastructure enables an intelligent campus. An intelligent campus connects servers, peripherals, campus facilities, and internet connectivity for users. And the smart campus uses the IoT networks to link campus assets to the IP network, including exterior lighting, house, lighting, heating, cooling systems, security monitoring and physical connectivity systems, car parks, and more. Via the Internet of Things, all on an intelligent campus shares campus resources, The campus becomes a platform for innovation.

No. of Pages : 27 No. of Claims : 8

(12) PATENT APPLICATION PUBLICATION
(21) Application No.202141022931 A
(19) INDIA
(22) Date of filing of Application :22/05/2021
(43) Publication Date : 11/06/2021

(54) Title of the invention : AUTOMATED METICULOUS MITIGATION OF TRAFFIC CONGESTION IN HANDLING UNINTERRUPTED TRAVEL OF EMERGENCY VEHICLES USING RFID AND IOT

(51) International classification	:H04L0029080000, G08G0001096500, G08B0005360000, G06Q0050100000, H04W0004800000
(31) Priority Document No	:NA
(32) Priority Date	:NA
(33) Name of priority country	:NA
(86) International Application No	:NA
Filing Date	:NA
(87) International Publication No	: NA
(61) Patent of Addition to Application Number	:NA
Filing Date	:NA
(62) Divisional to Application Number	:NA
Filing Date	:NA

(71)**Name of Applicant :**
1)Dr.S.Vinodhkumar, Rajalakshmi Engineering College, Chennai
Address of Applicant :Associate Professor Department of CSE, Rajalakshmi Engineering College, Chennai. Tamil Nadu India
2)Dr.M.Senbagavalli, Alliance University, Bangalore
3)Dr.K.Ramalakshmi, Alliance University, Bangalore
4)Dr. Hemalatha Gunasekaran
5)Mr. Venkatesan K, St. Joseph's College of Engineering, Chennai
6)Dr.S.Balakrishnan, Sri Krishna College of Engineering and Technology
(72)**Name of Inventor :**
1)Dr.S.Vinodhkumar, Rajalakshmi Engineering College, Chennai
2)Dr.M.Senbagavalli, Alliance University, Bangalore
3)Dr.K.Ramalakshmi, Alliance University, Bangalore
4)Dr. Hemalatha Gunasekaran
5)Mr. Venkatesan K, St. Joseph's College of Engineering, Chennai
6)Dr.S.Balakrishnan, Sri Krishna College of Engineering and Technology

(57) Abstract :
Traffic congestion is a growing problem everyone faces in their daily life. Traffic congestion has become the newly generated conundrum in metropolitan cities of India. Internet of Things is an environment of smart devices which are always, anywhere and anytime connected with each other while sending and receiving some data or information which can further be processed to generate meaningful analytic results. In this work, we proposed an IOT based system for providing clearance to any emergency vehicle with the aid of employing RFID technology by turning all the red lights to green on the path of the emergency vehicle. And also, we are using an IR sensor that can measure the heat of an object as well as detects the motion.

No. of Pages : 5 No. of Claims : 3

(12) PATENT APPLICATION PUBLICATION
(21) Application No.202141022951 A
(19) INDIA
(22) Date of filing of Application :23/05/2021
(43) Publication Date : 11/06/2021

(54) Title of the invention : Analyser for Online Aspect Based Sentiment Analysis in Social Media.

(51) International classification	:G06F0040300000, G06Q0050000000, G06Q0030020000, G06N0020000000, G06F0040284000
(31) Priority Document No	:NA
(32) Priority Date	:NA
(33) Name of priority country	:NA
(86) International Application No	:PCT//
Filing Date	:01/01/1900
(87) International Publication No	: NA
(61) Patent of Addition to Application Number	:NA
Filing Date	:NA
(62) Divisional to Application Number	:NA
Filing Date	:NA

(71)**Name of Applicant :**
1)Dr. Mary Sowjanya Alamanda (Assistant Professor)
Address of Applicant :Department of Computer Science and Systems Engineering, Andhra University College of Engineering (A)Visakhapatnam-530017, Andhra Pradesh, India. E-mail: sowmaa@yahoo.com Andhra Pradesh India
2)Ms. Srividya Kotagiri (Assistant Professor)
(72)**Name of Inventor :**
1)Dr. Mary Sowjanya Alamanda (Assistant Professor)
2)Ms. Srividya Kotagiri (Assistant Professor)

(57) Abstract :
ABSTRACT Our Invention, Analyser for Online Aspect Based Sentiment Analysis in Social media fore-commerce websites, customer reviews have become extremely important to acquire business insights relating to merits and demerits of their products and services. The Sentiment Analysis also known as Opinion Mining has been found to be highly useful in this area. Aspect Based Sentiment Analysis (ABSA) identifies not only the sentiments of customers but also the quality of service and other related useful information. This invention also provides Sentiment Analysis of Twitter information that can be used to monitor real events such as political events or business stock-market movements. This is an automated extraction of expressions of positive, negative or neutral attitudes from text has received considerable attention from invention during the past decade. The invention is useful for growing internet users with innovative technologies using real-time online review sites, social networks and personal blogs to express their opinions. The tools provided by natural language processing and deep learning /machine learning along with other direct programming tools to work with large volumes of text, makes it possible to begin extracting sentiments from social media. This works on Twitter social media and gives the polarity which can be used in product profiling, trend analysis and forecasting. The promising results have shown that this approach can be further developed to cater business environment needs through sentiment analysis in social media.

No. of Pages : 16 No. of Claims : 7

(12) PATENT APPLICATION PUBLICATION
(21) Application No.202141022953 A
(19) INDIA
(22) Date of filing of Application :23/05/2021
(43) Publication Date : 11/06/2021

(54) Title of the invention : BUOYANCY EFFECTS ON MHD CHEMICALLY REACTING AND RADIATING CASSON FLUID PAST A PERMEABLE STRETCHING SHEET IN A POROUS MEDIUM

(51) International classification	:G06F0030200000, G06F0119080000, F04D0017160000, F01D0001360000, G06F0017100000
(31) Priority Document No	:NA
(32) Priority Date	:NA
(33) Name of priority country	:NA
(86) International Application No	:PCT//
Filing Date	:01/01/1900
(87) International Publication No	: NA
(61) Patent of Addition to Application Number	:NA
Filing Date	:NA
(62) Divisional to Application Number	:NA
Filing Date	:NA

(71)**Name of Applicant :**
1)Dr. Y. HARI KRISHNA
Address of Applicant :ASSISTANT PROFESSOR, DEPARTMENT OF HUMANITIES AND SCIENCE, ANURAG ENGINEERING COLLEGE, ANANTHAGIRI (V), KODAD,SURYAPET,TELANGANA-508 206 Telangana India
2)Dr. Y. SUNITA RANI
3)Dr.M.V.RAMANA MURTHY
4)Dr. N. VIJAYA
5)Dr.K.JAYASANKAR
(72)**Name of Inventor :**
1)Dr. Y. HARI KRISHNA
2)Dr. Y. SUNITA RANI
3)Dr.M.V.RAMANA MURTHY
4)Dr. N. VIJAYA
5)Dr.K.JAYASANKAR

(57) Abstract :
The upfront intension of this study is to explore theoretical influence of combined effects of thermal and solute buoyancy forces of Casson fluid due to porous elongated surface considering thermal radiation, heat source and chemical reaction into account for suction and injection. Basic governing equations of the flow are mathematically modeled basing upon the Casson constitutive equations. Later these were transmuted to dimensionless equations by inducing suitable similarity variables. The moderate Runge- Kutta Fehlberg shooting technique method is applied to plot the graphs. With the aid of these graphs the influence physical parameters velocity, and concentration are discussed. Non Newtonian nature of the fluid is observed from the Casson parameter evidently. Velocity of the fluid diminish for Casson parameter, magnetic parameter, permeability parameter and reverse trend is observed thermal Grashof number, solute Grashof number. profiles decrease for buoyancy forces and Prandtl number where as opposite behaviour can be observed in all remaining cases. Concentration profiles accelerate for Casson parameter, magnetic parameter, permeability parameter, and Prandtl number opposite behavior in remaining cases. Clearly it is observed that the influence of critical parameters on velocity, temperature and concentration profiles attains higher values in the case of injection and lesser values in case of suction. Impact of skin friction, Sherwood and Nusselt numbers on the flow for diverse critical parameters are exposed realistically via graphs.

No. of Pages : 27 No. of Claims : 8

(12) PATENT APPLICATION PUBLICATION
(19) INDIA
(22) Date of filing of Application :23/05/2021
(21) Application No.202141022954 A
(43) Publication Date : 11/06/2021

(54) Title of the invention : Integration with Student Lifecycle Management with SAP (SLcM)

(51) International classification	:G06Q0050200000, G06F0016230000, G06Q0010100000, G09B0007020000, G09B0007000000
(31) Priority Document No	:NA
(32) Priority Date	:NA
(33) Name of priority country	:NA
(86) International Application No	:PCT//
Filing Date	:01/01/1900
(87) International Publication No	: NA
(61) Patent of Addition to Application Number	:NA
Filing Date	:NA
(62) Divisional to Application Number	:NA
Filing Date	:NA

(71)**Name of Applicant :**
1)Dr. Chethana Sridhar
Address of Applicant :Dept of Computer Applications Sivananda Sarma Memorial RV College , 17, 36th cross Road,26th Main Road, 4th T Block East , Jayanagar Bengaluru, Karnataka 560041 Karnataka India
2)Dr. T.Milton
3)Dr. A.BALAMURUGAN
4)Ashwini M Chalawadi
5)D Sandhya
6)Dr. Suresh M B
7)Dr Dinesh H A
8)Krupa R
9)Dr. Manoj H M
(72)**Name of Inventor :**
1)Dr. Chethana Sridhar
2)Dr. T.Milton
3)Dr. A.BALAMURUGAN
4)Ashwini M Chalawadi
5)D Sandhya
6)Dr. Suresh M B
7)Dr Dinesh H A
8)Krupa R
9)Dr. Manoj H M

(57) Abstract :
The Invention discloses a Novel system empowered with predictive analysis for student relationship and improvements, Various aspects in relation to student™s performance are considered as inputs, effects of these inputs on students™ performance are monitored and if any corrections are required, mentors are informed for necessary action. Improvements in the student™s behaviour is assured using student lifecycle management, the invention also has an alumni module which monitors the progress of student even after graduation.

No. of Pages : 11 No. of Claims : 1

(12) PATENT APPLICATION PUBLICATION
(21) Application No.202141022963 A
(19) INDIA
(22) Date of filing of Application :23/05/2021
(43) Publication Date : 11/06/2021

(54) Title of the invention : A Novel Data Security System using Hybrid Cloud Computing

(51) International classification	:H04L0029080000, H04L0012260000, H04L0012240000, H04L0029060000, G06F0009500000
(31) Priority Document No	:NA
(32) Priority Date	:NA
(33) Name of priority country	:NA
(86) International Application No	:PCT//
Filing Date	:01/01/1900
(87) International Publication No	: NA
(61) Patent of Addition to Application Number	:NA
Filing Date	:NA
(62) Divisional to Application Number	:NA
Filing Date	:NA

(71)**Name of Applicant :**
1)Shaik Mohammed Rafi
Address of Applicant :Assistant Professor, ECE Department, Sai Rajeswari Institute of Technology, Lingapuram, Proddatur Andhra Pradesh India
2)Dr.Purnendu Shekhar Pandey
3)G. Venkata Ramana Reddy
4)Dr Varun V L
5)Mr. Sankararao Majji
6)Dr. Harikumar Pallathadka
7)Dr.J Suresh Goud
8)G.K.Jakir Hussain
9)Dr.Manoranjan Dash
10)Dr Balajee Maram
11)Kaviyaraj R
(72)**Name of Inventor :**
1)Shaik Mohammed Rafi
2)Dr.Purnendu Shekhar Pandey
3)G. Venkata Ramana Reddy
4)Dr Varun V L
5)Mr. Sankararao Majji
6)Dr. Harikumar Pallathadka
7)Dr.J Suresh Goud
8)G.K.Jakir Hussain
9)Dr.Manoranjan Dash
10)Dr Balajee Maram
11)Kaviyaraj R

(57) Abstract :

Abstract: Computer without network connectivity is an exception today. Earlier on everyone was using the computer to solve its individual problem. Now a day these problem related application are not available on the standalone desktop, these application are working as a client server application. In this system, server part is available at some remote machine while the client part is available at user˜s machine. Cloud computing is implemented using the four deployment models private cloud, public cloud, cloud hybrid and community cloud. Some of the user organization feels that the data can be misused by the company who owned the infrastructure. As a result, either they do not use the cloud services hosted on public cloud or the use only some limited services, so negate the use of cloud computing to a great extent. The solution to this is provided by the evolution of hybrid cloud. The corporate that feels security as one of the major issue in migration to cloud computing makes the use of hybrid cloud for their usage.

No. of Pages : 6 No. of Claims : 6

(12) PATENT APPLICATION PUBLICATION
(21) Application No.202141022983 A
(19) INDIA
(22) Date of filing of Application :24/05/2021
(43) Publication Date : 11/06/2021

(54) Title of the invention : A NOVEL MATERIAL FABRICATION TO DETECT BREAST CANCER USING DEEP NOVEL CLASSIFICATION MECHANISM

(51) International classification	:G06T0007000000, A61B0006000000, G06T0007440000, G16H0030400000, G06T0005100000
(31) Priority Document No	:NA
(32) Priority Date	:NA
(33) Name of priority country	:NA
(86) International Application No	:PCT//
Filing Date	:01/01/1900
(87) International Publication No	: NA
(61) Patent of Addition to Application Number	:NA
Filing Date	:NA
(62) Divisional to Application Number	:NA
Filing Date	:NA

(71)**Name of Applicant :**
1)Dr. J. VENKATESH
Address of Applicant :PROFESSOR, DEPARTMENT OF CSE, CHENNAI INSTITUTE OF TECHNOLOGY, SARATHY NAGAR, KUNDRATHUR, CHENNAI-69. Tamil Nadu India
2)Dr. ANITA TITUS
3)Dr. R. JANARTHANAN
4)Mrs. C.ANITHA
5)Dr. CHIRRA KESAVA REDDY
6)Mr. RANJITH S
(72)**Name of Inventor :**
1)Dr. J. VENKATESH
2)Dr. ANITA TITUS
3)Dr. R. JANARTHANAN
4)Mrs. C.ANITHA
5)Dr. CHIRRA KESAVA REDDY
6)Mr. RANJITH S

(57) Abstract :
Breast Cancer is a serious cause in the world, and it raises the death ratio in a drastic manner. Most of the women are suffered due to this kind of breast cancer disease, in which several kinds of literature are available regarding this breast cancer identification, but all are struck over a certain level. Lots of researchers in the industry providing different digital image processing schemes to identify Breast Cancer in a clear manner to save the lives of women but all are struck with real-world prediction scenarios. For Breast Cancer identification mammography is a well-known technique, in which it screens the breast cancer cells in a clear manner. However, based on the workload and manual expertise failures, numerous failures and wrong classification procedures reported as well. So, that a novel computer-assisted digital image processing technique and the smart tool are required to provide intelligent prediction logics to identify breast cancer in earlier conditions instead of detecting that in complex stages. In this paper, a novel Deep Learning enabled Image Processing tool is designed, called as Digital Image Processing Scheme enabled Smart Kit (DIPSK) to identify the breast cancer disease effectively in earlier stages without any human intervention.

No. of Pages : 23 No. of Claims : 7

(12) PATENT APPLICATION PUBLICATION
(21) Application No.202141022988 A
(19) INDIA
(22) Date of filing of Application :24/05/2021
(43) Publication Date : 11/06/2021

(54) Title of the invention : WORKOUT PLANS FOR COORDINATING CARDIOVASCULAR AND MUSCLOSKELETAL SESSIONS

(51) International classification	:G09B0019000000, A63B0022020000, A63B0024000000, A63B0022000000, A63B0021002000
(31) Priority Document No	:NA
(32) Priority Date	:NA
(33) Name of priority country	:NA
(86) International Application No	:PCT//
Filing Date	:01/01/1900
(87) International Publication No	: NA
(61) Patent of Addition to Application Number	:NA
Filing Date	:NA
(62) Divisional to Application Number	:NA
Filing Date	:NA

(71)**Name of Applicant :**
1)Dr. S. SETHU,Assistant Professor, Department of Physical Education and Sports
Address of Applicant :Assistant Professor, Department of Physical Education and Sports, Manonmaniam Sundaranar University Tirunelveli Tamilnadu India 627012 Tamil Nadu India
2)Dr. A. S. NAGESWARAN ,Director, Council for College & Curriculum Development
3)Mr. R. RAMAKRISHNAN,Research Scholar, Department of Physical Education and Sports
4)Ms. M. GANESHWARI,Research Scholar, Department of Physical Education and Sports
(72)**Name of Inventor :**
1)Dr. S. SETHU,Assistant Professor, Department of Physical Education and Sports
2)Dr. A. S. NAGESWARAN ,Director, Council for College & Curriculum Development
3)Mr. R. RAMAKRISHNAN,Research Scholar, Department of Physical Education and Sports
4)Ms. M. GANESHWARI,Research Scholar, Department of Physical Education and Sports

(57) Abstract :
The technique to decide exercise schedule and session for an individual vary. Based on the individual contribution and decide first-hand exercise info to decide a majority of exercise needs for the main sort of exercise plan. The principal kind of exercise depends on individual contribution and portray the exercise plan including the exercise schedule session for the first and second sorts of exercises. This also allows a more favourable interaction of the musculoskeletal system and the skeletal muscle pump, and delivers an increase in cardiac and peripheral muscle perfusion, as well. It improves physiological efficiency and decreases myocardial stress, which results in increased individual performance, health, and safety when combined with physical activity. Thus, it prevents the contracting and relaxing muscle from operating in conjunction with the pumping during any kind of physical activity.

No. of Pages : 9 No. of Claims : 5

(12) PATENT APPLICATION PUBLICATION
(21) Application No.202141022991 A
(19) INDIA
(22) Date of filing of Application :24/05/2021
(43) Publication Date : 11/06/2021

(54) Title of the invention : FALL DETECTION AND AVOIDANCE SYSTEM FOR OLDSTERS

(51) International classification	:G08B0021040000, A61B0005000000, G16H0010600000, G08B0025010000, G06Q0050220000
(31) Priority Document No	:NA
(32) Priority Date	:NA
(33) Name of priority country	:NA
(86) International Application No	:PCT//
Filing Date	:01/01/1900
(87) International Publication No	: NA
(61) Patent of Addition to Application Number	:NA
Filing Date	:NA
(62) Divisional to Application Number	:NA
Filing Date	:NA

(71)**Name of Applicant :**
1)Dr. Kalpana Murugan
Address of Applicant :Professor and Head, Department of Electronics and Communication Engineering Kalasalingam Academy of Research And Education, Anand Nagar, Krishnankoil-626126, Tamil Nadu, India Tamil Nadu India
2)Dr. V. Muneeswaran
3)Mr. Sadda Ashok Reddy
4)Mr. Rachakonda Dharmendra
5)Mr. Shaik Imran
(72)**Name of Inventor :**
1)Dr. Kalpana Murugan
2)Dr. V. Muneeswaran
3)Mr. Sadda Ashok Reddy
4)Mr. Rachakonda Dharmendra
5)Mr. Shaik Imran

(57) Abstract :
Senior individuals dealing with significant clinical issues by tumbling down. Particularly when they are living alone, old individuals will in general harm themselves from tumbling down more regularly. During the time of fall occurred, there is a need for clinical regard to be given quickly to minimize the danger of faller from getting serious. Such countless advancement has been created which some are used webcams to screen the exercises of elderly folks individuals. Besides, the expense of working and establishment is high and it is just pertinent for a home unit or restricted inside unit. Security issues have been shown up by a few clients. Current popularized gadget needed for the client to wear remote crisis transmitter on the body in type of pendant and wristband. In this strategy, because of continuous swing and development of the gadget, it shows a high bogus alert. This undertaking proposed a fall identification framework which is practical and dependable to identify fall and caution close by medical services community or family members for help and backing. For fall recognition, an accelerometer and whirligig were utilized to identify the speed increase and body slant point of the faller separately. By coupling the accelerometer with a whirligig, the exactness of the framework was improved because of decreasing in bogus positives and genuine negatives. Additionally, this wearable device requires less execution cost and gives a speedy reaction. Thus, this fall identification and ready framework has the sensitivity and specificity of 95% and 90% separately. Be that as it may, the limit of this device can't distinguish a user falling against a wall and falling end in sitting position. Suggestion for future work is to build up an intuitive presentation which empowers users to enter close by medical services place and relative's phone number.

No. of Pages : 7 No. of Claims : 4

(12) PATENT APPLICATION PUBLICATION
(21) Application No.202141023019 A
(19) INDIA
(22) Date of filing of Application :24/05/2021
(43) Publication Date : 11/06/2021

(54) Title of the invention : SMART IRRIGATION SYSTEM USING INDUSTRIAL INTERNET OF THINGS (IIOT)

(51) International classification	:A01G0025160000, A01C0023040000, A01G0025060000, G05B0015020000, A01G0027020000
(31) Priority Document No	:NA
(32) Priority Date	:NA
(33) Name of priority country	:NA
(86) International Application No	:PCT//
Filing Date	:01/01/1900
(87) International Publication No	: NA
(61) Patent of Addition to Application Number	:NA
Filing Date	:NA
(62) Divisional to Application Number	:NA
Filing Date	:NA

(71)**Name of Applicant :**
1)MR. S. SRINIVASAN
Address of Applicant :ASSISTANT PROFESSOR, DEPARTMENT OF AGRICULTURE ENGINEERING, NEHRU INSTITUTE OF TECHNOLOGY, JAWAHAR GARDENS • , KALIAPURAM, THIRUMALAYAMPALAYAM (PO), COIMBATORE- 641105, TAMILNADU, INDIA E-MAIL: srinitech2k@gmail.com Tamil Nadu India
2)MRS. GULJA S NAIR
3)MR. R. BHARATHIKANNA
4)MR. A. C. RAMKUMAR
5)MR. N. MOHAMMED RAFFIC
6)MR. A.S. RAJAN
7)MR. S. RADHAKRISHNAN
8)MR. P. SIVA
9)MR. A. BALTHILAK
10)DR. C. MADHUSUDAN NAYAK
11)Mr.N.Nagarajan
(72)**Name of Inventor :**
1)MR. S. SRINIVASAN
2)MRS. GULJA S NAIR
3)MR. R. BHARATHIKANNA
4)MR. A. C. RAMKUMAR
5)MR. N. MOHAMMED RAFFIC
6)MR. A.S. RAJAN
7)MR. S. RADHAKRISHNAN
8)MR. P. SIVA
9)MR. A. BALTHILAK
10)DR. C. MADHUSUDAN NAYAK

(57) Abstract :
Irrigation is the process of applying water to the crops artificially to fulfill their water requirements. The frequency, rate, amount and time of irrigation are different for different crops and also vary according to the types of soil and seasons. In traditional methods efficiency is poor because of the uneven distribution of water. Also, the chances of water loss are very high. The modern method Sprinkler system and Drip system helps in the proper way of water usage. Irrigation should be optimum because even over-irrigation can spoil the crop production. Excess water leads to waterlogging, hinder germination, increased salt concentration and uprooting because roots can™t withstand standing water. Thus the proper irrigation method is to be used for the best cultivation. Sprinkler and drip irrigation system lags in controlling excess water and nutritional level of soil level. These system consumes excessive energy (pump should be operated continuously), does not fulfill water requirements of crops based on season. In this invention, irrigation system is designed such a way that crops get exact water and nutrients at specific location immediately when shortage occurs. Irrigation system takes care of seasonal changes, weather conditions, age of crop and can be monitored and operated remotely.

No. of Pages : 9 No. of Claims : 4

(12) PATENT APPLICATION PUBLICATION
(19) INDIA
(22) Date of filing of Application :24/05/2021

(21) Application No.202141023148 A
(43) Publication Date : 11/06/2021

(54) Title of the invention : Smart Socket- An Technology Enabler To Prevent Electrical Hazards in Household Applications

(51) International classification	:H02J0007000000, H01R0013660000, H04L0029080000, H02J0007020000, A61K0031410000
(31) Priority Document No	:NA
(32) Priority Date	:NA
(33) Name of priority country	:NA
(86) International Application No	:PCT//
Filing Date	:01/01/1900
(87) International Publication No	: NA
(61) Patent of Addition to Application Number	:NA
Filing Date	:NA
(62) Divisional to Application Number	:NA
Filing Date	:NA

(71)**Name of Applicant :**
1)Dr. V. Muneeswaran
Address of Applicant :Assistant Professor, Department of Electronics and Communication Engineering Kalasalingam Academy of Research And Education, Anand Nagar, Krishnankoil-626126, Tamil Nadu, India Tamil Nadu India
2)Dr. Kalpana Murugan
3)Mr. Mangala Madhu
4)Mr. G. Siddu Sai Shareef
5)Mr. Guttapalli Pavan Kumar
6)Mr. Gudipati Harsha Vardhan
(72)**Name of Inventor :**
1)Dr. V. Muneeswaran
2)Dr. Kalpana Murugan
3)Mr. Mangala Madhu
4)Mr. G. Siddu Sai Shareef
5)Mr. Guttapalli Pavan Kumar
6)Mr. Gudipati Harsha Vardhan

(57) Abstract :
Power is a crucial electrical amount and nowadays everything in an exceedingly and also world depends on having the ability to stay them running. Because of industrial growth & urbanization power may be a basic would like of our life. Within the gifted situation of electricity conservation, associated degree of automatic charger is provided capable of charging many removable batteries comprising a block for activity power from the mains and several other battery charging modules. A while some have a tendency to simply place the charging and could not monitor the mobile when obtaining 100% charging ,in order to overcame this downside a brand new methodology referred to as smart socket • it ought to conserve the ability and avoid the wastage of electricity when obtaining 100% of charge.

No. of Pages : 6 No. of Claims : 4

(12) PATENT APPLICATION PUBLICATION
(19) INDIA
(22) Date of filing of Application :24/05/2021

(21) Application No.202141023154 A
(43) Publication Date : 11/06/2021

(54) Title of the invention : Investigation on PV Fed Hybrid Electric Vehicles with Various Power Electronic Circuits

(51) International classification	:B60W0010080000, B60L0058100000, B60L0058120000, B60L0050600000, B60L0015200000
(31) Priority Document No	:NA
(32) Priority Date	:NA
(33) Name of priority country	:NA
(86) International Application No	:PCT//
Filing Date	:01/01/1900
(87) International Publication No	: NA
(61) Patent of Addition to Application Number	:NA
Filing Date	:NA
(62) Divisional to Application Number	:NA
Filing Date	:NA

(71)**Name of Applicant :**

1)Srinivas Cheera, Research Scholar / Department of EEE, University College of Engineering, Osmania University

Address of Applicant :University College of Engineering, Osmania University, Hyderabad, Telangana- 500007 Telangana India

2)B. Srikanth Goud, Assistant Professor / Department of EEE, Anurag College of Engineering

3)Seelam VSV Prabhu Deva Kumar, Assistant Researcher /R&D Center, JoongAng Control Co., Ltd

4)Dr.CH.Naga Sai kalyan,Assistant professor/Department of EEE, Vasireddy Venkatadri Institute of Technology.

5)Dr. K.V.G Raghavendra , Sustainable Energies Research and Project Consultant/Nextgen Management consultancy

6)Kiran Kommireddy,Assistant Engineer / Mechanical Maintenance

7)A.N Venkateswarlu, Associate Professor/Department of EEE, Vignan's Lara Institute of Technology and Science

8)Dr. Gaurav Srivastava,Assistant professor/Department of EEE, Poornima College of Engineering

(72)**Name of Inventor :**

1)Srinivas Cheera, Research Scholar / Department of EEE, University College of Engineering, Osmania University

2)B. Srikanth Goud, Assistant Professor / Department of EEE, Anurag College of Engineering

3)Seelam VSV Prabhu Deva Kumar, Assistant Researcher /R&D Center, JoongAng Control Co., Ltd

4)Dr.CH.Naga Sai kalyan,Assistant professor/Department of EEE, Vasireddy Venkatadri Institute of Technology.

5)Dr. K.V.G Raghavendra , Sustainable Energies Research and Project Consultant/Nextgen Management consultancy

6)Kiran Kommireddy,Assistant Engineer / Mechanical Maintenance

7)A.N Venkateswarlu, Associate Professor/Department of EEE, Vignan's Lara Institute of Technology and Science

8)Dr. Gaurav Srivastava,Assistant professor/Department of EEE, Poornima College of Engineering

(57) Abstract :

Abstract The detailed investigation on PV fed hybrid electric vehicles with energy storage system. Significant growth of sustainable energy system leads to development of transportation sector with clean energy sources for better environment condition. Recent configuration in hybrid vehicle system along with merits and demerits further, battery management system and various power converter topologies for electric vehicle system are presented for enhancing the performance and reliability of the vehicles. Various operating modes are identified with various electrical parameters and presented for efficient power conversion.

No. of Pages : 17 No. of Claims : 5

(12) PATENT APPLICATION PUBLICATION
(21) Application No.202141023187 A
(19) INDIA
(22) Date of filing of Application :24/05/2021
(43) Publication Date : 11/06/2021

(54) Title of the invention : A PROBIOTIC COMPOSITION FOR MAKING BEAD FOR POULTRY

(51) International classification	:A61K0035744000, A23P0010300000, A23K0010180000, A61K0035742000, A61K0009500000
(31) Priority Document No	:NA
(32) Priority Date	:NA
(33) Name of priority country	:NA
(86) International Application No	:PCT//
Filing Date	:01/01/1900
(87) International Publication No	: NA
(61) Patent of Addition to Application Number	:NA
Filing Date	:NA
(62) Divisional to Application Number	:NA
Filing Date	:NA

(71)**Name of Applicant :**
1)TAMILNADU VETERINARY AND ANIMAL SCIENCES UNIVERSITY
Address of Applicant :Tamil Nadu Veterinary and Animal Sciences University, Madhavaram Milk colony, Chennai Tamil Nadu India
(72)**Name of Inventor :**
1)Mr.K. ARULKUMAR
2)Dr.R.P.ARAVINDHBABU
3)Dr.S. THIYAGARAJAN
4)Dr.P. AZHAHIANAMBI
5)Dr.T.M.A. SENTHILKUMAR
6)Dr.G. DHINAKAR RAJ

(57) Abstract :
A probiotic composition for making bead for poultry relates to a probiotic composition with the core comprising one or more probiotic microorganisms selected from Bacillus subtilis, Bacillus firmus, Enterococcus faecium, Enterococcus faecalis, Saccharomyces cerevisiae or mixture thereof ; an enteric coating layer encapsulating the core; a cross linking film for cross linking the enteric coating layer with the cross linking film for cross linking the enteric coating layer with the cross linking film to form a protective layer. The composition is capable of bacterial cell viability, bacterial cell stability, particle size uniformity, intestinal targeting and long shell life.

No. of Pages : 38 No. of Claims : 17

(12) PATENT APPLICATION PUBLICATION
(21) Application No.202141023192 A
(19) INDIA
(22) Date of filing of Application :25/05/2021
(43) Publication Date : 11/06/2021

(54) Title of the invention : DESIGN AND IMPLEMENTATION OF EFFICIENT ALGORITHMS FOR CONTENT BASED IMAGE RETRIEVAL USING LOCAL PATTERNS BASED FEATURE DESCRIPTORS

(51) International classification	:G06K0009460000, G06F0016583000, G06K0009620000, G06T0007900000, G09G0003340000
(31) Priority Document No	:NA
(32) Priority Date	:NA
(33) Name of priority country	:NA
(86) International Application No	:PCT//
Filing Date	:01/01/1900
(87) International Publication No	: NA
(61) Patent of Addition to Application Number	:NA
Filing Date	:NA
(62) Divisional to Application Number	:NA
Filing Date	:NA

(71)**Name of Applicant :**
1)Dr. Bhaskar Reddy P.V.
Address of Applicant :Professor, School of Computing and Information Technology, REVA University, Bengaluru, India Karnataka India
2)Dr. M Prabaker
3)Dr. J Manoranjini
4)Dr. J Sasi Bhanu
5)Y J SUDHA RANI
6)ANIL KUMAR SAGGU RENUKA
(72)**Name of Inventor :**
1)Dr. Bhaskar Reddy P.V.
2)Dr. M Prabaker
3)Dr. J Manoranjini
4)Dr. J Sasi Bhanu
5)Y J SUDHA RANI
6)ANIL KUMAR SAGGU RENUKA

(57) Abstract :
A new image retrieval algorithm by integrating color and texture features. In the present work to improve retrieval performance multiple features are presented i.e. Directional Binary Wavelet Patterns (DBWP) based texture features combined with color feature such as HSV color histogram. For color feature, first the RGB image is converted to HSV image, and then histograms are constructed from HSV spaces. For texture feature, an 8-bit grayscale image is divided into eight binary bit-planes, and then Binary Wavelet Transform (BWT) on each bitplane to extract the multi-resolution binary images. The Local Binary Pattern (LBP) features are extracted from the resultant BWT sub-bands. A large MIT VisTex database and Corel database images are used to check the retrieval performance. Experimental results have shown that the performance of the CBIR system using color and texture features is superior when compared to CBIR algorithm using only texture features or CBIR algorithm using color features alone

No. of Pages : 23 No. of Claims : 2

(12) PATENT APPLICATION PUBLICATION
(21) Application No.202141023349 A
(19) INDIA
(22) Date of filing of Application :25/05/2021
(43) Publication Date : 11/06/2021

(54) Title of the invention : E-HEALTH SYSTEM WITH CLINICAL DOCUMENT ARCHITECTURE (CDA)

(51) International classification	:G16H0010200000, G16H0010600000, G06Q0050220000, G16H0050200000, H04L0029080000
(31) Priority Document No	:NA
(32) Priority Date	:NA
(33) Name of priority country	:NA
(86) International Application No	:PCT//
Filing Date	:01/01/1900
(87) International Publication No	: NA
(61) Patent of Addition to Application Number	:NA
Filing Date	:NA
(62) Divisional to Application Number	:NA
Filing Date	:NA

(71)**Name of Applicant :**
1)Dr. R. SARAVANAN
Address of Applicant :ASSOCIATE PROFESSOR DEPARTMENT OF INFORMATION TECHNOLOGY CHENNAI INSTITUTE OF TECHNOLOGY SARATHY NAGAR, PUDUPEDU VILLAGE, SH-113, KUNDRATHURSRIPERUMBUDUR MAIN ROAD, KUNDRATHUR, CHENNAI, KANCHIPURAM DISTRICT, TAMIL NADU, INDIA. PIN 600 069. Tamil Nadu India
2)Dr. R. JANARTHANAN
3)Dr. B. SUNDARAMBAL
4)Dr. K. SOMASUNDARAM
5)Dr. K. SURESH
6)Dr. K. ANAND
(72)**Name of Inventor :**
1)Dr. R. SARAVANAN
2)Dr. R. JANARTHANAN
3)Dr. B. SUNDARAMBAL
4)Dr. K. SOMASUNDARAM
5)Dr. K. SURESH
6)Dr. K. ANAND

(57) Abstract :
ABSTRACT E-HEALTH SYSTEM WITH CLINICAL DOCUMENT ARCHITECTURE (CDA) E-healthcare systems have been progressively working with ailment observing, sickness demonstrating and early intercession, and proof based clinical therapy by clinical content mining and picture include extraction. Proposed framework screens the ailment and gives clinical treatment through our web application. To safely share the Public Health Report (PHR) data in cloud computing, a patient partitions his PHR data M into two sections: individual data m1 that may contain the patient's name, government managed retirement number, phone number, personal residence, and so on The clinical record m2 doesn't contain delicate individual data, for example, clinical trial results, treatment conventions, and activity notes. The layered admittance structures present in the proposed framework are coordinated into a solitary access construction, and afterward, the progressive documents are scrambled with the incorporated admittance structure. In this way, both code text stockpiling and time cost of encryption is saved in the proposed framework, for cloud storage we will utilize Cloud-Me. An effective record pecking order characteristic based encryption conspire is utilized in the cloud computing. Encryption innovation is utilized to tackle the difficult issue of the got information partaking in Health care framework (HES) to address these issues HES structure is planned that gathers clinical information from Wireless Body Area Networks(WBANs). The model execution of HES is investigated to check the attainability, proposed framework faces numerous difficulties which incorporates the data security and protection conservation. Thus, it will diminish the time and cost of the encryption and furthermore lessens the cloud storage by utilizing the cloud-Me.

No. of Pages : 27 No. of Claims : 9

(12) PATENT APPLICATION PUBLICATION
(19) INDIA
(22) Date of filing of Application :25/05/2021

(21) Application No.202141023368 A
(43) Publication Date : 11/06/2021

(54) Title of the invention : A compact IOT based Indoor air monitoring system

(51) International classification	:C12N0005070000, E04H0001120000, B01D0053620000, A61L0009160000, G08B0027000000
(31) Priority Document No	:NA
(32) Priority Date	:NA
(33) Name of priority country	:NA
(86) International Application No	:PCT//
Filing Date	:01/01/1900
(87) International Publication No	: NA
(61) Patent of Addition to Application Number	:NA
Filing Date	:NA
(62) Divisional to Application Number	:NA
Filing Date	:NA

(71)**Name of Applicant :**
1)Dr. Pramod M S
Address of Applicant :Designation: Associate Professor Department: Electronics and Communication Engineering PES University, Electronic City Campus, Hosur Rd, Bengaluru, Karnataka 560100 Karnataka India
2)Sreelakshmi T K
3)Dr. Nitin Jagannath Patil
4)Sathisha B M
5)Dr. Vasanthakumar G U
6)Yogitha R
7)Sadashiva V. Chakrasali
8)Dr. Sunitha Y N
(72)**Name of Inventor :**
1)Dr. Pramod M S
2)Sreelakshmi T K
3)Dr. Nitin Jagannath Patil
4)Sathisha B M
5)Dr. Vasanthakumar G U
6)Yogitha R
7)Sadashiva V. Chakrasali
8)Dr. Sunitha Y N

(57) Abstract :
The Internet of Things has been demonstrating its capability to take care of issues where presence of data can contribute enormous to an answer or become the actual arrangement. An entire reach of associated things, conversing with one another can convey handled data to individuals that would help them in showing up at significant decisions about unique, yet significant components. One such factor is air and its quality. In a populace thick world and taking a gander at the patterns in the quantity of causalities due to messy air it is profoundly significant that individuals are educated regarding the nature of air that they relax. Indoor air quality is a very significant factor to be judged and dissected and the requirement for an compelling answer for do so is unavoidable. With air purifiers being ready to clean the air inside, there is no space for clients to check the consistency of such an interaction and no arrangement to contemplate the long time conduct of air they get to breath. The proposed system that would make clients study the air around them both continuously and throughout some undefined time frame would be introduced. An assortment of contamination focuses would be estimated and educated to clients, cautioning clients in this manner of probably the most destructive contamination focuses.

No. of Pages : 11 No. of Claims : 2

(12) PATENT APPLICATION PUBLICATION
(21) Application No.202141023369 A
(19) INDIA
(22) Date of filing of Application :25/05/2021
(43) Publication Date : 11/06/2021

(54) Title of the invention : Automated ayurvedic device for Kayasheka- Pizzicchil therapeutic procedure

(51) International classification	:A61M0021000000, G01N0035100000, E03C0001040000, A61H0001000000, G01N0035000000	(71)**Name of Applicant :** **1)Dr H Pampanna Gouda** Address of Applicant :#107/12 Near Kalmat, Reddy Street, Bellary-583101 Karnataka India **2)Dr Seema MB** **3)Hirehal Neha** **4)Hirehal Nayan**
(31) Priority Document No	:NA	
(32) Priority Date	:NA	
(33) Name of priority country	:NA	(72)**Name of Inventor :**
(86) International Application No	:PCT//	**1)Dr H Pampanna Gouda**
Filing Date	:01/01/1900	**2)Dr Seema MB**
(87) International Publication No	: NA	**3)Hirehal Neha**
(61) Patent of Addition to Application Number	:NA	**4)Hirehal Nayan**
Filing Date	:NA	
(62) Divisional to Application Number	:NA	
Filing Date	:NA	

(57) Abstract :
Apparatus and method for automated ayurvedic therapeutic device for Kayasheka(pizzicchil) treatment to a human body, the said automated device further comprises of a plurality of dispensing arm which dispenses the medicated liquids on the human body in a rain shower method and the dispensing arm is supported by a ceiling above the dispensing the arm, the medicated liquids is heated to predetermine time and temperature with the help of the main central unit which further consists of heating panel, sensors. This apparatus is fixed to a conventional droni system in which the human body is placed, the medicated liquid is dispensed though the rain shower system which is achieved by the to and fro moment of the dispensing arm.

No. of Pages : 29 No. of Claims : 8

(12) PATENT APPLICATION PUBLICATION
(21) Application No.202141023375 A
(19) INDIA
(22) Date of filing of Application :26/05/2021
(43) Publication Date : 11/06/2021

(54) Title of the invention : A fibre material with moisture retention capacity with thermal tolerance and a method for manufacture of the same

(51) International classification	:D01D0005000000, D01F0001100000, A41D0013005000, A42B0001000000, D06M0011470000	(71)**Name of Applicant :** **1)SRM University - AP** Address of Applicant :SRM University AP, Neerukonda, Mangalagiri, Guntur District, Andhra Pradesh 522502 Andhra Pradesh India
(31) Priority Document No	:NA	(72)**Name of Inventor :**
(32) Priority Date	:NA	**1)Bhuvaneswari Sreelekha**
(33) Name of priority country	:NA	**2)Sabyasachi Mukhopadhyay**
(86) International Application No	:PCT//	
Filing Date	:01/01/1900	
(87) International Publication No	: NA	
(61) Patent of Addition to Application Number	:NA	
Filing Date	:NA	
(62) Divisional to Application Number	:NA	
Filing Date	:NA	

(57) Abstract :
A durable electrospun fiber with thermal tolerance. The Saharan silver ants display a property with their body hair design and mechanism of their survival under high temperatures in the Saharan desert. The nano-structured fiber surface will reflect the heat by mimicking the body hairs of these ants. In addition to it, the supporting core material of the electrospun fiber, which would not make any difference with the other blending material of core; but as an advantage, it stores water droplets similar to a clay pot, which provides a cooling platform at warm environments owing to water evaporation. The developed fabric will provide a cooling effect throughout with less maintenance, and require just a few minutes to load water by emerging in water tank or spraying water on it. These electrospun fibers could be widely used for covering thermal sensitive appliances which need a regular temperature-controlled environment.

No. of Pages : 11 No. of Claims : 3

(12) PATENT APPLICATION PUBLICATION
(19) INDIA
(22) Date of filing of Application :26/05/2021
(21) Application No.202141023385 A
(43) Publication Date : 11/06/2021

(54) Title of the invention : HIGH POWER LITHIUM ION CELLS AND A METHOD FOR PROCESSING THE SAME

(51) International classification	:H01M0010052500, H01M0010440000, H01M0004525000, H01M0010480000, H01M0010058000
(31) Priority Document No	:NA
(32) Priority Date	:NA
(33) Name of priority country	:NA
(86) International Application No	:PCT//
Filing Date	:01/01/1900
(87) International Publication No	: NA
(61) Patent of Addition to Application Number	:NA
Filing Date	:NA
(62) Divisional to Application Number	:NA
Filing Date	:NA

(71)**Name of Applicant :**
1)Indian Space Research Organisation
Address of Applicant :Department of Space, Antariksh Bhavan, New BEL Road, Bangalore 560094 Karnataka India
(72)**Name of Inventor :**
1)Smt. TD Mercy
2)Dr. S Aravamuthan
3)Shri. PS VijayaKumar
4)Smt. Aiswarya Samridh
5)Dr. Bibin John
6)Shri. M Arjun Raj
7)Shri Deepak Srivastava
8)Shri. MD Jamal Nawaz Ansari
9)Shri. K Vijayakumar
10)Shri. V Vinod
11)Shri. S Padmakumar
12)Shri. MR Rajesh Kumar
13)Shri. K Sunil
14)Shri. KT Saju
15)Shri. P Jineesh
16)Shri. K Bineeshlal

(57) Abstract :
The present invention relates to an elliptic cylindrical high-power lithium-ion cell based on Lithium Nickel Cobalt Aluminium Oxide cathode & graphite anode and a method for processing the same. The lithium-ion cell can exhibit discharge rate capability up to 15C in continuous discharge and 50C in pulse discharge with a lower internal resistance. The cell has lower internal resistance (3-4 mÎ (AC impedance at 1 kHz) for a typical 4 Ah cell). The high-power capability is achieved by the combined effect of lower loading level of positive and negative electrodes, use of conducting agents for positive and negative electrodes, use of electrolytes with high ionic conductivity and by adopting laser beam welding for intermediate tab to stack welding. The provided cell is stable against external physical impact such as vibration, shock, falling, and the like, and also provide a method for processing such a cell. Figure-1a

No. of Pages : 26 No. of Claims : 30

(12) PATENT APPLICATION PUBLICATION
(21) Application No.202141023459 A
(19) INDIA
(22) Date of filing of Application :26/05/2021
(43) Publication Date : 11/06/2021

(54) Title of the invention : NOVEL SYNTHESIS AND DFT CALCULATIONS OF 3-PHENYL-2-(1H-TETRAZOL-5-YL)ACRYLAMIDES UNDER CATALYST-FREE, ONE-POT CASCADE REACTION

(51) International classification	:C07D0257040000, G16C0010000000, G16C0020100000, C07D0307680000, H01L0051000000
(31) Priority Document No	:NA
(32) Priority Date	:NA
(33) Name of priority country	:NA
(86) International Application No	:PCT//
Filing Date	:01/01/1900
(87) International Publication No	: NA
(61) Patent of Addition to Application Number	:NA
Filing Date	:NA
(62) Divisional to Application Number	:NA
Filing Date	:NA

(71)**Name of Applicant :**
1)JYOTHIS DEVASIA
Address of Applicant :Department of Chemistry, CHRIST (Deemed to be University), Bengaluru, Karnataka - 560029, India. Karnataka India
2)AATIKA NIZAM
3)SAMPATH CHINNAM
4)SONAM SHAKYA
5)KAVITA KHATANA
6)ARIN NATANIA S
7)HARITHA ARNIPALLI
8)AMRUTHA DAS OLLASERRY
(72)**Name of Inventor :**
1)JYOTHIS DEVASIA
2)AATIKA NIZAM
3)SAMPATH CHINNAM
4)SONAM SHAKYA
5)KAVITA KHATANA
6)ARIN NATANIA S
7)HARITHA ARNIPALLI
8)AMRUTHA DAS OLLASERRY

(57) Abstract :
The present invention offers a novel method for the synthesis of 3-phenyl-2-(1H-tetrazol-5-yl)acrylamides 4(a-g) under catalyst-free conditions. All the reactions were carried out in an one-pot cascade process starting with various aromatic/heteroaryl aldehydes, 2-cyanoacetamide and sodium azide at 110 oC using dimethylformamide (DMF) as a solvent. In addition, the reaction conditions were screened for optimization conditions towards solvent, catalyst, temperature and equivalence of sodium azide. DFT studies using B3LYP/6-311G basis set level of theory were used to provide comparable theoretical data along with MEP map and electronic energy gap of HOMO†'LUMO. Experimental data was justified with DFT using B-3LYP/ 6-311G (basis set) level of theoretical calculations to obtain chemical, structural, spectroscopic, thermodynamic and vibrational phenomena of all the novel synthesized tetrazole analogues. The invention delivers a facile and efficient synthetic protocol, and it has numerous advantages such as low cost of starting substrates, significant improvement of reaction times, less impurities, selective, and avoiding tedious work-up procedures.

No. of Pages : 19 No. of Claims : 12

(12) PATENT APPLICATION PUBLICATION
(21) Application No.202141023485 A
(19) INDIA
(22) Date of filing of Application :26/05/2021
(43) Publication Date : 11/06/2021

(54) Title of the invention : A SYSTEM BASED ON MACHINE LEARNING AND ARTIFICIAL INTELLIGENCE MODULES FOR PROVIDING IOT NETWORK CONFIGURATION THROUGH USER VOICE AND GESTURE AND METHOD THEREOF

(51) International classification	:H04L0029080000, G06N0020000000, G06F0003160000, G10L0015220000, G06N0003080000
(31) Priority Document No	:NA
(32) Priority Date	:NA
(33) Name of priority country	:NA
(86) International Application No	:PCT//
Filing Date	:01/01/1900
(87) International Publication No	: NA
(61) Patent of Addition to Application Number	:NA
Filing Date	:NA
(62) Divisional to Application Number	:NA
Filing Date	:NA

(71)**Name of Applicant :**
1)Mr.S.Jaya Prakash
Address of Applicant :Associate Professor, Department of CSE, Idhaya Engineering College for Women, Chinnasalem, Kallakurichi District, Tamil Nadu, India. Pin Code:606201 Tamil Nadu India
2)Mr.Venkata Subbaiah Desanamukula
3)Dr.Mandadi Srinivas
4)Dr.Kandunuri Ramakrishna
5)Mr.U.Rakesh
6)Mrs.N.L.Aravinda
7)Dr.Sushma Jaiswal
8)Mr.Tarun Jaiswal
9)Dr.A.V.Sudhakara Reddy
10)Mr.N.Naveen Sagar
(72)**Name of Inventor :**
1)Mr.S.Jaya Prakash
2)Mr.Venkata Subbaiah Desanamukula
3)Dr.Mandadi Srinivas
4)Dr.Kandunuri Ramakrishna
5)Mr.U.Rakesh
6)Mrs.N.L.Aravinda
7)Dr.Sushma Jaiswal
8)Mr.Tarun Jaiswal
9)Dr.A.V.Sudhakara Reddy
10)Mr.N.Naveen Sagar

(57) Abstract :
ABSTRACT A SYSTEM BASED ON MACHINE LEARNING AND ARTIFICIAL INTELLIGENCE MODULES FOR PROVIDING IOT NETWORK CONFIGURATION THROUGH USER VOICE AND GESTURE AND METHOD THEREOF [033] The present invention discloses a system based on Machine Learning and Artificial Intelligence modules for providing IoT network configuration through user voice and gesture and method thereof. The system includes, but not limited to, an image capturing device for receiving the live gesture of the user for defining the network configuration between the IoT devices; an audio recording device for receiving the voice command of the user for defining the network configuration between the IoT devices; a plurality of Machine Learning and Artificial Intelligence modules for evaluating the provided weight function for the each of the data input through the image capturing device and the audio recording device; and a processing unit in an IoT environment designed to process and perform mapping of a plurality of weight functions using Natural Language Processing Techniques for audio based input and image processing techniques for image based input. Accompanied Drawing [FIG. 1]

No. of Pages : 23 No. of Claims : 8

(12) PATENT APPLICATION PUBLICATION
(21) Application No.202141023567 A
(19) INDIA
(22) Date of filing of Application :27/05/2021
(43) Publication Date : 11/06/2021

(54) Title of the invention : A Novel System for Controlling Employees Attrition Rate

(51) International classification	:G06Q0010060000, G06Q0010100000, G06Q0040020000, G07C0001100000, B03B0009000000
(31) Priority Document No	:NA
(32) Priority Date	:NA
(33) Name of priority country	:NA
(86) International Application No	:PCT//
Filing Date	:01/01/1900
(87) International Publication No	: NA
(61) Patent of Addition to Application Number	:NA
Filing Date	:NA
(62) Divisional to Application Number	:NA
Filing Date	:NA

(71)**Name of Applicant :**
1)Dr. Suresh M B
Address of Applicant :Designation: Professor and Head Department: Information Science & Engg. Institution address: East West Institute of Technology, Bengaluru Email id: sureshresearch45@gmail.com Mobile No: 6362371359 Karnataka India
2)Prof Veena Ganesh
3)Gouri S Katageri
4)Dr Dinesh H A
5)D Sandhya
6)Dr. Manoj H M
7)Krupa R
8)Dr. Chethana Sridhar
(72)**Name of Inventor :**
1)Dr. Suresh M B
2)Prof Veena Ganesh
3)Gouri S Katageri
4)Dr Dinesh H A
5)D Sandhya
6)Dr. Manoj H M
7)Krupa R
8)Dr. Chethana Sridhar

(57) Abstract :
Title of Invention: A Novel System for Controlling Employees Attrition Rate Field of Invention: Management using Computer Application ABSTRACT An attrition alarm and control system warns an employer when an employee is about to leave. The employee is assigned to a specific turnover group. The discrete turnover group is determined by employee satisfaction activities. Employee satisfaction behaviour can be characterised according to its type. Portal logic run by the attrition alarm and control system generates employee team attrition risk reports. The gateway logic generates project team attrition risk reports from employee team attrition risk reports. The attrition alert and control system's reporting logic sends separate attrition group, employee satisfaction behaviour, employee team attrition risk reports, and project team attrition risk reports over an approved link over a communication interface.

No. of Pages : 11 No. of Claims : 1

(12) PATENT APPLICATION PUBLICATION
(21) Application No.202141023568 A
(19) INDIA
(22) Date of filing of Application :27/05/2021
(43) Publication Date : 11/06/2021

(54) Title of the invention : Kannada Text Detection and Recognition from Natural Scene Images using AksharaNet CNN Model

(51) International classification	:G06K0009000000, G06K0009620000, G06N0003040000, G06N0003080000, G06K0009320000	(71)**Name of Applicant :**
(31) Priority Document No	:NA	**1)Shahzia Siddiqua**
(32) Priority Date	:NA	Address of Applicant :REVA UNIVERSITY Rukmini Knowledge Park, Kattigenahalli, Yelahanka, Bangalore Karnataka India
(33) Name of priority country	:NA	**2)Sunilkumar S Manvi**
(86) International Application No	:PCT// /	**3)Naveena C**
Filing Date	:01/01/1900	(72)**Name of Inventor :**
(87) International Publication No	: NA	**1)Shahzia Siddiqua**
(61) Patent of Addition to Application Number	:NA	**2)Naveena C**
Filing Date	:NA	**3)Sunilkumar S Manvi**
(62) Divisional to Application Number	:NA	
Filing Date	:NA	

(57) Abstract :
With the ascent in deep learning, computer vision problems have taken center stage among the research community. As an important research area in computer vision, image text detection and recognition has been inevitably influenced by this wave of revolution. For content-based indexing and retrieval applications, text characters embedded in images are a rich source of information. Owing to their different shapes, grayscale values, and dynamic backgrounds, these text characters in scene images are difficult to detect and classify. The complexity increases when the text involved is a vernacular language like Kannada. Despite advances in deep learning neural networks (DLNN), there is a dearth of fast and effective models to classify scene text images and the availability of a large-scale Kannada scene character dataset to train them. Text recognition from natural images is an extremely complex task and entails not just detecting the text but also locating it inside the image by producing the co-ordinates of a bounding box that holds the text. Here, five claim defining inventions are proposed, (i) Kannada Scene Individual Character (KSIC) dataset which is grounds-up curated (ii) AksharaNet, a graphical processing unit (GPU) accelerated modified convolution neural network architecture consisting of linearly inverted depth-wise separable convolutions, (iii) leveraging Transfer Learning in Deep Learning for detecting and recognizing text in scene images motivated by the object detection algorithm, You Only Look Once (YOLO), (iv) Early stopping decisions at 25% and 50% epoch with good and bad accuracies for complex and light models and (v) Useful findings concerning learning rate drop factor and its ideal application period. The YOLO algorithm creates a bounding box around a detected object and includes the box's location information as well. Taking cue from this, AksharaNet, a convolution neural network (CNN) based classification model with YOLO algorithm implemented was trained on the KSIC dataset. A single reference scene image is split into 19x19 grids and the pre-trained network acts as a feature extractor and localizer. It detects text by predicting a class, builds a bounding box, and specifies text location and their respective class names which are then indexed in dictionary. From results, the KSIC dataset generated consists of 46,800 images which are classified into 468 classes, each with 100 samples for training the CNN. It is observed that AksharaNet outperforms four other well-established models by 1.5% on CPU and 1.9% on GPU. The results can be directly attributed to the quality of the developed KSIC dataset. Testing the efficacy of this network using the YOLO algorithm on the same dataset and using Transfer learning resulted in an accuracy of 90.17% and test area under the curve (AUC) of 0.932. Comparing this proposed model with existing models, it is observed that pre-trained AksharaNet with YOLO implementation returns the best precision, recall and F1-scores of 88%, 90% and 93.83% respectively, which is greater than 8%, 4% and 5% on an average compared to other models. And based on early stopping decisions and learning rate drop factor findings suggestions are tabulated for various scenarios. Therefore, results prove that (i) The KSIC dataset is large and robust to train the designed CNN, (ii) AksharaNet outperforms some of the leading CNNs being used in Deep Learning, (iii) the early stopping decisions and learning rate drop factor identified are key parameters for improved CNN performance and (iv) YOLO can be extended to other areas beyond just object detection with Transfer learning an efficient and effective deep learning technique for these class of computer vision problems.

No. of Pages : 17 No. of Claims : 4

(12) PATENT APPLICATION PUBLICATION
(21) Application No.202141023572 A
(19) INDIA
(22) Date of filing of Application :27/05/2021
(43) Publication Date : 11/06/2021

(54) Title of the invention : A POWER TRANSMISSION NETWORK BASED ON OPTIMAL GENERALIZED INTERLINE POWER FLOW CONTROLLER (OGIPFC) FOR OPTIMAL POWER FLOW FOR COMPLEX NETWORKS TO MEET INCREASED LOAD DEMAND

(51) International classification	:H02J0003060000, H02J0003180000, G06N0005020000, G06N0005040000, G06F0111060000
(31) Priority Document No	:NA
(32) Priority Date	:NA
(33) Name of priority country	:NA
(86) International Application No	:PCT//
Filing Date	:01/01/1900
(87) International Publication No	: NA
(61) Patent of Addition to Application Number	:NA
Filing Date	:NA
(62) Divisional to Application Number	:NA
Filing Date	:NA

(71)**Name of Applicant :**
1)CHAITANYA BHARATHI INSTITUTE OF TECHNOLOGY (AUTONOMOUS)
Address of Applicant :Gandipet,Hyderabad, Telangana State-500075, India Telangana India
(72)**Name of Inventor :**
1)Dr. M Balasubbareddy
2)Divyanshi Dwivedi
3)P.Venkata Prasad

(57) Abstract :
Recently, FACTS controllers have become part of transmission network as they have enhanced the static and dynamic performance of power system. A FACTS controller named as Optimal Generalized Interline Power Flow Controller (OGIPFC) is developed which is modelled using Power Injection Model (PIM) and Current Injection Model (CIM) and it is incorporated to improve performance of power system. Furthermore, for optimization a meta-heuristic method is proposed as Modified Marine Predator Algorithm (MMPA) which is recently developed algorithm Marine Predator Algorithm (MPA). The algorithm is restricted to solve the single objective problem only, so it is implemented with Non-dominating sorting to solve multi-objective optimization problem and multi-objective version is named as Non-dominating Sorting Modified Marine Predator Algorithm (NS-MMPA) and validated on test functions and IEEE-30 bus system. OPF problem has been solved with OGIPFC using MMPA and NS-MMPA which result in better solutions and make system more effective in operation

No. of Pages : 14 No. of Claims : 2

(12) PATENT APPLICATION PUBLICATION

(21) Application No.202141023607 A

(19) INDIA

(22) Date of filing of Application :27/05/2021

(43) Publication Date : 11/06/2021

(54) Title of the invention : Advanced Technology Vaccination Smart Card for Child & Adult Nutrition and Health Improvement Tracking Alert Management System.

(51) International classification	:G06Q0020340000, G06F0021340000, G06K0019077000, G06Q0030000000, G06K0019060000
(31) Priority Document No	:NA
(32) Priority Date	:NA
(33) Name of priority country	:NA
(86) International Application No Filing Date	:PCT// :01/01/1900
(87) International Publication No	: NA
(61) Patent of Addition to Application Number Filing Date	:NA :NA
(62) Divisional to Application Number Filing Date	:NA :NA

(71)**Name of Applicant :**

1)M GURUSAMY

Address of Applicant :2/50,MIDDLE STREET,PULIYANKULAM,CHITRAMPATTI(PO),KOVILPATTI(TK),THOOTHUKUDI(DIST) Tamil Nadu India

(72)**Name of Inventor :**

1)M GURUSAMY

(57) Abstract :

The health of the baby is something that needs to be taken care of from the time a baby is born in the womb of a mother and vaccination is the primary duty and primary task of the parents to protect and improve the health of the baby. Is carried out and recorded in electronic form. It is used in the following ways. The data of parents and children are collected through an integrated smart card and stored through the web application. Then a separate user number is created that is for the users. A table is created with data stored by a unique system unique to each of the users. Through this table the beneficiary is vaccinated on the day of vaccination and that data is entered by an authorized employee and stored and stored online. This system 100% ensures that parents are notified and children are vaccinated in a timely manner with a predetermined day and time and is used for continuous monitoring. A set of computer and web utility software, the Internet, an integrated smart card, a system of electronic devices and a combination of telecommunications equipment. An integrated smart card is a set of systems with different modes. The package includes the following methods (i) QR code type techniques (ii) Barcode techniques (iii) RF ID with NFC technique (Wi-Fi card) (iv) EMV card techniques {(a) EMV Chip card (b) EMV Non Chip card} (v) Magnetic Strip Card Techniques. This system works through a combination of the above methods.

No. of Pages : 24 No. of Claims : 10

(12) PATENT APPLICATION PUBLICATION
(21) Application No.202141023734 A
(19) INDIA
(22) Date of filing of Application :28/05/2021
(43) Publication Date : 11/06/2021

(54) Title of the invention : AUTOMATIC SOLAR CUTTER

(51) International classification	:G05D0001020000, A01D0101000000, A01D0034000000, A01D0034780000, A01D0034730000	(71)**Name of Applicant :**
(31) Priority Document No	:NA	**1)Er. Sreelal N**
(32) Priority Date	:NA	Address of Applicant :Assistant Professor Department of Electrical and Electronics SAINTGITS College of Engineering, Kottukulam Hills Pathamuttom P. O Kottayam KERALA Kerala India
(33) Name of priority country	:NA	**2)Anand S**
(86) International Application No	:PCT//	**3)MOHAMMAD FAIS MIKDAD**
Filing Date	:01/01/1900	**4)Benson Mathew Sam**
(87) International Publication No	: NA	**5)Ansu Mariam Kuruvilla**
(61) Patent of Addition to Application Number	:NA	(72)**Name of Inventor :**
Filing Date	:NA	**1)Er. Sreelal N**
(62) Divisional to Application Number	:NA	**2)Anand S**
Filing Date	:NA	**3)MOHAMMAD FAIS MIKDAD**
		4)Benson Mathew Sam
		5)Ansu Mariam Kuruvilla

(57) Abstract :
The smart grass cutter system puts forth a completely automated lawn mower mechanism. The robotic vehicle is equipped with a grass cutter blade that allows for grass cutting at high RPM. The system has a smart functionality that allows it to cover the complete area of a lawn or garden by detecting corners using ultrasonic sensors and moving in a zig-zag manner in order to cover the entire area. The system uses a microcontroller-based circuit to achieve the functionality. It is a battery operated system. Battery is used to run the vehicle using DC motors and to power the grass cutter. The power is delivered to the battery using a solar panel and hence no external power source is required. The microcontroller operates the vehicle movement using dc motors as well as the cutter motor at the same time monitoring the ultrasonic sensors. The movement of the machine depends upon the feedback obtained form ultrasonic sensors. The microcontroller smartly operates the dc motors using motor driver IC to achieve the desired movement based on ultrasonic outputs. Thus, the system allows automated grass cutting mechanisms without the need for any human intervention. Manual option is also provided by using android smart phone-based application.

No. of Pages : 18 No. of Claims : 6

(12) PATENT APPLICATION PUBLICATION
(21) Application No.202141023738 A
(19) INDIA
(22) Date of filing of Application :28/05/2021
(43) Publication Date : 11/06/2021

(54) Title of the invention : Technologies Towards 5G Network for Intelligent Health Care Using IOT Notification with Machine Learning Programming.

(51) International classification	:H04L0029080000, G06N0020000000, H04L0029060000, H04L0012660000, H04L0012280000
(31) Priority Document No	:NA
(32) Priority Date	:NA
(33) Name of priority country	:NA
(86) International Application No	:PCT//
Filing Date	:01/01/1900
(87) International Publication No	: NA
(61) Patent of Addition to Application Number	:NA
Filing Date	:NA
(62) Divisional to Application Number	:NA
Filing Date	:NA

(71)**Name of Applicant :**
1)Dr. Shubhangi Digamber Chikte (PROFESSOR)
Address of Applicant :DEPARTMENT OF COMPUTER SCIENCE AND ENGINEERING, VISVESVARAYA TECHNOLOGICAL UNIVERSITY(VTU), CENTER FOR PG STUDIES, KALABURAGI-585105 KARNATAKA, INDIA. E-Mail: shubhangidc@vtu.ac.in +91-9448716838 Karnataka India
2)Shireen Fatima (RESEARCH SCHOLAR, VTU CPGS GULBARGA)
3)Preeti. M. Dandagi (RESEARCH SCHOLAR, VTU CPGS GULBARGA)
4)Priti (RESEARCH SCHOLAR, VTU CPGS GULBARGA)
5)Ayesha (RESEARCH SCHOLAR, VTU CPGS GULBARGA)
6)Zohra Naval (RESEARCH SCHOLAR, VTU CPGS GULBARGA)
7)Pratibha (RESEARCH SCHOLAR, VTU CPGS GULBARGA)
8)Uzma Sultana (RESEARCH SCHOLAR, VTU CPGS GULBARGA)
9)Pooja (RESEARCH SCHOLAR, VTU CPGS GULBARGA)
(72)**Name of Inventor :**
1)Dr. Shubhangi Digamber Chikte (PROFESSOR)
2)Shireen Fatima (RESEARCH SCHOLAR, VTU CPGS GULBARGA)
3)Preeti. M. Dandagi (RESEARCH SCHOLAR, VTU CPGS GULBARGA)
4)Priti (RESEARCH SCHOLAR, VTU CPGS GULBARGA)
5)Ayesha (RESEARCH SCHOLAR, VTU CPGS GULBARGA)
6)Zohra Naval (RESEARCH SCHOLAR, VTU CPGS GULBARGA)
7)Pratibha (RESEARCH SCHOLAR, VTU CPGS GULBARGA)
8)Uzma Sultana (RESEARCH SCHOLAR, VTU CPGS GULBARGA)
9)Pooja (RESEARCH SCHOLAR, VTU CPGS GULBARGA)

(57) Abstract :
ABSTRACT Our Invention Technologies Towards 5G Network for Intelligent Health Care Using IOT Notification with Machine Learning Programming is a Smart health-care is undergoing rapid transformation from the conventional specialist and hospital-focused style to a distributed patient-focused manner. The 5-G networks are being designed and developed to tackle the diverse communication needs of health-care applications in Internet of Things (IoT) under Machine Learning Programming. 5-G assisted Intelligent health-care networks are an amalgamation of IoT devices that require improved network performance and enhanced cellular coverage. The invention is a comprehensive research of 5G assisted Intelligent health-care solutions in ML and IoT a structure for Intelligent health-care in 5G by categorizing and classifying existing Technology. The speeds of +100 megabits per second,1 more data bandwidth, and fewer delays due to built-in computing intelligence that handles data very efficiently and also the new era of 5G will bring together improved connectivity, cloud-based storage, and an array of connected devices and services. The Invention can download an interactive 3-D video in a few seconds, a smart home anticipates your needs, and autonomous vehicles take you to your destination safely and also is the world of fifth-generation 5-G broadband technology.

No. of Pages : 15 No. of Claims : 6

(12) PATENT APPLICATION PUBLICATION
(21) Application No.202141023740 A
(19) INDIA
(22) Date of filing of Application :28/05/2021
(43) Publication Date : 11/06/2021

(54) Title of the invention : Design and Fabrication of IoT based Solar Agriculture Weeder

(51) International classification	:A01B0039180000, A01M0021040000, G06Q0050100000, G16Z0099000000, A01M0021000000
(31) Priority Document No	:NA
(32) Priority Date	:NA
(33) Name of priority country	:NA
(86) International Application No	:PCT//
Filing Date	:01/01/1900
(87) International Publication No	: NA
(61) Patent of Addition to Application Number	:NA
Filing Date	:NA
(62) Divisional to Application Number	:NA
Filing Date	:NA

(71)**Name of Applicant :**
1)St. Martin™s Engineering College
Address of Applicant :Sy no 98 & 100, Dhulapally, Kompally Secenderabad Telangana India Telangana India
(72)**Name of Inventor :**
1)Dr. P. Santosh Kumar Patra, Principal & Professor / Department of Computer Science & Engineering / SMEC
2)Dr. D.V. Sreekanth, Professor & HOD / Department of Mechanical Engineering/SMEC.
3)Dr. N. Ramachandra, Professor & HOD/ Department of Electrical & Electronics Engineering/SMEC.
4)Dr. B. Hari Krishna, Professor & HOD/ Department of Electronics & Communication Engineering/SMEC
5)Dr. M. Narayanan, Professor & HOD/ Department of Computer Science & Engineering/SMEC
6)Dr. R. Nagaraju, Professor & HOD/ Department of Information Technology/SMEC
7)Dr. D. Ranadheer Reddy, Professor & HOD/ Department of Science and Humanities/SMEC
8)Dr. T. Poongothai, Professor & HOD/ Department of Computer Science (AI & ML)/SMEC
9)Dr. S.V.S Rama Krishnam Raju Professor, ECE Department / Dean Academics/SMEC
10)Prof. J.K. Sandhya Kiran Professor & HOD/ Department of Civil Engineering/SMEC

(57) Abstract :
Weed control is one of the most difficult tasks in agriculture that accounts for a considerable share of the cost involved in agricultural production. Farmers generally expressed their concern for effective weed control measures to arrest the growth and propagation of weeds. Chemical method of weed control is more prominent than manual and mechanical methods. It is the most widely used weed control method but it is labors intensive. However, agriculture weeder is used to reduce work intensity and increase the outcome. Agriculture weeder is very effective as it helps to reduce drudgery involved in manual weeding, it kills the weeds and also keeps the soil surface loose ensuring soil aeration and water intake capacity. Weeding is an important but equally labor-intensive agricultural unit operation. There is an increasing interest in the use of agriculture intra-row weeders because of concern over environmental degradation and a growing demand for organically produced food. Today the agricultural sector requires agriculture weeder that ensures food safety. Consumers demand high quality food products and pay special attention to food safety. Through the technical development of mechanisms for physical weed control, such as precise inter-and intra-row weeders, it might be possible to control weeds in a way that meets consumer demands. These agriculture weeders help in time consumption and increase the product it is easy to build, low cost and it only consist of mother, battery, plowing toll and wheel for easy motion, these weeders not only remove weeds but also unwanted mud or sand around the trees, these types of weeder are important to Farmers to help them increase the product out come and decrease the manual labor. This work discusses the design and development of an IoT based solar Agri weeder that automates irrigation task and enables remote farm monitoring. Agricultural weeder acts as an IoT device and transmits the data collected from multiple sensors to a remote server using Wi-Fi link. At the remote server, raw data is processed using signal processing operations such as filtering, compression and prediction. Accordingly, the analyzed data statistics are displayed using an interactive interface, as per user request.

No. of Pages : 18 No. of Claims : 6

(12) PATENT APPLICATION PUBLICATION
(21) Application No.202141023779 A
(19) INDIA
(22) Date of filing of Application :28/05/2021
(43) Publication Date : 11/06/2021

(54) Title of the invention : BOOK REVIEW SESSION (BRS) BEST PRACTICE - SIVA SIVANI INSTITUTE OF MANAGEMENT

(51) International classification	:G06Q0050200000, G09B0005140000, B42D0001000000, G06Q0090000000, B42D0015000000	(71)**Name of Applicant :** **1)Siva Sivani-Institute of Management** Address of Applicant :NH-44 Kompally Secenderabad Telangana India Telangana India
(31) Priority Document No	:NA	(72)**Name of Inventor :** **1)Dr. S.V. Ramana Rao, Director / SSIM**
(32) Priority Date	:NA	**2)Dr. S.F. Chandra Sekhar, Professor / SSIM**
(33) Name of priority country	:NA	**3)Mr. K. Sreehari, Associate Professor / SSIM**
(86) International Application No	:PCT//	**4)Dr.K. S. Harish, Professor / SSIM**
Filing Date	:01/01/1900	**5)Dr.Pavan Patel, Professor / SSIM**
(87) International Publication No	: NA	**6)Dr. N.C. Rajya Lakshmi, Professor / SSIM**
(61) Patent of Addition to Application Number	:NA	
Filing Date	:NA	
(62) Divisional to Application Number	:NA	
Filing Date	:NA	

(57) Abstract :

Abstract: A review is a critical evaluation of a text, event, object, or phenomenon. Reviews can consider books, articles, entire genres or fields of literature, architecture, art, fashion, restaurants, policies, exhibitions, performances, and many other forms. This work focus on book reviews. Book Review objective is clearly conveying the book contents and critical perspective of the book essence to the students in the class. The sessions provide an opportunity to students to learn about the summary of book™s content(s). Reviewers should consider the value of the book related to the business field which must facilitate in augmenting the student™s business comprehension and add value to their business knowledge. This work highlights the book review methods adopted and effectively implemented in Siva Sivani Institute of Management. SSIM inculcated this best practice in the curriculum and provided an opportunity to students to learn about the summary of book™s content(s), formatting, organizing and evaluating etc.

No. of Pages : 9 No. of Claims : 4

(12) PATENT APPLICATION PUBLICATION
(21) Application No.202141023786 A
(19) INDIA
(22) Date of filing of Application :28/05/2021
(43) Publication Date : 11/06/2021

(54) Title of the invention : A NOVEL SYSTEM BASED ON RANDOM SAMPLE CONSENSUS (RANSAC) FOR IRIS RECOGNITION IN NON-IDEAL IMAGING CONDITIONS

(51) International classification	:G06K0009000000, G06T0007330000, G06T0007000000, G06F0016230000, G06T0007285000
(31) Priority Document No	:NA
(32) Priority Date	:NA
(33) Name of priority country	:NA
(86) International Application No	:PCT//
Filing Date	:01/01/1900
(87) International Publication No	: NA
(61) Patent of Addition to Application Number	:NA
Filing Date	:NA
(62) Divisional to Application Number	:NA
Filing Date	:NA

(71)**Name of Applicant :**
1)Mr.G R Anil
Address of Applicant :Research Scholar, School of Computer and information Sciences, University of Hyderabad, Hyderabad, Telangana, India. Pin Code:500046 Telangana India
2)Dr.Dumala Anveshini
3)Dr.Shaik Meera Sharief
4)Dr.Ramesh Babu Vallabhaneni
5)Dr.Karthikeyan Palaniappan
6)Mrs.R.Janaki
7)Dr.T.Sheela
8)Dr.Sushma Jaiswal
9)Mr.Tarun Jaiswal
10)Mr.Miranji Katta
(72)**Name of Inventor :**
1)Mr.G R Anil
2)Dr.Dumala Anveshini
3)Dr.Shaik Meera Sharief
4)Dr.Ramesh Babu Vallabhaneni
5)Dr.Karthikeyan Palaniappan
6)Mrs.R.Janaki
7)Dr.T.Sheela
8)Dr.Sushma Jaiswal
9)Mr.Tarun Jaiswal
10)Mr.Miranji Katta

(57) Abstract :
ABSTRACT A NOVEL SYSTEM BASED ON RANDOM SAMPLE CONSENSUS (RANSAC) FOR IRIS RECOGNITION IN NON-IDEAL IMAGING CONDITIONS [032] The present invention discloses a system based on random sample consensus (RANSAC) for iris recognition in non-ideal imaging conditions and method thereof. The system includes, but not limited to, a processing unit adapted to evaluate noisy factors from an iris captured image in non-ideal conditions. The processing unit is further configured to localize the iris boundaries more accurately through random sample consensus (RANSAC) and a deep learning module, and further, configured to have a registration interface for storing the filtered iris image data into an online or local database unit. In addition, the random sample consensus (RANSAC) module is configured to divide the iris image data into small-sub images. Accompanied Drawing [FIG. 1]

No. of Pages : 20 No. of Claims : 8

(12) PATENT APPLICATION PUBLICATION
(21) Application No.202141023964 A
(19) INDIA
(22) Date of filing of Application :29/05/2021
(43) Publication Date : 11/06/2021

(54) Title of the invention : COMPANY REVIEW SESSION BEST PRACTICE- SIVA SIVANI INSTITUTE OF MANAGEMENT

(51) International classification	:G06Q0010060000, G06Q0010100000, G06Q0050200000, G06F0021300000, B42D0015000000
(31) Priority Document No	:NA
(32) Priority Date	:NA
(33) Name of priority country	:NA
(86) International Application No	:PCT//
Filing Date	:01/01/1900
(87) International Publication No	: NA
(61) Patent of Addition to Application Number	:NA
Filing Date	:NA
(62) Divisional to Application Number	:NA
Filing Date	:NA

(71)**Name of Applicant :**
1)Siva Sivani-Institute of Management
Address of Applicant :Siva Sivani Institute of Management NH-44, Kompally Secenderabad Telangana India 500100 Telangana India

(72)**Name of Inventor :**
1)Mr. Pardhasaradhi Madasu, Associate Professor / SSIM
2)Dr. V. Annapurna, Associate Professor / SSIM
3)Mr. T. Thirumal Reddy, Assistant Professor / SSIM
4)Ms. Daman deep Johar, Assistant Professor / SSIM
5)Dr. Arijit Santikary, Associate Professor / SSIM
6)Ms. K Grace Mani, Assistant Professor / SSIM

(57) Abstract :

Abstract : Company Review Session (CRS) followed at Siva Sivani Institute of Management (SSIM) is to get an overview of a Company, its Management Team who drive the Company, its location, mission and legal structure. These sessions aim to inculcate business sense by familiarizing the student with the corporates™ performance metrics, customer metrics and people metrics, business reporting language and strategies, organizational culture and its ethical framework. It is an opportunity for the student to visit and explore his or her Dream Company • and to understand the Quality standards required for shaping and designing for their career opportunities in such corporates. This activity presents a plethora of opportunities to the students to select from the innumerable companies within and outside India. Time and distance is no more a limitation due to the technology. This system is implemented and successfully operating in Siva Sivani Institute of Management.

No. of Pages : 10 No. of Claims : 4

(12) PATENT APPLICATION PUBLICATION
(21) Application No.202141023989 A
(19) INDIA
(22) Date of filing of Application :29/05/2021
(43) Publication Date : 11/06/2021

(54) Title of the invention : A System and Method for Secure Fish Farming Using Internet of things

(51) International classification	:G06F0021640000, G06F0016230000, H04L0009060000, G06Q0050020000, G06T0007200000
(31) Priority Document No	:NA
(32) Priority Date	:NA
(33) Name of priority country	:NA
(86) International Application No	:PCT//
Filing Date	:01/01/1900
(87) International Publication No	: NA
(61) Patent of Addition to Application Number	:NA
Filing Date	:NA
(62) Divisional to Application Number	:NA
Filing Date	:NA

(71)**Name of Applicant :**
1)Prof.Bineet Kumar Jha, CMR Institute of Technology
Address of Applicant :CMR Institute of Technology, AECS Layout, Bengaluru, Karnataka, India 560037. Karnataka India
2)Dr. Akana Chandra Mouli Venkata Srinivas, AMC engineering college
3)Prof. Dheeraj D, Global Academy of Technology
4)Chiyyedu Manasa, Global Academy of Technology
5)Dr. Asha jyothi ch, JNTUH, Jagithyal
6)NazneenTaj, KNS Institute of Technology
(72)**Name of Inventor :**
1)Prof.Bineet Kumar Jha, CMR Institute of Technology
2)Dr. Akana Chandra Mouli Venkata Srinivas, AMC engineering college
3)Prof. Dheeraj D, Global Academy of Technology
4)Chiyyedu Manasa, Global Academy of Technology
5)Dr. M.Shahina Parveen ,CMR Institute of Technology
6)Dr. Asha Jyothi ch, JNTUH,Jagithyal

(57) Abstract :
Thesystemproposes a generic interaction methodto integrate a legacy ï¬ • sh farm system with the blockchain by using a RESTful interface. Besides, this interface obstructs the interaction with other distributed systems since it can be customized to meet diï¬erent scenarios and requirements. Agriculture data are known to be messy, especially from combine yield monitors, and analysts are concerned with the validity of data, especially given that other people may have impacted data quality at various steps along the data path. The blockchain can be a possible solution to the analyst™s problem of uncertain data quality from prior data manipulation since it ensures data have not been inappropriately manipulated or at the very least documents what changes have been made by specific individuals. This work proposes a blockchain-based fish farm platform to ensure agriculture data integrity. The designed System aims to provide fish farmers with secure storage for preserving the large amounts of agriculture data that cannot be tampered with. Diverse processes of the fish farm are executed automatically by using the smart contract to reduce the risk of error or manipulation. A proof of concept that integrates a legacy fish farm system with the Hyperledger Fabric blockchain is implemented on top of the proposed architecture. The efficiency and usability of the proposed platform are demonstrated through a series of experiments using various metrics.

No. of Pages : 14 No. of Claims : 7

(12) PATENT APPLICATION PUBLICATION
(21) Application No.202141023998 A
(19) INDIA
(22) Date of filing of Application :29/05/2021
(43) Publication Date : 11/06/2021

(54) Title of the invention : SMART HELMET FOR SMART WORKERS

(51) International classification	:H04L0012260000, A42B0003040000, G08B0021120000, G07C0001100000, G08B0021180000
(31) Priority Document No	:NA
(32) Priority Date	:NA
(33) Name of priority country	:NA
(86) International Application No	:NA
Filing Date	:NA
(87) International Publication No	: NA
(61) Patent of Addition to Application Number	:NA
Filing Date	:NA
(62) Divisional to Application Number	:NA
Filing Date	:NA

(71)**Name of Applicant :**
1)Jyothis Kumar D
Address of Applicant :Department of Electrical and Electronics Engineering SAINTGITS College of Engineering, Kottukulam Hills Pathamuttom P. O Kottayam 686532 KERALA Kerala India
2)Jerin Antony
3)Aakarsh S Kumar
4)Aneesha Joseph
5)Er. Merin Antony
(72)**Name of Inventor :**
1)Jyothis Kumar D
2)Jerin Antony
3)Er. Merin Antony
4)Aakarsh S Kumar
5)Aneesha Joseph

(57) Abstract :
Industrial jobs are among the most hazardous, given the conditions that workers face on a regular basis. Gas poisoning, falling objects and exposure to high temperatures are just some of the causes of occupational accidents. As a result, safety is paramount in these places. To ensure that, the proposed system employs a remote sensor network to track the working environment in real time from a monitoring station. It continuously monitors the air quality, as well as the temperature and physical movement of the workers. The limit switch ensures whether or not the helmet is properly worn or not. In addition to these protection measures a RFID attendance sensing device is also provided. The information and data is transmitted and processed using Wi-Fi and IoT technologies.

No. of Pages : 23 No. of Claims : 5

(12) PATENT APPLICATION PUBLICATION
(21) Application No.202141024012 A
(19) INDIA
(22) Date of filing of Application :29/05/2021
(43) Publication Date : 11/06/2021

(54) Title of the invention : Smart IoT Wearable device for Heartbeat Rate Monitoring and Alerting System for COVID Patients

(51) International classification	:A61B0005024000, A61B0005000000, G16H0050300000, G16H0080000000, G16H0040670000
(31) Priority Document No	:NA
(32) Priority Date	:NA
(33) Name of priority country	:NA
(86) International Application No	:PCT//
Filing Date	:01/01/1900
(87) International Publication No	: NA
(61) Patent of Addition to Application Number	:NA
Filing Date	:NA
(62) Divisional to Application Number	:NA
Filing Date	:NA

(71)**Name of Applicant :**
1)Dr.V.Arulkumar, Sri Krishna College of Engineering and Technology, Coimbatore
Address of Applicant :Assistant Professor, Computer Science and Business Systems (TCS), Sri Krishna College of Engineering and Technology, Coimbatore. Tamil Nadu India
2)Dr.R.Lokeshkumar, Vellore Institute of Technology, Vellore
3)Mr D.Selvapandian, Karpagam Academy of Higher Education, Coimbatore
4)Mr A. Ranjith, St. Joseph university in Tanzania
5)Mr S.Arockia Jayadhas, St.Joseph University in Tanzania
6)Dr Prabhakaran Paulraj, St Joseph University in Tanzania
(72)**Name of Inventor :**
1)Dr.V.Arulkumar, Sri Krishna College of Engineering and Technology, Coimbatore
2)Dr.R.Lokeshkumar, Vellore Institute of Technology, Vellore
3)Mr D.Selvapandian, Karpagam Academy of Higher Education, Coimbatore
4)Mr A. Ranjith, St. Joseph university in Tanzania
5)Mr S.Arockia Jayadhas, St.Joseph University in Tanzania
6)Dr Prabhakaran Paulraj, St Joseph University in Tanzania

(57) Abstract :
A pulse monitoring system has been developed using IoT technology to monitor a patient's pulse to determine the risk of heart attack and a routine physical exam. The physical exam is very important for us to make sure that our health is in the best condition. One of the main parameters of this tool to consider is heart rate (HR). This medicine is a natural solution for the prevention and treatment of most diseases. Many high-risk illnesses can be treated and prevented with appropriate medications. The main purpose of the system we are offering is to provide an easy to use design and can be used to remind patients to take their daily medications on time. The portable device is designed to be used for heart rate monitoring. When a significant change in heart rate occurs, the user will receive a vibration notification to take the required medication. Emails are also sent to notify users. In this project, we will describe the design of an affordable, handy heart rate monitor using Bluetooth technology. The whole system consists of several parts such as heart rate module, app and Android module. The Heart Rate Module (HR) receives heart rate signals using non-invasive techniques. (Photoplethysmography) transmits (signals) objects (patients) and wirelessly to a computer or this system, an Android application that uses a Bluetooth module, can be used and integrated as part of the telemedicine component. Heart rate module data can be stored and studied for medical purposes. The results of the prototype of this device can be used in various clinical studies, in fact this Bluetooth signal can be transmitted within a range of 15 to 20 meters.

No. of Pages : 8 No. of Claims : 4

(12) PATENT APPLICATION PUBLICATION
(19) INDIA
(22) Date of filing of Application :29/05/2021
(21) Application No.202141024036 A
(43) Publication Date : 11/06/2021

(54) Title of the invention : ANALYSIS OF IMPACTS OF THE USE OF SOLID RECOVERED FUEL IN POLLUTANTS FOUND IN GASIFICATION

(51) International classification	:B01D0053320000, C10B0053000000, C08L0071020000, F23G0007000000, C10L0010020000
(31) Priority Document No	:NA
(32) Priority Date	:NA
(33) Name of priority country	:NA
(86) International Application No	:PCT//
Filing Date	:01/01/1900
(87) International Publication No	: NA
(61) Patent of Addition to Application Number	:NA
Filing Date	:NA
(62) Divisional to Application Number	:NA
Filing Date	:NA

(71)**Name of Applicant :**
1)Dr.M.SARAVANAN
Address of Applicant :SENIOR PROFESSOR & VICE PRINCIPAL, DEPARTMENT OF MECHANICAL ENGINEERING, PONJESLY COLLEGE OF ENGINEERING, PONJESLY, COLLEGE RD, PARVATHIPURAM, NAGERCOIL, TAMIL NADU- 629003 Tamil Nadu India
2)Dr. S. SENTHIL KUMAR,
3)Mrs.D.N.ROOPA
4)Mr. BHARATH. M.N
5)Dr. M. PANDIAN
6)Dr.S.NAVANEETHAKRISHNAN
7)Dr. C. GNANAVEL
8)Dr. MOTI LAL RINAWA
9)Mr. KALIYA PERUMAL PALANISAMY
10)Dr. M.RAMARAO
11)Mr. NAGARAJA. T. K.
(72)**Name of Inventor :**
1)Dr.M.SARAVANAN
2)Dr. S. SENTHIL KUMAR,
3)Mrs.D.N.ROOPA
4)Mr. BHARATH. M.N
5)Dr. M. PANDIAN
6)Dr.S.NAVANEETHAKRISHNAN
7)Dr. C. GNANAVEL
8)Dr. MOTI LAL RINAWA
9)Mr. KALIYA PERUMAL PALANISAMY
10)Dr. M.RAMARAO
11)Mr. NAGARAJA. T. K.

(57) Abstract :
ANALYSIS OF IMPACTS OF THE USE OF SOLID RECOVERED FUEL IN POLLUTANTS FOUND IN GASIFICATION Wood air gasification produces polluting compounds, as a thermochemical conversion process, and the use of SRFs, containing more precursors of pollutants than wood, was therefore likely to produce more pollutants or even new pollutants. The SRFs studied in this work show higher sulfur, nitrogen and heavy metals. As can be thought in an intuitive way, it can be shown that, overall, an increase in these precursors of pollutants in entry fuels leads to higher pollutant concentrations in effluents, and even the presence of new polluting compounds. Thus, the addition of plastic in the SRF mixture leads to higher tarmakers. The increase in plastic leads to an increase in vapor phase compounds in the reactor, and thus to a local fuel enrichment in the combustion zone. The air coming to the same flow, cannot consume everything, which leads to more tar. The addition of tires, containing benzene cycles and PAHs in its composition, leads to an increase in these compounds in effluents.

No. of Pages : 19 No. of Claims : 3

(12) PATENT APPLICATION PUBLICATION
(21) Application No.202141024038 A
(19) INDIA
(22) Date of filing of Application :29/05/2021
(43) Publication Date : 11/06/2021

(54) Title of the invention : INTELLIGENT INDOOR HEALTH MONITORING FRAMEWORK USING LOW ENERGY BLUETOOTH BEACONS

(51) International classification	:H04W0004800000, A61B0005000000, A61B0005010000, G01N0023040000, A61B0005145000
(31) Priority Document No	:NA
(32) Priority Date	:NA
(33) Name of priority country	:NA
(86) International Application No	:PCT//
Filing Date	:01/01/1900
(87) International Publication No	: NA
(61) Patent of Addition to Application Number	:NA
Filing Date	:NA
(62) Divisional to Application Number	:NA
Filing Date	:NA

(71)**Name of Applicant :**
1)Dr. Ramesh Kumar
Address of Applicant :Senior Manager, Product Management, #206, Viveks Sanskaar Apartments, 7th cross, Belathur Main Road, Bangalore - 560067, Karnataka, India. Karnataka India
2)Mr. Shanavas T N
3)Dr. N. Renuga Devi M.Sc., M.Phil., Ph.D.,
4)Dr. Bos Mathew Jos
5)Mr. Satish Sampatrao Salunkhe
6)Dr. Vaishali D. Khairnar
7)Mr. Sanchit Manish Kabra
8)Dr. Shilpa S. Laddha
(72)**Name of Inventor :**
1)Dr. Ramesh Kumar
2)Mr. Shanavas T N
3)Dr. N. Renuga Devi M.Sc., M.Phil., Ph.D.,
4)Dr. Bos Mathew Jos
5)Mr. Satish Sampatrao Salunkhe
6)Dr. Vaishali D. Khairnar
7)Mr. Sanchit Manish Kabra
8)Dr. Shilpa S. Laddha

(57) Abstract :
To check the individual strength of people the current innovation gives a proficient method. For checking individual indispensable signs information Bluetooth low energy- based sensors can be considered as an answer. To assist diabetic patients with bettering self-deal with their ongoing condition by using a Bluetooth low energy -based sensor gadget, ongoing information handling, and Artificial intelligence-based calculations were proposed and customized medical services checking framework in this invention. To accumulate clients' crucial signs information Bluetooth low energy were utilized like weight, blood glucose and pulse from sensor hubs to cell phones, while to deal with the huge measure of consistently produced sensor information ongoing information preparation was used.

No. of Pages : 12 No. of Claims : 6

(12) PATENT APPLICATION PUBLICATION
(19) INDIA
(22) Date of filing of Application :30/05/2021
(21) Application No.202141024063 A
(43) Publication Date : 11/06/2021

(54) Title of the invention : HUMAN ACTION ACKNOWLEDGMENT UTILIZING DEEP LEARNING WITH PROFOUND PORTRAYALS

(51) International classification	:G06N0003040000, G06N0003080000, G06Q0030060000, G16H0050200000, A61B0005000000
(31) Priority Document No	:NA
(32) Priority Date	:NA
(33) Name of priority country	:NA
(86) International Application No	:PCT//
Filing Date	:01/01/1900
(87) International Publication No	: NA
(61) Patent of Addition to Application Number	:NA
Filing Date	:NA
(62) Divisional to Application Number	:NA
Filing Date	:NA

(71)**Name of Applicant :**
1)MAHESWARA REDDY SURA
Address of Applicant :Professor, Department of ECE, Guru Nanak Institutions Technical Campus, Hyderabad, Telangana, India Telangana India
2)K. SUSEELA
3)C. M. SRI PRIYA
4)R. DIVYA
5)T SRINIVASA PADMAJA
6)Dr. MOHAMMED KHAJA NIZAMUDDIN
7)D. SURENDRA RAO
8)VORUCHU SAI BABU
9)O. RAVINDER
10)Dr. K. SHASHIDHAR
11)SRINIVAS NANDA
12)K. KRISHNA KUMAR
(72)**Name of Inventor :**
1)MAHESWARA REDDY SURA
2)K. SUSEELA
3)C. M. SRI PRIYA
4)R. DIVYA
5)T SRINIVASA PADMAJA
6)Dr. MOHAMMED KHAJA NIZAMUDDIN
7)D. SURENDRA RAO
8)VORUCHU SAI BABU
9)O. RAVINDER
10)Dr. K. SHASHIDHAR
11)SRINIVAS NANDA
12)K. KRISHNA KUMAR

(57) Abstract :
ABSTRACT HUMAN ACTION ACKNOWLEDGMENT UTILIZING DEEP LEARNING WITH PROFOUND PORTRAYALS In recent decades, specialists have been paying a lot of attention towards human activity acknowledgment in view of its various applications. These applications include Human Computer Interaction, video observation, Ambient Assisted Living, amusement, and keen driving. The deep inclining-based methodologies have uncovered the noteworthy advancement for activity acknowledgment in recordings. The deep learning model presented for decreasing the dimensionality of the information, and Deep Belief Networks (DBNs) have been broadly utilized for picture characterization, object acknowledgment, and activity acknowledgment. Due to large amounts of data on the internet like pictures, sounds, and recordings, requests for high exactnesses and computational efficiencies are expanded. Because of these reasons, the learning has pulled in a great deal of interests in the regions of AI and computer vision. Figure 2

No. of Pages : 10 No. of Claims : 5

(12) PATENT APPLICATION PUBLICATION
(21) Application No.202141024064 A
(19) INDIA
(22) Date of filing of Application :30/05/2021
(43) Publication Date : 11/06/2021

(54) Title of the invention : AUTOMATIC BILLING SYSTEM FOR SOLAR AND KSEB POWERED SMART ELECTRICAL SYSTEM USING BLOCKCHAIN

(51) International classification	:G06Q0050060000, G01D0004000000, G01R0022060000, G01R0021000000, H02J0007350000
(31) Priority Document No	:NA
(32) Priority Date	:NA
(33) Name of priority country	:NA
(86) International Application No	:PCT//
Filing Date	:01/01/1900
(87) International Publication No	: NA
(61) Patent of Addition to Application Number	:NA
Filing Date	:NA
(62) Divisional to Application Number	:NA
Filing Date	:NA

(71)**Name of Applicant :**
1)Er. Arun Sebastian
Address of Applicant :Assistant Professor Department of Electrical and Electronics Engineering SAINTGITS College of Engineering, Kottukulam Hills Pathamuttom P. O Kottayam 686532 KERALA Kerala India
2)Abhishek Binu
3)Alwin Saji
4)Bharath Krishnan
5)Er. Gokulnath G
6)S. Keerthana
(72)**Name of Inventor :**
1)Er. Arun Sebastian
2)Abhishek Binu
3)Alwin Saji
4)Bharath Krishnan
5)Er. Gokulnath G
6)S. Keerthana

(57) Abstract :
Nowadays measurement of energy, especially electricity consumption becomes a major issue in big cities. It is because big cities involve many electricity consumers, therefore measurement and planning of the electricity network is difficult. Transactions between distributors and consumers are not automated. There is no transparency in traditional energy billing and distribution systems. Most of the metering system still rely upon the traditional system of manual consumption meter readings. Current energy consumption levels cannot be monitored in traditional systems. These metering processes is time consuming and inefficient. Since these systems are non-transparent and centralized there can be trust issues. Customers are not aware of the process and their personal data can be vulnerable to attacks or misuse, so there is a need for the instant view of active energy usage. The main objective of the project is to propose a system which uses blockchain technology for the metering and billing of the customer™s energy consumption for the electric network. There by solving the trust and privacy issues of customers. It helps to identify energy consumption from both solar and KSEB separately. Blockchain can provide safer and more transparent solutions with its decentralized structure. The entire system primarily works on solar power and if the solar power is unavailable it automatically shifts to KSEB. Another important objective is the smart controlling of lighting and other devices. Efficient and automated control of lighting and other devices are necessary.

No. of Pages : 13 No. of Claims : 3

(12) PATENT APPLICATION PUBLICATION
(21) Application No.202141024073 A
(19) INDIA
(22) Date of filing of Application :30/05/2021
(43) Publication Date : 11/06/2021

(54) Title of the invention : ONLINE MARKETING - HOW CONSUMERS RESPOND TO THE SCHEMES OF INTERNET MARKETING

(51) International classification	:G06Q0030020000, G06Q0050000000, H04H0060320000, G09B0025000000, H04N0009820000
(31) Priority Document No	:NA
(32) Priority Date	:NA
(33) Name of priority country	:NA
(86) International Application No	:PCT//
Filing Date	:01/01/1900
(87) International Publication No	: NA
(61) Patent of Addition to Application Number	:NA
Filing Date	:NA
(62) Divisional to Application Number	:NA
Filing Date	:NA

(71)**Name of Applicant :**
1)Dr. N. SRINIVAS KUMAR
Address of Applicant :PROFESSOR & ASSISTANT DIRECTOR, SCHOOL OF MANAGEMENT STUDIES, GURU NANAK INSTITUTIONS TECHNICAL CAMPUS KHANAPUR VILLAGE, MANCHAL, IBRAHIMPATNAM, TELANGANA- 501506 Telangana India
(72)**Name of Inventor :**
1)Dr. N. SRINIVAS KUMAR

(57) Abstract :
ONLINE MARKETING - HOW CONSUMERS RESPOND TO THE SCHEMES OF INTERNET MARKETING Traditional marketing tactics are well-known by firms around the globe, although there are few innovative options for promoting competition. And then there's online marketing, which has almost infinite opportunities and choices. This research looked at the increasing significance of online marketing, as well as a number of online marketing schemes. It also includes a concise overview of online marketing, as well as simple internet schemes and the response to the problem. The findings of the analysis would aid web advertisers in developing better targeting strategies to affect customers' buying intentions and purchasing behaviour. The data was obtained using the chosen structures borrowed from the literature. The PLS-SEM methodology was used to test the conceptual model using survey data from 392 Indian consumers. The study validates a conceptual model that creates a connection between numerous marketing schemes and purchase intention and consumer purchasing behaviour. Influencer marketing, social network marketing, eWOM, and viral marketing all have a huge impact on purchase intention, according to the study. Email marketing and content marketing, on the other side, have no effect on purchasing intention and purchase intention leads to consumer purchasing behavior.

No. of Pages : 14 No. of Claims : 1

(12) PATENT APPLICATION PUBLICATION
(19) INDIA
(22) Date of filing of Application :30/05/2021
(21) Application No.202141024082 A
(43) Publication Date : 11/06/2021

(54) Title of the invention : A DIET AND WORKOUT RECOMMENDATION SYSTEM USING IMPROVED CONDITIONAL RESTRICTED BOLTZMANN MACHINES (CRBM) AND METHOD THEREOF

(51) International classification	:G06Q0050220000, G06N0003040000, G06N0003080000, A61K0038300000, G06F0021000000
(31) Priority Document No	:NA
(32) Priority Date	:NA
(33) Name of priority country	:NA
(86) International Application No	:PCT//
Filing Date	:01/01/1900
(87) International Publication No	: NA
(61) Patent of Addition to Application Number	:NA
Filing Date	:NA
(62) Divisional to Application Number	:NA
Filing Date	:NA

(71)**Name of Applicant :**
1)Dr. Vaishali M Deshmukh
Address of Applicant :Department of Computer Science & Engineering, New Horizon College of Engineering, Bengaluru, India Karnataka India
2)Dr. Samiksha Shukla
3)Dr. Jossy P George
(72)**Name of Inventor :**
1)Dr. Vaishali M Deshmukh
2)Dr. Samiksha Shukla
3)Dr. Jossy P George

(57) Abstract :
ABSTRACT A DIET AND WORKOUT RECOMMENDATION SYSTEM USING IMPROVED CONDITIONAL RESTRICTED BOLTZMANN MACHINES (CRBM) AND METHOD THEREOF [049] The present invention discloses a diet and workout recommendation system using improved Conditional Restricted Boltzmann Machines (CRBM) and method thereof. The system includes, but not limited to, one or more processor provided in a computer network; and a memory disposed in communication with each of the processor and storing processor executable instructions, the instructions comprising instructions to: process varied datasets of Food items and various nutrient parameters of Food items with respect to their ratings by various food takers and while recommending for a patient or a target user; estimate the closest neighbours with rating similarity and disease type food-item similarity; create a Conditional Restricted Boltzmann Machines (CRBM) model with a plurality of hidden units and visible units; deï¬ • ne a joint distribution over visible variables units and hidden units by using a singular value decomposition (SVD) matrix factorization module; and provides the diet and workout plans to the target user. Accompanied Drawing [FIG. 1]

No. of Pages : 26 No. of Claims : 10

(12) PATENT APPLICATION PUBLICATION
(21) Application No.202141024093 A
(19) INDIA
(22) Date of filing of Application :31/05/2021
(43) Publication Date : 11/06/2021

(54) Title of the invention : Diagnosis and Analysis Brain Tumor Using Image Segmentation Technique.

(51) International classification	:G06K0009620000, G06T0007000000, A61B0005055000, G16H0010600000, G06T0007120000
(31) Priority Document No	:NA
(32) Priority Date	:NA
(33) Name of priority country	:NA
(86) International Application No	:PCT//
Filing Date	:01/01/1900
(87) International Publication No	: NA
(61) Patent of Addition to Application Number	:NA
Filing Date	:NA
(62) Divisional to Application Number	:NA
Filing Date	:NA

(71)**Name of Applicant :**
1)Prof (Dr.) Baswaraj Gadgay (Regional Director)
Address of Applicant :Visvesvaraya Technological University (VTU), Regional Campus, Kalaburagi-585105, Karnataka, India. E-mail : b_gadgay@rediffmail.com E-mail: baswaraj_gadgay@vtu.ac.in Mobile No.: +91 9448754546 Karnataka India
2)Mr. Thrivikram Bathini (Assistant Professor)
(72)**Name of Inventor :**
1)Prof (Dr.) Baswaraj Gadgay (Regional Director)
2)Mr. Thrivikram Bathini (Assistant Professor)

(57) Abstract :
ABSTRACT Our Invention Diagnosis and Analysis Brain Tumor Using Image Segmentation Technique is to an image are considered as most important invention of data/ information transfer. The invention images have to be analysis and information from them is extracted for further processing this is an important feature of Machine learning programming and alos the radiologists use X-rays, MRIs etc., and from these types of images, the work required commonality, time for processing or consumption and hence demand automation. Medical image processing is an important aspect in diagnosis and treatment strategy and also the tremendous volume of medical data has accelerated the need for automated analysis of this image, more so in the case Magnetic Resonance Imaging (MRI). The planned SVM classifier used a kernel within the sort of Gaussian radial basis operate kernel (GRB kernel) to boost the classifier performance. The performance of the classifier has been valid through professional clinical opinion and calculation of performance measures. The results amply illustrate the quality of the planned classifier.

No. of Pages : 15 No. of Claims : 5

(12) PATENT APPLICATION PUBLICATION
(21) Application No.202141024094 A
(19) INDIA
(22) Date of filing of Application :31/05/2021
(43) Publication Date : 11/06/2021

(54) Title of the invention : I-Mobile Charger: Automatic Disconnect the Charger if Mobile Battery Status-97%.

(51) International classification	:H02J0007000000, H04M0001040000, A61N0001020000, H04B0001388300, H02S0020100000
(31) Priority Document No	:NA
(32) Priority Date	:NA
(33) Name of priority country	:NA
(86) International Application No	:PCT//
Filing Date	:01/01/1900
(87) International Publication No	: NA
(61) Patent of Addition to Application Number	:NA
Filing Date	:NA
(62) Divisional to Application Number	:NA
Filing Date	:NA

(71)**Name of Applicant :**
1)Dr. D. M. K. Chaitanya (Associate Professor)
Address of Applicant :E.C.E Department, Vasavi College of Engineering, Ibrahimbagh, Hyderabad-500031, India. E-mail ID: chaitanyadmk@gmail.com Telangana India
2)Srilakshmi Aouthu (Associate Professor)
3)Narra Dhanalakshmi (Associate Professor)
4)J. L.V. Ramana Kumari (Assistant Professor)
5)K Jyostna (Assistant Professor)
(72)**Name of Inventor :**
1)Dr. D. M. K. Chaitanya (Associate Professor)
2)Srilakshmi Aouthu (Associate Professor)
3)Narra Dhanalakshmi (Associate Professor)
4)J. L.V. Ramana Kumari (Assistant Professor)
5)K Jyostna (Assistant Professor)

(57) Abstract :
ABSTRACT Our Invention I-Mobile Charger: Automatic Disconnect the Charger if Mobile Battery Status-97%.is to a smartphone wants battery supply to figure well. throughout the battery charging method, the state of charge may be inflated by up to 100-percent. One habit of charging batteries is to depart the smartphone connected to the charger all night long. Batteries that are already 100-percent however still connected to the charger can still receive an electrical current despite the fact that a tiny low price will cause a decrease in battery life and sturdiness. This invention is to make associate degree automatic battery charging system supported the automaton package. The results of this method are once proportion the share limit that we've got set is that the same because the percentage of the battery on the smartphone, the system can mechanically bring to an end the incoming current in order that the charging method can stop. The method is intended employing a microcontroller, Bluetooth module, relay module, automaton apps, associate degreed smartphone with an automaton package. The tests are the quality of the apps with the smartphone, the charging and discharging conditions on the system, and automatic battery charging. From the results of the tests, the system will cut the present to a price of zero amperes from the charger manually and mechanically controlled through the apps, the apps may be used on smartphones that have automaton version a pair of.1 or higher.

No. of Pages : 16 No. of Claims : 6

(12) PATENT APPLICATION PUBLICATION
(21) Application No.202141024095 A
(19) INDIA
(22) Date of filing of Application :31/05/2021
(43) Publication Date : 11/06/2021

(54) Title of the invention : Experimental Investigation on Performance of Passive Direct Methanol Fuel Cell using Taper Cylindrical Openings on Current Collectors.

(51) International classification	:H01M0008101100, H01M0004660000, H01M0008041860, H01M0004700000, H01M0008024700	(71)**Name of Applicant :** **1)N V Raghavaiah (Research Scholar)** Address of Applicant :Department of Mech Engineering, (NIT)National Institute of Technology Campus, Fathimanagar, Telangana 506004, India. Telangana India **2)Dr. G Naga Srinivasulu (Associate Professor)**
(31) Priority Document No	:NA	
(32) Priority Date	:NA	
(33) Name of priority country	:NA	
(86) International Application No	:PCT//	
Filing Date	:01/01/1900	
(87) International Publication No	: NA	
(61) Patent of Addition to Application Number	:NA	
Filing Date	:NA	
(62) Divisional to Application Number	:NA	
Filing Date	:NA	

(72)**Name of Inventor :**
1)N V Raghavaiah (Research Scholar)
2)Dr. G Naga Srinivasulu (Associate Professor)

(57) Abstract :
ABSTRACT Our Invention Experimental Investigation on Performance of Passive Direct Methanol Fuel Cell using Taper Cylindrical Openings on Current Collectors is to a Current Collectors (CC) design plays an important role in performance optimization of Passive Direct Methanol Fuel Cell (pDMFC) with the desirable properties of low electrical resistivity, high thermal conductivity and more durability in methanol environment. More weight of current collectors and difficulty in removal of generated reaction products are important hindrances in the contemporary pDMFC. These two aspects, i.e., reduction of current collectors™ weight and carbon dioxide (CO2) scavenging, are tackled in this paper by modifying the present design of uniform cylindrical openings to taper cylindrical openings. In this experimental study, Austenitic Stainless Steel Grade 316L has been selected as current collector material. Two types of current collector pairs are fabricated with 2 mm thick sheet, first one with taper cylindrical (frustum of cone) cross section having openings of 5.10 mm diameter on one side and 3.80 mm diameter on other side, and the second pair with uniform cylindrical cross section with 3.80 mm diameter openings with an opening ratio of 45.36%. Experiments are conducted at varying concentrations of methanol solution to study the performance of the cell. During the experiment, it is observed that the CO2 is getting expelled easily from taper cylindrical openings than that of uniform cylindrical openings. Polarization curves and power density curves are drawn for comparison of performance of these current collectors. The best power density obtained using taper cylindrical opening current collectors at a methanol concentration of 3M is 7.056 mWcm-2, whereas it is observed to be 5.219 mWcm-2 in case of uniform cylindrical openings at the same 3M methanol concentration. Hence the taper cylindrical openings are found performing better at 3M concentration than that of cylindrical openings by 35.19 % at its best power density point and further the theoretical weight of the current collectors is also got reduced by 7.5% leading to improvement in gravitational power density.

No. of Pages : 26 No. of Claims : 6

(12) PATENT APPLICATION PUBLICATION
(19) INDIA
(22) Date of filing of Application :31/05/2021
(21) Application No.202141024097 A
(43) Publication Date : 11/06/2021

(54) Title of the invention : ARTIFICIAL INTELLIGENCE BASED CONSTRUCTION OF MECHANICALLY DEVELOPED MACHINE MOTION PREDICTION SYSTEM TO REDUCE WORKSITE HAZARDS

(51) International classification	:G06N0003040000, G06K0009000000, G06K0009620000, G06N0003080000, G06T0007246000
(31) Priority Document No	:NA
(32) Priority Date	:NA
(33) Name of priority country	:NA
(86) International Application No	:PCT//
Filing Date	:01/01/1900
(87) International Publication No	: NA
(61) Patent of Addition to Application Number	:NA
Filing Date	:NA
(62) Divisional to Application Number	:NA
Filing Date	:NA

(71)**Name of Applicant :**
1)Dr. K. Arun Vasantha Geethan, St. Joseph's Institute of Technology
Address of Applicant :Professor and Head, Department of Mechanical Engineering, St. Joseph's Institute of Technology, A3-303, Valencia Apartment, Egattur, natham link road, Navalur, Chennai-603103 TamilNadu Mobile No: 9345032982 Mail id :kavgeeth@gmail.com Tamil Nadu India
2)Dr.D.Sengeni, CK College of Engineering and Technology
3)Dr.Sridevi Arumugam, Adithya Institute of Technology
4)Dr.Lanitha.B, Karpagam Academy of Higher Education
5)Venkataraman.K, KGiSL Institute of Technology
6)Rajat Srivastava, University of Petroleum and Energy Studies
7)Dr. Chandrashekar K., SJB Institute of Tech
8)Dr. Shivappa H.A., Dr. Ambedkar Institute of Technology
9)Dr. Pavithra G, Dayananda Sagar College of Engg. (DSCE)
10)Dr.I.Jerin Leno, DMI St John The Baptist University
11)Dr. Glorindal Selvam, DMI St John The Baptist University
12)M. Sathish Kumar, Hindusthan College of Engineering & Technology
13)P.Kaviya Priya, Hindusthan College of Engineering and Technology
14)T.Sakthi Sree, Hindusthan College of Engineering and Technology
(72)**Name of Inventor :**
1)Dr. K. Arun Vasantha Geethan, St. Joseph's Institute of Technology
2)Dr.D.Sengeni, CK College of Engineering and Technology
3)Dr.Sridevi Arumugam, Adithya Institute of Technology
4)Dr.Lanitha.B, Karpagam Academy of Higher Education
5)Venkataraman.K, KGiSL Institute of Technology
6)Rajat Srivastava, University of Petroleum and Energy Studies
7)Dr. Chandrashekar K., SJB Institute of Tech
8)Dr. Shivappa H.A., Dr. Ambedkar Institute of Technology
9)Dr. Pavithra G, Dayananda Sagar College of Engg. (DSCE)
10)Dr.I.Jerin Leno, DMI St John The Baptist University
11)Dr. Glorindal Selvam, DMI St John The Baptist University
12)M. Sathish Kumar, Hindusthan College of Engineering & Technology
13)P.Kaviya Priya, Hindusthan College of Engineering and Technology
14)T.Sakthi Sree, Hindusthan College of Engineering and Technology

(57) Abstract :
Construction sites are anguish from high hazard rates amongst all workplaces, making it a foremost anxiety to progress the on-site safety. The risky operation of construction machines is an important reason of fatal hazards happened on construction sites. This invention, motion data (i.e. locations, poses and movements) of each machine have been taken for activity recognition and machine pose prediction. Motion data can be understood by processing the collected signals using different algorithms depending on the purpose. Object detection models such as Faster R-CNN can be used for detecting machine locations while object tracking models such as Tracking-learning-detection can be applied for machine tracking. In terms of machine keypoints, methods are anticipated constructed on deep learning models for human-pose estimation models such as Cascaded Pyramid Network. Later on, the predictable activity information is then merged with historical pose data to predict future machine poses over a type of recurrent neural network (RNN), so-called Gated Recurrent Unit (GRU).

No. of Pages : 14 No. of Claims : 3

(12) PATENT APPLICATION PUBLICATION
(21) Application No.202141024128 A
(19) INDIA
(22) Date of filing of Application :31/05/2021
(43) Publication Date : 11/06/2021

(54) Title of the invention : Novel process for the preparation of (R)-3-(4-(7H-Pyrrolo[2,3-d] pyrimidin-4-yl)-1H-pyrazol-1-yl)-3-cyclopentylpropanenitrile phosphate

(51) International classification	:C07D0487040000, A61K0031519000, C08K0003320000, C07D0403040000, C01B0025450000
(31) Priority Document No	:NA
(32) Priority Date	:NA
(33) Name of priority country	:NA
(86) International Application No	:PCT//
Filing Date	:01/01/1900
(87) International Publication No	: NA
(61) Patent of Addition to Application Number	:NA
Filing Date	:NA
(62) Divisional to Application Number	:NA
Filing Date	:NA

(71)**Name of Applicant :**
1)Acebright (India) Pharma Pvt. Ltd.
Address of Applicant :116/117 KIADB Industrial Area Jigani, Bangalore Karnataka India 560 105 Karnataka India
(72)**Name of Inventor :**
1)Mr. Rajeev Venkatesh Jahagirdar
2)Mr. S Syed Ibrahim

(57) Abstract :
The present invention is related to a processes for preparing a (R)-3-(4- (7H-pyrrolo[2,3d-] pyrimidin-4-yl)- 1 H-pyrazol- 1 -yl)-3-cyclopentylpropanenitrile phosphate, and related synthetic intermediate compounds. This novel process for the preparation of Ruxolitinib phosphate is cost-effective and is suitable for industrial production. The Ruxolitinib phosphate is represented by following structural Formula-I.

No. of Pages : 21 No. of Claims : 9

(12) PATENT APPLICATION PUBLICATION
(21) Application No.202141024267 A
(19) INDIA
(22) Date of filing of Application :31/05/2021
(43) Publication Date : 11/06/2021

(54) Title of the invention : A METHOD OF NON-CONTACT HERMETIC SEALING OF LTCC MODULES WITH PULSED LASER

(51) International classification	:H01L0023100000, H01R0013520000, H01L0023580000, H01L0021500000, H01L0021480000
(31) Priority Document No	:NA
(32) Priority Date	:NA
(33) Name of priority country	:NA
(86) International Application No	:PCT//
Filing Date	:01/01/1900
(87) International Publication No	: NA
(61) Patent of Addition to Application Number	:NA
Filing Date	:NA
(62) Divisional to Application Number	:NA
Filing Date	:NA

(71)**Name of Applicant :**
1)Indian Space Research Organisation
Address of Applicant :Department of Space, Antariksh Bhavan, New BEL Road, Bangalore, India Karnataka India
(72)**Name of Inventor :**
1)Shivendra Tripathi
2)Sakaram Srinivasulu
3)Punam Pradeep Kumar
4)Apurba N. Bhattachrya

(57) Abstract :
The embodiments herein provide a method of Non-contact Hermetic Sealing of LTCC modules. The method comprising mounting a LTCC Substrate assembly over alloy carrier with epoxy for handling or fastening purposes. Further, the method includes soldering the Multilayer LTCC substrate with a seal ring having individual walls for electromagnetic isolation. Further, the method includes placing a Cover lid over the Seal ring such that a mechanical interface of the seal ring and the cover lid joint fit-up and forms uniform plane surface. Further, the method includes performing a non-contact pulsed based LASER sealing at the mechanical interface of the seal ring and the cover lid to seal the seal ring and the cover lid to create hermetically sealed LTCC module. The sealing is performed inside a controlled glovebox with inert environment to create the hermetically sealed LTCC module.

No. of Pages : 25 No. of Claims : 10

(12) PATENT APPLICATION PUBLICATION
(21) Application No.202141024307 A
(19) INDIA
(22) Date of filing of Application :31/05/2021
(43) Publication Date : 11/06/2021

(54) Title of the invention : System and Method to Detect Fake Profiles in Social Media

(51) International classification	:G06Q0050000000, H04L0029080000, H04L0012580000, G06Q0030020000, H04L0029060000
(31) Priority Document No	:NA
(32) Priority Date	:NA
(33) Name of priority country	:NA
(86) International Application No	:PCT//
Filing Date	:01/01/1900
(87) International Publication No	: NA
(61) Patent of Addition to Application Number	:NA
Filing Date	:NA
(62) Divisional to Application Number	:NA
Filing Date	:NA

(71)**Name of Applicant :**
1)Dr.Nirmala C R
Address of Applicant :Professor and Head, Dept.of Computer Science and Engineering, Bapuji Institute of Engineering and Technology, #325, Shamanur Road, Davangere -577004, Karnataka, India Karnataka India
2)Dr. R. Jagadeesh Kannan
3)Dr. Sudhir Kumar Sharma
4)Dr. J. Jeyapriya
5)Dr Satish Rupraoji Billewar
6)Dr. Anirban Mitra
7)Dr. Anirban Das
8)Mr.Mohammed Firdos Alam Sheikh
9)Dr Vaneet Kumar
10)Dr. Ansuman Sahoo
11)Dr. Mohd Naved
12)Sanjeev Kumar Singh
13)Ravi Shanker Pathak
14)Dr.S.Balamurugan
(72)**Name of Inventor :**
1)Dr.Nirmala C R
2)Dr. R. Jagadeesh Kannan
3)Dr. Sudhir Kumar Sharma
4)Dr. J. Jeyapriya
5)Dr Satish Rupraoji Billewar
6)Dr. Anirban Mitra
7)Dr. Anirban Das
8)Mr.Mohammed Firdos Alam Sheikh
9)Dr Vaneet Kumar
10)Dr. Ansuman Sahoo
11)Dr. Mohd Naved
12)Sanjeev Kumar Singh
13)Ravi Shanker Pathak
14)Dr.S.Balamurugan

(57) Abstract :
The System and Methods to Detect Fake Profiles in Social Media (SMDFP) helps the social media organization can make use of the SMDFP to match the new user with existing user details and activities to identify whether the new user is fake or not. The user database is used to store all the user account details in the database. User friends list is the number of friends in his/her contact list. The chat history can contain the time of chat and content of chat to a specific friend. The user account details give the full information about the user and the IP address provides where the user normally connected with which device. User profile photo and photo gallery helps to analyze the multimedia communication between the friend's list. Cloud storage provides the facility to store all social media information in the cloud for centralized access. The above-mentioned information is matched with existing user profiles with a new user profile to compare their similarity. If similarity exists then the new user profile will assign a similarity score. The process gets continued up until to score reaches the threshold value. Once the score reaches the threshold value then the new user profile will automatically be blocked. The SMDFP control unit helps to monitoring and managing the successful functioning of the whole SMDFP system. By using this SMDFP, the social media organization can make use of the SMDFP to match the new user with existing user details and activities to identify whether the new user is fake or not.

No. of Pages : 16 No. of Claims : 3

(12) PATENT APPLICATION PUBLICATION
(21) Application No.202141024309 A
(19) INDIA
(22) Date of filing of Application :01/06/2021
(43) Publication Date : 11/06/2021

(54) Title of the invention : AUTOMATIC CROP PREDICTOR

(51) International classification	:G06N0020000000, G01N0033240000, G06N0003080000, A01G0025160000, G06Q0050020000
(31) Priority Document No	:NA
(32) Priority Date	:NA
(33) Name of priority country	:NA
(86) International Application No	:PCT//
Filing Date	:01/01/1900
(87) International Publication No	: NA
(61) Patent of Addition to Application Number	:NA
Filing Date	:NA
(62) Divisional to Application Number	:NA
Filing Date	:NA

(71)**Name of Applicant :**
1)Er. Abraham George
Address of Applicant :Assistant Professor Department of Electrical and Electronics SAINTGITS College of Engineering, Kottukulam Hills Pathamuttom P. O Kottayam 686532 KERALA Kerala India
2)Margaret Sara Thomas
(72)**Name of Inventor :**
1)Er. Abraham George
2)Margaret Sara Thomas

(57) Abstract :
Artificial Intelligence (A.I) according to entrepreneurs is the future, giving the machines the power to take decisions with amount of coding. It is important to meet the food requirements of all the people. The selection of crops which can be grown over a given piece of land is important to produce maximum crops on the limited piece of land. Taking different parameters such as soil type, pH value, temperature, humidity, soil moisture into consideration and fed into the trained machine learning model to predict the suitable crop that can be grown on a piece of land.

No. of Pages : 11 No. of Claims : 4

(12) PATENT APPLICATION PUBLICATION
(21) Application No.202141024318 A
(19) INDIA
(22) Date of filing of Application :01/06/2021
(43) Publication Date : 11/06/2021

(54) Title of the invention : MULTI-BAND RECONFIGURABLE AND FLEXIBLE ANTENNA

(51) International classification	:H01Q0001480000, H01Q0001380000, H01Q0009420000, H01Q0009300000, H01Q0009400000
(31) Priority Document No	:NA
(32) Priority Date	:NA
(33) Name of priority country	:NA
(86) International Application No	:PCT//
Filing Date	:01/01/1900
(87) International Publication No	: NA
(61) Patent of Addition to Application Number	:NA
Filing Date	:NA
(62) Divisional to Application Number	:NA
Filing Date	:NA

(71)**Name of Applicant :**
1)M N V S S Kumar
Address of Applicant :Department of Electronics and Communication Engineering, Aditya Institute of Technology and Management, Tekkali, Srikakulam-532201, Andhra Pradesh, India Andhra Pradesh India
2)Koduri Sreelakshmi
3)Gottapu Sasibhushana Rao
(72)**Name of Inventor :**
1)M N V S S Kumar
2)Koduri Sreelakshmi
3)Gottapu Sasibhushana Rao

(57) Abstract :
Embodiments of the present disclosure provide a multi-band reconfigurable and flexible antenna (100). The multi-band reconfigurable and flexible antenna comprising a substrate (110). The substrate comprising a monopole patch (106) connected to a feedline (112), wherein corners of the monopole patch are truncated on a left side and a U-shaped slot is cut on the monopole patch at a right side for better impedance matching; an inverted L-shaped monopole (114) connected to the monopole patch; an F-shaped monopole (116) connected to the monopole patch; at least two PIN diode switches (102, 104), wherein a first PIN diode switch (102) of the at least two PIN diode switches is embedded between the monopole patch and the F-shaped monopole, wherein a second PIN diode switch (104) of the at least two PIN diode switches is embedded between the monopole patch and the inverted L-shaped monopole to provide flexible frequency reconfigurable performance; and one or more ground planes (108)..The antenna is fed by the grounded asymmetric coplanar strip (GACS) feed 112, where a grounded asymmetric coplanar strip (GACS) is a modification of an ACS and the additional ground plane 108 is used on the back of the substrate 110 and the bottom ground plane 108 is spaced 1.53 mm beneath the top ground to decrease backward radiation.

No. of Pages : 28 No. of Claims : 10

(12) PATENT APPLICATION PUBLICATION
(19) INDIA
(22) Date of filing of Application :01/06/2021

(21) Application No.202141024377 A
(43) Publication Date : 11/06/2021

(54) Title of the invention : Printed patch antenna with fractal geometry for low band 5G frequencies ranging 25GHz to 35GHz

(51) International classification	:H01Q0009040000, H01Q0001380000, H01Q0021060000, H01Q0001360000, B82Y0040000000
(31) Priority Document No	:NA
(32) Priority Date	:NA
(33) Name of priority country	:NA
(86) International Application No	:PCT//
Filing Date	:01/01/1900
(87) International Publication No	: NA
(61) Patent of Addition to Application Number	:NA
Filing Date	:NA
(62) Divisional to Application Number	:NA
Filing Date	:NA

(71)**Name of Applicant :**
1)Abdul Rahim
Address of Applicant :First Floor, 79/A, Shivani Nagar Road no 2, Opposite to indane petrol pump Bandlaguda-Nagole, Hyderabad 500068 Telangana India
2)PRAVEEN KUMAR MALIK
3)Anurag Joshi
4)Mahesh Kumar Aghwariya
5)Manish Sharma
6)Pavan Kumar Shukla
(72)**Name of Inventor :**
1)Abdul Rahim
2)PRAVEEN KUMAR MALIK
3)Anurag Joshi
4)Mahesh Kumar Aghwariya
5)Manish Sharma
6)Pavan Kumar Shukla

(57) Abstract :
The invention relates to the design of a Microstrip patch antenna with fractal geometry suitable for the low band 5G frequencies ranging 25GHz to 35 GHz. The antenna is fabricated using Rogers RO 4003 dielectric material substrate with a thickness of 0.55mm, the dielectric constant (Îµr) of 3.55 and, loss tangent of 0.0027. The substrate dimensions are 50 x 38 x 0.55mm3, with a rectangular feed line. The ground is designed using the concept of recessed ground (defected) to achieve good stability. Antenna design is selected such a way that it can be used for applications such as vehicular communications, device to device communications, wide band applications and sensor networks. The antenna is designed and simulated using HFSS v15, fabricated using compact computer numerical control and tested using Agilent Technologies N5247A series 2-Port VNA available from 100KHz to 40GHz frequency.

No. of Pages : 14 No. of Claims : 8

(12) PATENT APPLICATION PUBLICATION
(21) Application No.202141024465 A
(19) INDIA
(22) Date of filing of Application :01/06/2021
(43) Publication Date : 11/06/2021

(54) Title of the invention : A VEHICLE SIMULATION TOOL BY PROVIDING WSN INSIDE THE VEHICLE WITH AI & ML BASED INTERFACES

(51) International classification	:G06N0020000000, B60W0050080000, B60W0050140000, H04W0084180000, A61B0005000000
(31) Priority Document No	:NA
(32) Priority Date	:NA
(33) Name of priority country	:NA
(86) International Application No	:PCT//
Filing Date	:01/01/1900
(87) International Publication No	: NA
(61) Patent of Addition to Application Number	:NA
Filing Date	:NA
(62) Divisional to Application Number	:NA
Filing Date	:NA

(71)**Name of Applicant :**
1)Dr.Karthikeyan Palaniappan
Address of Applicant :Associate Professor, Center for System Design, Chennai Institute of Technology, Chennai, Tamil Nadu, India. Pin Code:600069 Tamil Nadu India
2)Mr.Mahmad Ziya Gous
3)Dr.Vignesh Ramamoorthy H
4)Mr.Sandeep Srivastava
5)Mr.M.Rajkumar
6)Dr.A.Geetha
7)Mr.Tarun Jaiswal
8)Dr.K.Swathi
9)Dr.Sushma Jaiswal
10)Mr.Miranji Katta
(72)**Name of Inventor :**
1)Dr.Karthikeyan Palaniappan
2)Mr.Mahmad Ziya Gous
3)Dr.Vignesh Ramamoorthy H
4)Mr.Sandeep Srivastava
5)Mr.M.Rajkumar
6)Dr.A.Geetha
7)Mr.Tarun Jaiswal
8)Dr.K.Swathi
9)Dr.Sushma Jaiswal
10)Mr.Miranji Katta

(57) Abstract :
ABSTRACT A VEHICLE SIMULATION TOOL BY PROVIDING WSN INSIDE THE VEHICLE WITH AI & ML BASED INTERFACES [033] The present invention discloses a vehicle simulation system and tool by providing varied detection for driver with respect to physical and body vitals competency level to drive a vehicle with an Artificial Intelligence (AI) & Machine Learning (ML) based interfaces and method thereof. The vehicle simulation system and tool includes, but not limited to, a plurality of wireless sensors network (WSN) installed inside the vehicle; a display unit having a graphical user interface; a processing unit to receive input from the WSN and activate the other means which needs to be triggered according to the desired driving competency level and a driving seat comfortable level. Further, the processing unit evaluates the desired driving competency level and the driving seat comfortable level by using the trained data through the Artificial Intelligence (AI) & Machine Learning (ML) based interfaces. Accompanied Drawing [FIG. 1]

No. of Pages : 20 No. of Claims : 9

(12) PATENT APPLICATION PUBLICATION
(21) Application No.202141024477 A
(19) INDIA
(22) Date of filing of Application :01/06/2021
(43) Publication Date : 11/06/2021

(54) Title of the invention : A NOVEL LC-MS METHOD FOR SIMULTANEOUS ESTIMATION OF OLMESARTAN MEDOXOMIL AND AMILODIPINE BESYLATE

(51) International classification	:A61K0031442200, A61K0031417800, G01N0030340000, C12Q0001180000, G01N0033558000	(71)**Name of Applicant :**
(31) Priority Document No	:NA	**1)Dr. SONIA K**
(32) Priority Date	:NA	Address of Applicant :SRM COLLEGE OF PHARMACY, SRM IST, SRM NAGAR, KATTANKULATHUR-603203, CHENGALPATTU, TAMIL NADU, INDIA Tamil Nadu India
(33) Name of priority country	:NA	**2)Dr. M.N. NAPPINNAI**
(86) International Application No	:PCT//	**3)Dr. MANIKANDAN K**
Filing Date	:01/01/1900	**4)Dr. SAROJ YADAV**
(87) International Publication No	: NA	**5)Dr. Om Prakash**
(61) Patent of Addition to Application Number	:NA	(72)**Name of Inventor :**
Filing Date	:NA	**1)Dr. SONIA K**
(62) Divisional to Application Number	:NA	**2)Dr. M.N. NAPPINNAI**
Filing Date	:NA	**3)Dr. MANIKANDAN K**
		4)Dr. SAROJ YADAV
		5)Dr. Om Prakash

(57) Abstract :
The present innovation relates to develop a simple, rapid and sensitive stability indicating method for simultaneous estimation of analytes (Olmesartan medoxomil and Amilodipine besylate) as an active pharmaceutical ingredient in bulk drug and fixed dose formulation using Liquid Column-Mass Spectrometry (LC-MS) methods. The innovative method is successfully conducted a forced degradation study on Olmesartan medoxomil and Amlodipine besylate to determine the percentage degradation under respective stress condition. The developed cost-effective method can be used by testing laboratory for the quantitative analysis of two drugs simultaneously with high degree of accuracy and precision.

No. of Pages : 17 No. of Claims : 10

(12) PATENT APPLICATION PUBLICATION
(21) Application No.202141024577 A
(19) INDIA
(22) Date of filing of Application :02/06/2021
(43) Publication Date : 11/06/2021

(54) Title of the invention : A METHOD AND SYSTEM FOR OBSTACLE DETECTION USING SMART WALKING STICK FOR BLIND AND VISUALLY IMPAIRED PERSONS

(51) International classification	:A61H0003060000, G08B0021020000, G09B0021000000, G01S0015930000, A45B0003000000
(31) Priority Document No	:NA
(32) Priority Date	:NA
(33) Name of priority country	:NA
(86) International Application No	:PCT//
Filing Date	:01/01/1900
(87) International Publication No	: NA
(61) Patent of Addition to Application Number	:NA
Filing Date	:NA
(62) Divisional to Application Number	:NA
Filing Date	:NA

(71)**Name of Applicant :**
1)Dr. S. Pravinth Raja
Address of Applicant :Associate Professor Department of CSE Presidency University Yelahanka Bangalore, Karnataka Karnataka India
2)Dr.C. Kalaiarasan
3)Ms.R.Sapna
(72)**Name of Inventor :**
1)Dr. S. Pravinth Raja
2)Dr.C. Kalaiarasan
3)Ms.R.Sapna

(57) Abstract :
ABSTRACT A METHOD AND SYSTEM FOR OBSTACLE DETECTION USING SMART WALKING STICK FOR BLIND AND VISUALLY IMPAIRED PERSONS Aspects of the present disclosure relate a method (100) for obstacle detection (102) using smart walking stick system (200) for blind and visually impaired persons. The said system includes an obstacle avoidance module (202) for detecting obstacles, the obstacle avoidance module (202) includes an infrared obstacle avoidance unit (204) for detecting narrow passageways and steps and an ultrasonic ranging obstacle avoidance unit (206) for surveying barrier of distance and show roadblock distance condition. A help seeking module (208) is used for carrying out voice help seeking on nearby people, the help seeking module (208) includes a voice help seeking module (208) unit and a remote communication help seeking unit. A GPS (210) module is used for sending positioning information and speed information of the smart walking stick system (200) to a cloud server database through a GPRS (212) communication module for storage. A WhatsApp small program unit (216) for monitoring the operation terminal by a guardian of the blind person. A core module (214) including a nine-axis accelerometer gyro sensor (MPU6050) and a temperature sensor. We also have the method (100) of detection described in the invention. (FIG. 1 will be the reference figure)

No. of Pages : 22 No. of Claims : 5

(12) PATENT APPLICATION PUBLICATION
(19) INDIA
(22) Date of filing of Application :02/06/2021

(21) Application No.202141024580 A
(43) Publication Date : 11/06/2021

(54) Title of the invention : AN IMPROVED PROCESS FOR THE PREPARATION OF DIBENZO DIAZEPINE DERIVATIVE

(51) International classification	:A61K0031551300, A61K0031415000, C01B0013180000, A61K0031421000, A01N0025340000
(31) Priority Document No	:NA
(32) Priority Date	:NA
(33) Name of priority country	:NA
(86) International Application No	:PCT// /
Filing Date	:01/01/1900
(87) International Publication No	: NA
(61) Patent of Addition to Application Number	:NA
Filing Date	:NA
(62) Divisional to Application Number	:NA
Filing Date	:NA

(71)**Name of Applicant :**
1)GLOBAL CALCIUM PVT. LTD.
Address of Applicant :125 & 126, Sipcot Industrial complex, Hosur. Tamil Nadu India
(72)**Name of Inventor :**
1)VAZIRALLY SAHIL
2)YADAVALLI SUNEEL KUMAR
3)CHANGALARAYA DASARADHAN
4)NAVANEETHA KRISHNAN GANESAN
5)SARAVANAN MOHAN KUMAR

(57) Abstract :
The present invention relates to an improved process for the preparation of Clozapine of formula-1 which is simple, safe, economic, eco-friendly process and suitable on commercial scale with high reproducibility. Formula-1

No. of Pages : 26 No. of Claims : 6

(12) PATENT APPLICATION PUBLICATION
(19) INDIA
(22) Date of filing of Application :02/06/2021
(21) Application No.202141024596 A
(43) Publication Date : 11/06/2021

(54) Title of the invention : SYSTEM OF MATHEMATICAL MODELLING OF NEW THEORY OF SOCIAL INTELLIGENCE

(51) International classification	:G06Q0050000000, A61K0039000000, G16C0020300000, G06Q0010060000, B25J0009160000
(31) Priority Document No	:NA
(32) Priority Date	:NA
(33) Name of priority country	:NA
(86) International Application No	:PCT//
Filing Date	:01/01/1900
(87) International Publication No	: NA
(61) Patent of Addition to Application Number	:NA
Filing Date	:NA
(62) Divisional to Application Number	:NA
Filing Date	:NA

(71)**Name of Applicant :**
1)Dr. Sameer Babu M
Address of Applicant :Assistant Professor, Department of Education, University of Kerala , Thiruvananthapuram, Kerala, India Kerala India
2)Dr. Sarwat Ali
3)Prof. Riaz Shakir Khan
(72)**Name of Inventor :**
1)Dr. Sameer Babu M
2)Dr. Sarwat Ali
3)Prof. Riaz Shakir Khan

(57) Abstract :
The present invention relates to system of mathematical modelling of new theory of social intelligence. The objective of the present invention is to solve the problems in the prior art technologies related to social behavior analysis using computer mathematical model.

No. of Pages : 30 No. of Claims : 3

(12) PATENT APPLICATION PUBLICATION
(21) Application No.202141024665 A
(19) INDIA
(22) Date of filing of Application :03/06/2021
(43) Publication Date : 11/06/2021

(54) Title of the invention : A LOW-COST PORTABLE DEVICE FOR EVALUATING STRETCH FORMABILITY AT VARYING TEMPERATURES AND STRAIN-PATHS

(51) International classification	:F27D0011020000, G01N0027120000, G01N0025000000, G01N0011040000, G01N0003080000
(31) Priority Document No	:NA
(32) Priority Date	:NA
(33) Name of priority country	:NA
(86) International Application No	:PCT//
Filing Date	:01/01/1900
(87) International Publication No	: NA
(61) Patent of Addition to Application Number	:NA
Filing Date	:NA
(62) Divisional to Application Number	:NA
Filing Date	:NA

(71)**Name of Applicant :**
1)INDIAN INSTITUTE OF TECHNOLOGY MADRAS (IIT MADRAS)
Address of Applicant :The Dean, Industrial Consultancy & Sponsored Research [IC&SR], Indian Institute of Technology Madras, Sardar Patel Road, IITP.O, Chennai, Tamil Nadu, India, Pincode -600036 Tamil Nadu India
(72)**Name of Inventor :**
1)RAKESH KUMAR
2)DR. SUSHANTA KUMAR PANIGRAHI

(57) Abstract :
A low-cost portable device for evaluating stretch formability at varying temperatures and strain-paths, is disclosed herein. The device (100) comprises a die (08), a punch (18), a sample holder, an electrical resistance technology-based heater plate (11), a gearbox (19), thrust bearing (20), guides (02), guide pillars (01 and 16), slider plates (06, 09 and 14), heat insulating rings (07, and 10), ceramic tube (12), bushings (03 and 04), a handle drive (05), a bed (17) and sensors (temperature) at the heating coil (25), a load cell (15), load cell and digital indicators (27, 28 and 29). The device has capability to test sample width of various sizes ranging from 3 mm to 70 mm and thickness between 0.2 mm to 2 mm. The gearbox (19) with worm drive arrangement makes it easier to operate manually with high precision. The horizontal design configuration makes the Digital Image Correlation (DIC) integration extremely easy and simple.

No. of Pages : 22 No. of Claims : 6

(12) PATENT APPLICATION PUBLICATION
(21) Application No.202141024721 A
(19) INDIA
(22) Date of filing of Application :03/06/2021
(43) Publication Date : 11/06/2021

(54) Title of the invention : A NOVEL GRAPHICAL AUTHENTICATION METHOD TO MITIGATE SHOULDER SURFING ASSAULT

(51) International classification	:H04L0029060000, G06F0021360000, G06F0021310000, H04L0009320000, G06Q0020120000	(71)**Name of Applicant :** **1)Norman Dias** Address of Applicant :(Research Scholar), CSE Department, School of Engineering, Dayananda Sagar University, Devarakaggalahalli, Harohalli, Kanakapura Road, Bengaluru. Karnataka India **2)Dr Reeja S R**
(31) Priority Document No	:NA	
(32) Priority Date	:NA	
(33) Name of priority country	:NA	
(86) International Application No	:PCT//	(72)**Name of Inventor :**
Filing Date	:01/01/1900	**1)Norman Dias**
(87) International Publication No	: NA	**2)Dr Reeja S R**
(61) Patent of Addition to Application Number	:NA	
Filing Date	:NA	
(62) Divisional to Application Number	:NA	
Filing Date	:NA	

(57) Abstract :
ABSTRACT A novel graphical authentication method based on recall and recognition in the area of Human- Computer- Interaction (HCI), which is based on Data mining (DM) and Image processing (IP) techniques, provides the user with a different set of unique and dynamic password every time the user is authenticated by the system, in an interactive environment, also the system does not burden the human brain in memorizing difficult passwords across various online accounts, the created password cannot be verbally described nor written down on a piece of paper . The system can be effectively integrated on the latest touch screen devices as well on existing web based terminals. The (HCI) based system further increases the password space in comparison to any traditional graphical authentication methods and also mitigates the risk of shoulder surfing attack that could be carried out either physically or automated.

No. of Pages : 13 No. of Claims : 9

(12) PATENT APPLICATION PUBLICATION
(21) Application No.202141024729 A
(19) INDIA
(22) Date of filing of Application :03/06/2021
(43) Publication Date : 11/06/2021

(54) Title of the invention : ARTIFICIAL UMPIRING SYSTEM EMBEDDED IN CRICKET STUMP

(51) International classification	:A63B0071060000, A63B0102200000, A63F0013213000, H04N0021218700, A63F0013870000	(71)**Name of Applicant :** **1)Dr. Shermin S** Address of Applicant :Amjad Bhavan, Nalumukku, Mankamkuzhy P.O, Mavelikara-690558 Kerala India **2)Ajesh F** **3)Binu Dennis** **4)Rajakumar B. R.**
(31) Priority Document No	:NA	
(32) Priority Date	:NA	
(33) Name of priority country	:NA	
(86) International Application No	:PCT//	(72)**Name of Inventor :** **1)Dr. Shermin S** **2)Ajesh F** **3)Binu Dennis** **4)Rajakumar B. R.**
Filing Date	:01/01/1900	
(87) International Publication No	: NA	
(61) Patent of Addition to Application Number	:NA	
Filing Date	:NA	
(62) Divisional to Application Number	:NA	
Filing Date	:NA	

(57) Abstract :
The main purpose of this present invention is to perform the role of an umpire by using Artificial Umpiring System (AUS). In this present invention, the AUS is embedded within the stump to inform the score and condition of the game to the audience and players. Initially, the camera starts to capture the live video of the cricket to check players™ movement, and the microphone records the audio signal and vibration signal. Then, the captured information will be processed in the processing system and produce the output in speech format and light format. The lighting system is placed at the bottom of the cricket stump, in which the light will be glowing as red for negative comment and green for the positive comment. The target scores, current scores, required run rate, wickets, boundaries, remaining over, etc., will be displayed on the scoreboard. [To be published with Figure.1]

No. of Pages : 19 No. of Claims : 6

(12) PATENT APPLICATION PUBLICATION
(19) INDIA
(22) Date of filing of Application :03/06/2021
(21) Application No.202141024734 A
(43) Publication Date : 11/06/2021

(54) Title of the invention : SMART HELMET WITH BIKE SYSTEM FOR SAFETY TRANSPORTATION

(51) International classification	:A42B0003040000, G08B0021040000, A42B0003300000, A41D0013018000, H04W0088060000
(31) Priority Document No	:NA
(32) Priority Date	:NA
(33) Name of priority country	:NA
(86) International Application No	:PCT//
Filing Date	:01/01/1900
(87) International Publication No	: NA
(61) Patent of Addition to Application Number	:NA
Filing Date	:NA
(62) Divisional to Application Number	:NA
Filing Date	:NA

(71)**Name of Applicant :**
1)Mr. DILEEP J
Address of Applicant :Designation: Assistant Professor Department: Electronics and Telecommunication Engineering Institution address: K. S. Institute of Technology, No.14, Raghuvanahalli, Kanakpura road, Bengaluru-560109 Email id: dileepj@ksit.edu.in Mobile No: 8867781213 Karnataka India
2)Dr. Chanda V Reddy
3)Dr. Devika B
4)Mrs. V Sangeetha
5)Mr. Praveen A
6)Apoorva PM
7)Rachana Giliyal
8)Sahana R
9)Dr. Chethana Sridhar
(72)**Name of Inventor :**
1)Mr. DILEEP J
2)Dr. Chanda V Reddy
3)Dr. Devika B
4)Mrs. V Sangeetha
5)Mr. Praveen A
6)Apoorva PM
7)Rachana Giliyal
8)Sahana R
9)Dr. Chethana Sridhar

(57) Abstract :
ABSTRACT Smart helmet • looks like a normal helmet, but it consists of some remarkable sensors, networks with communication modules, which helps to stop the drive or not to allow the driving at the critical or abnormal situations. The distinctive utility of this Invention is fall detection, if the bike rider falls from the bike, it will send message to the registered phone numbers impulsively. The Invention discloses a smart helmet capable of alerting rider in critical situations and alerting family members or emergency numbers in case of accident. The Invention tries to address the issues on Riders safety on roads.

No. of Pages : 12 No. of Claims : 1

(12) PATENT APPLICATION PUBLICATION
(21) Application No.202141024795 A
(19) INDIA
(22) Date of filing of Application :03/06/2021
(43) Publication Date : 11/06/2021

(54) Title of the invention : SYSTEM FOR CLOUD COMPUTING FRAMEWORK BASED ON VISUAL DATA MINING ARCHITECTURE

(51) International classification	:G06F0016245800, G06N0003080000, G06F0016260000, G06F0009455000, H04L0029080000
(31) Priority Document No	:NA
(32) Priority Date	:NA
(33) Name of priority country	:NA
(86) International Application No	:PCT//
Filing Date	:01/01/1900
(87) International Publication No	: NA
(61) Patent of Addition to Application Number	:NA
Filing Date	:NA
(62) Divisional to Application Number	:NA
Filing Date	:NA

(71)**Name of Applicant :**
1)DR.D.SENTHIL
Address of Applicant :Head & Assistant Professor, Department of Computer Science (Shift II) , Nazareth College of Arts and Science, Chennai, India Tamil Nadu India
2)DR.S.ELAVARASI
3)DR.A.VINOTH
4)DR.MEGALA R
5)DR.V.UMADEVI
6)DR.SREEJITH VIGNESH B P
7)P.AMUTHA
8)DR.K.MUNUSAMY
9)KAVIYARASI R
(72)**Name of Inventor :**
1)DR.D.SENTHIL
2)DR.S.ELAVARASI
3)DR.A.VINOTH
4)DR.MEGALA R
5)DR.V.UMADEVI
6)DR.SREEJITH VIGNESH B P
7)P.AMUTHA
8)DR.K.MUNUSAMY
9)KAVIYARASI R

(57) Abstract :
The present invention relates to system for cloud computing framework based on visual data mining architecture. The objective of the present invention is to solve the problems in the prior art technologies related to data mining architecture for cloud computing.

No. of Pages : 28 No. of Claims : 4

(12) PATENT APPLICATION PUBLICATION
(19) INDIA
(22) Date of filing of Application :03/06/2021
(21) Application No.202141024812 A
(43) Publication Date : 11/06/2021

(54) Title of the invention : CLOUD BASED SECURED DATA TRANSMISSION USING TRAPDOOR ENCRYPTION

(51) International classification	:H04L0009080000, H04L0009320000, H04L0009300000, H04L0029060000, G06F0021620000
(31) Priority Document No	:NA
(32) Priority Date	:NA
(33) Name of priority country	:NA
(86) International Application No	:PCT//
Filing Date	:01/01/1900
(87) International Publication No	: NA
(61) Patent of Addition to Application Number	:NA
Filing Date	:NA
(62) Divisional to Application Number	:NA
Filing Date	:NA

(71)**Name of Applicant :**
1)Mrs. THIRUPURASUNDARI D R
Address of Applicant :ASSISTANT PROFESSOR DEPARTMENT OF COMPUTER SCIENCE ENGINEERING MEENAKSHI COLLEGE OF ENGINEERING NO-12, VEMBULIAMMAN KOIL STREET, WEST K.K NAGAR, CHENNAI - 600 078. Tamil Nadu India
2)Dr. SUMA SIRA JACOB
3)Dr A.HEMLATHADHEVI
4)Mrs. V. VIJAYALAKSHMI
5)Dr. K. ANAND
6)Ms.R.PAVAIYARKARASI
7)Mr.C RAMESH KUMAR
8)Dr. DASARI KIRAN KUMAR
9)Mr. BISWADIP BASU MALLIK
(72)**Name of Inventor :**
1)Mrs. THIRUPURASUNDARI D R
2)Dr. SUMA SIRA JACOB
3)Dr A.HEMLATHADHEVI
4)Mrs. V. VIJAYALAKSHMI
5)Dr. K. ANAND
6)Ms.R.PAVAIYARKARASI
7)Mr.C RAMESH KUMAR
8)Dr. DASARI KIRAN KUMAR
9)Mr. BISWADIP BASU MALLIK

(57) Abstract :
ABSTRACT CLOUD BASED SECURED DATA TRANSMISSION USING TRAPDOOR ENCRYPTION Cloud administrations have become an amazing design to perform complex huge scope figuring errands and length a scope of IT capacities from capacity and calculation of information base and application administrations. Distributed computing has various good angles to address the fast development of financial aspects and innovative boundaries. While enlisting the subtleties, each client gets a public key and private key. Information proprietor creates set of hidden entryway keys and ABE key which are sent to the client. 3 - 4 Trapdoor keys are created and everybody is a couple of keys. At the point when worker creates one key client needs to give another pair of the keys. Any document content is covered up with any picture made stegano, the interaction steganography and shipped off the worker. Worker destegano the picture and afterward gets the other pair of the secret entryway key and checks for confirmation. After confirmation worker checks the entrance strategy for information access through ABE.

No. of Pages : 28 No. of Claims : 8

(12) PATENT APPLICATION PUBLICATION
(21) Application No.202141024843 A
(19) INDIA
(22) Date of filing of Application :04/06/2021
(43) Publication Date : 11/06/2021

(54) Title of the invention : AN INTELLECTUAL APPROACH FOR ENERGY PRESERVATION IN COMMUNAL LIGHTNING SCHEME USING IOT

(51) International classification	:G06Q0010060000, F21W0131103000, H02J0003460000, H02J0013000000, F24F0013300000
(31) Priority Document No	:NA
(32) Priority Date	:NA
(33) Name of priority country	:NA
(86) International Application No	:PCT//
Filing Date	:01/01/1900
(87) International Publication No	: NA
(61) Patent of Addition to Application Number	:NA
Filing Date	:NA
(62) Divisional to Application Number	:NA
Filing Date	:NA

(71)**Name of Applicant :**
1)Dr. V. Muneeswaran
Address of Applicant :Assistant Professor, Department of Electronics and Communication Engineering Kalasalingam Academy of Research And Education, Anand Nagar, Krishnankoil-626126, Tamil Nadu, India Tamil Nadu India
2)Dr. Kalpana Murugan
3)Mr. S.Godwin
4)Mr. P.Gokul
5)Mr. T .Gokul
6)Mr. M. Jegatheswaran
(72)**Name of Inventor :**
1)Dr. V. Muneeswaran
2)Dr. Kalpana Murugan
3)Mr. S.Godwin
4)Mr. P.Gokul
5)Mr. T .Gokul
6)Mr. M. Jegatheswaran

(57) Abstract :
The energy conservation and energy reduction based upon the efficient utilization and accommodation of resources that are available provides the solution to the energy consumption . As we all know that the energy is divided into two types namely renewable and non-renewable energy resources as well. In which the renewable energy resources are which the present abundant in nature and can be used again and again when compared to the non-renewable energy resources as well. So the respective individual needs to take care about the energy saving modes and also the future generation to utilize it and leave it for the next and after. In this work an intelligent framework for effective control of street lighting system which is based on the concept of Availability on demand • is anticipated. The proposed system provides an competent scheme for energy conservation in public lighting system.

No. of Pages : 6 No. of Claims : 5

(12) PATENT APPLICATION PUBLICATION
(21) Application No.202141024918 A
(19) INDIA
(22) Date of filing of Application :04/06/2021
(43) Publication Date : 11/06/2021

(54) Title of the invention : Two Ways Water Faucet

(51) International classification	:E03C0001040000, E03C0001050000, E03C0001080000, F16K0011078000, A47J0031057000	(71)**Name of Applicant :** **1)Sujana Doniparthi** Address of Applicant :2f, D Block, Vaikund Govardhan Apartments,Old ECR link Road, Shollinganallur,Chennai Tamil Nadu India
(31) Priority Document No	:NA	(72)**Name of Inventor :**
(32) Priority Date	:NA	**1)Sujana Doniparthi**
(33) Name of priority country	:NA	
(86) International Application No	:PCT//	
Filing Date	:01/01/1900	
(87) International Publication No	: NA	
(61) Patent of Addition to Application Number	:NA	
Filing Date	:NA	
(62) Divisional to Application Number	:NA	
Filing Date	:NA	

(57) Abstract :
This invention is related to a water faucet that delivers water in two directions(one above and one below) from the tip of the spout. The water faucet includes a spout with a partition, dividing it into two channels. A valve is positioned at the beginning of the partition and is configured to be operated through a lever. Operation of the lever either downwards or upwards, causes the valve to operate resulting in delivery of the water through the water delivery outlet present below or above the tip of the spout.

No. of Pages : 17 No. of Claims : 3

(12) PATENT APPLICATION PUBLICATION
(21) Application No.202141024950 A
(19) INDIA
(22) Date of filing of Application :04/06/2021
(43) Publication Date : 11/06/2021

(54) Title of the invention : ADVANCE FACE MASK FOR COVID-19 PROTECTION USING ARTIFICIAL INTELLIGENCE WITH INTEGRATED QUALITY AND PROXIMITY DETECTION

(51) International classification	:H04W0004020000, A61L0027540000, A61K0008730000, A61M0016060000, G10L0021021600
(31) Priority Document No	:NA
(32) Priority Date	:NA
(33) Name of priority country	:NA
(86) International Application No	:PCT//
Filing Date	:01/01/1900
(87) International Publication No	: NA
(61) Patent of Addition to Application Number	:NA
Filing Date	:NA
(62) Divisional to Application Number	:NA
Filing Date	:NA

(71)**Name of Applicant :**
1)Dr. Jitendranath Mungara
Address of Applicant :Principal & Professor, Department of Computer Science and Engineering, Nagarjuna College of Engineering & Technology, Bangalore, Karnataka, India Karnataka India
2)Dr. Muthukumar S
3)Dr. Manoj Sharma
4)Dr. Pooja Singh
5)Dr Nandhagopal S Munusamy
6)Dr. Ram Shringar Raw
7)Mr. Gaurav Tripathi
8)J. Santhakumar
9)Dr.Ambica Prakash Mani
10)Aradhna Saini
11)Gaurav Dhuriya
12)Nirdhum Narayan
(72)**Name of Inventor :**
1)Dr. Jitendranath Mungara
2)Dr. Muthukumar S
3)Dr. Manoj Sharma
4)Dr. Pooja Singh
5)Dr Nandhagopal S Munusamy
6)Dr. Ram Shringar Raw
7)Mr. Gaurav Tripathi
8)J. Santhakumar
9)Dr.Ambica Prakash Mani
10)Aradhna Saini
11)Gaurav Dhuriya
12)Nirdhum Narayan

(57) Abstract :
The present invention relates to advance face mask for covid-19 protection using artificial intelligence with integrated quality and proximity detection. The objective of the present invention is to solve the problems in the prior art technologies related to face mask design for protection of viral infection.

No. of Pages : 28 No. of Claims : 5

(12) PATENT APPLICATION PUBLICATION
(21) Application No.202141025016 A
(19) INDIA
(22) Date of filing of Application :04/06/2021
(43) Publication Date : 11/06/2021

(54) Title of the invention : AYURVEDIC HERBAL FORMULATION FOR INFERTILITY

(51) International classification	:A61K0036880000, A61K0036480000, A61K0009200000, A61K0036486000, A61K0036185000
(31) Priority Document No	:NA
(32) Priority Date	:NA
(33) Name of priority country	:NA
(86) International Application No	:PCT//
Filing Date	:01/01/1900
(87) International Publication No	: NA
(61) Patent of Addition to Application Number	:NA
Filing Date	:NA
(62) Divisional to Application Number	:NA
Filing Date	:NA

(71)**Name of Applicant :**
1)Dr. VIJAYABHASKAR KANAKAM
Address of Applicant :Associate Professor, St. Peters Institute of Pharmaceutical Science, Vidyanagar, Hanamkonda, Warangal urban, Telangana, Pincode: 506002 Telangana India
2)Ms. SREEPADA NAVYASRI
3)Mr. BANDI NIKHIL
4)Mr. BODIGE PAVANKALYAN
5)Mr. PINGALI SRINIVASA RAO
6)Mr. KANJARLA NARASIMHA
(72)**Name of Inventor :**
1)Dr. VIJAYABHASKAR KANAKAM
2)Ms. SREEPADA NAVYASRI
3)Mr. BANDI NIKHIL
4)Mr. BODIGE PAVANKALYAN
5)Mr. PINGALI SRINIVASA RAO
6)Mr. KANJARLA NARASIMHA

(57) Abstract :
The present invention relates to preparation of herbal tablets by using hydro alcoholic extract of different plant and seeds such as mucuna pruriens, leaf extract of Desmodium latifolium, shilajith, seed of Putranjiva Roxburghii, Curculigo orchids ryzome To this adding excipients. Tablets were compressed by using direct compression technique.

No. of Pages : 10 No. of Claims : 3

(12) PATENT APPLICATION PUBLICATION
(21) Application No.202141025017 A
(19) INDIA
(22) Date of filing of Application :04/06/2021
(43) Publication Date : 11/06/2021

(54) Title of the invention : HERBAL GEL FOR TREATMENT OF ACNE

(51) International classification	:A61K0036470000, A61Q0019000000, A61K0036580000, A61K0009000000, A61K0008970000
(31) Priority Document No	:NA
(32) Priority Date	:NA
(33) Name of priority country	:NA
(86) International Application No	:PCT//
Filing Date	:01/01/1900
(87) International Publication No	: NA
(61) Patent of Addition to Application Number	:NA
Filing Date	:NA
(62) Divisional to Application Number	:NA
Filing Date	:NA

(71)**Name of Applicant :**
1)Dr. K. Kranthi Kumar
Address of Applicant :HOD Department of Pharmaceutics, Mahathi College of Pharmacy, Angalu - CTM Rd, Madanapalle, Andhra Pradesh, Pincode: 517319 Andhra Pradesh India
2)Mr. Moturi Mahesh
3)Mr. Shaik Naseeb Basha
4)Dr. Zakir Hussain Shaik Mohammad
(72)**Name of Inventor :**
1)Dr. K. Kranthi Kumar
2)Mr. Moturi Mahesh
3)Mr. Shaik Naseeb Basha
4)Dr. Zakir Hussain Shaik Mohammad

(57) Abstract :
The present invention relates to the preparation of herbal gel to treat acne using potent antimicrobial plants extracts such as aerial parts of Acalypha indica extract, leaves of Azadirachta indica extract, leaves and twigs of Camellia sinensis extract, Thymus vulgaris oil, Thuja orientalis oil. The skin irritation studies show that anti-acne gel formulations dose not produces any severe irritation, redness of skin.

No. of Pages : 14 No. of Claims : 3

(12) PATENT APPLICATION PUBLICATION
(19) INDIA
(22) Date of filing of Application :05/06/2021

(21) Application No.202141025042 A
(43) Publication Date : 11/06/2021

(54) Title of the invention : Phyllanthus Niruri Extract Composition for Jaundice and Its Preparation Method Thereof

(51) International classification	:A61K0036470000, A61K0008970000, A61N0005060000, A23L0033190000, A61K0031198000
(31) Priority Document No	:NA
(32) Priority Date	:NA
(33) Name of priority country	:NA
(86) International Application No	:PCT//
Filing Date	:01/01/1900
(87) International Publication No	: NA
(61) Patent of Addition to Application Number	:NA
Filing Date	:NA
(62) Divisional to Application Number	:NA
Filing Date	:NA

(71)**Name of Applicant :**
1)Dr.Aruna Kumari Nakkella
Address of Applicant :Assistant Principal, Dr.BR Ambedkar University, Srikakulam, D.No:20-14-13, Ramachandra Rao Peta, Near SBI, Kambal Tank Branch, Rajamahendravaram, East Godavari-533103, Andhra Pradesh, India Andhra Pradesh India
2)Dr.Nikhil Krishna Sairam Vannemreddy
3)Dr.P.Sri Rama Murthy
4)Dr.Surapaneni Krishna Mohan
5)Dr.C.Ananda Vayaravel
6)Sofia Khanam
7)Dr.Pooja Choubey
8)Dr.Kalai Selvi Rajendiran
9)Dr.Santosh Karajgi
10)Prof.K.Basavaiah
11)Dr.Dharmasoth.Rama Devi
12)Dr.M.Monisha
13)Dr.M.Neela
14)Dr.S.Srilalitha

(72)**Name of Inventor :**
1)Dr.Aruna Kumari Nakkella
2)Dr.Nikhil Krishna Sairam Vannemreddy
3)Dr.P.Sri Rama Murthy
4)Dr.Surapaneni Krishna Mohan
5)Dr.C.Ananda Vayaravel
6)Sofia Khanam
7)Dr.Pooja Choubey
8)Dr.Kalai Selvi Rajendiran
9)Dr.Santosh Karajgi
10)Prof.K.Basavaiah
11)Dr.Dharmasoth.Rama Devi
12)Dr.M.Monisha
13)Dr.M.Neela
14)Dr.S.Srilalitha

(57) Abstract :
ABSTRACT: Title: Phyllanthus Niruri Extract Composition for Jaundice and Its Preparation Method Thereof The present disclosure proposes Phyllanthus niruri extract composition for jaundice and its preparation method thereof. The proposed composition is provided in a powdered and edible form that is to be mixed with either milk or buttermilk for daily intake for jaundice. The Phyllanthus niruri extract decreases the bilirubin level and oxidative stress in phenylhydrazine-induced neonatal jaundice. The composition of Phyllanthus niruri reduces the use of synthetic drugs. The composition of Phyllanthus niruri is a cost-effective composition to cure jaundice with no harmful side effects for normal cells.

No. of Pages : 11 No. of Claims : 4

(12) PATENT APPLICATION PUBLICATION
(21) Application No.202141025043 A
(19) INDIA
(22) Date of filing of Application :05/06/2021
(43) Publication Date : 11/06/2021

(54) Title of the invention : Innocuous Mosquito Repellent and Method of Making the Same

(51) International classification	:A01M0029120000, A01N0065000000, A01M0013000000, A61Q0017020000, A01M0001200000	(71)**Name of Applicant :** **1)Jonna Jagadesh Kiran Kumar** Address of Applicant :37-10-111/A/2, Nggo™s Colony, Murali Nagar, Near Masjid, Visakhapatnam-, 530007, Andhra Pradesh, India. Andhra Pradesh India
(31) Priority Document No	:NA	(72)**Name of Inventor :**
(32) Priority Date	:NA	**1)Jonna Jagadesh Kiran Kumar**
(33) Name of priority country	:NA	
(86) International Application No	:PCT//	
Filing Date	:01/01/1900	
(87) International Publication No	: NA	
(61) Patent of Addition to Application Number	:NA	
Filing Date	:NA	
(62) Divisional to Application Number	:NA	
Filing Date	:NA	

(57) Abstract :
ABSTRACT: Title: Innocuous Mosquito Repellent and Method of Making the Same The present disclosure proposes an innocuous mosquito repellent that comprises 250 ml of water and one to two drops of acetone. The innocuous mosquito repellent causes no harm to users when the user inhales the vapours of the mosquito repellent. The proposed mosquito repellent is of low cost and easily accessible for everyone. The proposed mosquito repellent is effective against mosquitoes and causes them to lose their wings. The proposed mosquito repellent makes the mosquitoes fall on the ground within minutes when kept in the vaporizer. The proposed mosquito repellent is a low-cost mosquito repellent with minimal ingredients.

No. of Pages : 10 No. of Claims : 4

(12) PATENT APPLICATION PUBLICATION
(21) Application No.202141025072 A
(19) INDIA
(22) Date of filing of Application :05/06/2021
(43) Publication Date : 11/06/2021

(54) Title of the invention : Building Confidential and Efficient Query Services in the Cloud with RASP Data Perturbation

(51) International classification :G06F0016270000, H04L0029080000, A61B0017160000, G06F0016330000, G06F0016242000
(31) Priority Document No :NA
(32) Priority Date :NA
(33) Name of priority country :NA
(86) International Application No :PCT//
Filing Date :01/01/1900
(87) International Publication No : NA
(61) Patent of Addition to Application Number:NA
Filing Date :NA
(62) Divisional to Application Number :NA
Filing Date :NA

(71)**Name of Applicant :**
1)A.Chandra Mouli, Associate Professor/ Department of CSE, Potti Sriramulu Chalavadi Mallikarjuna Rao College of Engineering and Technology
Address of Applicant :Potti Sriramulu Chalavadi Mallikarjuna Rao College of Engineering and Technology. Kotahapeta,Vijayawada, A.P-520001. Andhra Pradesh India
2)Er. Sandeep Ravikanti, Assistant Professor / Department of CSE, Methodist College of Engineering & Technology.
3)Unnati Khanapurkar, Assistant Professor / Department of CSE, Methodist College of Engineering & Technology.
4)B. Sowjanya, Assistant Professor / Department of CSE, Methodist College of Engineering & Technology.
5)Khutaija Abid, Assistant Professor / Department of IT, Lords Institute of Engineering & Technology
6)Kaneez Fatima, Assistant Professor / Department of IT, Lords Institute of Engineering & Technology
(72)**Name of Inventor :**
1)A.Chandra Mouli, Associate Professor/ Department of CSE, Potti Sriramulu Chalavadi Mallikarjuna Rao College of Engineering and Technology
2)Er. Sandeep Ravikanti, Assistant Professor / Department of CSE, Methodist College of Engineering & Technology.
3)Unnati Khanapurkar, Assistant Professor / Department of CSE, Methodist College of Engineering & Technology.
4)B. Sowjanya, Assistant Professor / Department of CSE, Methodist College of Engineering & Technology.
5)Khutaija Abid, Assistant Professor / Department of IT, Lords Institute of Engineering & Technology
6)Kaneez Fatima, Assistant Professor / Department of IT, Lords Institute of Engineering & Technology

(57) Abstract :
Abstract With the improvement of administrations figuring and distributed computing, it has turned out to be conceivable to outsource extensive databases to database specialist co-ops and let the suppliers keep up the range-inquiry benefit. Nonetheless, a few information may be touchy that the information proprietor does not have any desire to move to the cloud unless the information classification and inquiry security are ensured. We propose the Random Space Encryption (RASP) approach that permits productive range look with more grounded assault versatility than existing proficiency centered methodologies. The arbitrary space irritation (RASP) information annoyance technique to give secure and proficient range question and kNN inquiry administrations for ensured information in the cloud. The RASP information annoyance strategy consolidates arranges protecting encryption, dimensionality development, arbitrary com motion infusion, and irregular projection, to give solid flexibility to assaults on the irritated information and questions. It likewise saves multidimensional reaches, which enables existing ordering systems to be connected to speedup extend question handling. The kNN-R calculation is intended to work with the RASP go inquiry calculation to process the kNN inquiries.

No. of Pages : 15 No. of Claims : 5

(12) PATENT APPLICATION PUBLICATION
(19) INDIA
(22) Date of filing of Application :06/06/2021

(21) Application No.202141025101 A
(43) Publication Date : 11/06/2021

(54) Title of the invention : SMART COMB WITH MASSAGING STROKES TO IMPROVE HAIR GROWTH

(51) International classification	:A61H0007000000, A61K0008920000, A61Q0005000000, A45D0024220000, A61Q0007000000
(31) Priority Document No	:NA
(32) Priority Date	:NA
(33) Name of priority country	:NA
(86) International Application No	:PCT//
Filing Date	:01/01/1900
(87) International Publication No	: NA
(61) Patent of Addition to Application Number	:NA
Filing Date	:NA
(62) Divisional to Application Number	:NA
Filing Date	:NA

(71)**Name of Applicant :**
1)Dr.R.SRIDEVI
Address of Applicant :PROFESSOR, DEPT. OF COMPUTER SCIENCE AND ENGINEERING, K.RAMAKRISHNAN COLLEGE OF ENGINEERING, SAMAYAPURAM, TRICHY - PIN 621 112 Tamil Nadu India
2)Dr. PRATHIBA. L
3)Dr. VINAY KUMAR NASSA
4)TEJAL JANARDAN MAHAJAN
5)Dr.ISHA SUWALKA
6)Dr. SHUBHAJIT HALDER
7)ANUSHA LINDA KOSTKA J E
8)Dr. ANUPAM JAIN
9)Mr.MOHIT
10)Dr. PRATIK GITE

(72)**Name of Inventor :**
1)Dr.R.SRIDEVI
2)Dr. PRATHIBA. L
3)Dr. VINAY KUMAR NASSA
4)TEJAL JANARDAN MAHAJAN
5)Dr.ISHA SUWALKA
6)Dr. SHUBHAJIT HALDER
7)ANUSHA LINDA KOSTKA J E
8)Dr. ANUPAM JAIN
9)Mr.MOHIT
10)Dr. PRATIK GITE

(57) Abstract :
Smart comb with massaging strokes to improve hair growth. Is used to estimate the rate of hair fall and increase the intensity of massaging along with various strokes of massaging accordingly to stock or reduce hair falls substantially. The proposed smart comb works on the technique of artificial intelligence. The smart comb comprises two components, one for filling up or hair oil or hair serum for the purpose of massage, and the second component is the artificial intelligence technique to recognize the volume and condition of the scalp. The smart comb is IOT enabled since it can be controlled using the smartphone or any electronic gadgets of the user.

No. of Pages : 22 No. of Claims : 4

(12) PATENT APPLICATION PUBLICATION
(21) Application No.202141025106 A
(19) INDIA
(22) Date of filing of Application :06/06/2021
(43) Publication Date : 11/06/2021

(54) Title of the invention : IN-LINE FUEL FILTER OUTER CASING DISSAMBLY AND REMANUFACTURING

(51) International classification	:B01D0036000000, F02M0037220000, B01D0035300000, B01D0029960000, H04R0001020000
(31) Priority Document No	:NA
(32) Priority Date	:NA
(33) Name of priority country	:NA
(86) International Application No	:PCT//
Filing Date	:01/01/1900
(87) International Publication No	: NA
(61) Patent of Addition to Application Number	:NA
Filing Date	:NA
(62) Divisional to Application Number	:NA
Filing Date	:NA

(71)**Name of Applicant :**
1)AZEEM HAFIZ P A
Address of Applicant :Associate Professor, Department of Mechanical Engineering, Musaliar College of Engineering, Chirayinkeezhu, Thiruvananthapuram, Kerala 695304 Kerala India
2)AKASH R KRISHNAN
3)SARFAZ MUHAMMED B
4)ARSHED A
5)ASWIN SUDHEER
6)MOHAMMED ASADULLAH THAKUR
(72)**Name of Inventor :**
1)AZEEM HAFIZ P A
2)AKASH R KRISHNAN
3)SARFAZ MUHAMMED B
4)ARSHED A
5)ASWIN SUDHEER
6)MOHAMMED ASADULLAH THAKUR

(57) Abstract :
IN-LINE FUEL FILTER OUTER CASING DISASSEMBLY AND REMANUFACTURING ABSTRACT Embodiments of the present disclosure are related to end-of-life vehicles for disassembly and remanufacturing of in-line fuel filter that includes a filter cap, bottom casing and a removable filter element. End-of-life vehicles (ELVs) directive targets to minimize the waste generated from vehicles when they are disposed, by reusing and recycling for sustainability, economic liability and adoption of eco-friendly technologies. Design for remanufacture plays an important role in enhancing the performance of product. Disassembly too, is vital for the separation of the reusable and non-reusable components. A non-reusable in-line fuel filter component is configured and remanufactured as a reusable component. The automobile component provides a have high reusability rate as it includes a threaded bottle cap design in the filter casing instead of fully enclosed casing. Thus, helps in advanced but simple maintenance policy by simply cleaning or replacing the inner filter element.

No. of Pages : 17 No. of Claims : 7

(12) PATENT APPLICATION PUBLICATION
(21) Application No.202141025111 A
(19) INDIA
(22) Date of filing of Application :06/06/2021
(43) Publication Date : 11/06/2021

(54) Title of the invention : A VEHICLE TIRE CONTROL SYSTEM AT CURVED ROADS USING INTELLIGENT INTERFACES AND SUPPORT VECTOR MACHINES

(51) International classification	:B60T0008172000, B60C0023000000, G05B0019418000, G06N0003120000, G06K0009620000
(31) Priority Document No	:NA
(32) Priority Date	:NA
(33) Name of priority country	:NA
(86) International Application No	:PCT//
Filing Date	:01/01/1900
(87) International Publication No	: NA
(61) Patent of Addition to Application Number	:NA
Filing Date	:NA
(62) Divisional to Application Number	:NA
Filing Date	:NA

(71)**Name of Applicant :**
1)Dr.V.Sujatha
Address of Applicant :Associate Professor, Department of Computer Science and Engineering, Vignan Nirula Institute of Technology and Science for Womens, Pedapalakaluru, Guntur, Andhra Pradesh, India. Pin Code:522005 Andhra Pradesh India
2)Dr.Raghavendra N
3)Mr.C S Pavan Kumar
4)Dr.Rabinarayan Satpathy
5)Dr.Sushma Jaiswal
6)Dr.S.Selvakanmani
7)Mr.Soubraylu Sivakumar
8)Mr.Chintala Venkatesh
9)Dr.A.Geetha
10)Mr.Tarun Jaiswal
(72)**Name of Inventor :**
1)Dr.V.Sujatha
2)Dr.Raghavendra N
3)Mr.C S Pavan Kumar
4)Dr.Rabinarayan Satpathy
5)Dr.Sushma Jaiswal
6)Dr.S.Selvakanmani
7)Mr.Soubraylu Sivakumar
8)Mr.Chintala Venkatesh
9)Dr.A.Geetha
10)Mr.Tarun Jaiswal

(57) Abstract :
ABSTRACT A VEHICLE TIRE CONTROL SYSTEM AT CURVED ROADS USING INTELLIGENT INTERFACES AND SUPPORT VECTOR MACHINES [034] The present invention discloses a vehicle tire control system at curved roads using intelligent interfaces and support vector machines. The method and system includes, but not limited to, a plurality of sensors to sense the road vicinity and irregular bands of the driving path; a processing unit to receive its input from the sensors and guide the steering mechanism to control the tire direction of the vehicle; a support vector machine implemented to calculate the predefined functions for helping the processing unit in guiding the steering mechanism; and an interactive database unit for acquiring and storing, road curve sensed data with respect to the acceleration of one specified point of the tire.

No. of Pages : 23 No. of Claims : 9

(12) PATENT APPLICATION PUBLICATION
(21) Application No.202141025148 A
(19) INDIA
(22) Date of filing of Application :07/06/2021
(43) Publication Date : 11/06/2021

(54) Title of the invention : IOT BASED SMART LIGHTING SYSTEM FOR FIVE DIFFERENT STUDIO TYPED SMART HOUSES

(51) International classification	:H04L0029080000, G06Q0050160000, H05B0047190000, G06Q0050060000, E06B0009020000
(31) Priority Document No	:NA
(32) Priority Date	:NA
(33) Name of priority country	:NA
(86) International Application No	:PCT//
Filing Date	:01/01/1900
(87) International Publication No	: NA
(61) Patent of Addition to Application Number	:NA
Filing Date	:NA
(62) Divisional to Application Number	:NA
Filing Date	:NA

(71)**Name of Applicant :**
1)Dr. M. NAGABUSHANAM
Address of Applicant :ASSISTANT PROFESSOR DEPARTMENT OF ELECTRONICS & COMMUNICATION ENGINEERING M.S. RAMAIAH INSTITUTE OF TECHNOLOGY MSRIT POST, M S RAMAIAH NAGAR, MATHIKERE, BENGALURU, KARNATAKA 560054 Karnataka India
2)Mrs. ARUDRA ANNEPU
3)Dr. KUMARASWAMY S
4)Dr. DEVANANDA S N
5)Mrs. SWATHI PAI M
6)Dr. SARAVANAKUMAR GURUSAMY
7)Mr.NAVEENA PAI G
8)Mr.KAPIL KUSHWAHA
(72)**Name of Inventor :**
1)Dr. M. NAGABUSHANAM
2)Mrs. ARUDRA ANNEPU
3)Dr. KUMARASWAMY S
4)Dr. DEVANANDA S N
5)Mrs. SWATHI PAI M
6)Dr. SARAVANAKUMAR GURUSAMY
7)Mr.NAVEENA PAI G
8)Mr.KAPIL KUSHWAHA

(57) Abstract :
ABSTRACT IOT BASED SMART LIGHTING SYSTEM FOR FIVE DIFFERENT STUDIO TYPED SMART HOUSES There is an up-surging attention in the development of Internet of Things (IoT) aided smart houses and commercial buildings from the past years. Despite, the expansion of these smart buildings is obstructed by the proclaimed cost in installation and production also it have struggle in evaluating under large-scale in the field. This present invention, is therefore designed and organization of an emergency smart light- IoT based implementation in the smart houses and commercial complexes. The vital benefit of this smart light structure is that it is assembled on the top of the prevailing amenities present in the houses and commercial buildings. As a novel attempt, we projected and organized our developed IoT system in five different smart houses with multi-layered complexes. Exhausting the real framed data from different types of buildings, we in the present invention proposed a novel system which can deliver >95% packet delivery rate in average. Moreover, the evaluation assays also delivered toughness and constant stability system to diverse environmental fluxes. Thus the present invention delivers a practical visions to enable the application of IoT based smart houses and commercial building development.

No. of Pages : 17 No. of Claims : 9

(12) PATENT APPLICATION PUBLICATION
(21) Application No.202141025216 A
(19) INDIA
(22) Date of filing of Application :07/06/2021
(43) Publication Date : 11/06/2021

(54) Title of the invention : NOVEL POLYTETRAMERS AND AQUEOUS DISPERSIONS CONTAINING THEM

(51) International classification	:A01N0025300000, C08G0018120000, D06P0001000000, C09D0005020000, C08G0018080000
(31) Priority Document No	:NA
(32) Priority Date	:NA
(33) Name of priority country	:NA
(86) International Application No	:PCT//
Filing Date	:01/01/1900
(87) International Publication No	: NA
(61) Patent of Addition to Application Number	:NA
Filing Date	:NA
(62) Divisional to Application Number	:NA
Filing Date	:NA

(71)**Name of Applicant :**
1)SAHAANA HYDRO BIOTECH & ORGANIC PVT. LTD.,
Address of Applicant :Plot No.6, BSR Akruthi Greenwood Layout, Konasandra, Jigani, Bangalore, India, 560105 Karnataka India
(72)**Name of Inventor :**
1)Rajkumar Ganugula
2)Shruthi M Shenava
3)J V Shanmukha Kumar

(57) Abstract :
The invention relates to compositions of novel polytetramers and their use in dispersing active ingredients such as fluorescent dyes for coating applications such as colouring of textile fabrics. The invention also discloses the synthesis of the polytetramers and preparation of aqueous dispersions of active ingredients containing the polytetramers.

No. of Pages : 26 No. of Claims : 6

(12) PATENT APPLICATION PUBLICATION
(19) INDIA
(22) Date of filing of Application :07/06/2021
(21) Application No.202141025244 A
(43) Publication Date : 11/06/2021

(54) Title of the invention : FULL SPECTRUM TURMERIC EXTRACT BY FERMENTATION PROCESS

(51) International classification	:A61K0036906600, A23L0033105000, A61K0031120000, A23L0005200000, A23L0005000000
(31) Priority Document No	:NA
(32) Priority Date	:NA
(33) Name of priority country	:NA
(86) International Application No	:PCT// /
Filing Date	:01/01/1900
(87) International Publication No	: NA
(61) Patent of Addition to Application Number	:NA
Filing Date	:NA
(62) Divisional to Application Number	:NA
Filing Date	:NA

(71)**Name of Applicant :**
1)Jinu John
Address of Applicant :Assistant Professor Department of Biotechnology CMS College Kottayam Kerala Kerala India
(72)**Name of Inventor :**
1)Jinu John

(57) Abstract :
This invention discloses an economical and eco-friendly method for the manufacturing of full spectrum turmeric extract by fermentation process from fresh rhizome. Full spectrum turmeric extract contains most of the phytochemicals present in the natural plant and have better bioactivity by synergistic effect of curcuminoids and other phytonutrients. The present innovation can improve the taste, odor, solubility and bioavailability of phytochemicals in the extract, which enhances its therapeutic potential. This method further comprises blending of the turmeric essential oil with the final extract powder, thereby modulation of organoleptic properties for various applications such as dietary supplement, cosmetic and related industries. It provides a full spectrum turmeric extract with better bioactivity and free from toxic organic solvents.

No. of Pages : 11 No. of Claims : 5

(12) PATENT APPLICATION PUBLICATION
(21) Application No.202141025316 A
(19) INDIA
(22) Date of filing of Application :07/06/2021
(43) Publication Date : 11/06/2021

(54) Title of the invention : FIBER TO SUGAR FREE JELLY FROM BY-PRODUCT OF BEETROOT

(51) International classification	:A23L0021100000, A01C0021000000, A23L0021250000, H01M0010420000, A61K0031167000
(31) Priority Document No	:NA
(32) Priority Date	:NA
(33) Name of priority country	:NA
(86) International Application No	:PCT//
Filing Date	:01/01/1900
(87) International Publication No	: NA
(61) Patent of Addition to Application Number	:NA
Filing Date	:NA
(62) Divisional to Application Number	:NA
Filing Date	:NA

(71)**Name of Applicant :**
1)B VISHNUPRIYA
Address of Applicant :B VISHNUPRIYA, Assistant Professor,PG and Reasearch Department of Biotechnology,Kongunadu Arts and Science College, Coimbatore, Tamilnadu. Tamil Nadu India
2)V.AGALYA
(72)**Name of Inventor :**
1)B VISHNUPRIYA
2)V.AGALYA

(57) Abstract :
A Fiber to sugar free jelly consists of a 20g of beetroot peel powder from 400g beetroot; and 50ml of distilled water. The jelly is consisting of a set of ingredients.The ingredients are agar-agar(1g),Honey (required amount),beetroot peel extract (5ml to 5ml), palm Jaggery (4-5g) ,water 30ml to 40ml,castor oil(1/2 tea spoon.

No. of Pages : 21 No. of Claims : 6

(12) PATENT APPLICATION PUBLICATION
(21) Application No.202143022279 A
(19) INDIA
(22) Date of filing of Application :18/05/2021
(43) Publication Date : 11/06/2021

(54) Title of the invention : FUEL TANK CAP ASSEMBLY

(51) International classification	:B60K0015040000, F02M0037000000, B60K0015050000, B60K0015030000, H01R0013627000	(71)**Name of Applicant :** **1)Sandhar Automotives Bommasandra** Address of Applicant :Plot No.8, Bommasandra- Jigani link Road KIADB Industrial Area, Taluk- Anekal, Bengaluru, Karnataka 562106 Karnataka India
(31) Priority Document No	:NA	(72)**Name of Inventor :**
(32) Priority Date	:NA	**1)SETH, Akshansh**
(33) Name of priority country	:NA	**2)DESWAL, Pardeep**
(86) International Application No	:NA	**3)NAIK, Dillip Kumar**
Filing Date	:NA	
(87) International Publication No	: NA	
(61) Patent of Addition to Application Number	:	
Filed on	:01/01/1900	
(62) Divisional to Application Number	:NA	
Filing Date	:NA	

(57) Abstract :
ABSTRACT TITLE OF THE INVENTION: FUEL TANK CAP ASSEMBLY A fuel tank cap assembly (200) is disclosed. The assembly (200) includes a cap unit (207), a main body (205) coupled to the cap unit (207) and a latch assembly (227) coupled to the main body (205) and the cap unit (207) via a pin (205d). The latch assembly (227) including a latch lever (227a) and a resilient means (227c). The latch lever (227a) including a first end (b1) and a second end (b2). The latch lever (227a) is operatively coupled to a latch cable for opening/closing the cap unit (207). The latch cable is coupled to the second end (b2) while the resilient means (227c) and the pin (205d) are coupled to the first end (b1) of the latch lever (227a). The pin (205d) /the resilient means (227c) is disposed at a pre-defined distance from an axis along which the latch cable is pulled. The pre-defined distance produces a leverage thereby reducing force for operating the fuel tank cap assembly (200). FIG. 6a

No. of Pages : 33 No. of Claims : 9

(12) PATENT APPLICATION PUBLICATION
(21) Application No.202147023785 A
(19) INDIA
(22) Date of filing of Application :28/05/2021
(43) Publication Date : 11/06/2021

(54) Title of the invention : A GROWTH MEDIA COMPOSITION AND IMPROVED METHODS OF PRODUCING BIOMASS AND VALUE ADDED PRODUCT

(51) International classification	:C12N0001120000, C12P0007060000, C12P0007640000, G06F0016280000, C12N0001200000
(31) Priority Document No	:201841042227
(32) Priority Date	:09/11/2018
(33) Name of priority country	:India
(86) International Application No	:PCT/IB2019/059664
Filing Date	:11/11/2019
(87) International Publication No	:WO 2020/095281
(61) Patent of Addition to Application Number	:NA
Filing Date	:NA
(62) Divisional to Application Number	:NA
Filing Date	:NA

(71)**Name of Applicant :**
1)STRING BIO PRIVATE LIMITED
Address of Applicant :Bangalore Bioinnovation Centre, Biotech Park, Electronics City Phase 1 Bangalore, Karnataka 560100 Karnataka India
(72)**Name of Inventor :**
1)PALABHANVI, Basavaraj
2)C, Sandeep Kumar
3)SUBRAMANIAN, Hamsini
4)S, Naga Sairam
5)SHINGALA, Purvesh
6)SUBBIAN, Ezhil

(57) Abstract :
The present disclosure relates to growth media composition. The disclosure further relates to a method of producing the biomass at higher concentration by employing a growth media composition. The disclosure further relates to a method of producing value added product employing growth media composition. The growth media composition of the present disclosure is homogenous in nature and is self-sterilized. The present disclosure provides for enhanced productivity of the biomass and the value added products, respectively employing gaseous substrate.

No. of Pages : 33 No. of Claims : 26

(12) PATENT APPLICATION PUBLICATION
(21) Application No.202031023859 A
(19) INDIA
(22) Date of filing of Application :07/06/2020
(43) Publication Date : 11/06/2021

(54) Title of the invention : BACTERIAL AND VIRAL INFECTION LOCALIZATION AND CLASSIFICATION USING X-RAY AND CT IMAGES

(51) International classification	:A61B0006000000, G01N0033569000, H04L0012741000, C12Q0001689000, C07K0014220000	(71)**Name of Applicant :** **1)Arvind Choubey** Address of Applicant :Director IIIT Bhagalpur BCE Campus Sabour, Bhagalpur Bihar India **2)Sandeep Raj**
(31) Priority Document No	:NA	(72)**Name of Inventor :**
(32) Priority Date	:NA	**1)Sandeep Raj**
(33) Name of priority country	:NA	**2)Arvind Choubey**
(86) International Application No	:NA	
Filing Date	:NA	
(87) International Publication No	: NA	
(61) Patent of Addition to Application Number	:NA	
Filing Date	:NA	
(62) Divisional to Application Number	:NA	
Filing Date	:NA	

(57) Abstract :
This invention relates to a method and a decision support system capable of localizing and classifying the bacterial & viral infections using chest X-rays/CT scan systems. The proposed method pre-processes the input images to highlight the findings, rescale the images and gamma correction. The pre-processed input chest X-ray/CT scan images are used to extract the lungs. The extracted lungs alongwith the radiological findings are used to train the software to classify into normal and abnormal categories using machine learning/deep learning mechanism. The information gathered is transferred through the transfer learning approach for classification of chest abnormalities into bacterial and viral infections. The output is generated in form of report (both in .pdf copy and messages of mobile phones) and can be used for screening targeted for mass.

No. of Pages : 14 No. of Claims : 9

(12) PATENT APPLICATION PUBLICATION
(19) INDIA
(22) Date of filing of Application :03/05/2021
(21) Application No.202131020165 A
(43) Publication Date : 11/06/2021

(54) Title of the invention : ARTIFICIAL INTELLIGENCE BASED OUTDOOR NAVIGATION SYSTEM USING AUGMENTED REALITY

(51) International classification	:G01C0021340000, G06T0019000000, G06F0016290000, D01H0007600000, G01C0021200000
(31) Priority Document No	:NA
(32) Priority Date	:NA
(33) Name of priority country	:NA
(86) International Application No	:NA
Filing Date	:NA
(87) International Publication No	: NA
(61) Patent of Addition to Application Number	:NA
Filing Date	:NA
(62) Divisional to Application Number	:NA
Filing Date	:NA

(71)**Name of Applicant :**
1)Pratyusa Mukherjee
Address of Applicant :School of Computer Engineering, Kalinga Institute of Industrial Technology (KIIT), Deemed to be University, Bhubaneshwar, Odisha, India. Pin - 751024 Orissa India
2)Ms. Neha Kapila
3)Mr. Dhiraj Kapila
4)Dr. Ashulekha Gupta
5)Dr.Purnendu Shekhar Pandey
6)Dr. Hardeep Singh Saini
7)Dr. Sudip Mandal
8)Mr. Pijush Dutta
9)Dr. Chittaranjan Pradhan
10)Abhishek Bhattacharya
11)C.R.Srinivasan
12)Dr.S.Balamurugan
(72)**Name of Inventor :**
1)Pratyusa Mukherjee
2)Ms. Neha Kapila
3)Mr. Dhiraj Kapila
4)Dr. Ashulekha Gupta
5)Dr.Purnendu Shekhar Pandey
6)Dr. Hardeep Singh Saini
7)Dr. Sudip Mandal
8)Mr. Pijush Dutta
9)Dr. Chittaranjan Pradhan
10)Abhishek Bhattacharya
11)C.R.Srinivasan
12)Dr.S.Balamurugan

(57) Abstract :
The Artificial Intelligence based Outdoor Navigation System using Augmented Reality (AIONS) helps the traveler(s) to make use of the AIONS to navigate the unknown places easily without deviating to wrong path using 3D map. The traveller(s) can take a photo about an object/scenery, etc. If the traveler(s) don™t know how to reach that target location of the taken photo then they can send that taken photo to the cloud server. The cloud server will process the data of photo based on past history or previous database and it will generate a 3D map from the source person to the target. That 3D map will be send by cloud server to the source person. Then the traveller(s) can use that 3D map to navigate that target location easily and on time. The intelligent AIONS control unit helps the traveler(s) to navigate the unknown places and support the successful functioning of the whole AIONS system. By using this AIONS, the traveler(s) to make use of the AIONS to navigate the unknown places easily without deviating to wrong path using 3D map.

No. of Pages : 16 No. of Claims : 3

(12) PATENT APPLICATION PUBLICATION
(21) Application No.202131020491 A
(19) INDIA
(22) Date of filing of Application :05/05/2021
(43) Publication Date : 11/06/2021

(54) Title of the invention : SYSTEM FOR DEPRESSION DETECTION USING TEXTUAL AND EMOJI ANALYSIS IN SOCIAL-MEDIA THROUGH MACHINE LEARNING

(51) International classification	:G06Q0050000000, G06N0020000000, G06N0003080000, G06K0009000000, G06K0009460000
(31) Priority Document No	:NA
(32) Priority Date	:NA
(33) Name of priority country	:NA
(86) International Application No	:NA
Filing Date	:NA
(87) International Publication No	: NA
(61) Patent of Addition to Application Number	:NA
Filing Date	:NA
(62) Divisional to Application Number	:NA
Filing Date	:NA

(71)**Name of Applicant :**
1)Kumar Devadutta
Address of Applicant :Assistant Professor, School of Computer Engineering, KIIT Deemed to be University, Bhubaneswar, Odisha , India Orissa India
2)Navaneetha Krishnan Rajagopal
3)Muhammed Yousoof Ismail
4)Dr. Padmavati Shrivastava
5)Dr. Ashwini Kumar
6)Dr. Rajesh Deb Barman
7)Dr.Vineet Dahiya
8)Dr. Manish Gupta
9)Ms.Charu Singh
10)Dr. Niraj Upadhayaya
(72)**Name of Inventor :**
1)Kumar Devadutta
2)Navaneetha Krishnan Rajagopal
3)Muhammed Yousoof Ismail
4)Dr. Padmavati Shrivastava
5)Dr. Ashwini Kumar
6)Dr. Rajesh Deb Barman
7)Dr.Vineet Dahiya
8)Dr. Manish Gupta
9)Ms.Charu Singh
10)Dr. Niraj Upadhayaya

(57) Abstract :
The present invention relates to system for depression detection using textual and emoji analysis in social-media through machine learning. The objective of the present invention is to solve the problems in the prior art technologies related to social media user™s depression detection using machine learning and data processing.

No. of Pages : 27 No. of Claims : 5

(12) PATENT APPLICATION PUBLICATION
(21) Application No.202131020764 A
(19) INDIA
(22) Date of filing of Application :07/05/2021
(43) Publication Date : 11/06/2021

(54) Title of the invention : COMPOSITE SEPARATOR FOR LINGUAL RETAINERS

(51) International classification	:B32B0037000000, A61M0031000000, A61F0005560000, A61C0003000000, A61C0005000000
(31) Priority Document No	:NA
(32) Priority Date	:NA
(33) Name of priority country	:NA
(86) International Application No	:NA
Filing Date	:NA
(87) International Publication No	: NA
(61) Patent of Addition to Application Number	:NA
Filing Date	:NA
(62) Divisional to Application Number	:NA
Filing Date	:NA

(71)**Name of Applicant :**
1)Dr. Nivedita Sahoo
Address of Applicant :Department of Orthodontics and Dentofacial Orthopedics, Kalinga Institute of Dental Sciences, KIIT Deemed to be University, Bhubaneswar, Odisha, Pin-751024 Orissa India
2)Dr. Aravind Krishnan R
3)Dr. Bhagabati Prasad Dash
4)Dr. M.S. Rami Reddy
5)Dr. Saranya S
6)Dr. K Nagarjuna Prasad
7)Dr. Bhumika Maikhuri
8)Dr. Rajat Mohanty
9)Dr. Jugajyoti Pathi
(72)**Name of Inventor :**
1)Dr. Nivedita Sahoo
2)Dr. Aravind Krishnan R
3)Dr. Bhagabati Prasad Dash
4)Dr. M.S. Rami Reddy
5)Dr. Saranya S
6)Dr. K Nagarjuna Prasad
7)Dr. Bhumika Maikhuri
8)Dr. Rajat Mohanty
9)Dr. Jugajyoti Pathi

(57) Abstract :
A major difficulty faced by upcoming dental graduates is in stabilising the lingual wire. Inaccurate composite placement is also one of the chief concerns faced. It can lead to complications like lack of retention, poor oral hygiene as well as patient discomfort. Lingual retainers bonded on all six mandibular anterior teeth might induce unexpected movement of anterior teeth to such an extent that retreatment is necessary. Struggling to place the composite in the correct position in order to stabilize the fixed retainer is a major concern among beginners. When these complications are detected early, interceptive measures can be made which prevents damage to periodontal tissues and bone. However if they are found too late, they can be detrimental and retreatment might become necessary. The current method not only provides increased stability to the retainer wire but also allows placing the composite in a much easier and cost effective way.

No. of Pages : 11 No. of Claims : 10

(12) PATENT APPLICATION PUBLICATION
(21) Application No.202131020771 A
(19) INDIA
(22) Date of filing of Application :07/05/2021
(43) Publication Date : 11/06/2021

(54) Title of the invention : POWER GENERATION SYSTEMS USING ANIMAL POWER

(51) International classification	:F16H0001460000, F16H0003720000, F16H0001280000, B60K0007000000, F03D0015100000	(71)**Name of Applicant :** **1)AMIT KUMAR BAYEN** Address of Applicant :P.O. Dakshin Bijoynagar,via- Nimpith Ashram, P.S.- Joynagar, Dist.- South 24 Parganas, West Bengal, India - 743338 West Bengal India **2)ANKITA PAN**
(31) Priority Document No	:NA	(72)**Name of Inventor :** **1)AMIT KUMAR BAYEN**
(32) Priority Date	:NA	
(33) Name of priority country	:NA	
(86) International Application No	:NA	
Filing Date	:NA	
(87) International Publication No	: NA	
(61) Patent of Addition to Application Number	:NA	
Filing Date	:NA	
(62) Divisional to Application Number	:NA	
Filing Date	:NA	

(57) Abstract :
The present invention provides power generation systems using animal power. The power generation system comprises multiple power generation units (100) comprising a first gear system (200), a second gear system (300), a third gear system (400), a plurality of animal cabins (101), levers (102) connecting the gear systems to the animal cabins and metal rail tops (103) for resting the levers, wherein the first gear system (200), the second gear system (300) and the third gear system (400) are configured in a planetary gear arrangement system. The system has the ability to use animal power efficiently for cost-effective generation of electricity. ,

No. of Pages : 23 No. of Claims : 10

(12) PATENT APPLICATION PUBLICATION
(19) INDIA
(22) Date of filing of Application :07/05/2021
(21) Application No.202131020814 A
(43) Publication Date : 11/06/2021

(54) Title of the invention : HYGIENIC BITE BOARD

(51) International classification	:A61C0007360000, A61M0016040000, A61C0007280000, A61C0013097000, A63B0071080000
(31) Priority Document No	:NA
(32) Priority Date	:NA
(33) Name of priority country	:NA
(86) International Application No	:NA
Filing Date	:NA
(87) International Publication No	: NA
(61) Patent of Addition to Application Number	:NA
Filing Date	:NA
(62) Divisional to Application Number	:NA
Filing Date	:NA

(71)**Name of Applicant :**
1)Dr. Nivedita Sahoo
Address of Applicant :Department of Orthodontics and Dentofacial Orthopedics, Kalinga Institute of Dental Sciences, KIIT Deemed to be University, Bhubaneswar, Odisha, Pin-751024 Orissa India
2)Dr. K Nagarjuna Prasad
3)Dr. Aravind Krishnan
4)Dr. Shristi Srivastava
5)Dr. Bhumika Maikhuri
6)Dr. Rajat Mohanty
7)Dr. Arpita Singh
8)Dr K. Krishna Murthy
(72)**Name of Inventor :**
1)Dr. Nivedita Sahoo
2)Dr. K Nagarjuna Prasad
3)Dr. Aravind Krishnan
4)Dr. Shristi Srivastava
5)Dr. Bhumika Maikhuri
6)Dr. Rajat Mohanty
7)Dr. Arpita Singh
8)Dr K. Krishna Murthy

(57) Abstract :
Hygienic bite board consists of a rectangular ligature meshed occlusal table with soldered stainless steel sleeves (buccal and lingual). Through the sleeves the locking components (buccal and lingual) are passed which hooks onto the molar band buccally onto a buccal wire that is welded above the molar tube and lingually locks into the lingual sheath. The table acts as a lid that can be opened and closed by unlocking the buccal locking component only. Intraorally after placing the molar band with the appliance locked in position and separating medium applied onto the occlusal surface, bite block material is flowed onto the table with mesh and can be adjusted after it sets. The patient is trained to unlock and lock the buccal locking component. The appliance is removed once the purpose of the bite block is served and wouldn™t require any cleaning of the occlusal surface.

No. of Pages : 13 No. of Claims : 10

(12) PATENT APPLICATION PUBLICATION
(21) Application No.202131020913 A
(19) INDIA
(22) Date of filing of Application :08/05/2021
(43) Publication Date : 11/06/2021

(54) Title of the invention : STOP APPLIANCE - SIMULTANEOUSLY TREATING ORTHODONTIC PROBLEMS

(51) International classification	:A61C0007080000, A61C0007000000, A61F0005500000, A61F0005560000, A61P0017020000
(31) Priority Document No	:NA
(32) Priority Date	:NA
(33) Name of priority country	:NA
(86) International Application No	:NA
Filing Date	:NA
(87) International Publication No	: NA
(61) Patent of Addition to Application Number	:NA
Filing Date	:NA
(62) Divisional to Application Number	:NA
Filing Date	:NA

(71)**Name of Applicant :**
1)Dr. Aravind Krishnan
Address of Applicant :Department of Orthodontics and Dentofacial Orthopedics, Kalinga Institute of Dental Sciences, KIIT Deemed to be University, Bhubaneswar, Odisha, Pin-751024 Orissa India
2)Dr. Nivedita Sahoo
3)Dr. K. Nagarjuna Prasad
4)Dr. Kanika Singh Dhull
5)Dr. Jugajyoti Pathi
6)Dr. Rajat Mohanty
7)Dr. Bhumika Maikhuri
(72)**Name of Inventor :**
1)Dr. Aravind Krishnan
2)Dr. K. Nagarjuna Prasad
3)Dr. Jugajyoti Pathi
4)Dr. Kanika Singh Dhull
5)Dr. Rajat Mohanty
6)Dr. Bhumika Maikhuri
7)Dr. Nivedita Sahoo

(57) Abstract :
Oral equilibrium is affected by oral habits. If the oral habits persist beyond a certain age, it can cause great harm to the dentition. Therefore, it is important to intercept the habit and promote normal development. So, an appliance has been constructed which aims at treating a combination of problems simultaneously. The wire components include tongue crib and adams clasps on molars. Inclined plane with incisal capping is given in maxillary arch. It corrects habits such as tongue thrusting, thumb sucking, nail or lip biting, prevents cross bite, deep bite, flaring of maxillary anterior teeth and supra eruption of incisors. Also promotes mandibular growth by freeing it from distal interlocking. It is ideally indicated in early mixed dentition period with the intention of intercepting the habit and by promoting growth of mandible, before any established growth modification procedures are undertaken. This eventually leads to shortening of fixed orthodontic treatment time.

No. of Pages : 13 No. of Claims : 7

(12) PATENT APPLICATION PUBLICATION
(21) Application No.202131020960 A
(19) INDIA
(22) Date of filing of Application :08/05/2021
(43) Publication Date : 11/06/2021

(54) Title of the invention : A SYSTEM TO DETECT PREMATURE VENTRICULAR CONTRACTION (PVC) USING A MACHINE LEARNING ALGORITHM

(51) International classification	:A61B0005000000, A61B0005046800, A61B0005040000, G06K0009620000, G16H0050200000
(31) Priority Document No	:NA
(32) Priority Date	:NA
(33) Name of priority country	:NA
(86) International Application No	:NA
Filing Date	:NA
(87) International Publication No	: NA
(61) Patent of Addition to Application Number	:NA
Filing Date	:NA
(62) Divisional to Application Number	:NA
Filing Date	:NA

(71)**Name of Applicant :**
1)Dr. Jagdeep Rahul
Address of Applicant :Department of Electronics and Communication Engineering, Rajiv Gandhi University, Doimukh, Arunachal Pradesh, India-791112. Arunachal Pradesh India
2)Dr. Marpe Sora
(72)**Name of Inventor :**
1)Dr. Jagdeep Rahul
2)Dr. Marpe Sora

(57) Abstract :
The present disclosure relates to a system and method in the field of medical science. More specifically, the invention is directed to a system that detects an automatic premature ventricular contraction (PVC) using a machine learning algorithm. The PVC beat classification is proposed for detecting ventricular arrhythmia. ECG arrhythmia records are considered from MIT-BIH AD and denoised by using the discrete wavelet transform (DWT). Thereafter, a two-stage median filter is used to eliminate the baseline wander to obtain the clean and smooth ECG signal. The proposed method calculates the statistical features of extracted QRS complex segment of both PVCs and normal beats. KNN and SVM algorithms are used for the performance evaluation of the proposed method. The results obtained have shown that the PVCs classification method is highly accurate and reliable, and can be used for automatic classification of arrhythmia.

No. of Pages : 30 No. of Claims : 10

(12) PATENT APPLICATION PUBLICATION
(21) Application No.202131021765 A
(19) INDIA
(22) Date of filing of Application :14/05/2021
(43) Publication Date : 11/06/2021

(54) Title of the invention : AN AI AND IOT BASED TRAFFIC SURVEILLANCE SYSTEM FOR BIKE RIDERS AND METHOD THEREOF

(51) International classification	:H04N0007180000, G06K0009000000, G08G0001017000, G06Q0050260000, G08B0013196000
(31) Priority Document No	:NA
(32) Priority Date	:NA
(33) Name of priority country	:NA
(86) International Application No	:NA
Filing Date	:NA
(87) International Publication No	: NA
(61) Patent of Addition to Application Number	:NA
Filing Date	:NA
(62) Divisional to Application Number	:NA
Filing Date	:NA

(71)**Name of Applicant :**
1)Mrs Madhusmita Dash
Address of Applicant :PhD Scholar, NIT Arunachal Pradesh, PapumPare, Arunachal Pradesh, India- 791112 Arunachal Pradesh India
2)Aswini Kumar Patra
3)Dr. V. Gokula Krishnan
4)Yadav Rahul Shivaji
5)Dr.PinagadiVenkateswara Rao
6)Dr Vijay Kumar Sharma
7)Mr. AmitavaChakraborty
8)Priyanku Sharma
9)B Yugandhar
10)Dr. C. R. Rene Robin
(72)**Name of Inventor :**
1)Mrs Madhusmita Dash
2)Aswini Kumar Patra
3)Dr. V. Gokula Krishnan
4)Yadav Rahul Shivaji
5)Dr.PinagadiVenkateswara Rao
6)Dr Vijay Kumar Sharma
7)Mr. AmitavaChakraborty
8)Priyanku Sharma
9)B Yugandhar
10)Dr. C. R. Rene Robin

(57) Abstract :
The present disclosure relates to an A.I. and IoT based traffic surveillance system (100) for bike riders and the method (200) thereof. This invention is an A.I. and IoT based traffic surveillance system (100), comprising of a plurality of camera (102), a server (104) and a computing device (106). The cameras (102) are installed to capture images and videos of passerby and bike riders. The server (104) that receives these images is capable of processing and analyzing them to find the bike riders without helmet. Then the server sends the information regarding the violator to the computing device (106). The computing device (106) is any electronic device on which the law enforcement agencies can get the information about the violator.The present invention also discloses the method (200) thereof. (Fig. 1 will be the reference figures)

No. of Pages : 20 No. of Claims : 6

(12) PATENT APPLICATION PUBLICATION
(21) Application No.202131021838 A
(19) INDIA
(22) Date of filing of Application :14/05/2021
(43) Publication Date : 11/06/2021

(54) Title of the invention : PROCESS FOR LARGE SCALE ON-SITE PRODUCTION OF MICROBES FOR OIL & GAS FIELDS

(51) International classification	:C02F0103100000, C12M0001420000, C02F0101100000, E21B0043000000, E02B0017020000	(71)**Name of Applicant :** **1)Caliche Pvt. Ltd.** Address of Applicant :10 Sweet Cottage, Near MLP Dog Squad Quarters, Golf Links, Shillong-793001, Meghalaya, India Meghalaya India
(31) Priority Document No	:NA	(72)**Name of Inventor :**
(32) Priority Date	:NA	**1)Amit Priyadarshan**
(33) Name of priority country	:NA	**2)Anandh Mathew**
(86) International Application No	:NA	**3)Dr. Debajit Kalita**
Filing Date	:NA	**4)Prof S.R. Joshi**
(87) International Publication No	: NA	
(61) Patent of Addition to Application Number	:NA	
Filing Date	:NA	
(62) Divisional to Application Number	:NA	
Filing Date	:NA	

(57) Abstract :
The present invention provides a novel and simple process for scale on-site production of microbes for oil & gas fields comprising culture of desired microorganisms in huge volume by deployment of already existing provisions and resources normally available at the well site. This process is easy to apply and modulate. It involves less moving parts and hence their maintenance is significantly low. The parts are modular and can be carried to the well-site for on-site culturing of microbes. The process for scale on-site production of microbes is customizable can be applied at different locations at the same time.

No. of Pages : 16 No. of Claims : 8

Publication After 18 Months:

The following Patent Applications have been published under Section 11A (3) of The Patents (Amendment) Act, 2005. Any Person may file representation by way of opposition to the Controller of Patents at the appropriate office against the grant of the patent in the prescribed manner under section 25(1) of the Patents (Amendment) Act, 2005 read with the rule 55 of The Patents (Amendment) Rules, 2006:

(12) PATENT APPLICATION PUBLICATION

(19) INDIA

(22) Date of filing of Application :04/12/2019

(21) Application No.201911049845 A

(43) Publication Date : 11/06/2021

(54) Title of the invention : A CHEMICAL COMPOSITION FOR DETECTION OF FURFURAL AND HYDROXYMETHYLFURFURAL IN FOOD COMMODITIES AND PROCESS FOR DETECTION THEREOF

(51) International classification	:C07D0307500000, C07D0307460000, C07D0307480000, G01N0033020000, C08G0008040000	(71)**Name of Applicant :** **1)COUNCIL OF SCIENTIFIC AND INDUSTRIAL RESEARCH** Address of Applicant :ANUSANDHAN BHAWAN, 2 RAFI MARG NEW DELHI-110001, INDIA Delhi India
(31) Priority Document No	:NA	(72)**Name of Inventor :**
(32) Priority Date	:NA	**1)SRISHTI MEHROTRA**
(33) Name of priority country	:NA	**2)PAWAN KUMAR RAI**
(86) International Application No	:NA	**3)SANDEEP KUMAR SHARMA**
Filing Date	:NA	
(87) International Publication No	: NA	
(61) Patent of Addition to Application Number	:NA	
Filing Date	:NA	
(62) Divisional to Application Number	:NA	
Filing Date	:NA	

(57) Abstract :
Furfural and hydroxymethylfurfural (HMF) are formed in food as a result of maillard reaction indicating the degradation of food products. They are also present as a byproduct of sugar degradation in oils and lignocellulosic biomass and hamper the quality and biofuel yield. The present invention provides a novel and rapid quantitative method for their detection in complex matrices. The solution after the reaction changes colour to deep red for furfural and orange for HMF. The said change in colour can be detected spectrophotometrically at 530 nm. The method omits sample processing and quantitates furfural and HMF with LOD of 0.002% (v/v) in fruit juice and 0.004% (v/v) in seed oils.

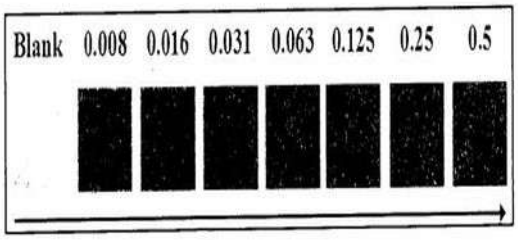

No. of Pages : 13 No. of Claims : 3

(12) PATENT APPLICATION PUBLICATION
(21) Application No.201911049866 A
(19) INDIA
(22) Date of filing of Application :04/12/2019
(43) Publication Date : 11/06/2021

(54) Title of the invention : FROTHY PRESSURISED BEVERAGE IN A CAN

(51) International classification	:A23F0005240000, A23C0009154000, A23L0002020000, A23C0009152000, B65D0085730000	(71)**Name of Applicant :** **1)RAHUL GIDWANI** Address of Applicant :H.NO.-405/11, LALITA PARK LAXMI NAGAR DELHI NEW DELHI-110092, INDIA Delhi India
(31) Priority Document No	:NA	(72)**Name of Inventor :** **1)RAHUL GIDWANI**
(32) Priority Date	:NA	
(33) Name of priority country	:NA	
(86) International Application No	:NA	
Filing Date	:NA	
(87) International Publication No	: NA	
(61) Patent of Addition to Application Number	:NA	
Filing Date	:NA	
(62) Divisional to Application Number	:NA	
Filing Date	:NA	

(57) Abstract :
A process of pressurised packaged liquid beverage in a sealed container once opened produtes a frothy/foamy ready to drink beverage. This process includes partially filling a container with liquid beverage leaving a place for a small tube on top that is closed from below and open from above supported by branches/handles that mounts on top of container on its edges introducing a volume of gas in liquid/solid form inside the small tube before sealing the container and agitating the liquid beverage inside the sealed container.When the container is opened, the liquid beverage increases in volume and separates into liquid phase and a drinkable foam phase.The small tube used to avoid gas in liquid/Solid ice form to quickly vaporise allowing extra time to seal the container that helps in agitation of gas with the liquid beverage once container is seamed/sealed.The liquid beverage may include milk, coffee, iced tea (base as water), fruit juice, smoothies or mixtures thereof, particularly mixtures of milk and coffee, and may further include a gum. The gas may be nitrous oxide(N20).

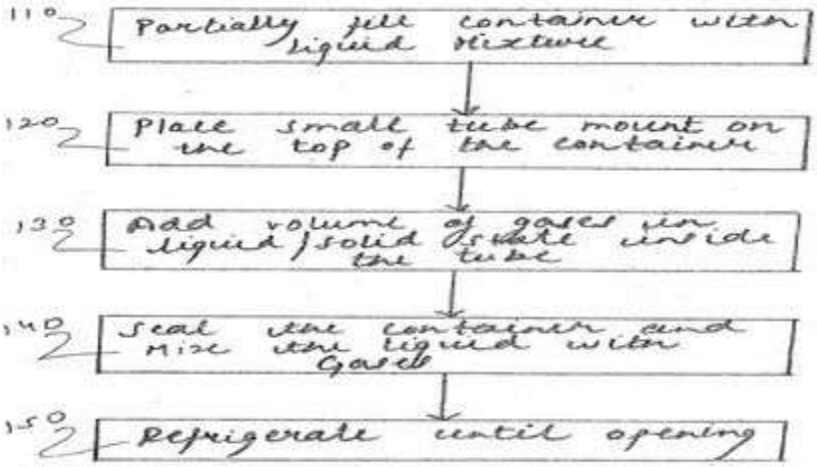

No. of Pages : 37 No. of Claims : 16

(12) PATENT APPLICATION PUBLICATION
(19) INDIA
(22) Date of filing of Application :04/12/2019

(21) Application No.201911049871 A
(43) Publication Date : 11/06/2021

(54) Title of the invention : METHOD FOR ALERT SYSTEM TO DETECT RADIATION EMERGENCY DOSES

(51) International classification	:G06K0009000000, G06K0009620000, G07D0007120000, G06K0009480000, G06K0009380000
(31) Priority Document No	:NA
(32) Priority Date	:NA
(33) Name of priority country	:NA
(86) International Application No	:NA
Filing Date	:NA
(87) International Publication No	: NA
(61) Patent of Addition to Application Number	:NA
Filing Date	:NA
(62) Divisional to Application Number	:NA
Filing Date	:NA

(71)**Name of Applicant :**
1)Chairman, Defence Research & Development Organisation
Address of Applicant :Ministry of Defence, Govt of India, Room No 348, B - Wing, DRDO Bhawan, Rajaji Marg, New Delhi 110 011, India, Delhi India
(72)**Name of Inventor :**
1)Shukla, Sandeep Kumar
2)Sharma, Ajay Kumar
3)Singh, Sukhvir
4)Goswami, Pradeep
5)Manda, Kailash
6)Kalonia, Aman
7)Shaw, Priyanka

(57) Abstract :
A device (100) and a method for determining amount of radiation in an environment are described. Multiple images of an environment may be captured using a camera of the device (100), for a predefined time period. The images may be converted into greyscale images. For each of the greyscale images, value of each pixel present in a greyscale image may be compared with average values of surrounding pixels, and the greyscale images may be converted into binary images based on the comparison. Flash spots, generated by ionization electrons, present in each binary image may be identified. A quantity of radiation present in the environment may be determined based on a count of the flash spots.

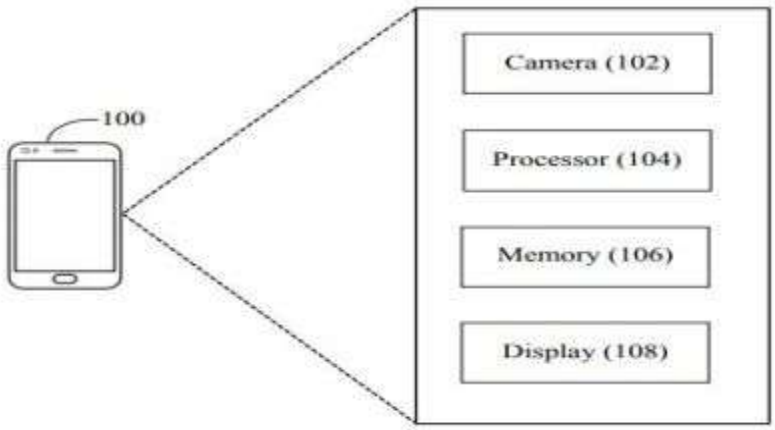

No. of Pages : 22 No. of Claims : 10

(12) PATENT APPLICATION PUBLICATION
(19) INDIA
(22) Date of filing of Application :04/12/2019

(21) Application No.201911049980 A
(43) Publication Date : 11/06/2021

(54) Title of the invention : BENZOTHIADIAZEPINE COMPOUNDS AND THEIR USE AS BILE ACID MODULATORS •

(51) International classification	:C07D0285360000, A61K0031554000, C07D0417120000, C07D0487080000, A61K0031498500
(31) Priority Document No	:NA
(32) Priority Date	:NA
(33) Name of priority country	:NA
(86) International Application No	:NA
Filing Date	:NA
(87) International Publication No	: NA
(61) Patent of Addition to Application Number	:NA
Filing Date	:NA
(62) Divisional to Application Number	:NA
Filing Date	:NA

(71)**Name of Applicant :**
1)Albireo AB
Address of Applicant :Arvid Wallgrens backe 20, 413 46 Gteborg, Sweden Sweden
(72)**Name of Inventor :**
1)GILLBERG, Per-Gran
2)STARKE, Ingemar
3)KULKARNI, Santosh S.

(57) Abstract :
The invention relates to 1,2,5-benzothiadiazepine derivatives of formula (I). These compounds are bile acid modulators having apical sodium-dependent bile acid transporter (ASBT) and/or liver bile acid transport (LBAT) inhibitory activity. The invention also relates to pharmaceutical compositions comprising these compounds and to the use of these compounds in the treatment of cardiovascular diseases, fatty acid metabolism and glucose utilization disorders, gastrointestinal diseases and liver diseases.

No. of Pages : 125 No. of Claims : 15

(12) PATENT APPLICATION PUBLICATION
(19) INDIA
(22) Date of filing of Application :04/12/2019

(21) Application No.201911049981 A
(43) Publication Date : 11/06/2021

(54) Title of the invention : BENZOTHIADIAZEPINE COMPOUNDS AND THEIR USE AS BILE ACID MODULATORS •

(51) International classification	:C07D0285360000, A61K0031554000, C07D0417120000, C07D0487080000, A61K0031498500
(31) Priority Document No	:NA
(32) Priority Date	:NA
(33) Name of priority country	:NA
(86) International Application No	:NA
Filing Date	:NA
(87) International Publication No	: NA
(61) Patent of Addition to Application Number	:NA
Filing Date	:NA
(62) Divisional to Application Number	:NA
Filing Date	:NA

(71)**Name of Applicant :**
1)Albireo AB
Address of Applicant :Arvid Wallgrens backe 20, 413 46 Gteborg, Sweden Sweden
(72)**Name of Inventor :**
1)GILLBERG, Per-Gran
2)STARKE, Ingemar
3)KULKARNI, Santosh S.
4)MATTSSON, Jan

(57) Abstract :
The invention relates to 1,2,5-benzothiadiazepine derivatives of formula (I). These compounds are bile acid modulators having apical sodium-dependent bile acid transporter (ASBT) and/or liver bile acid transport (LBAT) inhibitory activity. The invention also relates to pharmaceutical compositions comprising these compounds and to the use of these compounds in the treatment of cardiovascular diseases, fatty acid metabolism and glucose utilization disorders, gastrointestinal diseases and liver diseases.

No. of Pages : 139 No. of Claims : 15

(12) PATENT APPLICATION PUBLICATION
(19) INDIA
(22) Date of filing of Application :04/12/2019

(21) Application No.201911049982 A
(43) Publication Date : 11/06/2021

(54) Title of the invention : BENZOTHIA(DI)AZEPINE COMPOUNDS AND THEIR USE AS BILE ACID MODULATORS •

(51) International classification	:C07D0285360000, A61K0031554000, C07D0281100000, C07D0417120000, C07D0487080000
(31) Priority Document No	:NA
(32) Priority Date	:NA
(33) Name of priority country	:NA
(86) International Application No	:NA
Filing Date	:NA
(87) International Publication No	: NA
(61) Patent of Addition to Application Number	:NA
Filing Date	:NA
(62) Divisional to Application Number	:NA
Filing Date	:NA

(71)**Name of Applicant :**
1)Albireo AB
Address of Applicant :Arvid Wallgrens backe 20, 413 46 Gteborg, Sweden Sweden
(72)**Name of Inventor :**
1)GILLBERG, Per-Gran
2)STARKE, Ingemar
3)KULKARNI, Santosh S.

(57) Abstract :
The invention relates to 1,5-benzothiazepine and 1,2,5-benzothiadiazepine derivatives of formula (I). These compounds are bile acid modulators having apical sodium-dependent bile acid transporter (ASBT) and/or liver bile acid transport (LBAT) inhibitory activity. The invention also relates to pharmaceutical compositions comprising these compounds and to the use of these compounds in the treatment of cardiovascular diseases, fatty acid metabolism and glucose utilization disorders, gastrointestinal diseases and liver diseases.

No. of Pages : 150 No. of Claims : 15

(12) PATENT APPLICATION PUBLICATION
(19) INDIA
(22) Date of filing of Application :04/12/2019

(21) Application No.201911049983 A
(43) Publication Date : 11/06/2021

(54) Title of the invention : BENZOTHIA(DI)AZEPINE COMPOUNDS AND THEIR USE AS BILE ACID MODULATORS •

(51) International classification	:C07D0285360000, A61K0031554000, C07D0281100000, C07D0417120000, C07D0487080000
(31) Priority Document No	:NA
(32) Priority Date	:NA
(33) Name of priority country	:NA
(86) International Application No	:NA
Filing Date	:NA
(87) International Publication No	: NA
(61) Patent of Addition to Application Number	:NA
Filing Date	:NA
(62) Divisional to Application Number	:NA
Filing Date	:NA

(71)**Name of Applicant :**
1)Albireo AB
Address of Applicant :Arvid Wallgrens backe 20, 413 46 Gteborg, Sweden Sweden
(72)**Name of Inventor :**
1)GILLBERG, Per-Gran
2)STARKE, Ingemar
3)KULKARNI, Santosh S.

(57) Abstract :
The invention relates to 1,5-benzothiazepine and 1,2,5-benzothiadiazepine derivatives of formula (I). These compounds are bile acid modulators having apical sodium-dependent bile acid transporter (ASBT) and/or liver bile acid transport (LBAT) inhibitory activity. The invention also relates to pharmaceutical compositions comprising these compounds and to the use of these compounds in the treatment of cardiovascular diseases, fatty acid metabolism and glucose utilization disorders, gastrointestinal diseases and liver diseases.

No. of Pages : 142 No. of Claims : 15

(12) PATENT APPLICATION PUBLICATION
(19) INDIA
(22) Date of filing of Application :04/12/2019

(21) Application No.201911049984 A
(43) Publication Date : 11/06/2021

(54) Title of the invention : BENZOTHIA(DI)AZEPINE COMPOUNDS AND THEIR USE AS BILE ACID MODULATORS •

(51) International classification	:C07D0285360000, A61K0031554000, C07D0281100000, C07D0417120000, C07D0487080000
(31) Priority Document No	:NA
(32) Priority Date	:NA
(33) Name of priority country	:NA
(86) International Application No	:NA
Filing Date	:NA
(87) International Publication No	: NA
(61) Patent of Addition to Application Number	:NA
Filing Date	:NA
(62) Divisional to Application Number	:NA
Filing Date	:NA

(71)**Name of Applicant :**
1)Albireo AB
Address of Applicant :Arvid Wallgrens backe 20, 413 46 Gteborg, Sweden Sweden
(72)**Name of Inventor :**
1)GILLBERG, Per-Gran
2)STARKE, Ingemar
3)KULKARNI, Santosh S.

(57) Abstract :
The invention relates to certain 1,5-benzothiazepine and 1,2,5-benzothiadiazepine derivatives as defined herein. These compounds are bile acid modulators having apical sodium-dependent bile acid transporter (ASBT) and/or liver bile acid transport (LBAT) inhibitory activity. The invention also relates to pharmaceutical compositions comprising these compounds and to the use of these compounds in the treatment of cardiovascular diseases, fatty acid metabolism and glucose utilization disorders, gastrointestinal diseases and liver diseases.

No. of Pages : 154 No. of Claims : 8

(12) PATENT APPLICATION PUBLICATION
(19) INDIA
(22) Date of filing of Application :04/12/2019
(21) Application No.201911049985 A
(43) Publication Date : 11/06/2021

(54) Title of the invention : BENZOTHIAZEPINE COMPOUNDS AND THEIR USE AS BILE ACID MODULATORS •

(51) International classification	:C07D0281100000, A61K0031554000, C07D0417120000, C07D0487080000, A61K0031498500
(31) Priority Document No	:NA
(32) Priority Date	:NA
(33) Name of priority country	:NA
(86) International Application No	:NA
Filing Date	:NA
(87) International Publication No	: NA
(61) Patent of Addition to Application Number	:NA
Filing Date	:NA
(62) Divisional to Application Number	:NA
Filing Date	:NA

(71)**Name of Applicant :**
1)Albireo AB
Address of Applicant :Arvid Wallgrens backe 20, 413 46 Gteborg, Sweden Sweden
(72)**Name of Inventor :**
1)GILLBERG, Per-Gran
2)STARKE, Ingemar
3)KULKARNI, Santosh S.

(57) Abstract :
The invention relates to 1,5-benzothiazepine derivatives of formula (I). These compounds are bile acid modulators having apical sodium-dependent bile acid transporter (ASBT) and/or liver bile acid transport (LBAT) inhibitory activity. The invention also relates to pharmaceutical compositions comprising these compounds and to the use of these compounds in the treatment of cardiovascular diseases, fatty acid metabolism and glucose utilization disorders, gastrointestinal diseases and liver diseases.

No. of Pages : 159 No. of Claims : 15

(12) PATENT APPLICATION PUBLICATION
(19) INDIA
(22) Date of filing of Application :04/12/2019

(21) Application No.201911049986 A
(43) Publication Date : 11/06/2021

(54) Title of the invention : BENZOTHIAZEPINE COMPOUNDS AND THEIR USE AS BILE ACID MODULATORS •

(51) International classification	:C07D0281100000, A61K0031554000, C07D0417120000, C07D0487080000, A61K0031498500
(31) Priority Document No	:NA
(32) Priority Date	:NA
(33) Name of priority country	:NA
(86) International Application No	:NA
Filing Date	:NA
(87) International Publication No	: NA
(61) Patent of Addition to Application Number	:NA
Filing Date	:NA
(62) Divisional to Application Number	:NA
Filing Date	:NA

(71)**Name of Applicant :**
1)Albireo AB
Address of Applicant :Arvid Wallgrens backe 20, 413 46 Gteborg, Sweden Sweden
(72)**Name of Inventor :**
1)GILLBERG, Per-Gran
2)STARKE, Ingemar
3)KULKARNI, Santosh S.
4)MATTSSON, Jan

(57) Abstract :
The invention relates to 1,5-benzothiazepine derivatives of formula (I). These compounds are bile acid modulators having apical sodium-dependent bile acid transporter (ASBT) and/or liver bile acid transport (LBAT) inhibitory activity. The invention also relates to pharmaceutical compositions comprising these compounds and to the use of these compounds in the treatment of cardiovascular diseases, fatty acid metabolism and glucose utilization disorders, gastrointestinal diseases and liver diseases.

No. of Pages : 174 No. of Claims : 14

(12) PATENT APPLICATION PUBLICATION
(19) INDIA
(22) Date of filing of Application :04/12/2019

(21) Application No.201911049988 A
(43) Publication Date : 11/06/2021

(54) Title of the invention : SYSTEM AND METHOD FOR OPTIMIZING ENERGY CONSUMPTION IN A GOODS COMPARTMENT OF DELIVERY VEHICLES

(51) International classification	:G06Q0010080000, B60H0001000000, G06Q0050120000, G05B0019418000, G05D0023190000	(71)**Name of Applicant :** **1)Daimler AG** Address of Applicant :70546 Stuttgart Germany Germany (72)**Name of Inventor :** **1)Mr. Sashank Vedula** **2)Mr. Vivek Prahlada** **3)Mr. Divas Bahuguna** **4)Mr. Ayush Choubey**
(31) Priority Document No	:NA	
(32) Priority Date	:NA	
(33) Name of priority country	:NA	
(86) International Application No	:NA	
Filing Date	:NA	
(87) International Publication No	: NA	
(61) Patent of Addition to Application Number	:NA	
Filing Date	:NA	
(62) Divisional to Application Number	:NA	
Filing Date	:NA	

(57) Abstract :
A system 100 and method for thermal management of a goods compartment of a delivery vehicle is disclosed being based on determining a speed profile for the delivery vehicle along a predefined route, determining duration of time taken by the vehicle to reach next delivery location from a preceding stopping location; predicting, based on attributes of the goods to be delivered at the next delivery location, a time of interaction of inside of the goods compartment of the delivery vehicle with the ambient, at the next delivery location; and determining a location before the next delivery location to deactivate a cooling unit configured with the goods compartment without allowing temperature of the stored goods exceeding a threshold temperature until the vehicle reaches the next delivery location to facilitate optimum utilisation of energy for cooling while maintain minimum amount of cooling required to keep the goods in health.

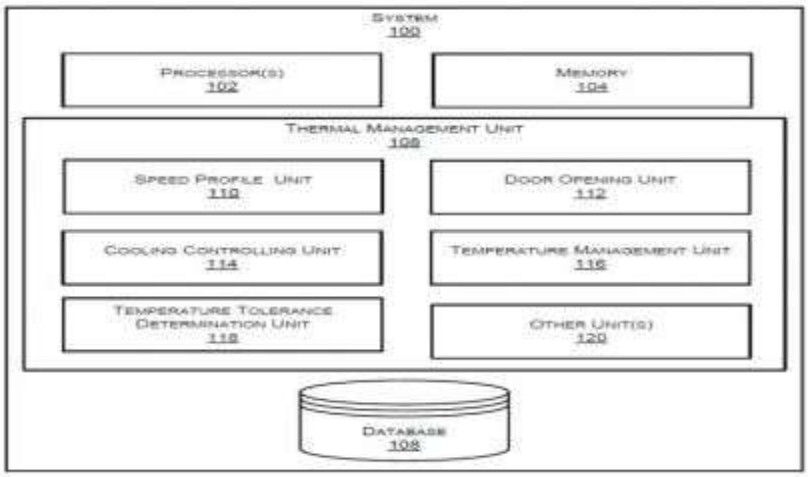

No. of Pages : 26 No. of Claims : 10

(12) PATENT APPLICATION PUBLICATION
(21) Application No.201911049989 A
(19) INDIA
(22) Date of filing of Application :04/12/2019
(43) Publication Date : 11/06/2021

(54) Title of the invention : DEVICE FOR DEVELOPING GERMFREE AND GNOTOBIOTIC MOSQUITOES

(51) International classification	:A61B0017000000, C12M0001120000, C12M0001000000, F16C0033660000, B26B0019380000	(71)**Name of Applicant :** **1)INDIAN COUNCIL OF MEDICAL RESEARCH** Address of Applicant :V. Ramalingaswami Bhawan, P.O. Box No. 4911, Ansari Nagar, New Delhi - 110029, India Delhi India (72)**Name of Inventor :** **1)M. Muniaraj**
(31) Priority Document No	:NA	
(32) Priority Date	:NA	
(33) Name of priority country	:NA	
(86) International Application No	:NA	
Filing Date	:NA	
(87) International Publication No	: NA	
(61) Patent of Addition to Application Number	:NA	
Filing Date	:NA	
(62) Divisional to Application Number	:NA	
Filing Date	:NA	

(57) Abstract :
The present invention relates to a device (10) for rearing and incubation of germfree and gnotobiotic insects in a controlled environment. The device (10) comprises of a support structure (11) having an interior space (12), a non-porous cover (13) configured to cover the support structure, a closure device (14) configured to close an opening (15) of the non-porous cover (13) wherein said support structure (11) is provided with a neck like provision(16) for fixing a porous element (17) configured to close the opening of said support structure (11) and allowing sterilized air to pass through it.

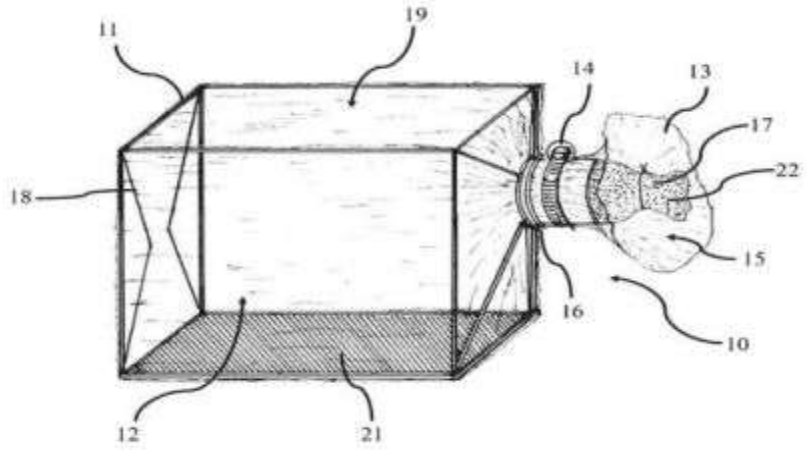

No. of Pages : 27 No. of Claims : 12

(12) PATENT APPLICATION PUBLICATION
(19) INDIA
(22) Date of filing of Application :04/12/2019

(21) Application No.201911049999 A
(43) Publication Date : 11/06/2021

(54) Title of the invention : AN ARRANGEMENT FOR AIR FLOW IN A CONVERTIBLE REFRIGERATOR

(51) International classification	:F25D0017060000, F25D0011020000, H05K0007200000, F04D0029600000, F25D0013060000	(71)**Name of Applicant :** **1)LG ELECTRONICS INC.** Address of Applicant :20 Yeouido-dong, Yeongdeungpo-gu, Seoul 150-721, Republic of Korea Republic of Korea
(31) Priority Document No	:NA	(72)**Name of Inventor :** **1)Agrawal Saurabh** **2)Singh Amar**
(32) Priority Date	:NA	
(33) Name of priority country	:NA	
(86) International Application No	:NA	
Filing Date	:NA	
(87) International Publication No	: NA	
(61) Patent of Addition to Application Number	:NA	
Filing Date	:NA	
(62) Divisional to Application Number	:NA	
Filing Date	:NA	

(57) Abstract :
An arrangement (100) for air flow in a convertible refrigerator is provided. The arrangement (100) comprises a freezer compartment (102), a refrigeration compartment (304), a permanent freezer compartment (110), a grill fan assembly (202), a plurality of fan units (104, 106) and a duct channel assembly (108) . The permanent freezer compartment (110) is provided inside the freezer compartment (102) . The grill fan assembly (202) is provided for blowing air into the freezer compartment (102). The plurality of fan units (104, 106) are provided inside the grill fan assembly (202) for blowing cool air into the freezer compartment (102) and the refrigeration compartment (304) . The duct channel assembly (108) is provided for passing the cool air from the plurality of fan units (104, 106) of the grill fan assembly (202) to the refrigeration compartment (304) and the freezer compartment (102) to maintain the temperature.

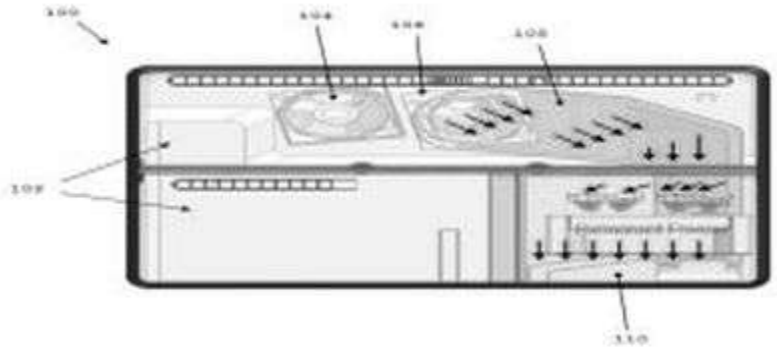

No. of Pages : 24 No. of Claims : 29

(12) PATENT APPLICATION PUBLICATION
(21) Application No.201911050000 A
(19) INDIA
(22) Date of filing of Application :04/12/2019
(43) Publication Date : 11/06/2021

(54) Title of the invention : AN ARRANGEMENT FOR COOLING A HYBRID DOUBLE DOOR CONVERTIBLE REFRIGERATOR

(51) International classification	:F25D0017060000, F25D0029000000, F25D0011020000, F25B0021020000, B60R0016033000	(71)**Name of Applicant :** **1)LG ELECTRONICS INC.** Address of Applicant :20 Yeouido-dong, Yeongdeungpo-gu, Seoul 150-721, Republic of Korea Republic of Korea
(31) Priority Document No	:NA	(72)**Name of Inventor :** **1)Agrawal Praveen**
(32) Priority Date	:NA	**2)Kumar Sachin**
(33) Name of priority country	:NA	
(86) International Application No	:NA	
Filing Date	:NA	
(87) International Publication No	: NA	
(61) Patent of Addition to Application Number	:NA	
Filing Date	:NA	
(62) Divisional to Application Number	:NA	
Filing Date	:NA	

(57) Abstract :
An arrangement (10 0) for cooling a hybrid double door convertible refrigerator (102) is provided. The arrangement (100) comprises a freezer compartment (104), a refrigeration compartment (106), Vapor Compression Refrigerator System VCRS (110), a peltier module (112), a plurality of sensors and an electrical assembly (306) . The plurality of sensors provided inside the hybrid double door convertible refrigerator (102) to detect the temperature of the freezer compartment (104) and the refrigeration compartment (106) . The electrical assembly is mounted on a printed circuit board (PCB) assembly to provide control on the operations of the VCRS (110) and the peltier module (112) of the hybrid double door convertible refrigerator (102). The freezer compartment (104) is cooled by the VCRS (110) and the refrigeration compartment (106) is cooled by the peltier module (112) separately.

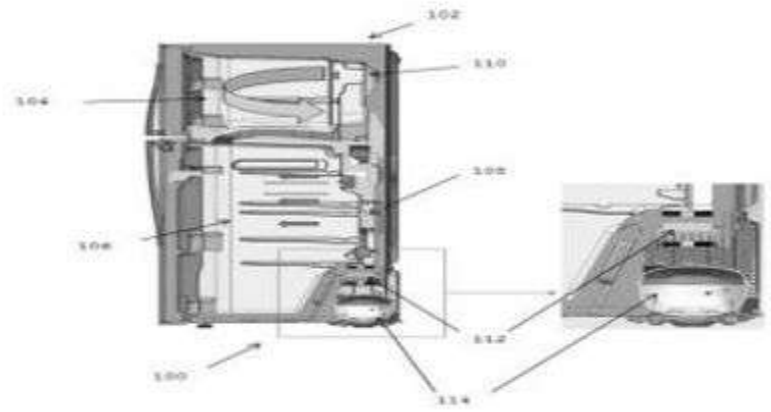

No. of Pages : 21 No. of Claims : 31

(12) PATENT APPLICATION PUBLICATION
(19) INDIA
(22) Date of filing of Application :04/12/2019

(21) Application No.201911050006 A
(43) Publication Date : 11/06/2021

(54) Title of the invention : A THERMALLY EFFICIENT OVER-EXPANSION STROKE BASED ENGINE

(51) International classification	:F02D0041380000, G06K0009000000, F02B0047020000, G06T0011200000, G16H0050300000	(71)**Name of Applicant :** **1)INDIAN INSTITUTE OF TECHNOLOGY (BANARAS HINDU UNIVERSITY), VARANASI** Address of Applicant :Varanasi-221005, Uttar Pradesh, India Uttar Pradesh India
(31) Priority Document No	:NA	(72)**Name of Inventor :**
(32) Priority Date	:NA	**1)JEEWAN VACHAN TIRKEY**
(33) Name of priority country	:NA	**2)SHAILENDRA KUMAR SHUKLA**
(86) International Application No	:NA	
Filing Date	:NA	
(87) International Publication No	: NA	
(61) Patent of Addition to Application Number	:NA	
Filing Date	:NA	
(62) Divisional to Application Number	:NA	
Filing Date	:NA	

(57) Abstract :
The present invention relates to an over-expansion stroke based engine with an eccentric crankshaft to increase thermal efficiency as well as brake mean effective pressure and decrease the fuel consumption. The over-expansion stroke based engine comprises of a cylinder, a piston, a slotted crank, a crankshaft, and a fixed gear.

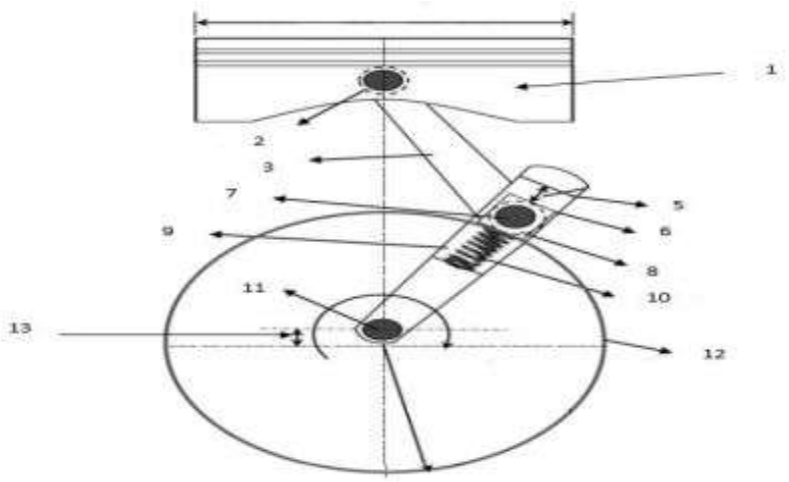

No. of Pages : 15 No. of Claims : 5

(12) PATENT APPLICATION PUBLICATION
(19) INDIA
(22) Date of filing of Application :04/12/2019

(21) Application No.201911050058 A
(43) Publication Date : 11/06/2021

(54) Title of the invention : A POROUS SCAFFOLD COMPOSITION FOR TISSUE REGENERATION AND METHOD OF PREPARING THE SAME

(51) International classification	:A61L0027560000, A61L0027380000, A61L0027580000, A61L0027540000, A61K0031728000
(31) Priority Document No	:NA
(32) Priority Date	:NA
(33) Name of priority country	:NA
(86) International Application No	:NA
Filing Date	:NA
(87) International Publication No	: NA
(61) Patent of Addition to Application Number	:NA
Filing Date	:NA
(62) Divisional to Application Number	:NA
Filing Date	:NA

(71)**Name of Applicant :**
1)BIRLA INSTITUTE OF TECHNOLOGY & SCIENCE (BITS), PILANI
Address of Applicant :Birla Institute of Technology & Science (BITS), Pilani, Pilani Campus, Vidya Vihar, Pilani, Jhunjunu District, Rajasthan 333031, India. Rajasthan India
(72)**Name of Inventor :**
1)Aniruddha Roy
2)Swati Sharma

(57) Abstract :
A porous scaffold composition for tissue regeneration and method of preparing the same The present invention relates to porous scaffold composition for tissue regeneration. The composition comprises a polyelectrolyte complex of three polymers i.e. chitosan, chondroitin sulfate and hyaluronic acid. The scaffold is formed spontaneously in-situ upon mixing of the three polymers. Cells can be completely engrafted into the scaffold by mixing the cells with the polymer solutions at the time of forming the scaffold.

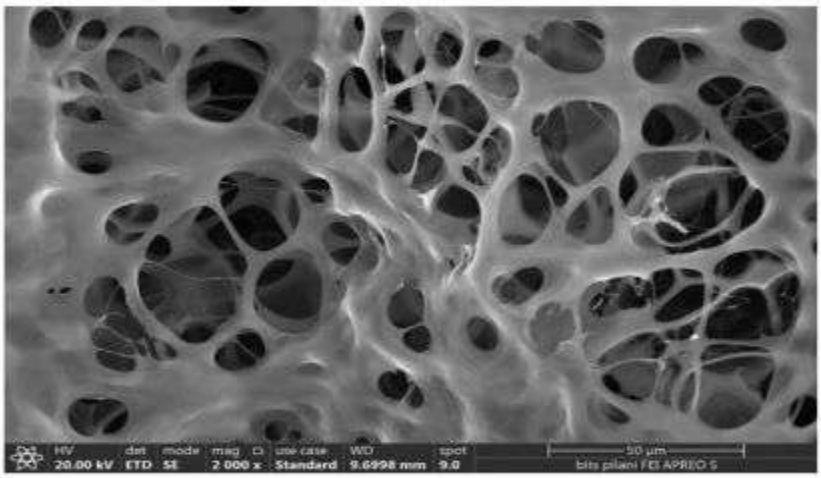

No. of Pages : 27 No. of Claims : 15

(12) PATENT APPLICATION PUBLICATION
(21) Application No.201911050076 A
(19) INDIA
(22) Date of filing of Application :05/12/2019
(43) Publication Date : 11/06/2021

(54) Title of the invention : PERSON IDENTIFICATION AND IMPOSTER DETECTION USING FOOTFALL GENERATED SEISMIC SIGNALS

(51) International classification	:G06K0009000000, G06K0009620000, G06F0021320000, G11B0020100000, G07C0009000000
(31) Priority Document No	:NA
(32) Priority Date	:NA
(33) Name of priority country	:NA
(86) International Application No	:NA
Filing Date	:NA
(87) International Publication No	: NA
(61) Patent of Addition to Application Number	:NA
Filing Date	:NA
(62) Divisional to Application Number	:NA
Filing Date	:NA

(71)**Name of Applicant :**
1)INDIAN INSTITUTE OF TECHNOLOGY DELHI
Address of Applicant :Hauz Khas, New Delhi - 110016 Delhi India
(72)**Name of Inventor :**
1)KAR, Subrat
2)MUKHOPADHYAY, Bodhibrata
3)ANCHAL, Sahil

(57) Abstract :
A smart device, biometric authentication system and a corresponding method thereof for person identification and imposter detection has been disclosed. The method comprises detection and extraction of seismic signals generated from corresponding footfalls, by means of unsupervised learning based detection and extraction module (USLEEM) and detection and identification of imposter and/or registered users respectively by means of an identification module.

No. of Pages : 40 No. of Claims : 9

(12) PATENT APPLICATION PUBLICATION
(21) Application No.201911050077 A
(19) INDIA
(22) Date of filing of Application :05/12/2019
(43) Publication Date : 11/06/2021

(54) Title of the invention : MULTI - PERSON TRACKING USING APPEARANCE SEARCH

(51) International classification	:G06K0009000000, G09B0019000000, G06F0016583000, G06T0011600000, H04B0007080000	(71)**Name of Applicant :** **1)Sanjay Sinha** Address of Applicant :Star Tower, 610, 6th Floor, Sector - 30, Gurugram, Haryana Haryana India (72)**Name of Inventor :** **1)Seshadri Sastry Kunapuli** **2)Praveen Chakravarthy** **3)Upasana Singh** **4)S Ravi Kumar** **5)Kritika Thakur**
(31) Priority Document No	:NA	
(32) Priority Date	:NA	
(33) Name of priority country	:NA	
(86) International Application No	:NA	
Filing Date	:NA	
(87) International Publication No	: NA	
(61) Patent of Addition to Application Number	:NA	
Filing Date	:NA	
(62) Divisional to Application Number	:NA	
Filing Date	:NA	

(57) Abstract :
One shot(using only one training example) recognition of person based on his/her overall appearance.

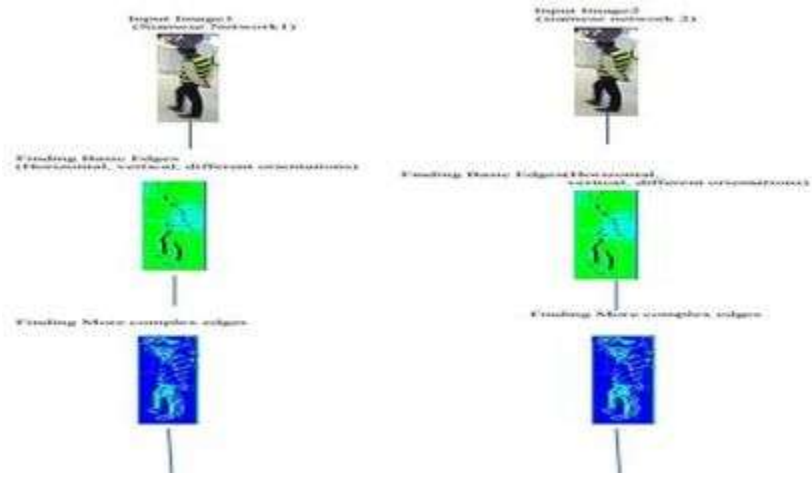

No. of Pages : 6 No. of Claims : 3

(12) PATENT APPLICATION PUBLICATION
(21) Application No.201911050078 A
(19) INDIA
(22) Date of filing of Application :05/12/2019
(43) Publication Date : 11/06/2021

(54) Title of the invention : CROWD COUNTING IN EMPORIUM USING CONVNETS

(51) International classification	:G08G0001040000, G06Q0030020000, G06T0007246000, H04N0007140000, G16H0010600000
(31) Priority Document No	:NA
(32) Priority Date	:NA
(33) Name of priority country	:NA
(86) International Application No	:NA
Filing Date	:NA
(87) International Publication No	: NA
(61) Patent of Addition to Application Number	:NA
Filing Date	:NA
(62) Divisional to Application Number	:NA
Filing Date	:NA

(71)**Name of Applicant :**
1)Sanjay Sinha
Address of Applicant :Star Tower, 610, 6th Floor, Sector 30, Gurugram, Haryana, India Haryana India
(72)**Name of Inventor :**
1)Seshadri Sastry Kunapuli
2)Praveen Chakravarthy
3)Upasana Singh
4)S Ravi Kumar
5)Kritika Thakur

(57) Abstract :
Count the number of person present in an emporium or retail store at a particular time using single camera.

No. of Pages : 8 No. of Claims : 4

(12) PATENT APPLICATION PUBLICATION
(19) INDIA
(22) Date of filing of Application :05/12/2019

(21) Application No.201911050079 A
(43) Publication Date : 11/06/2021

(54) Title of the invention : A VISUAL CONCENTRIC APPEARANCE APPROACH ON DESIGNING WEAPONS-NET • FOR DETECTING WEAPONS FOR UNIVERSAL CAMERAS

(51) International classification	:G06N0020000000, G06K0009000000, A01K0067027000, H04N0007180000, G09B0009000000	(71)**Name of Applicant :** **1)Sanjay Sinha** Address of Applicant :Star Tower, 610, 6th Floor, Sector 30, Gurugram, Haryana Haryana India
(31) Priority Document No	:NA	(72)**Name of Inventor :** **1)Seshadri Sastry Kunapuli**
(32) Priority Date	:NA	**2)Praveen Chakravarthy**
(33) Name of priority country	:NA	**3)Upasana Singh**
(86) International Application No	:NA	**4)S Ravi Kumar**
Filing Date	:NA	**5)Kritika Thakur**
(87) International Publication No	: NA	
(61) Patent of Addition to Application Number	:NA	
Filing Date	:NA	
(62) Divisional to Application Number	:NA	
Filing Date	:NA	

(57) Abstract :
1) Real time Automatic Weapon Detection model which can detect up to 20 categories of weapons even with low-resolution cameras under any illuminations. 2) Alarming the officials through Mail with a video in any public, private zones (e.g., Banks, Retail Stores etc,) 3) Utilization of Smart Cameras is not required. 4) Any official can visualize this video in the database even after months, if it™s required. 5) This Weapons-net • model is similar to the other Existing Deep Learning models such as Google Net • , MXNet • , and Alex Net • , which can be used by anyone for detecting any kind of weapons in the real time scenario (for any zone, it is not a camera based AI model). 6) No human Intervention is required to continuously monitor the cameras

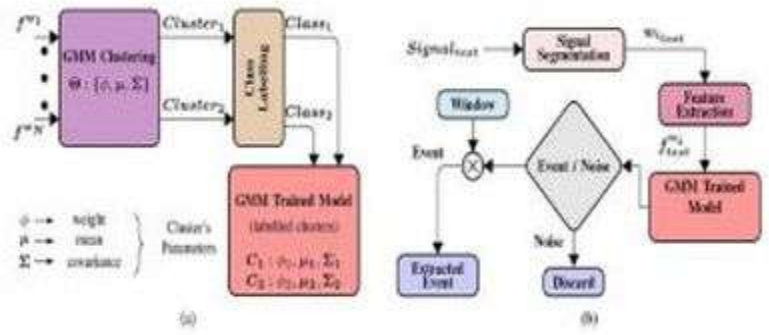

Figure 2

No. of Pages : 4 No. of Claims : 2

(12) PATENT APPLICATION PUBLICATION
(21) Application No.201911050201 A
(19) INDIA
(22) Date of filing of Application :05/12/2019
(43) Publication Date : 11/06/2021

(54) Title of the invention : VEHICLE

(51) International classification	:E02F0003320000, B60K0006480000, B62J0035000000, B60K0015063000, E02F0009080000	(71)**Name of Applicant :** **1)Hero MotoCorp Limited** Address of Applicant :The Grand Plaza, Plot No.2, Nelson Mandela Road, Vasant Kunj- Phase II, New Delhi Delhi Delhi India
(31) Priority Document No	:NA	(72)**Name of Inventor :**
(32) Priority Date	:NA	**1)AHMED, Hejaz**
(33) Name of priority country	:NA	**2)KOTHARI, Manish**
(86) International Application No	:NA	
Filing Date	:NA	
(87) International Publication No	: NA	
(61) Patent of Addition to Application Number	:NA	
Filing Date	:NA	
(62) Divisional to Application Number	:NA	
Filing Date	:NA	

(57) Abstract :
An electrical component protection system is disclosed. The vehicle (100) comprising a frame (300), an engine (9) and a cover member (200) mounted on the frame (300). The fuel tank (13) mounted above the engine (9). The electrical component (250) disposed above the engine (9) and under the fuel tank (13). The electrical component (250) comprises a plurality of potting portions (240, 242, 244, 246). Restricting the access of the potting portions (240, 242, 244, 246) of the electrical component (250) via the cover member (200).

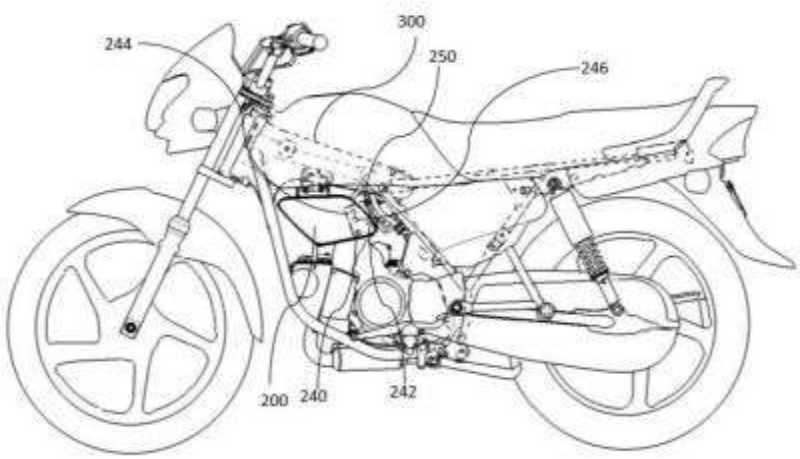

No. of Pages : 16 No. of Claims : 3

(12) PATENT APPLICATION PUBLICATION
(19) INDIA
(22) Date of filing of Application :05/12/2019

(21) Application No.201911050202 A
(43) Publication Date : 11/06/2021

(54) Title of the invention : EXHAUST SYSTEM

(51) International classification	:F01N0013080000, B60K0013040000, F01N0013180000, F01N0013000000, F01N0003021000	(71)**Name of Applicant :** **1)Hero MotoCorp Limited** Address of Applicant :The Grand Plaza, Plot No.2, Nelson Mandela Road, Vasant Kunj- Phase -II, New Delhi Delhi India
(31) Priority Document No	:NA	(72)**Name of Inventor :** **1)MISHRA, Abhishek** **2)DUBEY, Shubham**
(32) Priority Date	:NA	
(33) Name of priority country	:NA	
(86) International Application No	:NA	
Filing Date	:NA	
(87) International Publication No	: NA	
(61) Patent of Addition to Application Number	:NA	
Filing Date	:NA	
(62) Divisional to Application Number	:NA	
Filing Date	:NA	

(57) Abstract :
In one aspect of the present invention, a vehicle (100) is provided. The vehicle (100) comprising a frame (200); an internal combustion engine (300) swingably mounted to the frame (200) through the engine mounting system (400); an engine cooling fan unit (316) mounted to the internal combustion engine (300); and an exhaust system (500) mounted on the frame (200). The exhaust system (500) comprising: an exhaust pipe (301) comprising a first bent portion (302), a second bent portion (303), and a tail pipe (330), a second exhaust gas purification device (304a) positioned on a downstream end of the tail pipe (330), a muffler device (307) connected to the second exhaust gas purification device (304a). The second exhaust gas purification device (304a). The tail pipe (330) is positioned at a predetermined distance below the engine cooling fan unit (316).

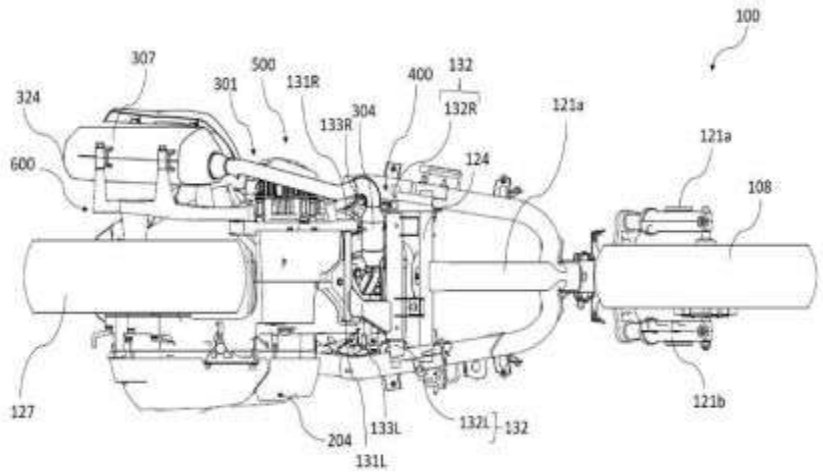

No. of Pages : 30 No. of Claims : 8

(12) PATENT APPLICATION PUBLICATION
(19) INDIA
(22) Date of filing of Application :05/12/2019

(21) Application No.201911050232 A
(43) Publication Date : 11/06/2021

(54) Title of the invention : AMINES AND ENERGETIC SALTS OF NITRATED PYRROLES

(51) International classification	:C07D0207340000, C07D0471040000, G01N0033520000, C40B0060140000, C07D0207333000
(31) Priority Document No	:NA
(32) Priority Date	:NA
(33) Name of priority country	:NA
(86) International Application No	:NA
Filing Date	:NA
(87) International Publication No	: NA
(61) Patent of Addition to Application Number	:NA
Filing Date	:NA
(62) Divisional to Application Number	:NA
Filing Date	:NA

(71)**Name of Applicant :**
1)CHAIRMAN, DEFENCE RESEARCH & DEVELOPMENT ORGANISATION
Address of Applicant :Ministry Of Defence, Govt. Of India, Room No 348, B-Wing, DRDO Bhawan, Rajaji Marg, New Delhi 110011, India Delhi India
2)ACRHEM, HYDERABAD
(72)**Name of Inventor :**
1)THALTIRI, Vikranth
2)CHAVVA, Kurumurthy
3)PANDA, Pradeepta Kumar

(57) Abstract :
The present invention describes a simple and efficient process for the synthesis novel nitrated pyrrole based high energy density materials (HEDMs) of Formula III-VI and is scalable. The process involves the use of simple and commercially readily available cheap reagents in good yields. The process comprises synthesizing nitrated pyrroles in four steps to obtain the new energetic compounds. Nitrated pyrrole salts (Formula III) are prepared by treating the nitrated pyrroles with appropriate base. The N-amino nitrated pyrroles (Formula IV) are synthesized by treating the above salts with common aminating agents. These N-amino compounds is converted to the corresponding nitramines (Formula V) by treating with a nitrating agent and subsequently, converted to stable energetic salts (Formula VI) upon treatment with corresponding sulfate or chloride salts of desired cations.

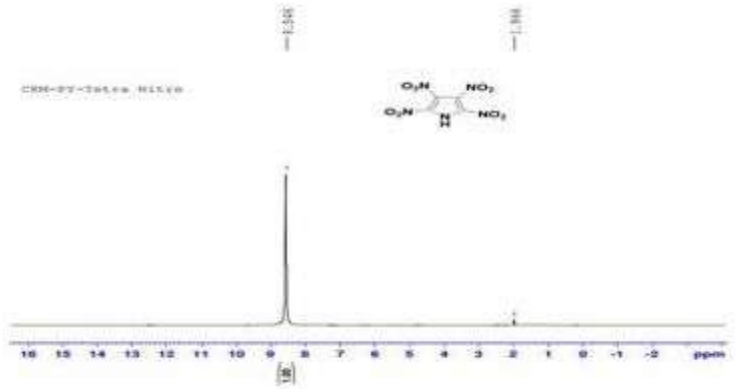

Figure 1: ^{1}H NMR spectrum of 2,3,4,5-tetranitropyrrole (II) in acetonitrile-d_3.

No. of Pages : 44 No. of Claims : 15

(12) PATENT APPLICATION PUBLICATION
(19) INDIA
(22) Date of filing of Application :05/12/2019
(21) Application No.201911050239 A
(43) Publication Date : 11/06/2021

(54) Title of the invention : ASSEMBLAGE MERRIMENT APPARATUS AND METHOD OF OPERATION THEREOF

(51) International classification	:A63F0003000000, G06F0016335000, G06T0011600000, G06F0013400000, G06F0021330000	(71)**Name of Applicant :** **1)EDGAMES SERVICES PRIVATE LIMITED** Address of Applicant :108, Dream Building, Technology Business Incubator, University of Delhi, New Delhi-110007, India Delhi India
(31) Priority Document No	:NA	(72)**Name of Inventor :**
(32) Priority Date	:NA	**1)ANAND, Atul**
(33) Name of priority country	:NA	
(86) International Application No	:NA	
Filing Date	:NA	
(87) International Publication No	: NA	
(61) Patent of Addition to Application Number	:NA	
Filing Date	:NA	
(62) Divisional to Application Number	:NA	
Filing Date	:NA	

(57) Abstract :
The present invention discloses a standalone educational merriment apparatus that is easily operated by beginners, young children and adolescents, and is cost effective. The assemblage merriment apparatus comprises a spinner device, a hardboard, plurality of tokens, plurality of items, plurality of cards, and plurality of movable devices. The plurality of tokens is used to transact the plurality of items, which helps in inculcating users about assemblage. The present invention also discloses a method of operation of the assemblage merriment apparatus.

No. of Pages : 8 No. of Claims : 5

(12) PATENT APPLICATION PUBLICATION
(19) INDIA
(22) Date of filing of Application :05/12/2019

(21) Application No.201911050240 A
(43) Publication Date : 11/06/2021

(54) Title of the invention : NOVEL COMPOUND 1,2,4,4-TETRANITROPYRAZOLIDINE-3,5-DIONE (ACRAJONE) AND PROCESS FOR ITS SYNTHESIS

(51) International classification	:C07F0017020000, G01N0033574000, C07K0016100000, G01N0009240000, C08B0037000000	(71)**Name of Applicant :** **1)CHAIRMAN, DEFENCE RESEARCH & DEVELOPMENT ORGANISATION** Address of Applicant :Ministry Of Defence, Govt. Of India, Room No 348, B-Wing, DRDO Bhawan, Rajaji Marg, New Delhi 110011, India Delhi India **2)ACRHEM, HYDERABAD**
(31) Priority Document No	:NA	
(32) Priority Date	:NA	
(33) Name of priority country	:NA	
(86) International Application No	:NA	
Filing Date	:NA	
(87) International Publication No	: NA	
(61) Patent of Addition to Application Number	:NA	
Filing Date	:NA	
(62) Divisional to Application Number	:NA	
Filing Date	:NA	

(72)**Name of Inventor :**
1)KOORELLA, Rajasekhar
2)NAYUDU, Raatalu
3)GUGULOTHU, Ramkoti

(57) Abstract :
The present invention relates to novel high energy density material 1,2,4,4-tetranitropyrazolidine-3,5-dione and process for synthesis of novel high energy material l,2,4,4-tetranitropyrazolidine-3,5-dione. More particularly, the present invention discloses the characterisation and synthesis of novel High energy density material l,2,4,4-tetranitropyrazolidine-3,5-dione which has been acronym as (ACRAJONE).

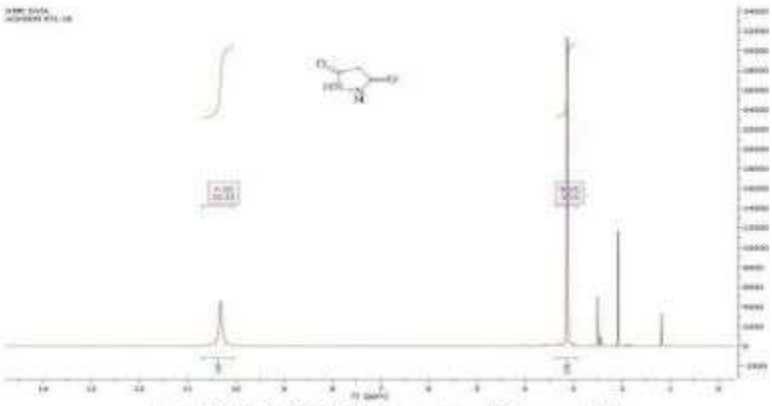

Fig 1. ^{1}HNMR (DMSO-D6) Spectrum of Compound III

No. of Pages : 26 No. of Claims : 5

(12) PATENT APPLICATION PUBLICATION
(19) INDIA
(22) Date of filing of Application :05/12/2019

(21) Application No.201911050241 A
(43) Publication Date : 11/06/2021

(54) Title of the invention : MARBLE MERRIMENT APPARATUS AND METHOD OF OPERATION THEREOF

(51) International classification	:H04L0029060000, H04N0021472000, G06F0016780000, G06F0003038000, H04W0072000000	(71)**Name of Applicant :** **1)EDGAMES SERVICES PRIVATE LIMITED** Address of Applicant :108, Dream Building, Technology Business Incubator, University of Delhi, New Delhi-110007, India Delhi India
(31) Priority Document No	:NA	(72)**Name of Inventor :**
(32) Priority Date	:NA	**1)ANAND, Atul**
(33) Name of priority country	:NA	
(86) International Application No	:NA	
Filing Date	:NA	
(87) International Publication No	: NA	
(61) Patent of Addition to Application Number	:NA	
Filing Date	:NA	
(62) Divisional to Application Number	:NA	
Filing Date	:NA	

(57) Abstract :
The present invention discloses a standalone marble merriment apparatus that is easily operated by users without intervention and easily operated by beginners and young children. The merriment apparatus that comprises a spinning handboard with a pointer capable of being rotated in clockwise or anti-clockwise manner by the user. The handboard indicates available action conditions. A tray that is sectioned to receive triggering cards and objects. The user initiates the spinning of the pointer in either clockwise or anti-clockwise direction on reaching a stoppage an action condition pointed by the pointer and indicated on the handboard is engaged and the indicated objects are collected by the user. A comparison of the collected objects is done with the triggering card. Meeting the triggering card condition the collected objects form the users tray are returned and the card is acquired by the user.

No. of Pages : 9 No. of Claims : 7

(12) PATENT APPLICATION PUBLICATION
(19) INDIA
(22) Date of filing of Application :05/12/2019
(21) Application No.201911050242 A
(43) Publication Date : 11/06/2021

(54) Title of the invention : EXTRACTION MERRIMENT APPARATUS AND METHOD OF OPERATION THEREOF

(51) International classification	:A63F0003000000, A63F0011000000, G09F0005040000, A63F0001040000, A47F0005100000	(71)**Name of Applicant :** **1)EDGAMES SERVICES PRIVATE LIMITED** Address of Applicant :108, Dream Building, Technology Business Incubator, University of Delhi, New Delhi-110007, India Delhi India
(31) Priority Document No	:NA	(72)**Name of Inventor :**
(32) Priority Date	:NA	**1)ANAND, Atul**
(33) Name of priority country	:NA	
(86) International Application No	:NA	
Filing Date	:NA	
(87) International Publication No	: NA	
(61) Patent of Addition to Application Number	:NA	
Filing Date	:NA	
(62) Divisional to Application Number	:NA	
Filing Date	:NA	

(57) Abstract :
An extraction merriment apparatus as per the present invention comprises a spinner, a plurality of boards, a plurality of cards, a plurality of blocking element, and a plurality of pattern-shaped elements. The extraction merriment apparatus is operated by selecting a board out of the plurality of design boards and further, choosing and distribution of five cards from the plurality of cards, depending on the level, to each user. The spinning of the spinner makes the spinner point towards a particular shape from a plurality of shapes displayed on the spinning device. Further, identification of a similar pattern to extract thereof, and blocking the same to indicate the extracted shape. The same helps in reproducing the pattern on the cards of the users.

No. of Pages : 8 No. of Claims : 5

(12) PATENT APPLICATION PUBLICATION
(19) INDIA
(22) Date of filing of Application :05/12/2019

(21) Application No.201911050245 A
(43) Publication Date : 11/06/2021

(54) Title of the invention : COLLATION MERRIMENT APPARATUS AND METHOD OF OPERATION THEREOF

(51) International classification	:G07F0017320000, G06K0009460000, F21V0023060000, G06K0009480000, A63F0001040000	(71)**Name of Applicant :** **1)EDGAMES SERVICES PRIVATE LIMITED** Address of Applicant :108, Dream Building, Technology Business Incubator, University of Delhi, New Delhi- 110007, India Delhi India
(31) Priority Document No	:NA	(72)**Name of Inventor :**
(32) Priority Date	:NA	**1)ANAND, Atul**
(33) Name of priority country	:NA	
(86) International Application No	:NA	
Filing Date	:NA	
(87) International Publication No	: NA	
(61) Patent of Addition to Application Number	:NA	
Filing Date	:NA	
(62) Divisional to Application Number	:NA	
Filing Date	:NA	

(57) Abstract :
The present invention discloses a standalone educational merriment apparatus that is easily operated by beginners, young children and adolescents, and is cost effective. The assemblage merriment apparatus comprises a spinner device mounted on a hardboard, plurality of skill cards, a plurality of pattern blocks or connectors and a grid or frame. The said plurality of skill cards are randomly distributed to the user to collate the pattern blocks or connectors on a grid or frame accordingly. The present invention also discloses a method of operation of the assemblage merriment apparatus.

No. of Pages : 7 No. of Claims : 5

(12) PATENT APPLICATION PUBLICATION
(19) INDIA
(22) Date of filing of Application :05/12/2019

(21) Application No.201911050257 A
(43) Publication Date : 11/06/2021

(54) Title of the invention : DEVICE FOR HOLDING A PASSENGER SEAT WITH VEHICLEBODY IN A VEHICLE

(51) International classification	:B60N0002360000, H01M0002100000, B64D0011060000, B60K0001040000, G06F0001180000	(71)**Name of Applicant :** **1)Daimler AG** Address of Applicant :70546 Stuttgart Germany Germany (72)**Name of Inventor :** **1)Ms. Balendra Shobika** **2)Mr. Balaji Pillai**
(31) Priority Document No	:NA	
(32) Priority Date	:NA	
(33) Name of priority country	:NA	
(86) International Application No	:NA	
Filing Date	:NA	
(87) International Publication No	: NA	
(61) Patent of Addition to Application Number	:NA	
Filing Date	:NA	
(62) Divisional to Application Number	:NA	
Filing Date	:NA	

(57) Abstract :
A device for holding a passenger seat of a vehicle with a body 204 of the vehicle is disclosed, comprising a left side lock 200 and a right side lock located on the body 204 of the vehicle to hold a seat wire 206 coupled to a backrest of the seat for holding the seat with the body 204. Each of the left side lock 200 and the right side lock includes a clip 210 having a protrusion that engages with the seat wire 206; and a slotted box shaped structure 214 around the clip 210. The slotted box shaped structure 214 comprises a rear wall 216 located opposite to the clip 210 with a space there between to accommodate the seat wire 206, and having projections 218 to support the seat wire 206, and a side wall 220 to provide additional support to the seat wire 206.

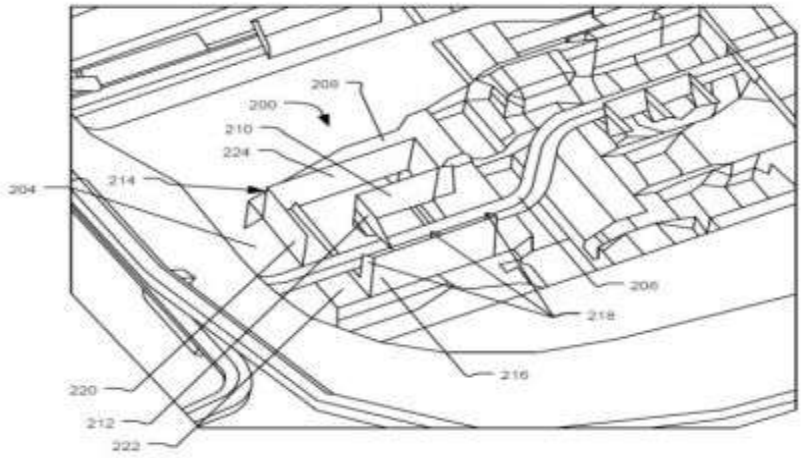

No. of Pages : 13 No. of Claims : 4

(12) PATENT APPLICATION PUBLICATION
(19) INDIA
(22) Date of filing of Application :05/12/2019

(21) Application No.201911050258 A
(43) Publication Date : 11/06/2021

(54) Title of the invention : ANTI-ROTATION DEVICE FOR EXHAUST TAIL PIPES USED IN VEHICLES

(51) International classification	:F01N0013080000, F23R0003420000, E21B0007060000, F23C0015000000, F02D0041020000	(71)**Name of Applicant :** **1)Daimler AG** Address of Applicant :70546 Stuttgart Germany Germany (72)**Name of Inventor :** **1)Mr. Karthik M P** **2)Mr. Dinesh Babu**
(31) Priority Document No	:NA	
(32) Priority Date	:NA	
(33) Name of priority country	:NA	
(86) International Application No	:NA	
Filing Date	:NA	
(87) International Publication No	: NA	
(61) Patent of Addition to Application Number	:NA	
Filing Date	:NA	
(62) Divisional to Application Number	:NA	
Filing Date	:NA	

(57) Abstract :
An anti-rotation device 100 for restricting rotational movement of a tail pipe 150 in vehicles is disclosed, having a first bracket 110 with a first end 112 fixed to an after-treatment system 140 and a second end 114 fixed to a first end 122 of a second bracket 120. The second bracket 120 has a C-shaped second end 124, which in combination with a C-clamp 130 envelops periphery of the tail pipe 150. The C-shaped second end 124 includes an aperture 126, which engages with an embossing 152 on periphery of the tail pipe 150 to orient the tail pipe 150 in a desired orientation and arrest rotation of the tail pipe 150.

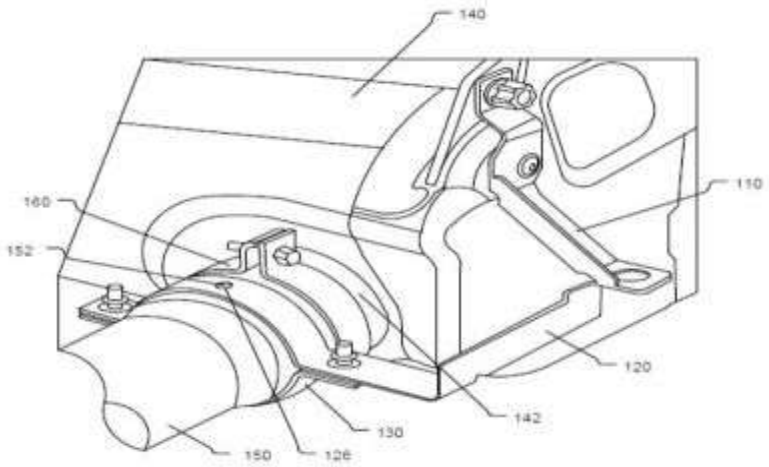

No. of Pages : 15 No. of Claims : 6

(12) PATENT APPLICATION PUBLICATION
(19) INDIA
(22) Date of filing of Application :05/12/2019

(21) Application No.201911050272 A
(43) Publication Date : 11/06/2021

(54) Title of the invention : METHOD AND SYSTEM FOR IMAGE-PROCESSING FOR ENHANCING IMAGE

(51) International classification	:A61B0006000000, H04N0021485000, G06F0021360000, G06F0016580000, H04W0072080000	(71)**Name of Applicant :** **1)Samsung Electronics Co., Ltd.** Address of Applicant :416 Maetan-Dong, Yeongtong-GU, Suwon-SI, Gyeonggi-do 442-742, Republic of Korea Republic of Korea
(31) Priority Document No	:NA	(72)**Name of Inventor :**
(32) Priority Date	:NA	**1)PANDITA, Ishan**
(33) Name of priority country	:NA	**2)SHUKLA, Vishwajeet**
(86) International Application No	:NA	**3)SINGOUR, Mayank**
Filing Date	:NA	
(87) International Publication No	: NA	
(61) Patent of Addition to Application Number	:NA	
Filing Date	:NA	
(62) Divisional to Application Number	:NA	
Filing Date	:NA	

(57) Abstract :
The present subject matter refers an image-processing method and system (200) for enhancing image. The method comprises generating an up-sampled image from a first image captured by a first device. Using a classification logic, at least one device configuration corresponding to the first device is obtained based on the first image. The device configuration is based on one or more standard features derived from the set of images corresponding to different device configurations. Further, the method comprises generating by an image generator one or more second image(s) specific to one or more second device(s) based on said up-sampled image and the obtained device configuration from said classification logic. The one or more second image correspond to high end images.

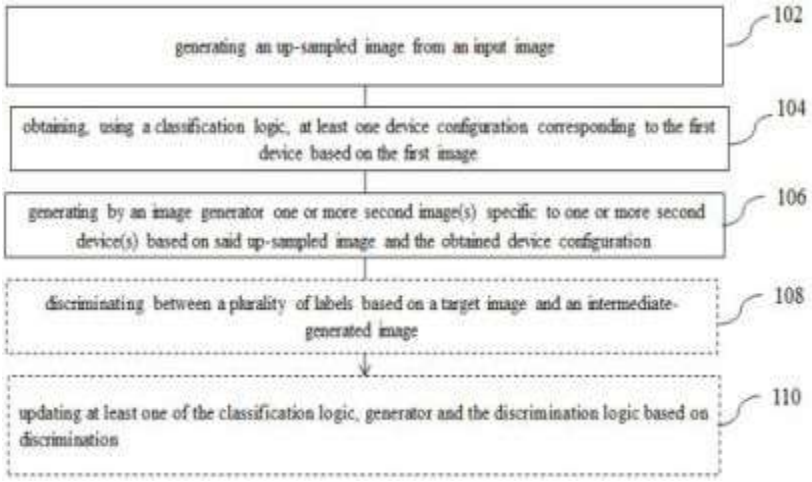

No. of Pages : 33 No. of Claims : 10

(12) PATENT APPLICATION PUBLICATION
(21) Application No.201911050309 A
(19) INDIA
(22) Date of filing of Application :05/12/2019
(43) Publication Date : 11/06/2021

(54) Title of the invention : VEGAN HONEY PRODUCTION DEVICE AND TRACING SYSTEM THEREFOR

(51) International classification	:G06F0011360000, A23C0020020000, H04N0021234700, A61K0035644000, A23L0021250000	(71)**Name of Applicant :** **1)Acharya Balkrishna** Address of Applicant :Divya Yog Mandir Trust, Kankhal, Haridwar- 249408, Uttarakhand, India. Uttarakhand India (72)**Name of Inventor :** **1)Acharya Balkrishna**
(31) Priority Document No	:NA	
(32) Priority Date	:NA	
(33) Name of priority country	:NA	
(86) International Application No	:NA	
Filing Date	:NA	
(87) International Publication No	: NA	
(61) Patent of Addition to Application Number	:NA	
Filing Date	:NA	
(62) Divisional to Application Number	:NA	
Filing Date	:NA	

(57) Abstract :
A vegan honey production device and tracing system therefor. The device comprises a bottom box 1 for fixing the beehive structure to the lower side. At least a brood frame 2 is disposed in the brood chamber / bottom box 1 for keeping bee, eggs, larvae, capped and pupa. A queen net 3 is placed above the brood chamber 1 such that to enable labour / worker bees to enter in a wooden tray 4, provided to accommodate brood frames therein. A wooden cover 5 is provided to cover the wooded tray 4 and a lid 6 is provided over the wooden cover 5 such that to maintain darkness and warmness to the wooden cover. Also a honey traceable system is provided to trace the origin and genuineness of the honey. (Fig. 1)

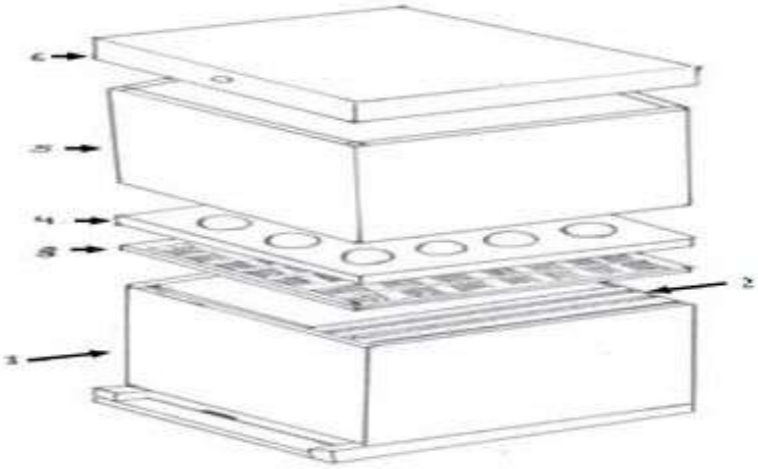

No. of Pages : 0 No. of Claims : 0

(12) PATENT APPLICATION PUBLICATION
(19) INDIA
(22) Date of filing of Application :06/12/2019

(21) Application No.201911050310 A
(43) Publication Date : 11/06/2021

(54) Title of the invention : GRASS BASED STRAW

(51) International classification	:B33Y0080000000, B08B0009043000, B08B0009000000, B01J0020300000, A61L0031140000	(71)**Name of Applicant :** **1)Rishabh Pratap Singh** Address of Applicant :Village Nagla Udi, Post Shakrauli, Distt- Etah, Uttar Pradesh Uttar Pradesh India (72)**Name of Inventor :** **1)Rishabh Pratap Singh**
(31) Priority Document No	:NA	
(32) Priority Date	:NA	
(33) Name of priority country	:NA	
(86) International Application No	:NA	
Filing Date	:NA	
(87) International Publication No	: NA	
(61) Patent of Addition to Application Number	:NA	
Filing Date	:NA	
(62) Divisional to Application Number	:NA	
Filing Date	:NA	

(57) Abstract :
The present disclosure relates to a method of manufacturing of a straw from a grass material, the method comprising: cleaning a raw grass base material; shaping the cleaned grass based material; inserting an iron rod inside of the to make a hollow tubular structure; cleaning the shaped grass based material; and washing the hollow tubular structure to produce the straw.

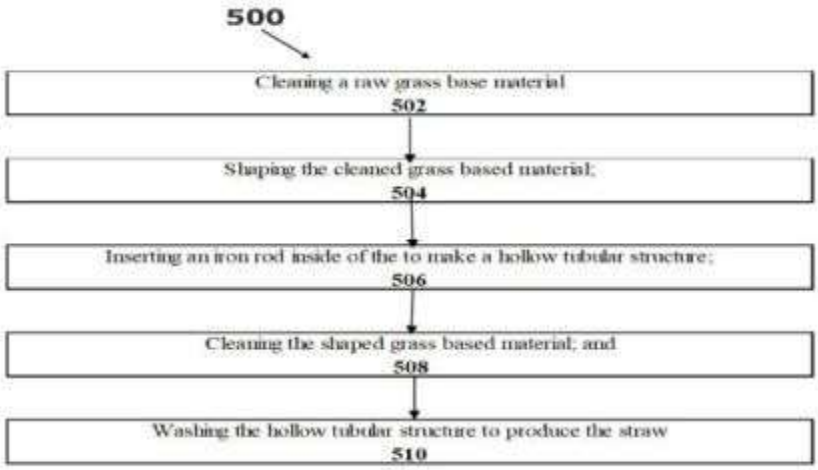

No. of Pages : 18 No. of Claims : 7

(12) PATENT APPLICATION PUBLICATION
(21) Application No.201911050338 A
(19) INDIA
(22) Date of filing of Application :06/12/2019
(43) Publication Date : 11/06/2021

(54) Title of the invention : COMPRESSION TESTING EQUIPMENT FOR CONICAL COIL TYPE OPEN HELICAL SPRING FITTED WITH BASE PLATE AND CONE AT TOP

(51) International classification	:F16F0001080000, F16F0001020000, H01L0021683000, B21F0003020000, E01F0009688000
(31) Priority Document No	:NA
(32) Priority Date	:NA
(33) Name of priority country	:NA
(86) International Application No	:NA
Filing Date	:NA
(87) International Publication No	: NA
(61) Patent of Addition to Application Number	:NA
Filing Date	:NA
(62) Divisional to Application Number	:NA
Filing Date	:NA

(71)**Name of Applicant :**
1)ORDNANCE PARACHUTE FACTORY
Address of Applicant :NAPIER ROAD, CANTT. KANPUR UTTAR PRADESH-208004, INDIA Uttar Pradesh India
(72)**Name of Inventor :**
1)ANKUR SINGH CHAUHAN
2)S. KONDAIYA
3)SHIVE CHANDRA

(57) Abstract :
Most of the springs commercially available are having coils of equal diameter open at bottoms & top and commercially available spring testing machines are suitable for testing these springs but the coil springs that are used in Brake Parachutes of Fighter Aircraft such as SU-30, MIG 21, LCA etc. have a conical shape i.e. the diameter of coil from base to top decreases giving it a conical shape and this special feature which make it different from other conical spring is that it is fitted with Base Plate and Cone at the top. Thats why these springs are required to be compressed in special attachment from outside. Present innovation compresses these type of spring as per requirement from outside and also it have provision to keep spring at centre of equipment without deflecting it from centre position. The spring can be kept compressed in this position for required specified time. The present innovation meets all the requirement of specification of spring and is robust to enable testing of springs in large quantities without causing any damage to springs.

No. of Pages : 11 No. of Claims : 8

(12) PATENT APPLICATION PUBLICATION
(19) INDIA
(22) Date of filing of Application :06/12/2019

(21) Application No.201911050374 A
(43) Publication Date : 11/06/2021

(54) Title of the invention : COLLECTION MERRIMENT APPARATUS AND METHOD OF OPERATION THEREOF

(51) International classification	:A63B0071060000, G06F0003048400, G06K0009480000, A63B0021060000, A63B0026000000	(71)**Name of Applicant :** **1)EDGAMES SERVICES PRIVATE LIMITED** Address of Applicant :108, Dream Building, Technology Business Incubator, University of Delhi, New Delhi- 110007, India Delhi India
(31) Priority Document No	:NA	(72)**Name of Inventor :**
(32) Priority Date	:NA	**1)ANAND, Atul**
(33) Name of priority country	:NA	
(86) International Application No	:NA	
Filing Date	:NA	
(87) International Publication No	: NA	
(61) Patent of Addition to Application Number	:NA	
Filing Date	:NA	
(62) Divisional to Application Number	:NA	
Filing Date	:NA	

(57) Abstract :
A collection merriment apparatus as per the present invention comprises a rolling device, a hardboard having patterns or shapes therein, and objects having the various shapes corresponding the shapes on the hardboard. The said apparatus operates by selection of a hardboard from a plurality of hardboards based on the level of difficulty, which proceed a user to choose a particular color counter from a plurality of counters, which forwardly enables a user to take turn to roll the rolling device one by one. Further, the rolling device would finalize the movement of the counter on the hardboard according to the points appearing on the rolling device. This enables the user to collect the shape corresponding to the object of the box on which the counter lands according to the points appearing on the rolling device and accumulate scores accordingly.

No. of Pages : 8 No. of Claims : 4

(12) PATENT APPLICATION PUBLICATION
(19) INDIA
(22) Date of filing of Application :06/12/2019

(21) Application No.201911050375 A
(43) Publication Date : 11/06/2021

(54) Title of the invention : SYMMETRY MERRIMENT APPARATUS AND METHOD OF OPERATION THEREOF

(51) International classification	:H02J0003380000, B41M0001120000, G06F0017500000, H02M0005400000, G06F0003048800	(71)**Name of Applicant :** **1)EDGAMES SERVICES PRIVATE LIMITED** Address of Applicant :108, Dream Building, Technology Business Incubator, University of Delhi, New Delhi-110007, India Delhi India
(31) Priority Document No	:NA	(72)**Name of Inventor :**
(32) Priority Date	:NA	**1)ANAND, Atul**
(33) Name of priority country	:NA	
(86) International Application No	:NA	
Filing Date	:NA	
(87) International Publication No	: NA	
(61) Patent of Addition to Application Number	:NA	
Filing Date	:NA	
(62) Divisional to Application Number	:NA	
Filing Date	:NA	

(57) Abstract :
The present invention discloses a symmetry merriment apparatus having a design board with an incomplete image on which a stencil is aligned. The stencil is adopted to have a grid that is capable of receiving a number of symmetrical components. The symmetrical components are fixed in the placed location by the grid and guides the users so as to complete the image of the design board.

No. of Pages : 6 No. of Claims : 5

(12) PATENT APPLICATION PUBLICATION
(19) INDIA
(22) Date of filing of Application :06/12/2019

(21) Application No.201911050377 A
(43) Publication Date : 11/06/2021

(54) Title of the invention : PREDICTION MERRIMENT APPARATUS AND METHOD OF OPERATION THEREOF

(51) International classification	:G06F0012086400, A63F0009180000, G07F0007020000, G09F0005040000, A63F0011000000	(71)**Name of Applicant :** **1)EDGAMES SERVICES PRIVATE LIMITED** Address of Applicant :108, Dream Building, Technology Business Incubator, University of Delhi, New Delhi-110007, India Delhi India
(31) Priority Document No	:NA	(72)**Name of Inventor :**
(32) Priority Date	:NA	**1)ANAND, Atul**
(33) Name of priority country	:NA	
(86) International Application No	:NA	
Filing Date	:NA	
(87) International Publication No	: NA	
(61) Patent of Addition to Application Number	:NA	
Filing Date	:NA	
(62) Divisional to Application Number	:NA	
Filing Date	:NA	

(57) Abstract :
A prediction merriment apparatus as per the present invention comprises a spinner, a hardboard, a plurality of cards, plurality of charts, and plurality of items. The said merriment apparatus operates by picking of a card from plurality of cards, displaying numbers according to which the number of items are to be placed on the hardboard. Further, spinning of the spinner displays numbers, which additionally adds or remove the number of items. The apparatus drives by the way of a prediction by the users, of the numbers that would remain after completion of a pre-determined number of rounds, cycles or iterations, based on the number of items initially placed on the board.

No. of Pages : 7 No. of Claims : 4

(12) PATENT APPLICATION PUBLICATION
(19) INDIA
(22) Date of filing of Application :06/12/2019

(21) Application No.201911050382 A
(43) Publication Date : 11/06/2021

(54) Title of the invention : ARRANGEMENT MERRIMENT APPARATUS AND METHOD OF OPERATION THEREOF

(51) International classification	:A63F0003000000, A63F0009060000, A63F0003040000, A63F0011000000, G06K0007000000
(31) Priority Document No	:NA
(32) Priority Date	:NA
(33) Name of priority country	:NA
(86) International Application No	:NA
Filing Date	:NA
(87) International Publication No	: NA
(61) Patent of Addition to Application Number	:NA
Filing Date	:NA
(62) Divisional to Application Number	:NA
Filing Date	:NA

(71)**Name of Applicant :**
1)EDGAMES SERVICES PRIVATE LIMITED
Address of Applicant :108,Dream Building, Technology Business Incubator, University of Delhi Delhi India
(72)**Name of Inventor :**
1)ANAND, Atul

(57) Abstract :
The present invention discloses a standalone educational merriment apparatus that is easily operated by beginners, young children and adolescents, and is cost effective. The arrangement merriment apparatus comprises a pointer device, plurality of spinner devices, plurality of frames, plurality of objects or pieces and plurality of cards. The plurality of objects is arranged on the plurality of frames as per patterns embossed on the plurality of cards. The present invention also discloses a method of operation of the arrangement merriment apparatus.

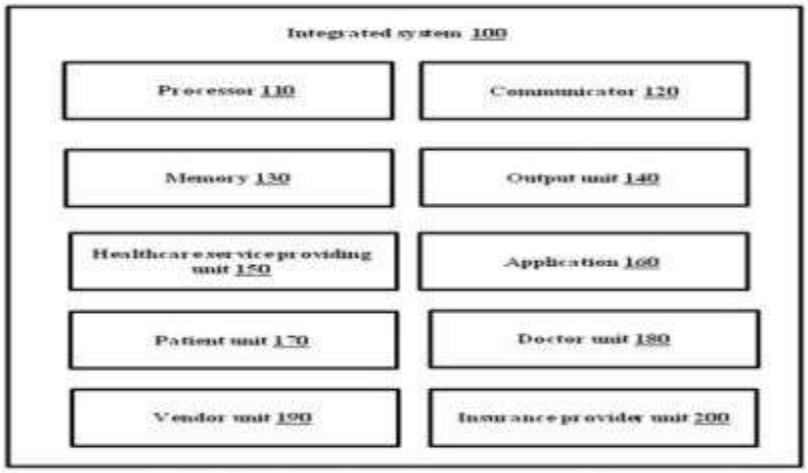

No. of Pages : 9 No. of Claims : 5

(12) PATENT APPLICATION PUBLICATION
(19) INDIA
(22) Date of filing of Application :06/12/2019

(21) Application No.201911050386 A
(43) Publication Date : 11/06/2021

(54) Title of the invention : BRIDGING MERRIMENT APPARATUS AND METHOD OF OPERATION THEREOF

(51) International classification	:H04L0012180000, G01D0013220000, A61B0005055000, G01C0009120000, H04W0004180000	(71)**Name of Applicant :** **1)EDGAMES SERVICES PRIVATE LIMITED** Address of Applicant :108, Dream Building, Technology Business Incubator, University of Delhi, New Delhi-110007, India Delhi India
(31) Priority Document No	:NA	(72)**Name of Inventor :**
(32) Priority Date	:NA	**1)ANAND, Atul**
(33) Name of priority country	:NA	
(86) International Application No	:NA	
Filing Date	:NA	
(87) International Publication No	: NA	
(61) Patent of Addition to Application Number	:NA	
Filing Date	:NA	
(62) Divisional to Application Number	:NA	
Filing Date	:NA	

(57) Abstract :
The present invention provides a bridging merriment apparatus that has a handboard with number of sections indicating bridging mechanism. A pointer mounted on the handboard that is capable of rotating in a clockwise or anti-clockwise direction. A trigger board indicating and also capable of receiving bridging mechanisms. A user initiates the rotation of the pointer on the handboard. On resting the pointer points to the available bridging mechanism that may be received by the trigger board. The applicable bridging mechanisms are connected on the trigger board until all the connections are satisfied.

No. of Pages : 7 No. of Claims : 4

(12) PATENT APPLICATION PUBLICATION
(21) Application No.201911050411 A
(19) INDIA
(22) Date of filing of Application :06/12/2019
(43) Publication Date : 11/06/2021

(54) Title of the invention : APPARATUS FOR SPREADING AN AGRICULTURAL MATERIAL

(51) International classification	:B32B0038000000, A45F0005000000, A01C0003060000, F16F0001160000, B02C0013282000	(71)**Name of Applicant :** **1)Chitkara Innovation Incubator Foundation** Address of Applicant :SCO: 160-161, Sector -9c, Madhya Marg, Chandigarh- 160009, India. Chandigarh India (72)**Name of Inventor :** **1)KADYAN, Virender** **2)KOUNDAL, Deepika**
(31) Priority Document No	:NA	
(32) Priority Date	:NA	
(33) Name of priority country	:NA	
(86) International Application No	:NA	
Filing Date	:NA	
(87) International Publication No	: NA	
(61) Patent of Addition to Application Number	:NA	
Filing Date	:NA	
(62) Divisional to Application Number	:NA	
Filing Date	:NA	

(57) Abstract :
According to an embodiment, the present disclosure provides an apparatus for spreading an agricultural material. The apparatus for spreading an agricultural material can include a support structure, a housing having a storage space to store the material, the housing can include an inlet opening to receive the material, and an outlet opening for outflow of the material from the housing, the housing fitted on the support structure such that a gap is created between the support structure and an outlet opening of the housing to allow outflow of the material, aslider plate slidably configured with the outlet opening of the housing. A rotor fitted on the support structure, wherein the rotor is configured such that a rotary part of the rotor is located in the gap for spreading the material coming out from the outlet opening through the gap.

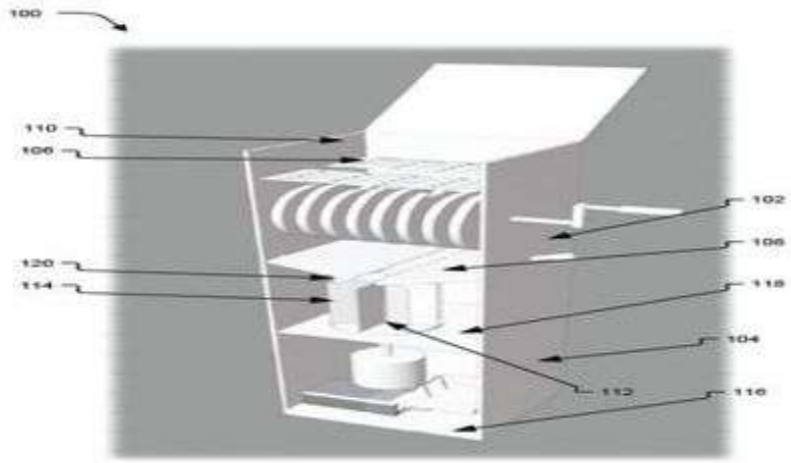

No. of Pages : 17 No. of Claims : 7

(12) PATENT APPLICATION PUBLICATION
(19) INDIA
(22) Date of filing of Application :06/12/2019

(21) Application No.201911050469 A
(43) Publication Date : 11/06/2021

(54) Title of the invention : PATTERNING MERRIMENT APPARATUS AND METHOD OF OPERATION THEREOF

(51) International classification	:H04M0017020000, A63F0003040000, H04N0021658000, G12B0011040000, B05B0001300000	(71)**Name of Applicant :** **1)EDGAMES SERVICES PRIVATE LIMITED** Address of Applicant :108 Dream Building, Technology Business Incubator, University of Delhi Delhi India (72)**Name of Inventor :** **1)ANAND, Atul**
(31) Priority Document No	:NA	
(32) Priority Date	:NA	
(33) Name of priority country	:NA	
(86) International Application No	:NA	
Filing Date	:NA	
(87) International Publication No	: NA	
(61) Patent of Addition to Application Number	:NA	
Filing Date	:NA	
(62) Divisional to Application Number	:NA	
Filing Date	:NA	

(57) Abstract :
The present invention discloses a standalone educational merriment apparatus that is easily operated by beginners, young children and adolescents, and is cost effective. The patterning merriment apparatus comprises a pointer device, a spinner device, a hardboard, plurality of symbol devices and a booklet. The plurality of symbol devices is arranged on the hardboard as per patterns embossed on the booklet. The present invention also discloses a method of operation of the assemblage merriment apparatus.

No. of Pages : 8 No. of Claims : 4

(12) PATENT APPLICATION PUBLICATION
(21) Application No.201911050470 A
(19) INDIA
(22) Date of filing of Application :06/12/2019
(43) Publication Date : 11/06/2021

(54) Title of the invention : COMPILING MERRIMENT APPARATUS AND METHOD OF OPERATION THEREOF

(51) International classification	:G06F0003048400, G06F0003048200, A63F0011000000, A63F0001000000, A63F0003000000	(71)**Name of Applicant :** **1)EDGAMES SERVICES PRIVATE LIMITED** Address of Applicant :108 Dream Building, Technology Business Incubator, University of Delhi New Delhi India Delhi India
(31) Priority Document No	:NA	(72)**Name of Inventor :**
(32) Priority Date	:NA	**1)ANAND, Atul**
(33) Name of priority country	:NA	
(86) International Application No	:NA	
Filing Date	:NA	
(87) International Publication No	: NA	
(61) Patent of Addition to Application Number	:NA	
Filing Date	:NA	
(62) Divisional to Application Number	:NA	
Filing Date	:NA	

(57) Abstract :
A compiling merriment apparatus as per the present invention comprises a spinner device on a hardboard, plurality of cards with various pictures thereon, plurality of connecting pieces for making the pictures depicted on the cards, plurality of non-standard measuring tools, and a hardboard base to place the cards. The said apparatus is operated by selecting a set or deck of cards depending on the level, which enables each user to have a single card each, which being enabled with a unique design, assists the user to assemble the same. Further, spinning of the spinner device displays number of connecting pieces to be collected.

No. of Pages : 7 No. of Claims : 4

(12) PATENT APPLICATION PUBLICATION
(19) INDIA
(22) Date of filing of Application :06/12/2019

(21) Application No.201911050506 A
(43) Publication Date : 11/06/2021

(54) Title of the invention : METHOD AND SYSTEM FOR MANAGING POWER CONSUMPTION IN A FLEXIBLE DISPLAY DEVICE

(51) International classification	:G06F0001160000, G06F0003041000, G06F0003010000, G06F0003048700, A61B0005155000	(71)**Name of Applicant :** **1)Samsung Electronics Co., Ltd.** Address of Applicant :416 Maetan-Dong, Yeongtong-GU, Suwon-SI, Gyeonggi-do 442-742, Republic of Korea Republic of Korea
(31) Priority Document No	:NA	(72)**Name of Inventor :**
(32) Priority Date	:NA	**1)SHARMA, Ankur**
(33) Name of priority country	:NA	**2)GUPTA, Atul**
(86) International Application No	:NA	**3)GUPTA, Sachin Kumar**
Filing Date	:NA	
(87) International Publication No	: NA	
(61) Patent of Addition to Application Number	:NA	
Filing Date	:NA	
(62) Divisional to Application Number	:NA	
Filing Date	:NA	

(57) Abstract :
A method (900) for managing power consumption in a flexible display device (104) is disclosed. The method (900) includes detecting bending of the flexible display device (104). The bending is indicative of an instruction to generate an auxiliary power. Further, the method (900) includes determining at least one value of a set of operational parameters associated with the bending of the flexible display device (104), based on the bending. The method (900) includes operating an alternate power source (112) to generate the auxiliary power to operate the flexible display device (104), based on the at least one value of the set of operational parameters. Further, the method (900) includes determining at least one application and at least one sub-function of the at least one application in the flexible display device (104) operable by using the auxiliary power.

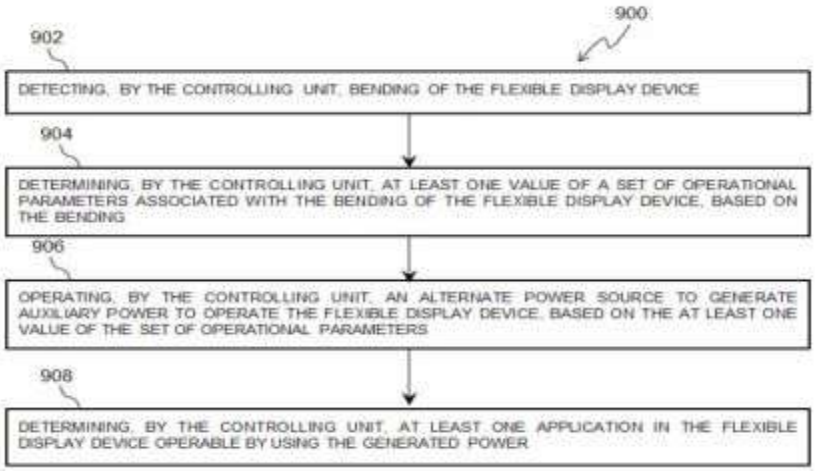

No. of Pages : 32 No. of Claims : 13

(12) PATENT APPLICATION PUBLICATION
(19) INDIA
(22) Date of filing of Application :06/12/2019

(21) Application No.201911050507 A
(43) Publication Date : 11/06/2021

(54) Title of the invention : NON-REMOVABLE PULL OUT ISOFIX COVER

(51) International classification	:B60N0002280000, G01B0003100000, B64C0001060000, B04B0007020000, E06B0009326000	(71)**Name of Applicant :** **1)Daimler AG** Address of Applicant :70546 Stuttgart Germany Germany (72)**Name of Inventor :** **1)Ms. Renuka Munnale**
(31) Priority Document No	:NA	
(32) Priority Date	:NA	
(33) Name of priority country	:NA	
(86) International Application No	:NA	
Filing Date	:NA	
(87) International Publication No	: NA	
(61) Patent of Addition to Application Number	:NA	
Filing Date	:NA	
(62) Divisional to Application Number	:NA	
Filing Date	:NA	

(57) Abstract :
A non-removable pull out Isofix cover assembly 100 is disclosed having an upper cover 110 and a cover housing 130. The upper cover 110 has an elongate member 124 disposed along a back face on a top portion of the upper cover 110, and a pull slot disposed on a bottom portion. The elongate member 124 includes a retraction spring 122 and a lock 126. The cover housing 130 includes an axial bore that receives and retains the elongate member along with the retraction spring 122 and the lock 126, and allow the upper cover 110 to be pulled away from the cover housing 130 and rotated about an axis of the elongate member. Pulling and rotating the upper cover (110) exposes a child restraint-seat holder housed within the cover housing (130) for removably attaching a mating member of a child restraint-seat with the child restraint-seat holder.

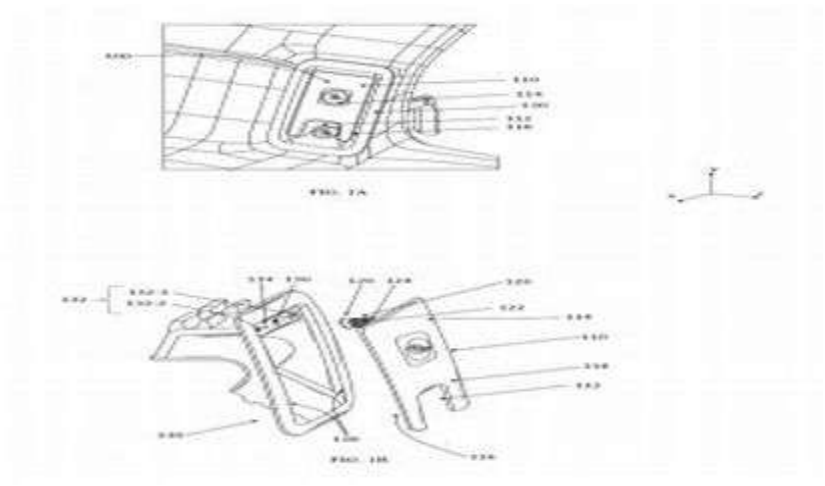

No. of Pages : 15 No. of Claims : 9

(12) PATENT APPLICATION PUBLICATION
(19) INDIA
(22) Date of filing of Application :06/12/2019
(21) Application No.201911050508 A
(43) Publication Date : 11/06/2021

(54) Title of the invention : COOLING PLATE DESIGN FOR ENHANCED BATTERY PERFORMANCE IN ELECTRIC VEHICLES

(51) International classification	:H01M0010613000, H01M0010625000, H01M0010647000, H01M0002100000, H01M0010655600	(71)**Name of Applicant :** **1)Daimler AG** Address of Applicant :70546, Stuttgart, Germany. Germany (72)**Name of Inventor :** **1)Mr. Prithviraj Pochampalli**
(31) Priority Document No	:NA	
(32) Priority Date	:NA	
(33) Name of priority country	:NA	
(86) International Application No	:NA	
Filing Date	:NA	
(87) International Publication No	: NA	
(61) Patent of Addition to Application Number	:NA	
Filing Date	:NA	
(62) Divisional to Application Number	:NA	
Filing Date	:NA	

(57) Abstract :
A cooling plate assembly (100) for uniform cooling of battery module in electric vehicles is disclosed, having a bottom plate (110) in thermal contact with battery module, a middle plate (120) and a top plate (130) arranged in a stacked manner to create an onward passage (150) for flow of coolant between middle plate (120) and top plate (130), and a flow conduit (152) between bottom plate (110) and middle plate (120). An outlet (126) in fluidic communication with flow conduit (152) is coupled to middle plate (120) and is located coaxially within an inlet (136) coupled to top plate (130) in fluidic communication with onward passage (150). Inlet (136) and outlet (126) are located at center for the coolant to flow in centrosymmetric manner. Bleed-holes (129) are provided in high temperature zones to feed low temperature coolant directly to the high temperature zones to achieve uniform temperature. Flow guides (127) are provided to ensure uniform flow distribution in the flow conduit (152).

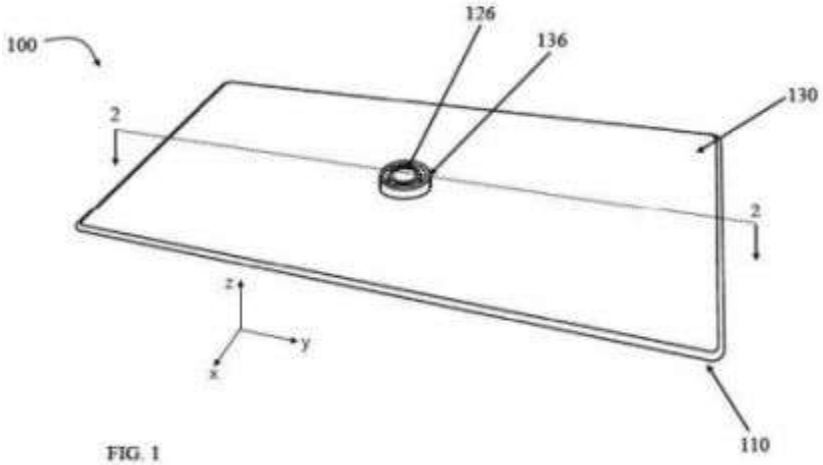

FIG. 1

No. of Pages : 28 No. of Claims : 10

(12) PATENT APPLICATION PUBLICATION
(21) Application No.201911050509 A
(19) INDIA
(22) Date of filing of Application :06/12/2019
(43) Publication Date : 11/06/2021

(54) Title of the invention : ROOF MOUNTED PROGRESSIVE AIRBAG SYSTEM

(51) International classification	:B60R0021231000, B60R0021000000, B60R0021214000, B60R0021207000, B60N0002427000	(71)**Name of Applicant :** **1)Daimler AG** Address of Applicant :70546 Stuttgart Germany Germany (72)**Name of Inventor :** **1)Mr. Nikhil Chaudhari** **2)Mr. Balaji Pillai** **3)Mr. Dusmanta Pattanaik** **4)Mr. Srikanth Shivalingaiah**
(31) Priority Document No	:NA	
(32) Priority Date	:NA	
(33) Name of priority country	:NA	
(86) International Application No	:NA	
Filing Date	:NA	
(87) International Publication No	: NA	
(61) Patent of Addition to Application Number	:NA	
Filing Date	:NA	
(62) Divisional to Application Number	:NA	
Filing Date	:NA	

(57) Abstract :
An improved airbag system 100 for a vehicle is disclosed, comprising inflators 102 mounted to roof rails 104 of a roof 106 of the vehicle; a roof airbag 108 disposed between the roof 106 and a headliner 110, and an ejection mechanism 114. The ejection mechanism 114 is configured to eject the roof airbag 108 from the headliner 110 towards downward direction to enclose an upper portion of an occupant on a seat of the vehicle and a backrest of the seat. The inflators are configured to fill pressurized gas in the roof airbag 108 to inflate the roof airbag 108 in deployed condition to protect the occupant during collision. A seat airbag is arranged in the backrest of the seat, which inflates after inflation of the roof airbag 108 to tighten the roof airbag 108 to restrain forward movement of the occupant relative to the seat.

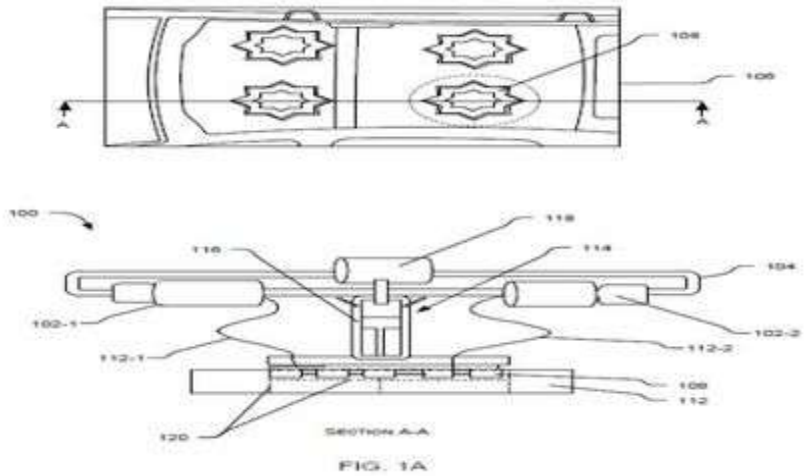

FIG. 1A

No. of Pages : 16 No. of Claims : 9

(12) PATENT APPLICATION PUBLICATION
(19) INDIA
(22) Date of filing of Application :06/12/2019

(21) Application No.201911050530 A
(43) Publication Date : 11/06/2021

(54) Title of the invention : PATH LOSS COMPENSATION IN MM WAVE 5G ANTENNA WITH 3D-PRINTED RADOME

(51) International classification	:G06F0001160000, H05K0005020000, E04B0001680000, B29C0065500000, H01Q0001240000	(71)**Name of Applicant :** **1)INDIAN INSTITUTE OF TECHNOLOGY DELHI** Address of Applicant :Hauz Khas, New Delhi-110016 Delhi India
(31) Priority Document No	:NA	(72)**Name of Inventor :** **1)Patrick Djan-Sampson**
(32) Priority Date	:NA	**2)Enno Ubben**
(33) Name of priority country	:NA	
(86) International Application No	:NA	
Filing Date	:NA	
(87) International Publication No	: NA	
(61) Patent of Addition to Application Number	:NA	
Filing Date	:NA	
(62) Divisional to Application Number	:NA	
Filing Date	:NA	

(57) Abstract :
An access point, comprising a first shell aligned along a horizontal plane for securing a first antenna and a second shell and a third shell placed at opposite ends of the first shell and oriented at 45 degree to the plane of the first shell for securing a second antenna and a third antenna, such that bottom sides of the second shell and the third shell face each other.

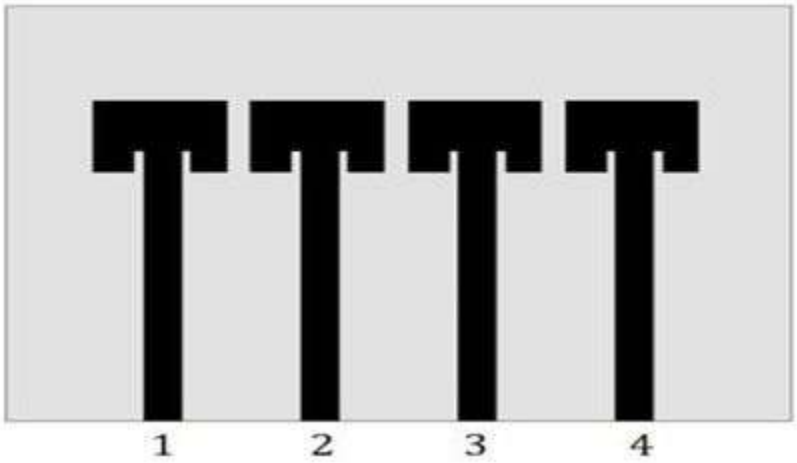

No. of Pages : 24 No. of Claims : 13

(12) PATENT APPLICATION PUBLICATION
(19) INDIA
(22) Date of filing of Application :06/12/2019
(21) Application No.201911050547 A
(43) Publication Date : 11/06/2021

(54) Title of the invention : SAFETY DEVICE FOR VEHICLE ACCELERATOR

(51) International classification	:B60K0026020000, F02D0011100000, B60K0028060000, A63F0013211000, B60W0010040000	(71)**Name of Applicant :** **1)WU, Wen-Yi** Address of Applicant :No. 558-1, Sec. 1, Jieshou Rd., Sanxia Dist., New Taipei City 237, TAIWAN (72)**Name of Inventor :** **1)WU, Wen-Yi**
(31) Priority Document No	:NA	
(32) Priority Date	:NA	
(33) Name of priority country	:NA	
(86) International Application No	:NA	
Filing Date	:NA	
(87) International Publication No	: NA	
(61) Patent of Addition to Application Number	:NA	
Filing Date	:NA	
(62) Divisional to Application Number	:NA	
Filing Date	:NA	

(57) Abstract :
The safety device for vehicle accelerator includes a control member. The control member includes a microprocessor, a first variable resistor, and a buzzer. The control member is electrically connected to a vehicles engine controller and acceleration pedal detector. When the acceleration pedal is suddenly depressed, the acceleration pedal detector sends a signal to the control member to engage the buzzer. The control member then converts and transmits the signal to the engine controller so that the engine controller reduces fuel injection, slows the vehicle down. The control member then turns off the buzzer.

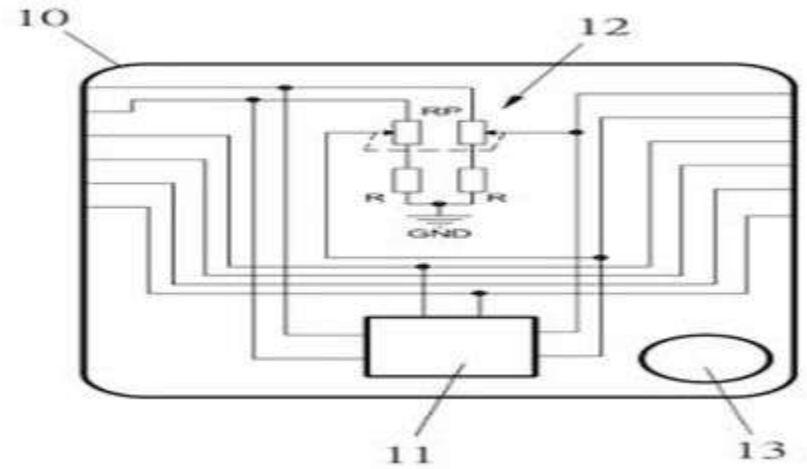

No. of Pages : 13 No. of Claims : 10

(12) PATENT APPLICATION PUBLICATION
(21) Application No.201911050644 A
(19) INDIA
(22) Date of filing of Application :08/12/2019
(43) Publication Date : 11/06/2021

(54) Title of the invention : SYSTEM AND METHOD FOR VIDEO EDITING

(51) International classification	:G11B0027034000, G11B0027340000, H04N0021422000, G11B0027031000, G06F0021320000	(71)**Name of Applicant :** **1)Chandigarh University** Address of Applicant :National Highway 95, Chandigarh-Ludhiana Highway, Mohali, Punjab - 140413, India. Punjab India
(31) Priority Document No	:NA	(72)**Name of Inventor :**
(32) Priority Date	:NA	**1)Mayur Nair**
(33) Name of priority country	:NA	**2)Prabhjeet Kaur**
(86) International Application No	:NA	**3)Aman Singh**
Filing Date	:NA	**4)Raghav Vasudeva**
(87) International Publication No	: NA	
(61) Patent of Addition to Application Number	:NA	
Filing Date	:NA	
(62) Divisional to Application Number	:NA	
Filing Date	:NA	

(57) Abstract :
The present invention relates to a system for video editing, comprising a camera 2 incorporated with the system for capturing of an image/video, wherein the image/video 5 is compressed 6 in a user interface 1, a cloud storage 3 for extracting 7 the compressed 6 image/video, the user interface 1 is used for rendering and compressing the extracted 7 image/video using a video time line 9, wherein upon rendering the user interface 1 downloads and compresses the image/video from the cloud storage unit 3. A method for video editing, comprising steps of capturing an image/video through a camera 2, feeding the image/video 5 in the user interface and uploading the compressed image/video in a cloud storage unit, extracting 7 the compressed image/video from the cloud storage unit, rendering and compressing of the extracted image/video by providing a time line, and downloading the compressed image/video from the cloud storage unit 3.

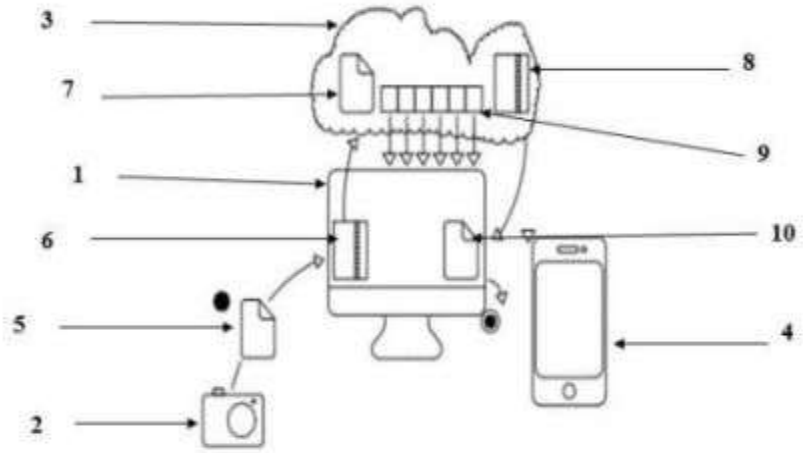

No. of Pages : 14 No. of Claims : 7

(12) PATENT APPLICATION PUBLICATION
(19) INDIA
(22) Date of filing of Application :08/12/2019

(21) Application No.201911050647 A
(43) Publication Date : 11/06/2021

(54) Title of the invention : SMART WALLET

(51) International classification	:G06Q0020320000, G06Q0020360000, A61L0009140000, B60L0003000000, G01R0031020000	(71)**Name of Applicant :** **1)Chandigarh University** Address of Applicant :National Highway 95, Chandigarh-Ludhiana Highway, Mohali, Punjab - 140413, India. Punjab India
(31) Priority Document No	:NA	(72)**Name of Inventor :** **1)Vikas Latiyal**
(32) Priority Date	:NA	**2)Aman Satya Dubey**
(33) Name of priority country	:NA	**3)Yogendra Narayan**
(86) International Application No	:NA	
Filing Date	:NA	
(87) International Publication No	: NA	
(61) Patent of Addition to Application Number	:NA	
Filing Date	:NA	
(62) Divisional to Application Number	:NA	
Filing Date	:NA	

(57) Abstract :
The present invention relates to a smart wallet, comprising of at least two sleeves with multiple of compartments for storing valuables like money, debit or credit card, a sensor installed in the wallet for detecting interaction of light during opening of the sleeves, a micro-controller installed in communication with the sensor to apprehend the signal and to generate a command signal, at least an illuminating unit interconnected with the micro-controller for getting activated upon receiving command signal from the micro-controller, a location determination unit coupled with a communication unit for sensing the location of the wallet and communicating the detected location to a user interface, a power supply unit installed in the wallet for providing electricity and a switch interlaced within the circuit for controlling the flow of electricity.

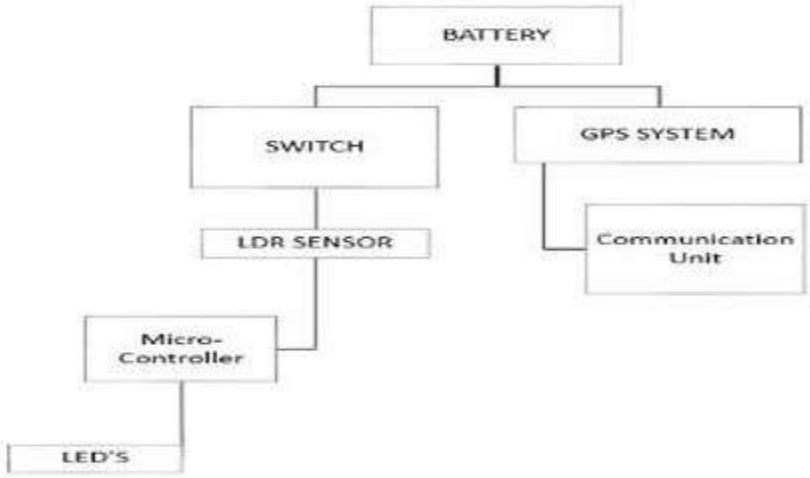

No. of Pages : 12 No. of Claims : 10

(12) PATENT APPLICATION PUBLICATION
(21) Application No.201911050648 A
(19) INDIA
(22) Date of filing of Application :08/12/2019
(43) Publication Date : 11/06/2021

(54) Title of the invention : AUTOMOBILE ACCIDENT DETECTION SYSTEM

(51) International classification	:G07C0005080000, B60R0016023000, G07C0005000000, F02D0041280000, B60R0021000000	(71)**Name of Applicant :** **1)Chandigarh University** Address of Applicant :National Highway 95, Chandigarh-Ludhiana Highway, Mohali, Punjab 140413, India. Punjab India (72)**Name of Inventor :** **1)Harsh Goyal**
(31) Priority Document No	:NA	
(32) Priority Date	:NA	
(33) Name of priority country	:NA	
(86) International Application No	:NA	
Filing Date	:NA	
(87) International Publication No	: NA	
(61) Patent of Addition to Application Number	:NA	
Filing Date	:NA	
(62) Divisional to Application Number	:NA	
Filing Date	:NA	

(57) Abstract :
The present invention relates to an automobile detection system, comprising a sensor mounted on an on-board chip for generating a relative voltage signal upon sensing damping force at the time of an accident of the automobile, a digital meter scanner associated with the on-board chip for scanning details of a driver in order to unlock the automobile, a control unit interlinked with the sensor and digital meter for generating a command signal upon receiving the voltage signal from the sensor and the details of the driver and a communication unit installed in continuation with the control unit for receiving and transmitting the command signal to nearby medical centres and police stations for providing assistance to the driver during an accident.

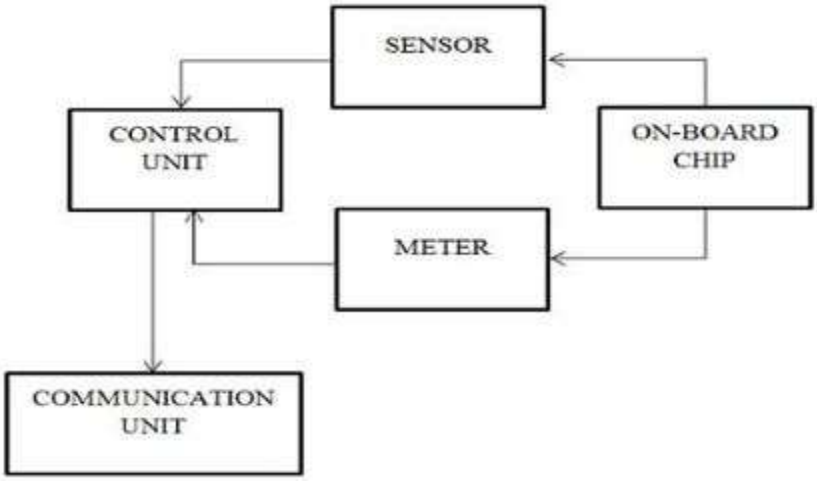

No. of Pages : 11 No. of Claims : 8

(12) PATENT APPLICATION PUBLICATION
(21) Application No.201911050649 A
(19) INDIA
(22) Date of filing of Application :08/12/2019
(43) Publication Date : 11/06/2021

(54) Title of the invention : AIRFOIL DEVICE FOR VEHICLES

(51) International classification	:B60H0001320000, H02M0001380000, B01J0029076000, B64C0003140000, F15D0001120000	(71)**Name of Applicant :** **1)Chandigarh University** Address of Applicant :National Highway 95, Chandigarh-Ludhiana Highway, Mohali, Punjab - 140413, India. Punjab India
(31) Priority Document No	:NA	(72)**Name of Inventor :** **1)Aishwarya Dhara** **2)Pon Maa Kishan A**
(32) Priority Date	:NA	
(33) Name of priority country	:NA	
(86) International Application No	:NA	
Filing Date	:NA	
(87) International Publication No	: NA	
(61) Patent of Addition to Application Number	:NA	
Filing Date	:NA	
(62) Divisional to Application Number	:NA	
Filing Date	:NA	

(57) Abstract :
The present invention relates to an airfoil device for vehicle that is characterized by modified design comprising of, a first edge 1 and second edge 2 extended from a first point to second point lying on a chord, a first 4 and second 3 sidewall joined together at the first 1 and second 2 edges, the first edge 1 includes a stagnation region of the airfoil device having a first curvature substantially equal to zero within the stagnation region, the first curvature associated with the first sidewall 4 of the airfoil device extending from the first point to second point and a second curvature associated with the second sidewall 3 of the airfoil device extending from the first point to second point. The airfoil device reduces the drag about 25%-35% and providing efficient vertical lift for about 3% increment in thickness thus operating efficiently in a Mach number greater than 5.

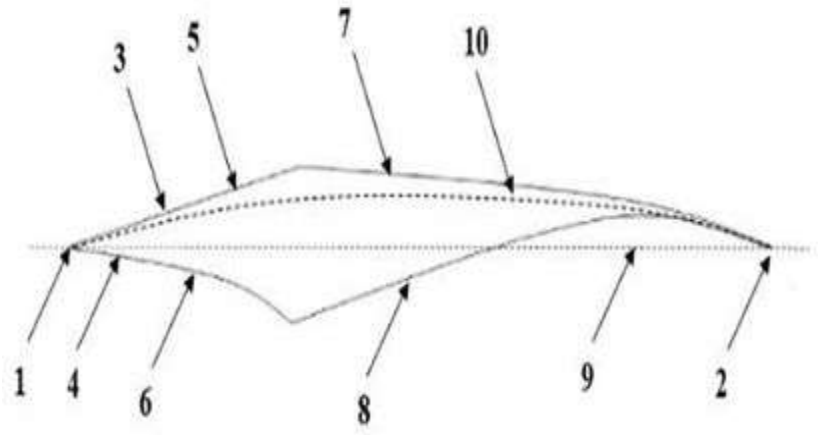

No. of Pages : 12 No. of Claims : 9

(12) PATENT APPLICATION PUBLICATION
(19) INDIA
(22) Date of filing of Application :08/12/2019

(21) Application No.201911050650 A
(43) Publication Date : 11/06/2021

(54) Title of the invention : LOCAL SHOPPING SYSTEM

(51) International classification	:G06Q0030060000, G06Q0040000000, F41G0007220000, F41G0007000000, G06Q0040020000	(71)**Name of Applicant :** **1)Chandigarh University** Address of Applicant :National Highway 95, Chandigarh-Ludhiana Highway, Mohali, Punjab - 140413, India. Punjab India
(31) Priority Document No	:NA	(72)**Name of Inventor :** **1)Arjun Saibo**
(32) Priority Date	:NA	
(33) Name of priority country	:NA	
(86) International Application No	:NA	
Filing Date	:NA	
(87) International Publication No	: NA	
(61) Patent of Addition to Application Number	:NA	
Filing Date	:NA	
(62) Divisional to Application Number	:NA	
Filing Date	:NA	

(57) Abstract :
The present invention relates to local shopping system, comprising a seller module installed in the system for enabling a seller to register and upload product information that he/she prefers to sell, a buyer module wirelessly linked to the seller module for visualizing product information in order to buy a product, a delivery module interlinked with the modules for providing a platform to work seekers that are registered on the delivery module and are selected for delivering purchased products from the seller to the buyer, a GPS connected to each of the modules for tracking location of the seller, buyer and work seekers and a control station interlinked with the modules and GPS that fetches the location of the seller, buyer and work seeker in order to allocate the delivery task to a work seeker who is present in the proximity of the seller and the buyer.

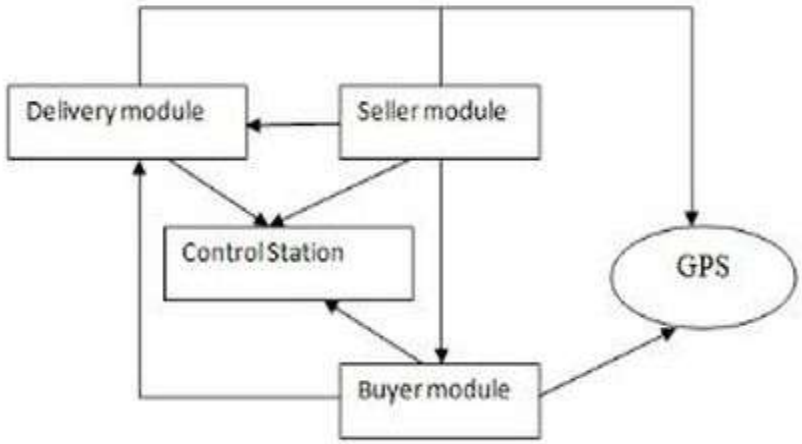

No. of Pages : 10 No. of Claims : 6

(12) PATENT APPLICATION PUBLICATION
(21) Application No.201911050833 A
(19) INDIA
(22) Date of filing of Application :09/12/2019
(43) Publication Date : 11/06/2021

(54) Title of the invention : A TOOL AND A METHOD FOR GRIPPING VEHICLE STRUCTURAL MEMBERS

(51) International classification	:A45F0005000000, F16M0011140000, B60R0013020000, G09F0021040000, B25J0015060000	(71)**Name of Applicant :** **1)Mahindra & Mahindra Limited.** Address of Applicant :Farm Equipment Sector, Swaraj Division, Phase IV, Industrial Area, S.A.S. Nagar (Mohali), Punjab, India Punjab India
(31) Priority Document No	:NA	(72)**Name of Inventor :**
(32) Priority Date	:NA	**1)Bob Vashist**
(33) Name of priority country	:NA	**2)Abhishek Wadhwa**
(86) International Application No	:NA	
Filing Date	:NA	
(87) International Publication No	: NA	
(61) Patent of Addition to Application Number	:NA	
Filing Date	:NA	
(62) Divisional to Application Number	:NA	
Filing Date	:NA	

(57) Abstract :
A tool and a method for gripping vehicle structural members. The tool 100 includes a first member 102 having a supporting arm 104 at first end 102a and a head portion 106 at second end 102b, said head portion 106 defines a bore 108a and a slot 108b, a second member 110 connected to said first member 102, said second member 110 defining a receiving pocket 112 at lower end 110a and an engageable portion 114 at upper end 110b, said engageable portion 114 includes a connecting member 116 adapted to slidably engage within said bore 108a, and a locking member 118 disposed between said first member 102 and said second member 110. The supporting arm 104 of said first member 102 and said receiving pocket 112 of said second member 110 are adapted to grip a first portion and a second portion of said vehicle structural members respectively.

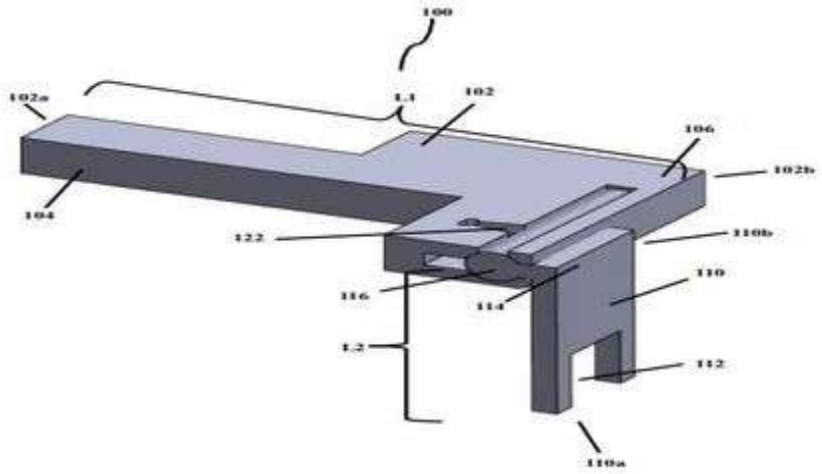

No. of Pages : 23 No. of Claims : 9

(12) PATENT APPLICATION PUBLICATION
(19) INDIA
(22) Date of filing of Application :10/12/2019

(21) Application No.201911050879 A
(43) Publication Date : 11/06/2021

(54) Title of the invention : ANTI-OBESITY EFFECT OF EXTRACTS PREPARED FROM FICUS BENGHALENSIS

(51) International classification	:A61K0036600000, A61K0036480000, A61K0036185000, A23L0033105000, A61K0008970000	(71)**Name of Applicant :** **1)SHOOLINI UNIVERSITY OF BIOTECHNOLOGY AND MANAGEMENT SCIENCES** Address of Applicant :VILLAGE- BHAJOL, P.O. SULTANPUR, SOLAN- 173229 (H.P) Himachal Pradesh India
(31) Priority Document No	:NA	(72)**Name of Inventor :**
(32) Priority Date	:NA	**1)AZHAR KHAN**
(33) Name of priority country	:NA	**2)KESHAV CHANDEL**
(86) International Application No	:NA	**3)HUMA KHAN**
Filing Date	:NA	**4)MUKUL KOLISH**
(87) International Publication No	: NA	
(61) Patent of Addition to Application Number	:NA	
Filing Date	:NA	
(62) Divisional to Application Number	:NA	
Filing Date	:NA	

(57) Abstract :
This invention relates to anti-obesity extracts prepared from ficus benghalensis. Ficus benghalensis, commonly known as banyan tree and belongs to the family of Moraceae and is an evergreen tree found all over India. Different parts of the plants are used in the treatment of various type of diseases mainly the diabetes. So present study has focused on its potential to improve blood glucose level and can prevent complications of type 2 diabetes mellitus. The in-vitro antioxidant and anti-diabetic properties of plant in two solvents has studied (methanol and distilled water) extracts of Ficus benghalensis leaves. Both the solvent extracts were analysed and contain different phytochemicals. The results showed that methanol was the suitable solvent for extraction of phytochemical as it has more free radical scavenging activity (64.13%). The phytochemical assay results showed the highest polyphenol content in methanol extract (0.56 mg GAE/g) and also flavonoids content in methanol extract (0.31 mg GAE/g). The in-vitro anti diabetic assay was done by in vitro enzymatic method (alpha-amylase inhibition assay) and glucose uptake assay. Ficus benghalensis methanolic extract showed minimum value of IC50 (IC50 = 0.221mg/ml) than its aqueous extracts (IC50 = 0.253 mg/ml). So Ficus benghalensis methanolic extract shows highest amylase inhibition activity than its aqueous extract Further, Ficus benghalensis aqueous extract inhibited the glucose uptake significantly than its methanolic extract when subjected to glucose inhibition assay through a dialysis membrane for 180 hours. Most importantly when in vitro assay was performed to check its antiobesitic nature, so the aqueous extract showed minimum value of IC50 (IC50 =0.229mg/ml) than its methanolic extracts (IC50 = 0.240mg/ml) which shows its potential for inhibiting lipase enzyme and could be a candidate to cure obesity.

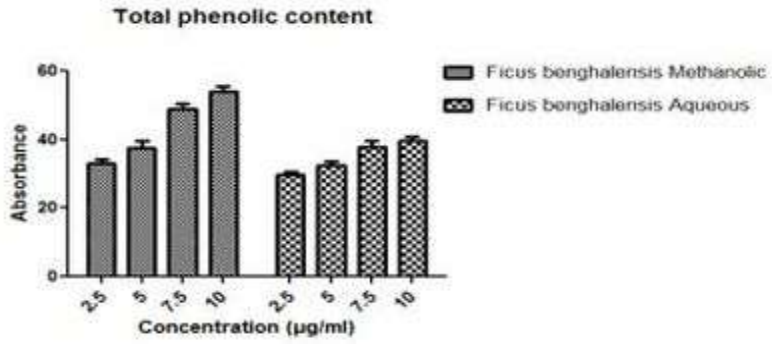

Fig 1: Total Phenolic Content

No. of Pages : 16 No. of Claims : 6

(12) PATENT APPLICATION PUBLICATION
(19) INDIA
(22) Date of filing of Application :10/12/2019
(21) Application No.201911050880 A
(43) Publication Date : 11/06/2021

(54) Title of the invention : AN INSILICO METHOD TO ANALYZE POLYPHENOLS FROM CRATAEGUS PINNATIFIDA AS AN ACE INHIBITOR

(51) International classification	:A61K0036734000, A61K0031353000, A61K0031401000, A61K0038550000, C07D0311620000
(31) Priority Document No	:NA
(32) Priority Date	:NA
(33) Name of priority country	:NA
(86) International Application No	:NA
Filing Date	:NA
(87) International Publication No	: NA
(61) Patent of Addition to Application Number	:NA
Filing Date	:NA
(62) Divisional to Application Number	:NA
Filing Date	:NA

(71)**Name of Applicant :**
1)SHOOLINI UNIVERSITY OF BIOTECHNOLOGY AND MANAGEMENT SCIENCES
Address of Applicant :VILLAGE- BHAJOL, P.O. SULTANPUR, SOLAN- 173229 (H.P) Himachal Pradesh India
(72)**Name of Inventor :**
1)AZHAR KHAN
2)HUMA KHAN
3)PRATIBHA SHARMA
4)SAURABH KULSHRESHTHA

(57) Abstract :
This invention relates to an insilico method to analyse polyphenols from crataegus pinnatifida as an ace inhibitor. Proanthocyanidin A2, Procyanidin B2, Procyanidin B4 and Procyanidin B5 compounds were reported from Crataegus pinnatifida fruit having potential antihypertensive inhibitory effect. However, the mechanism via which such compound exerts the effect in blood pressure regulation is still unclear. Therefore, present invention designed to target this compound on Renin angiotensin system a hormonal cascade which regulates the blood pressure. In silico protein-ligand docking of Proanthocyanidin A2, Procyanidin B2, Procyanidin B4 and Procyanidin B5 with angiotensin converting enzyme (both domain N and C) was carried out by autodock tool 1.5.6 and structure of the compounds were drawn by the Marvin sketch 17.21.0 software. The binding of the compounds to the active site of the entire drug target was observed by chimera 1.9. Proanthocyanidin A2, Procyanidin B2, Procyanidin B4 and Procyanidin B5 showed very low binding affinity with angiotensin converting enzyme and partially blocked the active sites of the enzyme. Proanthocyanidin A2, Procyanidin B2. Procyanidin B4 and Procyanidin B5 showed the -11.1kcal/mol, -10.8kcal/mol, -9.9kcal/mol and -11.3kcal/mol with angiotensin converting enzyme (C-domain) and these four compounds shown -10.6kcal/mol, -9.3kcal/mol, -10.5kcal/mol and -10.8kcal/mol with angiotensin converting enzyme (N-domain). Proanthocyanidin A2, Procyanidin B2, Procyanidin B4 and Procyanidin B5 compounds showed good binding energy with angiotensin converting enzyme which is more appropriate in comparison to Captopril (standard) -5.5kcal/mol and Enalapril (standard)-7.5kcal/mol. Findings of the present invention provide new perspective for the drug development against high blood pressure regulation and also showed that angiotensin converting enzyme is very potential drug target for hypertension.

No. of Pages : 24 No. of Claims : 6

(12) PATENT APPLICATION PUBLICATION
(19) INDIA
(22) Date of filing of Application :10/12/2019

(21) Application No.201911051001 A
(43) Publication Date : 11/06/2021

(54) Title of the invention : TREATMENT OF METHYLENE BLUE USING MULTIWALLED CARBON NANOTUBES

(51) International classification	:B82Y0030000000, A61B0006030000, C01B0032160000, B82Y0040000000, C01B0032174000	(71)**Name of Applicant :** **1)AMITY UNIVERSITY** Address of Applicant :AMITY UNIVERSITY CAMPUS, SECTOR-125 NOIDA UTTAR PRADESH-201313, INDIA Uttar Pradesh India
(31) Priority Document No	:NA	(72)**Name of Inventor :**
(32) Priority Date	:NA	**1)PREETI THAKUR**
(33) Name of priority country	:NA	**2)SHALINI BISHT**
(86) International Application No	:NA	**3)ATUL THAKUR**
Filing Date	:NA	
(87) International Publication No	: NA	
(61) Patent of Addition to Application Number	:NA	
Filing Date	:NA	
(62) Divisional to Application Number	:NA	
Filing Date	:NA	

(57) Abstract :
The present invention relates to a system and method of treatment of methylene blue using multiwalled carbon nanotubes. The present invention aims to evaluate the adsorption of MB using multi walled carbon nanotubes MWCNTs at different parameter.

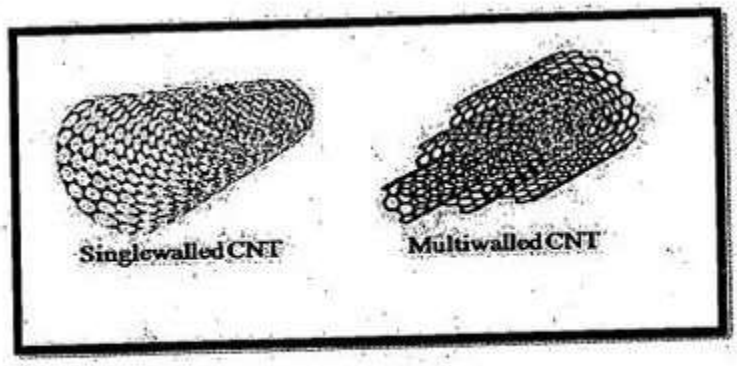

Fig 1

No. of Pages : 22 No. of Claims : 3

(12) PATENT APPLICATION PUBLICATION
(19) INDIA
(22) Date of filing of Application :10/12/2019
(21) Application No.201911051003 A
(43) Publication Date : 11/06/2021

(54) Title of the invention : A METHOD TO CULTURE AND IDENTIFY FUSARIUM SOLANI CAUSING STEM ROT AND WILT OF LUCKY BAMBOO (DRACAENA SANDERIANA)

(51) International classification	:A61Q0005020000, A45D0024300000, G01P0015180000, A61Q0005060000, A45D0024020000	(71)**Name of Applicant :** **1)AMITY UNIVERSITY** Address of Applicant :AMITY UNIVERSITY CAMPUS, SECTOR-125 NOIDA UTTAR PRADESH-201313, INDIA Uttar Pradesh India
(31) Priority Document No	:NA	(72)**Name of Inventor :**
(32) Priority Date	:NA	**1)NARENDRA KUMAR**
(33) Name of priority country	:NA	**2)S.M.PAUL KHURANA**
(86) International Application No	:NA	
Filing Date	:NA	
(87) International Publication No	: NA	
(61) Patent of Addition to Application Number	:NA	
Filing Date	:NA	
(62) Divisional to Application Number	:NA	
Filing Date	:NA	

(57) Abstract :
The present invention relates to a comb with variable teeth that houses three variable sets. Out of the three, two sets have same pitch of teeth while the one has a different pitch so as to house the other two sets. This proposed variable teeth comb serves different purposes to females as well as male users who prefer multiple combs for hair cleaning, untangling or styling.

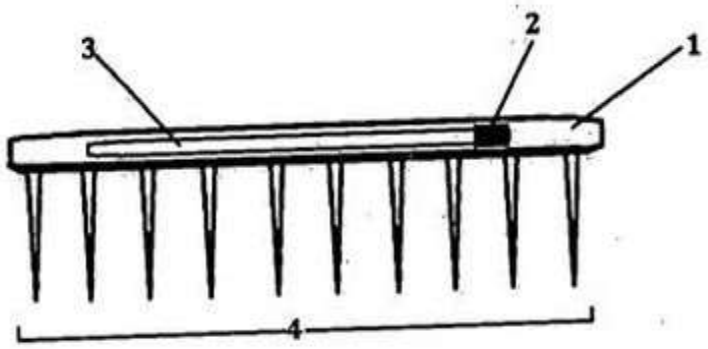

Fig 1

No. of Pages : 11 No. of Claims : 5

(12) PATENT APPLICATION PUBLICATION
(19) INDIA
(22) Date of filing of Application :10/12/2019

(21) Application No.201911051042 A
(43) Publication Date : 11/06/2021

(54) Title of the invention : POLY PHYTONATURAL FACIAL CLEANSER

(51) International classification	:A61Q0019100000, A61K0008020000, A61K0036258000, A47K0007030000, B01J0037030000	(71)**Name of Applicant :** **1)PROF. (DR.) N. V. SATHEESH MADHAV** Address of Applicant :FACULTY OF PHARMACY, DIT UNIVERSITY, MUSSORIE DIVERSION ROAD, DEHRADUN, UTTARAKHAND-248009, INDIA Uttarakhand India **2)MR. SIDDHARTH SINGH**
(31) Priority Document No	:NA	(72)**Name of Inventor :** **1)PROF. (DR.) N. V. SATHEESH MADHAV** **2)MR. SIDDHARTH SINGH**
(32) Priority Date	:NA	
(33) Name of priority country	:NA	
(86) International Application No	:NA	
Filing Date	:NA	
(87) International Publication No	: NA	
(61) Patent of Addition to Application Number	:NA	
Filing Date	:NA	
(62) Divisional to Application Number	:NA	
Filing Date	:NA	

(57) Abstract :
The current invention explores a method for preparing bio-natural cleanser concentrate dispersions comprising of various vital phytoprinciples which can serve as a natural cleansers. The concentrated cleanser solution was prepared by add mixing phytoprinciples like orange peel powder, coconut pulp, coconut water, sandalwood powder, etc. followed by optimized sonication cycles and incorporated with suitable co-formulating agent which in turned followed by preparing impregnated cleansing wipe with the dilute cleanser in appropriate quality and assist for its cleansing formulation. The poly phytonatural formulation FA2 showed a significance in-vitro cleansing property.

Drawings of the invention

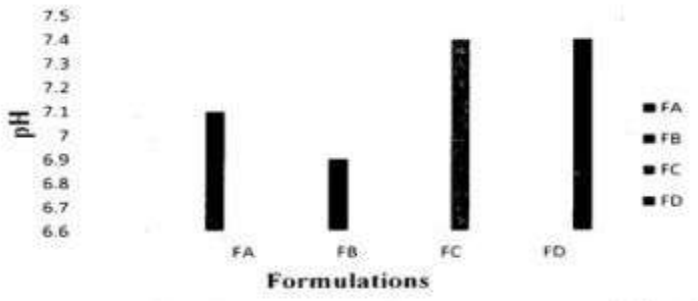

Figure 1 pH of poly phytonatural cleansing formulations

No. of Pages : 17 No. of Claims : 5

(12) PATENT APPLICATION PUBLICATION
(21) Application No.201911051047 A
(19) INDIA
(22) Date of filing of Application :10/12/2019
(43) Publication Date : 11/06/2021

(54) Title of the invention : SPLIT-BAFFLE FOR WIPER HEATING & SUPPRESSING RECIRCULATION ZONES

(51) International classification	:F25B0047020000, B60S0001540000, B60H0001340000, B60H0001240000, G09F0009300000	(71)**Name of Applicant :** **1)Daimler AG** Address of Applicant :70546 Stuttgart Germany Germany (72)**Name of Inventor :** **1)Mr. Amit Anurag** **2)Mr. Wolfgang Roessner**
(31) Priority Document No	:NA	
(32) Priority Date	:NA	
(33) Name of priority country	:NA	
(86) International Application No	:NA	
Filing Date	:NA	
(87) International Publication No	: NA	
(61) Patent of Addition to Application Number	:NA	
Filing Date	:NA	
(62) Divisional to Application Number	:NA	
Filing Date	:NA	

(57) Abstract :
A defrosting system 100 for efficient defrosting of windshields in automobiles is disclosed. The defrosting system 100 comprises a defrost air feed 110, a baffle 120, a wiper air feed 130, and a baffle opening 140. The defrost air feed 110 can include a plurality of air channel members 112 configured to selectively channel defrost air over a windshield interior 212. The baffle 120 is a flat plate having four edges and two surfaces. One end of the baffle 120 is closed while the other end is open with the opening being the baffle opening 140 that can allow airflow into a cabin of the automobile. The wiper air feed 130 is configured to provide defrost air to a wiper region on the windshield interior 212.The airflow from the wiper air feed 130 does not affect the airflow from defrost air feed 110.

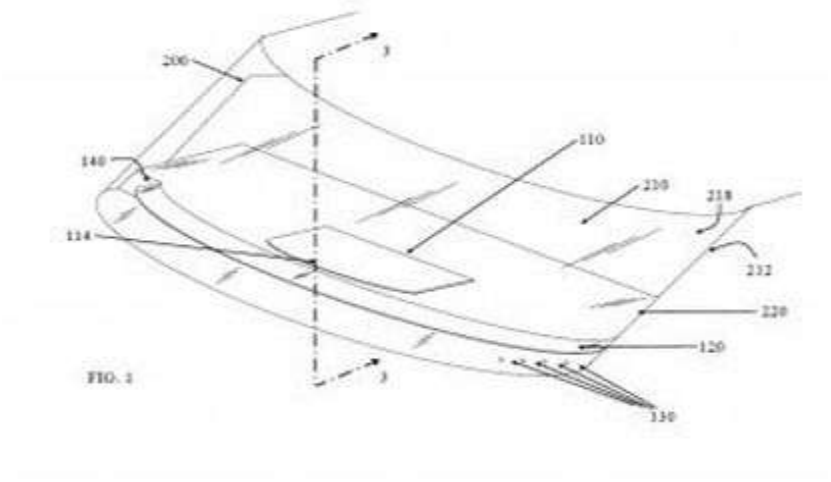

No. of Pages : 15 No. of Claims : 4

(12) PATENT APPLICATION PUBLICATION
(19) INDIA
(22) Date of filing of Application :10/12/2019

(21) Application No.201911051048 A
(43) Publication Date : 11/06/2021

(54) Title of the invention : DEVICE TO MEASURE TORSION BAR LINK BALL JOINT ANGLES

(51) International classification	:B60G0021055000, E02F0003430000, F04D0029360000, G01L0005220000, F41G0005240000	(71)**Name of Applicant :** **1)Daimler AG** Address of Applicant :70546 Stuttgart Germany Germany (72)**Name of Inventor :** **1)Mr. Manish C. Kumar** **2)Mr. Deepak Pandey**
(31) Priority Document No	:NA	
(32) Priority Date	:NA	
(33) Name of priority country	:NA	
(86) International Application No	:NA	
Filing Date	:NA	
(87) International Publication No	: NA	
(61) Patent of Addition to Application Number	:NA	
Filing Date	:NA	
(62) Divisional to Application Number	:NA	
Filing Date	:NA	

(57) Abstract :
A device 200 for measuring angular movement of ball joints in a torsion bar installation is disclosed. The device 200 includes a control unit 210 that receives kinematic information associated with the torsion bar and decodes co-ordinate values associated with operational positions of ball joints 204-1 and 204-2 of a torsion bar link 202. The ball joints 204-1 and 204-2 of the link 202 are coupled to a first actuator 240-1 and a second actuator 240-2, which move the coupled ball joints 204 to their respective operational positions. A set of sensors 250-1 and 250-2, coupled to the first actuator 240-1 and the second actuator 240-2, measure the tilt and rotational angles of ball studs 206 of the respective ball joints 204.

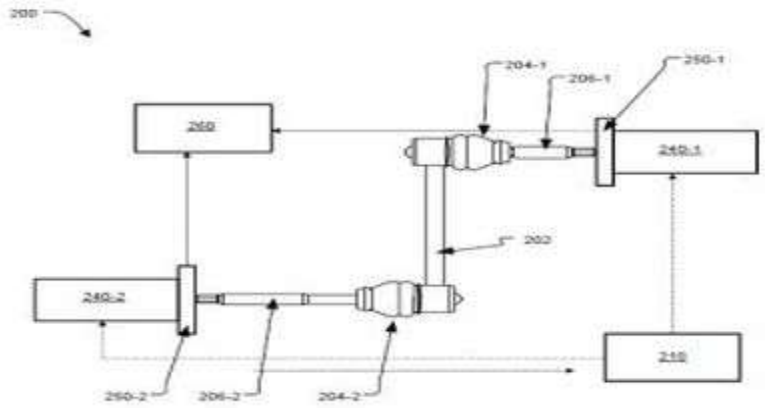

FIG. 2

No. of Pages : 16 No. of Claims : 2

(12) PATENT APPLICATION PUBLICATION
(19) INDIA
(22) Date of filing of Application :10/12/2019

(21) Application No.201911051049 A
(43) Publication Date : 11/06/2021

(54) Title of the invention : IMPROVED ROTOR COOLING FOR ELECTRIC MOTORS

(51) International classification	:H02K0001320000, H02K0001270000, F04D0029058000, H02K0001300000, F01D0005080000	(71)**Name of Applicant :** **1)Daimler AG** Address of Applicant :70546 Stuttgart Germany Germany (72)**Name of Inventor :** **1)Mr. Ravi Dharwad**
(31) Priority Document No	:NA	
(32) Priority Date	:NA	
(33) Name of priority country	:NA	
(86) International Application No	:NA	
Filing Date	:NA	
(87) International Publication No	: NA	
(61) Patent of Addition to Application Number	:NA	
Filing Date	:NA	
(62) Divisional to Application Number	:NA	
Filing Date	:NA	

(57) Abstract :
An improved rotor assembly 200 for an electric motor is disclosed. The rotor assembly 200 comprises a rotor shaft 202 having an axial bore 204 to allow flow of a coolant media towards a first end of the rotor assembly 200, and a plurality of rotor sheets 206. An inner circumference of the rotor sheets 206 are configured such that when the rotor sheets 206 are fitted on the rotor shaft 202 in a form of stack, passages 208 for flow of the coolant media are created between an inner periphery of the rotor sheets 206 and an outer periphery of the rotor shaft 206 to cool the rotor assembly. The passages 208 are fluidically coupled to the axial bore 204 through radial holes 210 of the rotor shaft 202, and configured to carry the coolant media towards a second end of the rotor assembly 200 from the first end.

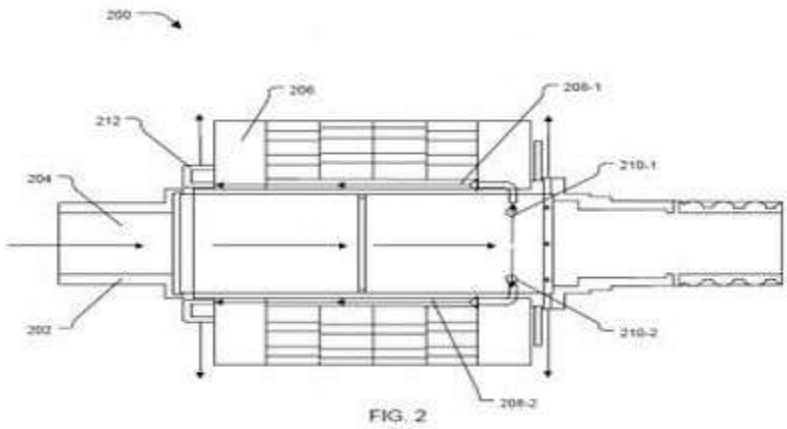

FIG. 2

No. of Pages : 14 No. of Claims : 8

(12) PATENT APPLICATION PUBLICATION
(19) INDIA
(22) Date of filing of Application :10/12/2019

(21) Application No.201911051050 A
(43) Publication Date : 11/06/2021

(54) Title of the invention : HOLDING ASSEMBLY FOR VEHICLES FOR HOLDING A PORTABLEELECTRONIC DEVICE

(51) International classification	:B60N0002750000, B60R0011020000, B60R0011000000, B60N0003000000, A41D0003020000
(31) Priority Document No	:NA
(32) Priority Date	:NA
(33) Name of priority country	:NA
(86) International Application No	:NA
Filing Date	:NA
(87) International Publication No	: NA
(61) Patent of Addition to Application Number	:NA
Filing Date	:NA
(62) Divisional to Application Number	:NA
Filing Date	:NA

(71)**Name of Applicant :**
1)Daimler AG
Address of Applicant :70546 Stuttgart Germany Germany
(72)**Name of Inventor :**
1)Mr. Nanda Kishore Panda
2)Mr. Rishab Raj
3)Mr. Joel Aranha

(57) Abstract :
An improved holding assembly for a vehicle for holding a portable electronic device 106 is disclosed. The disclosed holding assembly comprising a pocket 102 in an armrest 104 of a vehicle seat to accommodate the portable electronic device 106; and a slider 112 slidably configured with a guide 110 to move between a retracted position in which the slider 112 allows unhindered positioning or removal of the portable electronic device 106 from the pocket 102, and an extended position in which the slider 112 covers at least partially an open end of the pocket 102 to prevent the device 106 from flying out of the pocket 102. The slider 112 has a predefined mass such that, in the event of the crash, a momentum of the slider 112 overcomes the holding force of at last one clip 202 to move by itself to the extended position from the retracted position.

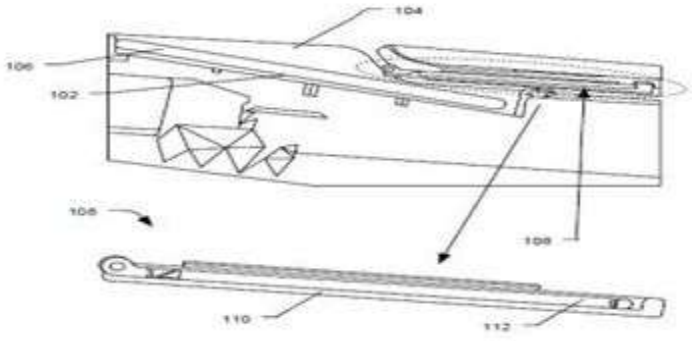

FIG. 1

No. of Pages : 12 No. of Claims : 10

(12) PATENT APPLICATION PUBLICATION
(21) Application No.201911051051 A
(19) INDIA
(22) Date of filing of Application :10/12/2019
(43) Publication Date : 11/06/2021

(54) Title of the invention : NANOEMULSION COMPOSITION FOR PEST MANAGEMENT

(51) International classification	:A61K0009107000, A61K0031000000, A23K0050750000, A61K0008060000, A61K0031050000	(71)**Name of Applicant :** **1)Indian Council of Agricultural Research** Address of Applicant :ICAR, Krishi Bhavan, Dr. Rajendra Prasad Road, New Delhi - 110001, India. Delhi India
(31) Priority Document No	:NA	(72)**Name of Inventor :**
(32) Priority Date	:NA	**1)KESAVAN SUBAHARAN**
(33) Name of priority country	:NA	**2)M.ESWARAMOORTHY**
(86) International Application No	:NA	**3)N.BAKTHAVATSALAM**
Filing Date	:NA	**4)G.SIVAKUMAR**
(87) International Publication No	: NA	
(61) Patent of Addition to Application Number	:NA	
Filing Date	:NA	
(62) Divisional to Application Number	:NA	
Filing Date	:NA	

(57) Abstract :
The present disclosure provides a nanoemulsion composition comprising an ajowan oil, or thymol with a surfactant for management of pests for example Musca domestica, especially in poultry and animal farms. The nanoemulsion composition as per the present disclosure comprising ajowan oil or thymol having homogeneous distribution of droplet size in the range of 20 nm to 500 nm is stable and capable of exhibiting superior repellence effect on pest like Musca domestica for its effective control in environmentally friendly manner. The present disclosure also provides a process for providing the nanoemulsion composition of ajowan oil or thymol.

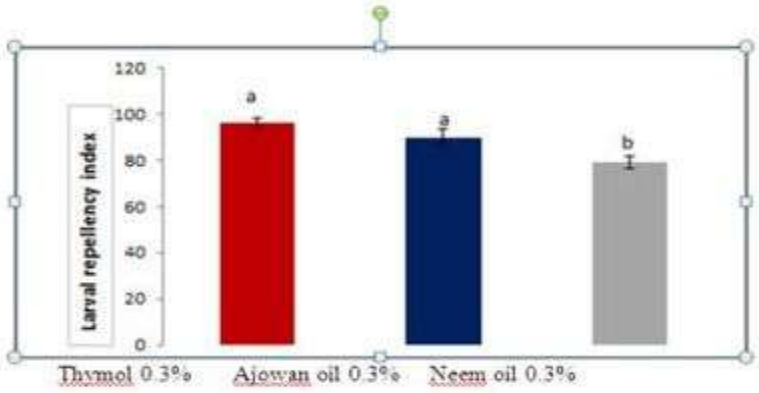

Figure 4

No. of Pages : 33 No. of Claims : 23

(12) PATENT APPLICATION PUBLICATION
(19) INDIA
(22) Date of filing of Application :10/12/2019

(21) Application No.201911051084 A
(43) Publication Date : 11/06/2021

(54) Title of the invention : DEVICE FOR CABLE INSTALLATION / DE-INSTALLATION

(51) International classification	:G01R0031080000, H02G0001100000, H02G0001080000, G02B0006440000, G06F0009440100	(71)**Name of Applicant :** **1)Sterlite Power Transmission Limited** Address of Applicant :F-2 Mira Corporate Suits Ishwar Nagar, New Delhi New Delhi India 110065 Delhi India (72)**Name of Inventor :** **1)Rajat Kumar Pradhan** **2)Rajan Kumar**
(31) Priority Document No	:NA	
(32) Priority Date	:NA	
(33) Name of priority country	:NA	
(86) International Application No	:NA	
Filing Date	:NA	
(87) International Publication No	: NA	
(61) Patent of Addition to Application Number	:NA	
Filing Date	:NA	
(62) Divisional to Application Number	:NA	
Filing Date	:NA	

(57) Abstract :
The present disclosure relates to a field of device for cable installation / de-installation and more particular to a device for installation / de-installation of cable between power transmission towers.

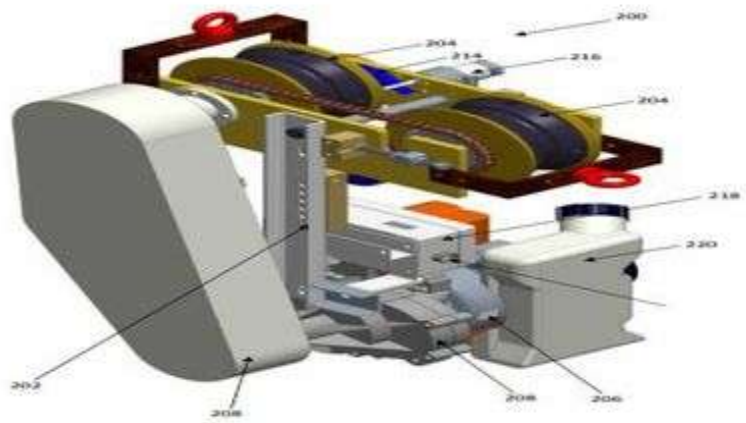

No. of Pages : 24 No. of Claims : 24

(12) PATENT APPLICATION PUBLICATION
(19) INDIA
(22) Date of filing of Application :10/12/2019
(21) Application No.201911051089 A
(43) Publication Date : 11/06/2021

(54) Title of the invention : DEVICE FOR HOUSING SCR LINES IN AUTOMOBILES

(51) International classification	:F01N0013000000, F01N0003200000, H04M0001020000, G06F0001160000, H01R0024200000	(71)**Name of Applicant :** **1)Daimler AG** Address of Applicant :70546 Stuttgart Germany Germany (72)**Name of Inventor :** **1)Mr. Rahul Manekar** **2)Mr. Praveen Chandra Vijapurapu** **3)Mr. Rohan Devan** **4)Ms. Sonia Chaudhri**
(31) Priority Document No	:NA	
(32) Priority Date	:NA	
(33) Name of priority country	:NA	
(86) International Application No	:NA	
Filing Date	:NA	
(87) International Publication No	: NA	
(61) Patent of Addition to Application Number	:NA	
Filing Date	:NA	
(62) Divisional to Application Number	:NA	
Filing Date	:NA	

(57) Abstract :
A device 100 for housing selective catalytic reduction (SCR) lines in an automobile is proposed. The device 100 comprises a first housing 110, a second housing 120, a spacer member 130, and a housing cover 140. The first housing 110 is configured to receive a first SCR line 112, with the first housing 110 being further configured to restrict the first SCR line 112 from releasing after being received. The second housing 120 is configured to receive a second SCR line 122. The second housing 120 is disposed diagonally with respect to the first housing 110 such that the first housing 110 is axially parallel to the second housing 120. The spacer member 130 is disposed between the first housing 110 and the second housing 120.The housing cover 140 is configured to cover the first housing 110 and the second housing 120 in an assembled position.

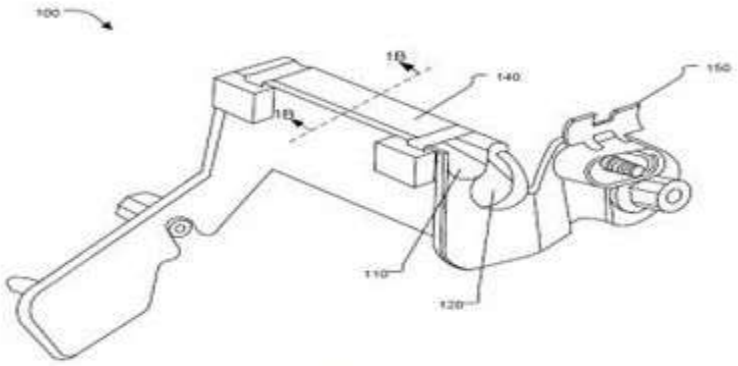

FIG. 1A

No. of Pages : 19 No. of Claims : 7

(12) PATENT APPLICATION PUBLICATION
(21) Application No.201911051131 A
(19) INDIA
(22) Date of filing of Application :10/12/2019
(43) Publication Date : 11/06/2021

(54) Title of the invention : CUP-SHAPED TOOL COMPONENT

(51) International classification	:B24B0023020000, B23B0031000000, B25B0023000000, B22F0005000000, B24D0015020000	(71)**Name of Applicant :** **1)INDIAN INSTITUTE OF TECHNOLOGY DELHI** Address of Applicant :Hauz Khas, New Delhi 110016, India Delhi India
(31) Priority Document No	:NA	(72)**Name of Inventor :** **1)JHA, Sunil**
(32) Priority Date	:NA	**2)VERMA, Tarun**
(33) Name of priority country	:NA	**3)CHAWLA, Onkar**
(86) International Application No	:NA	
Filing Date	:NA	
(87) International Publication No	: NA	
(61) Patent of Addition to Application Number	:NA	
Filing Date	:NA	
(62) Divisional to Application Number	:NA	
Filing Date	:NA	

(57) Abstract :
The present subject matter relates to a cup-shaped tool component (100, 800) which is couplable to a rotary adaptor (300a) of a surface finishing tool for a nano-level surface finishing of surfaces (612). The tool component (100, 800) is made of an elastomeric medium (614). The tool component (100, 800) includes a base portion (104, 404, 504) which is embedded with abrasive particles (102), and at least one protrusion (106) formed on an inner surface (108) of the tool component (100, 800). The at least one protrusion (106) is to couple the tool component (100, 800) to the rotary adaptor (300a) of the surface finishing tool for providing rotation to the tool component (100, 800) in conjunction with the rotation of the rotary adaptor (300a).

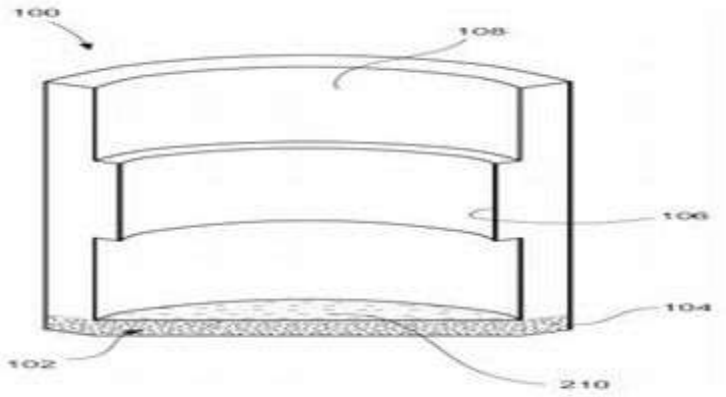

FIG. 2

No. of Pages : 28 No. of Claims : 20

(12) PATENT APPLICATION PUBLICATION
(19) INDIA
(22) Date of filing of Application :22/01/2020

(21) Application No.202014002872 A
(43) Publication Date : 11/06/2021

(54) Title of the invention : NEW-TYPE WATERWHEEL ROTATING DEVICE

(51) International classification	:F03B0017020000, B66F0007080000, F03G0007100000, B23Q0001520000, F01B0013060000	(71)**Name of Applicant :** **1)XIN, Xiaofei** Address of Applicant :New Power Bureau Building, Fuping Town, Baoding, Hebei 071000, China China (72)**Name of Inventor :** **1)XIN, Xiaofei**
(31) Priority Document No	:201922150041.X	
(32) Priority Date	:05/12/2019	
(33) Name of priority country	:China	
(86) International Application No	:NA	
Filing Date	:NA	
(87) International Publication No	: NA	
(61) Patent of Addition to Application Number	:NA	
Filing Date	:NA	
(62) Divisional to Application Number	:NA	
Filing Date	:NA	

(57) Abstract :
The present utility model discloses a new-type waterwheel rotating device, comprising a supporting plate, a rotating shaft, a rotating frame, a reinforcing ring and a power supply device, wherein the rotating frame comprises a rotating ring and rotating brackets, the rotating ring and the several rotating brackets being all fixedly connected, and one ends of the several rotating brackets being welded to a first cylinder assembly, a second cylinder assembly, a third cylinder assembly, a fourth cylinder assembly, a fifth cylinder assembly, a sixth cylinder assembly, a seventh cylinder assembly and an eighth cylinder assembly; and the first cylinder assembly comprises a cylinder, a seal pipe, a vent pipe, a water outlet and a water inlet, the cylinder being connected to the seal pipe, and the vent pipe being connected to the other end of the seal pipe. By means of air suction and water discharge through the piston motion of the cylinders, the vacuum cylinders under water float upwards. The cylinders above water discharge air and enter the water, which circulate in turn to make the waterwheel rotate continuously. The most important feature of this waterwheel is to utilize the buoyancy of water.

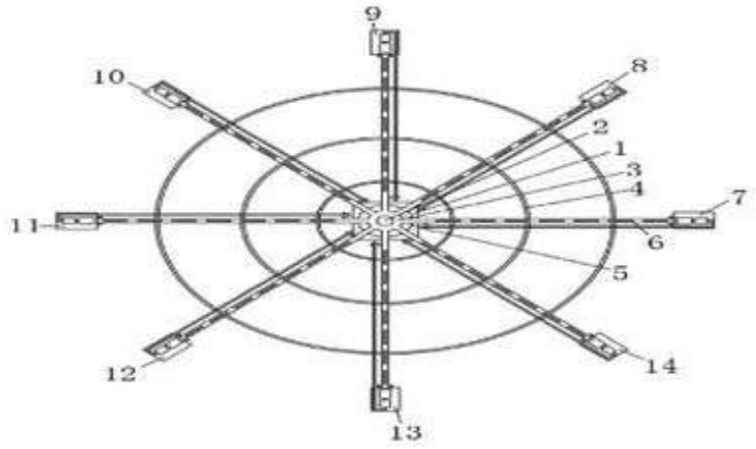

No. of Pages : 8 No. of Claims : 3

(12) PATENT APPLICATION PUBLICATION
(19) INDIA
(22) Date of filing of Application :12/06/2020
(21) Application No.202014024687 A
(43) Publication Date : 11/06/2021

(54) Title of the invention : DOOR LOCKING STRUCTURE •

(51) International classification	:G07F0019000000, G07C0009000000, E05B0063000000, G10L0015260000, E05C0019180000
(31) Priority Document No	:10-2019-0163264
(32) Priority Date	:10/12/2019
(33) Name of priority country	:Republic of Korea
(86) International Application No	:NA
Filing Date	:NA
(87) International Publication No	: NA
(61) Patent of Addition to Application Number	:NA
Filing Date	:NA
(62) Divisional to Application Number	:NA
Filing Date	:NA

(71)**Name of Applicant :**
1)HYUNDAI MOTOR COMPANY
Address of Applicant :12 Heolleung-ro, Seocho-gu, Seoul 06797, Republic of Korea Republic of Korea
2)KIA MOTORS CORPORATION
(72)**Name of Inventor :**
1)CHO, Ki Hyun
2)CHO, Eui Chan

(57) Abstract :
A door locking structure includes a door located at a side of a vehicle, a locking unit provided at the door, an input unit configured to apply unlocking input to the locking unit, and a controller configured to receive the input through the input unit and to unlock the locking unit, wherein the controller is configured to integrally unlock the locking unit in response to the input through the input unit.

No. of Pages : 34 No. of Claims : 20

(12) PATENT APPLICATION PUBLICATION
(19) INDIA
(22) Date of filing of Application :15/06/2020
(21) Application No.202014025021 A
(43) Publication Date : 11/06/2021

(54) Title of the invention : BIDIRECTIONAL DOOR OPENING MODULE •

(51) International classification	:F25D0023020000, E05F0001100000, E05D0011000000, E05D0015160000, G01S0007481000
(31) Priority Document No	:10-2019-0163265
(32) Priority Date	:10/12/2019
(33) Name of priority country	:Republic of Korea
(86) International Application No	:NA
Filing Date	:NA
(87) International Publication No	: NA
(61) Patent of Addition to Application Number	:NA
Filing Date	:NA
(62) Divisional to Application Number	:NA
Filing Date	:NA

(71)**Name of Applicant :**
1)HYUNDAI MOTOR COMPANY
Address of Applicant :12 Heolleung-ro, Seocho-gu, Seoul 06797, Republic of Korea Republic of Korea
2)KIA MOTORS CORPORATION
(72)**Name of Inventor :**
1)CHO, Ki Hyun
2)JUNG, Chung Hwa

(57) Abstract :
A bidirectional door opening module includes a vehicle body panel located between a first door configured to be rotated to open one end of a vehicle and a second door configured to be rotated to open a remaining end of the vehicle, anda drive unit coupled to the vehicle body panel and configured to apply opening force to the first door and the second door, wherein the drive unit includes a driver configured to apply driving force so as to open the first door or the second door, rail units configured to receive the driving force of thedriver and then to apply opening force to the first door or the second door, and hinge units coupled to the rail units and configured to perform rotary opening of the first door or the second door.

No. of Pages : 30 No. of Claims : 20

(12) PATENT APPLICATION PUBLICATION
(21) Application No.202014025941 A
(19) INDIA
(22) Date of filing of Application :19/06/2020
(43) Publication Date : 11/06/2021

(54) Title of the invention : ULTRASOUND DIAGNOSTIC APPARATUS BODY

(51) International classification	:G01N0033533000, H05B0031000000, B01J0020286000, C02F0003280000, B63C0007260000
(31) Priority Document No	:2019-220715
(32) Priority Date	:05/12/2019
(33) Name of priority country	:Japan
(86) International Application No	:NA
Filing Date	:NA
(87) International Publication No	: NA
(61) Patent of Addition to Application Number	:NA
Filing Date	:NA
(62) Divisional to Application Number	:NA
Filing Date	:NA

(71)**Name of Applicant :**
1)Hitachi, Ltd.
Address of Applicant :6-6, Marunouchi 1-chome, Chiyoda-ku, Tokyo 100-8280, Japan Japan
(72)**Name of Inventor :**
1)Hidenao KUBOTA
2)Shintaro TAKEHARA
3)Katsunori ASAFUSA

(57) Abstract :
In an ultrasound diagnostic apparatus body to which various monitors can be connected, an image quality of an ultrasound image displayed on the monitor is adapted 5 according to the monitor. When a monitor (16) is connected to an apparatus body (12), a controller (50) of the monitor (16) transmits EDID information (44) to the apparatus body (12). A display control unit (30) specifies, based on monitor identification information included in the received EDID information (44), an image quality parameter correlated to the monitor identification information from among image quality parameter information 10 (52). The display control unit (30) transmits image quality information indicating the specified image quality parameter set to the monitor (16) along with the ultrasound image formed by an image former (24). The controller (50) of the monitor (16) determines a display setting of a display (48) based on the image quality information transmitted from the apparatus body (12), and causes the ultrasound image transmitted from the apparatus 15 body (12) to be displayed on the display (48).

No. of Pages : 38 No. of Claims : 9

(12) PATENT APPLICATION PUBLICATION
(19) INDIA
(22) Date of filing of Application :19/06/2020

(21) Application No.202014025996 A
(43) Publication Date : 11/06/2021

(54) Title of the invention : STRADDLED VEHICLE

(51) International classification	:B62J0035000000, B62K0011100000, B62K0011040000, B62K0005010000, B60J0007043000
(31) Priority Document No	:JP 2019-127811
(32) Priority Date	:09/07/2019
(33) Name of priority country	:Japan
(86) International Application No	:NA
Filing Date	:NA
(87) International Publication No	: NA
(61) Patent of Addition to Application Number	:NA
Filing Date	:NA
(62) Divisional to Application Number	:NA
Filing Date	:NA

(71)**Name of Applicant :**
1)YAMAHA HATSUDOKI KABUSHIKI KAISHA
Address of Applicant :2500 Shingai, Iwata-shi, Shizuoka 4388501 Japan Japan
(72)**Name of Inventor :**
1)TASPON TANTITAWEEPORN
2)TANAKORN PHUAKNOY

(57) Abstract :
A straddled vehicle includes a vehicle body frame, a side cover, a fuel tank and a tank cover. The vehicle body frame includes a main frame and a rear frame. The main frame extends backward from the head pipe. The rear frame extends backward from the main frame. The side cover is fixed to the vehicle body frame. The fuel tank is supported by the vehicle body frame. The tank cover is connected to the fuel tank and includes a cover body 10 disposed directly above the side cover in order to cover the fuel tank. The side cover includes at least one cover fastening portion and at least one frame fastening portion. The at least one cover fastening portion is fixed to the tank cover and is disposed to overlap with the tank cover in a vehicle side view. The at least one frame fastening portion is fixed to the vehicle body frame and is disposed below the at least one cover fastening portion

No. of Pages : 26 No. of Claims : 11

(12) PATENT APPLICATION PUBLICATION
(21) Application No.202014030199 A
(19) INDIA
(22) Date of filing of Application :15/07/2020
(43) Publication Date : 11/06/2021

(54) Title of the invention : CAMERA MODULE

(51) International classification	:C07D0403120000, H04W0036220000, C07D0403140000, C07D0417060000, C07D0413040000
(31) Priority Document No	:10-2019-0164033
(32) Priority Date	:10/12/2019
(33) Name of priority country	:Republic of Korea
(86) International Application No	:NA
Filing Date	:NA
(87) International Publication No	: NA
(61) Patent of Addition to Application Number	:NA
Filing Date	:NA
(62) Divisional to Application Number	:NA
Filing Date	:NA

(71)**Name of Applicant :**
1)SAMSUNG ELECTRO-MECHANICS CO., LTD.
Address of Applicant :Maeyoung-ro 150 (Maetan-dong), Youngtong-gu, Suwon-si, Gyeonggi-do, Republic of Korea Republic of Korea
(72)**Name of Inventor :**
1)Bo Sung SEO
2)Hong Joo LEE
3)Young Bok YOON
4)Jung Seok LEE

(57) Abstract :
A camera module includes a carrier supported on a housing and movable in an optical axis direction, at least one frame supported on the carrier and movable, relative to the carrier, in at least one direction perpendicular to the optical axis direction, and a lens module supported on the frame. The frame is supported on the carrier such that attractive force acts in the at least one direction perpendicular to the optical axis direction.

No. of Pages : 43 No. of Claims : 19

(12) PATENT APPLICATION PUBLICATION
(21) Application No.202014030598 A
(19) INDIA
(22) Date of filing of Application :17/07/2020
(43) Publication Date : 11/06/2021

(54) Title of the invention : CAMERA MODULE

(51) International classification	:C07D0403120000, H04W0036220000, C07D0403140000, C07D0417060000, C07D0413040000
(31) Priority Document No	:10-2019-0164032
(32) Priority Date	:10/12/2019
(33) Name of priority country	:Republic of Korea
(86) International Application No	:NA
Filing Date	:NA
(87) International Publication No	: NA
(61) Patent of Addition to Application Number	:NA
Filing Date	:NA
(62) Divisional to Application Number	:NA
Filing Date	:NA

(71)**Name of Applicant :**
1)SAMSUNG ELECTRO-MECHANICS CO., LTD.
Address of Applicant :Maeyoung-ro 150 (Maetan-dong), Youngtong-gu, Suwon-si, Gyeonggi-do, Republic of Korea Republic of Korea
(72)**Name of Inventor :**
1)Bo Sung SEO
2)Jung Seok LEE
3)Young Bok YOON

(57) Abstract :
A camera module includes a carrier supported on a housing and movable in an optical axis direction, a frame supported on the carrier and movable, relative to the carrier, in a first direction perpendicular to the optical axis direction, and a lens module supported on the frame and movable, relative to the frame, in a second direction perpendicular to the optical axis direction. One of the frame and the lens module is supported such that attractive force acts in one of the first direction and the second direction.

No. of Pages : 30 No. of Claims : 20

(12) PATENT APPLICATION PUBLICATION
(19) INDIA
(22) Date of filing of Application :15/09/2020
(21) Application No.202014039899 A
(43) Publication Date : 11/06/2021

(54) Title of the invention : OPENING STRUCTURE FOR LOWER DOOR •

(51) International classification	:B60R0013040000, B60R0013020000, H01J0037340000, B60R0011000000, H04M0001020000
(31) Priority Document No	:10-2019-0161209
(32) Priority Date	:06/12/2019
(33) Name of priority country	:Republic of Korea
(86) International Application No	:NA
Filing Date	:NA
(87) International Publication No	: NA
(61) Patent of Addition to Application Number	:NA
Filing Date	:NA
(62) Divisional to Application Number	:NA
Filing Date	:NA

(71)**Name of Applicant :**
1)HYUNDAI MOTOR COMPANY
Address of Applicant :12 Heolleung-ro, Seocho-gu, Seoul 06797, Republic of Korea Republic of Korea
2)KIA MOTORS CORPORATION
(72)**Name of Inventor :**
1)RAMPALLI, Sudhir
2)CHO, Ki Hyun
3)JUNG, Chung hwa

(57) Abstract :
ABSTRACT OPENING STRUCTURE FOR LOWER DOOR An opening structure includes a lower door having an upper end configured to be rotated and opened with respect to a lower surface of a vehicle body, a garnish unit located on a surface of the lower door, at least a portion of a lower end of the garnish unit configured to be tilted from the lower door, a driving unit extending in a longitudinal direction and configured to apply driving force to the lower door and the garnish unit, a first driver configured to tilt the garnish unit, a second driver configured to integrally pop up the tilted garnish unit and the lower door and to apply opening force thereto, and a hinge arm connecting the first driver and the second driver to each other.

No. of Pages : 33 No. of Claims : 20

(12) PATENT APPLICATION PUBLICATION
(19) INDIA
(22) Date of filing of Application :15/09/2020
(21) Application No.202014039970 A
(43) Publication Date : 11/06/2021

(54) Title of the invention : DRIVING CIRCUIT

(51) International classification	:G11C0019000000, G02B0021360000, G06F0009380000, G06F0001329600, H05B0037020000
(31) Priority Document No	:108144792
(32) Priority Date	:06/12/2019
(33) Name of priority country /region	:Taiwan
(86) International Application No	:NA
Filing Date	:NA
(87) International Publication No	: NA
(61) Patent of Addition to Application Number	:NA
Filing Date	:NA
(62) Divisional to Application Number	:NA
Filing Date	:NA

(71)**Name of Applicant :**
1)AU Optronics Corporation
Address of Applicant :NO. 1, LI-HSIN ROAD 2, SCIENCE-BASED INDUSTRIAL PARK, HSIN-CHU, TAIWAN
(72)**Name of Inventor :**
1)Wei-Li LIN
2)Che-Wei TUNG

(57) Abstract :
ABSTRACT OF THE DISCLOSURE DRIVING CIRCUIT A driving circuit includes a S stage register, a first connect line, a (S+A) stage register and a second connect line. The S stage register receives a S stage control signal through a first switch unit and a second switch unit, so that the S stage register performs voltage regulation and outputs a S stage scan signal. The first connect line is electrically connected to the first switch unit of the S stage register. A third switch unit of the (S+A) stage register is electrically connected to the first connect line and a fourth switch unit of the (S+A) stage register for receiving the S stage scan signal, so that The (S+A) stage register performs voltage regulation. The second connect line is electrically connected to the second switch unit of the S stage register and the fourth switch unit of the (S+A) stage register.

No. of Pages : 26 No. of Claims : 10

(12) PATENT APPLICATION PUBLICATION
(19) INDIA
(22) Date of filing of Application :17/09/2020
(21) Application No.202014040322 A
(43) Publication Date : 11/06/2021

(54) Title of the invention : VEHICLE BODY

(51) International classification	:B62D0025080000, B60R0016020000, B62D0021150000, B62D0021180000, B62D0025140000
(31) Priority Document No	:10-2019-0160979
(32) Priority Date	:05/12/2019
(33) Name of priority country	:Republic of Korea
(86) International Application No	:NA
Filing Date	:NA
(87) International Publication No	: NA
(61) Patent of Addition to Application Number	:NA
Filing Date	:NA
(62) Divisional to Application Number	:NA
Filing Date	:NA

(71)**Name of Applicant :**
1)HYUNDAI MOTOR COMPANY
Address of Applicant :12, Heolleung-ro, Seocho-gu, Seoul 06797, Republic of Korea Republic of Korea
2)KIA MOTORS CORPORATION
(72)**Name of Inventor :**
1)KIM, Won Oh
2)KIM, Ho Yeon
3)KIM, Byung Gyu
4)HEO, Chul Hee

(57) Abstract :
VEHICLE BODY • A vehicle body includes a rigid member having a tubular shape that is closed in cross-section. The rigid member includes a front member, a dash cross member, a rear member, and a center member, which form main frames at the front, rear, and center of the bottom of the vehicle body. The rigid member also includes pillar members that form main frames at both sides of the top of the vehicle body. Connecting members that each have a tubular shape that is open at one surface thereof are connected to the members of the rigid member.

No. of Pages : 31 No. of Claims : 19

(12) PATENT APPLICATION PUBLICATION
(19) INDIA
(22) Date of filing of Application :17/09/2020
(21) Application No.202014040323 A
(43) Publication Date : 11/06/2021

(54) Title of the invention : BODY FOR VEHICLE

(51) International classification	:B62D0025200000, F23C0006040000, G02B0006440000, H01L0021680000, B64C0001060000
(31) Priority Document No	:10-2019-0160983
(32) Priority Date	:05/12/2019
(33) Name of priority country	:Republic of Korea
(86) International Application No	:NA
Filing Date	:NA
(87) International Publication No	: NA
(61) Patent of Addition to Application Number	:NA
Filing Date	:NA
(62) Divisional to Application Number	:NA
Filing Date	:NA

(71)**Name of Applicant :**
1)HYUNDAI MOTOR COMPANY
Address of Applicant :12, Heolleung-ro, Seocho-gu, Seoul 06797, Republic of Korea Republic of Korea
2)KIA MOTORS CORPORATION
(72)**Name of Inventor :**
1)KIM, Byung Gyu
2)KIM, Won Oh

(57) Abstract :
A body for a vehicle includes a first member provided at a lower portion of a front floor module extending to a front of a second member provided at a center floor module, and a third member provided at a lower portion of a rear floor module extending to a rear of the second member provided at the center floor module to form a main load path along the first, second, and third members extending from a foremost end of the vehicle to a hindmost end of the vehicle.

No. of Pages : 31 No. of Claims : 20

(12) PATENT APPLICATION PUBLICATION
(19) INDIA
(22) Date of filing of Application :16/10/2020
(21) Application No.202014045185 A
(43) Publication Date : 11/06/2021

(54) Title of the invention : DISPLAY DEVICE

(51) International classification	:G02F0001134500, G09G0003360000, H01L0027320000, H02H0009000000, G09G0005000000
(31) Priority Document No	:108144203
(32) Priority Date	:04/12/2019
(33) Name of priority country /region	:Taiwan
(86) International Application No	:NA
Filing Date	:NA
(87) International Publication No	: NA
(61) Patent of Addition to Application Number	:NA
Filing Date	:NA
(62) Divisional to Application Number	:NA
Filing Date	:NA

(71)**Name of Applicant :**
1)AU Optronics Corporation
Address of Applicant :NO. 1, LI-HSIN ROAD 2, SCIENCE-BASED INDUSTRIAL PARK, HSIN-CHU, TAIWAN
(72)**Name of Inventor :**
1)Chin-Hao CHANG
2)Wei-Li LIN

(57) Abstract :
ABSTRACT DISPLAY DEVICE A display device is provided. The display device includes an internal driving circuit, an external circuit and a plurality of signal lines. The signal lines are electrically connected with the internal driving circuit and the external circuit. Each signal line includes N signal line sections, Ma first turning points and Mb second turning points, wherein the N signal line sections are connected with each other, each of the Ma first turning points and the Mb second turning points is located at the connecting site of the two adjacent signal line sections, N and Ma are positive integers, Mb is 0 or a positive integer, N3, Ma2, Ma+MbN-1, the resistance change rate between the two adjacent signal line sections connected with each first turning point is R, and 0

No. of Pages : 37 No. of Claims : 10

(12) PATENT APPLICATION PUBLICATION
(19) INDIA
(22) Date of filing of Application :29/10/2020
(21) Application No.202014047350 A
(43) Publication Date : 11/06/2021

(54) Title of the invention : REFRIGERATOR

(51) International classification :F25D0017060000, F25D0011020000, F25D0017040000, F25C0001000000, F25D0017080000
(31) Priority Document No :10-2019-0163005
(32) Priority Date :09/12/2019
(33) Name of priority country :Republic of Korea
(86) International Application No :NA
Filing Date :NA
(87) International Publication No : NA
(61) Patent of Addition to Application Number:NA
Filing Date :NA
(62) Divisional to Application Number :NA
Filing Date :NA

(71)**Name of Applicant :**
1)LG ELECTRONICS INC.
Address of Applicant :128, Yeoui-daero, Yeongdeungpo-gu, Seoul, 07336, Republic of Korea Republic of Korea
(72)**Name of Inventor :**
1)Park, Jong Gyu
2)Kim, Ki hwang
3)Kang, Sung hee

(57) Abstract :
ABSTRACT REFRIGERATOR A refrigerator includes a cabinet having a freezing compartment below a refrigerating compartment, an ice making compartment at a side of the refrigerating compartment, an evaporator, a shroud that is disposed at a front side of the evaporator, a grille panel coupled to a front surface of the shroud, a first cool air guide channel defined between the grille panel and the shroud and configured to guide cool air to a freezing compartment, a second cool air guide channel defined between the grille panel and the shroud and configured guide cool air to the ice making compartment, a freezing fan module disposed between the grille panel and the shroud and configured to supply cool air to the first cool air guide channel, and an ice making fan module disposed between the grille panel and the shroud and configured to supply cool air to the second cool air guide channel.

No. of Pages : 199 No. of Claims : 20

(12) PATENT APPLICATION PUBLICATION
(19) INDIA
(22) Date of filing of Application :06/11/2020
(21) Application No.202014048564 A
(43) Publication Date : 11/06/2021

(54) Title of the invention : TRIBLOCK COPOLYMER CONCENTRATES FOR LUBRICATING OIL COMPOSITIONS

(51) International classification	:C10M0143120000, C08L0053000000, C08F0297040000, A23D0009007000, C10M0101000000
(31) Priority Document No	:16/704,078
(32) Priority Date	:05/12/2019
(33) Name of priority country	:U.S.A.
(86) International Application No	:NA
Filing Date	:NA
(87) International Publication No	: NA
(61) Patent of Addition to Application Number	:NA
Filing Date	:NA
(62) Divisional to Application Number	:NA
Filing Date	:NA

(71)**Name of Applicant :**
1)INFINEUM INTERNATIONAL LIMITED
Address of Applicant :P.O. Box 1, Milton Hill, Abingdon, Oxfordshire OX13 6BB, United Kingdom U.K.
(72)**Name of Inventor :**
1)ZHAO, Yi
2)CUI, Jun
3)BRIGGS, Stuart
4)GALBRAITH, Ewan

(57) Abstract :
A VM concentrate comprising: from about 60 to about 95 parts (and at least 50 wt%) of a diluent oil (e.g., having a KV100 of about 2 cSt to about 40 cSt); and from about 5 parts to about 40 parts (and at least 6.0 wt%) of a linear triblock copolymer characterized by the formula: D™-PA-D™™; wherein D™ represents a block derived from diene, PA represents a block derived from monoalkenyl arene, D™™ represents a block derived from diene, and the linear triblock copolymer is present in an amount effective to modify a lubricating kinematic viscosity at approximately 100°C (KV100) of the concentrate, and wherein the KV100 of the concentrate is about 3000 cSt or less. The linear triblock copolymer may additionally or alternatively have a thickening efficiency span of at most 0.5.

No. of Pages : 43 No. of Claims : 36

(12) PATENT APPLICATION PUBLICATION
(19) INDIA
(22) Date of filing of Application :23/11/2020
(21) Application No.202014050826 A
(43) Publication Date : 11/06/2021

(54) Title of the invention : DIISOCYANATE COMPOSITION FOR OPTICAL LENS AND PREPARATION METHOD THEREOF •

(51) International classification	:G02B0001040000, C08G0018380000, C08G0018760000, B29D0011000000, G02B0001140000
(31) Priority Document No	:10-2019-0162101
(32) Priority Date	:06/12/2019
(33) Name of priority country	:Republic of Korea
(86) International Application No	:NA
Filing Date	:NA
(87) International Publication No	: NA
(61) Patent of Addition to Application Number	:NA
Filing Date	:NA
(62) Divisional to Application Number	:NA
Filing Date	:NA

(71)**Name of Applicant :**
1)SKC CO., LTD.
Address of Applicant :84, Jangan-ro 309beon-gil, Jangan-gu, Suwon-si, Gyeonggi-do 16336, Republic of Korea Republic of Korea
2)WOORI FINE CHEM CO., LTD.
(72)**Name of Inventor :**
1)PAI, Jaeyoung
2)KIM, Jeongmoo
3)HAN, Hyuk Hee
4)MYUNG, Jung Hwan

(57) Abstract :
ABSTRACT DIISOCYANATE COMPOSITION FOR OPTICAL LENS AND PREPARATION METHOD THEREOF According to an embodiment, the pH of a diisocyanate composition and a diamine hydrochloride composition used in the preparation of an optical lens is adjusted to a specific range, whereby it is possible to enhance not only the yield and purity of the diisocyanate composition but also the optical characteristics of the final optical lens by suppressing the striae and cloudiness. Specifically, according to the process of the embodiment, the amount of an aqueous hydrochloric acid solution introduced to the reaction may be adjusted to control the pH of the diisocyanate composition to a desired range, thereby enhancing the yield and purity. Accordingly, the process for preparing a diisocyanate composition according to the embodiment can be applied to the preparation of a plastic optical lens of high quality.

No. of Pages : 47 No. of Claims : 10

(12) PATENT APPLICATION PUBLICATION
(21) Application No.202014051253 A
(19) INDIA
(22) Date of filing of Application :25/11/2020
(43) Publication Date : 11/06/2021

(54) Title of the invention : DIISOCYANATE COMPOSITION, PREPARATION METHOD THEREOF AND OPTICAL MATERIAL USING SAME •

(51) International classification	:G02B0001040000, C08G0018720000, C08G0018380000, C08L0063000000, B32B0027180000
(31) Priority Document No	:10-2019-0161447
(32) Priority Date	:06/12/2019
(33) Name of priority country	:Republic of Korea
(86) International Application No	:NA
Filing Date	:NA
(87) International Publication No	: NA
(61) Patent of Addition to Application Number	:NA
Filing Date	:NA
(62) Divisional to Application Number	:NA
Filing Date	:NA

(71)**Name of Applicant :**
1)SKC CO., LTD.
Address of Applicant :84, Jangan-ro 309beon-gil, Jangan-gu, Suwon-si, Gyeonggi-do 16336, Republic of Korea Republic of Korea
2)WOORI FINE CHEM CO., LTD.
(72)**Name of Inventor :**
1)PAI, Jaeyoung
2)KIM, Jeongmoo
3)HAN, Hyuk Hee
4)MYUNG, Jung Hwan
5)KYUN, Myung-Ok
6)JUNG, Jooyoung

(57) Abstract :
ABSTRACT DIISOCYANATE COMPOSITION, PREPARATION METHOD THEREOF AND OPTICAL MATERIAL USING SAME The diisocyanate composition according to an embodiment of the present invention comprises, in the composition, a benzyl isocyanate having a methyl group in an amount of 5 ppm to 200 ppm, an aromatic compound having a halogen group in an amount of 5 ppm to 1,000 ppm, a benzyl isocyanate having an ethyl group in an amount of 1 ppm to 1,000 ppm, or a combination thereof. It is possible to improve the optical characteristics by preventing the occurrence of yellowing, striae, and cloudiness and to enhance the mechanical properties such as impact resistance at the same time. Thus, it can be advantageously used to prepare an optical material of high quality.

No. of Pages : 57 No. of Claims : 12

(12) PATENT APPLICATION PUBLICATION
(19) INDIA
(22) Date of filing of Application :26/11/2020

(21) Application No.202014051487 A
(43) Publication Date : 11/06/2021

(54) Title of the invention : METHOD OF PREPARING DIISOCYANATE COMPOSITION AND OPTICAL LENS •

(51) International classification	:C07C0263100000, G02B0001040000, C01C0001240000, C08G0018380000, C08G0073100000
(31) Priority Document No	:10-2019-0161540
(32) Priority Date	:06/12/2019
(33) Name of priority country	:Republic of Korea
(86) International Application No	:NA
Filing Date	:NA
(87) International Publication No	: NA
(61) Patent of Addition to Application Number	:NA
Filing Date	:NA
(62) Divisional to Application Number	:NA
Filing Date	:NA

(71)**Name of Applicant :**
1)SKC CO., LTD.
Address of Applicant :84, Jangan-ro 309beon-gil, Jangan-gu, Suwon-si, Gyeonggi-do 16336, Republic of Korea Republic of Korea
2)WOORI FINE CHEM CO., LTD.
(72)**Name of Inventor :**
1)PAI, Jaeyoung
2)KIM, Jeongmoo
3)HAN, Hyuk Hee
4)MYUNG, Jung Hwan
5)JUNG, Jooyoung
6)KYUN, Myung-Ok

(57) Abstract :
Abstract METHOD OF PREPARING DIISOCYANATE COMPOSITION AND OPTICAL LENS • In the embodiments, an aqueous hydrochloric acid solution instead of hydrogen chloride gas and solid triphosgene instead of phosgene gas may be used in the process of preparing a diisocyanate from a diamine through a diamine hydrochloride. In addition, the embodiments provide processes for preparing a diisocyanate composition and an optical lens of higher quality by controlling the water content in the diamine hydrochloride composition for preparing a diisocyanate within a specific range.

No. of Pages : 41 No. of Claims : 10

(12) PATENT APPLICATION PUBLICATION
(21) Application No.202014051589 A
(19) INDIA
(22) Date of filing of Application :26/11/2020
(43) Publication Date : 11/06/2021

(54) Title of the invention : CLUSTER HEAD NOZZLE FOR SPRAYING A FLUID, ARRANGEMENT HAVING A CLUSTER HEAD NOZZLE AND METHOD FOR PRODUCING A CLUSTER HEAD NOZZLE

(51) International classification	:H04W0084180000, B60T0017000000, B29B0007800000, B29B0007740000, B33Y0080000000	(71)**Name of Applicant :** **1)Lechler GmbH** Address of Applicant :Ulmer Strasse 128, 72555 Metzingen, Germany Germany (72)**Name of Inventor :** **1)Thomas Zeeb**
(31) Priority Document No	:10 2019 218 892.3	
(32) Priority Date	:04/12/2019	
(33) Name of priority country	:Germany	
(86) International Application No	:NA	
Filing Date	:NA	
(87) International Publication No	: NA	
(61) Patent of Addition to Application Number	:NA	
Filing Date	:NA	
(62) Divisional to Application Number	:NA	
Filing Date	:NA	

(57) Abstract :
Abstract Cluster head nozzle for spraying a fluid, arrangement having a cluster head nozzle and method for producing a cluster head nozzle The invention relates to a cluster head nozzle for spraying a fluid, having a housing and having multiple outlet openings, which are arranged around a central region on a front side of the housing, for individual spray jets of at least one purge air outlet opening for purge air, in the case of which cluster head nozzle the at least one purge air outlet opening and at least sections of a feed channel for the purge air are provided in the single-piece housing. [Figure 4]

No. of Pages : 44 No. of Claims : 15

(12) PATENT APPLICATION PUBLICATION
(19) INDIA
(22) Date of filing of Application :26/11/2020
(21) Application No.202014051600 A
(43) Publication Date : 11/06/2021

(54) Title of the invention : HOLOGRAPHIC QUANTUM DYNAMICS SIMULATION

(51) International classification	:G06N0010000000, B82Y0010000000, H01L0029660000, H04N0019172000, H01L0023000000
(31) Priority Document No	:16/705,727
(32) Priority Date	:06/12/2019
(33) Name of priority country	:U.S.A.
(86) International Application No	:NA
Filing Date	:NA
(87) International Publication No	: NA
(61) Patent of Addition to Application Number	:NA
Filing Date	:NA
(62) Divisional to Application Number	:NA
Filing Date	:NA

(71)**Name of Applicant :**
1)HONEYWELL INTERNATIONAL INC.
Address of Applicant :Intellectual Property Services Group 300 S. Tryon Street, Suite 600 Charlotte, North Carolina 28202, United States of America U.S.A.
(72)**Name of Inventor :**
1)MICHAEL FEIG
2)ANDREW C. POTTER

(57) Abstract :
A quantum computer controller receives a quantum circuit comprising circuit slices. The first slice comprises a past causal cone of a first system qubit wire at a fully evolved level of the circuit. An i-th slice contains all gates that are within a past causal cone of a system qubit wire that reaches the fully evolved level in slice i that are not in the past causal cone of a system qubit wire that reaches the fully evolved level in slice i-j. The controller causes execution of the i-th slice using the physical qubits; causes a physical qubit that was evolved along a system qubit wire to the fully evolved level via execution of the i-th slice to be reinitialized and reintroduced onto a system qubit wire at a base level of the i+m-th slice; and causes the quantum computer to use the physical qubit to execute the i+m-th slice.

No. of Pages : 37 No. of Claims : 10

(12) PATENT APPLICATION PUBLICATION
(21) Application No.202014051603 A
(19) INDIA
(22) Date of filing of Application :26/11/2020
(43) Publication Date : 11/06/2021

(54) Title of the invention : DUST COVER FOR AN ELECTRICAL CONNECTOR IN AN ELECTRONIC CONTROL UNIT (ECU) ASSEMBLY

(51) International classification	:B01L0003000000, H01R0013520000, H01R0013740000, H02S0040340000, H01R0013518000	(71)**Name of Applicant :** **1)PERKINS ENGINES COMPANY LIMITED** Address of Applicant :Frank Perkins Way Eastfield Peterborough, Cambridgeshire PE1 5FQ/GB, United Kingdom U.K.
(31) Priority Document No	:1917881.3	(72)**Name of Inventor :**
(32) Priority Date	:06/12/2019	**1)CONSTANTINE, Martin G.**
(33) Name of priority country	:U.K.	**2)GRESSANI, Francis R.**
(86) International Application No	:NA	**3)ROBINSON, Brian**
Filing Date	:NA	
(87) International Publication No	: NA	
(61) Patent of Addition to Application Number	:NA	
Filing Date	:NA	
(62) Divisional to Application Number	:NA	
Filing Date	:NA	

(57) Abstract :
An ECU assembly (100) includes one or more electrical connectors (20, 21) received in a protective cover (40). The cover (40) includes an introduction aperture (45) through which the connector or connectors can be introduced into the cover, and at least one connection aperture (44, 46) through which the or each connector is connected to the ECU. A retaining portion (50, 51) of the cover at each connection aperture (44, 46) is interposed between the respective connector (20, 21) and the ECU (1) to retain the cover (40) to the ECU (1) in its use position.

No. of Pages : 28 No. of Claims : 14

(12) PATENT APPLICATION PUBLICATION
(21) Application No.202014051757 A
(19) INDIA
(22) Date of filing of Application :27/11/2020
(43) Publication Date : 11/06/2021

(54) Title of the invention : METHOD FOR DETERMINING THE DETECTION THRESHOLD OF A RADAR SUITED TO A GIVEN ENVIRONMENT

(51) International classification	:G01S0007410000, G01S0007400000, G01S0013720000, G01S0007350000, G01S0013910000	(71)**Name of Applicant :** **1)THALES** Address of Applicant :TOUR CARPE DIEM, Place des Corolles - Esplanade Nord - 92400 COURBEVOIE, FRANCE France
(31) Priority Document No	:1913836	(72)**Name of Inventor :**
(32) Priority Date	:06/12/2019	**1)KEMKEMIAN, Stphane**
(33) Name of priority country	:France	**2)CORRETJA, Vincent**
(86) International Application No	:NA	**3)MACHHOUR, Sabrina**
Filing Date	:NA	
(87) International Publication No	: NA	
(61) Patent of Addition to Application Number	:NA	
Filing Date	:NA	
(62) Divisional to Application Number	:NA	
Filing Date	:NA	

(57) Abstract :
The invention relates to a method for determining the detection threshold of a radar suited to a given environment, characterized in that it comprises at least: - a step (22) in which a set of statistical quantities characterizing said environment is selected; - a step (24) in which a set of functions is defined, each of said functions giving an intermediate detection threshold that is a function of statistical quantities taken from a subset of said set of statistical quantities; - a step (25) of combination of said intermediate detection thresholds, said detection threshold being the result of said combination. Figure for the abstract: Fig. 2

No. of Pages : 17 No. of Claims : 10

(12) PATENT APPLICATION PUBLICATION
(19) INDIA
(22) Date of filing of Application :27/11/2020
(21) Application No.202014051836 A
(43) Publication Date : 11/06/2021

(54) Title of the invention : AGENT MANAGEMENT DEVICE, PROGRAM, AND AGENT MANAGEMENT METHOD

(51) International classification	:H04L0012240000, H04Q0003000000, A61K0038550000, A61K0031715000, A61K0036185000
(31) Priority Document No	:2019-222932
(32) Priority Date	:10/12/2019
(33) Name of priority country	:Japan
(86) International Application No	:NA
Filing Date	:NA
(87) International Publication No	: NA
(61) Patent of Addition to Application Number	:NA
Filing Date	:NA
(62) Divisional to Application Number	:NA
Filing Date	:NA

(71)**Name of Applicant :**
1)TOYOTA JIDOSHA KABUSHIKI KAISHA
Address of Applicant :1, Toyota-cho, Toyota-shi, Aichi-ken, 471-8571, Japan Japan
(72)**Name of Inventor :**
1)MAEDA, Eiichi

(57) Abstract :
An agent management device includes a processor configured to: generate a response to an inquiry from an occupant of a moving body; determine whether or not a change in a control content of the moving body to correspond to the response is possible; output a question whether or not to execute the change to the control content to the occupant when determining that the change to the control content is possible; and execute the change to the control content when the occupant approves the change to the control content.

No. of Pages : 48 No. of Claims : 20

(12) PATENT APPLICATION PUBLICATION
(19) INDIA
(22) Date of filing of Application :30/11/2020
(21) Application No.202014052044 A
(43) Publication Date : 11/06/2021

(54) Title of the invention : INSTRUMENT FOR ELECTROSURGICAL TREATMENT

(51) International classification	:A61B0018000000, A61B0018140000, A61B0018040000, A61B0018120000, A61M0025000000
(31) Priority Document No	:19213828.7
(32) Priority Date	:05/12/2019
(33) Name of priority country	:EUROPEAN UNION
(86) International Application No	:NA
Filing Date	:NA
(87) International Publication No	: NA
(61) Patent of Addition to Application Number	:NA
Filing Date	:NA
(62) Divisional to Application Number	:NA
Filing Date	:NA

(71)**Name of Applicant :**
1)ERBE ELEKTROMEDIZIN GMBH
Address of Applicant :Waldhoernlestrasse 17, 72072 Tuebingen, Germany Germany
(72)**Name of Inventor :**
1)KELLER Sandra
2)EDERER Michael
3)ENDERLE Markus

(57) Abstract :
The invention refers to an instrument for thermal treatment of tissue (34), particularly for electrosurgical treatment and particularly for argon plasma coagulation. The instrument has an instrument body (25) extending be-tween a proximal end (27) and a distal end (28). In an end section (38) adjoining a distal end (28) the instrument body (25) comprises at least one color mark (39) in a de-fined color. This color corresponds to the color of a treated tissue (34) that is created, if the dosage of an energy introduction for achieving a desired depth effect in the tissue (34) has been selected correctly. Preferably the instrument is configured as probe (17), particularly as endoscope probe and has a flexible bendable instrument body (25) that can be referenced as instrument hose (26). (Figure 2)

No. of Pages : 29 No. of Claims : 15

(12) PATENT APPLICATION PUBLICATION
(19) INDIA
(22) Date of filing of Application :01/12/2020
(21) Application No.202014052345 A
(43) Publication Date : 11/06/2021

(54) Title of the invention : ELEVATOR GROUP MANAGEMENT SYSTEM

(51) International classification	:B66B0003000000, B66B0001240000, B66B0001180000, B66B0003020000, G06F0003120000
(31) Priority Document No	:2019-221390
(32) Priority Date	:06/12/2019
(33) Name of priority country	:Japan
(86) International Application No	:NA
Filing Date	:NA
(87) International Publication No	: NA
(61) Patent of Addition to Application Number	:NA
Filing Date	:NA
(62) Divisional to Application Number	:NA
Filing Date	:NA

(71)**Name of Applicant :**
1)TOSHIBA ELEVATOR KABUSHIKI KAISHA
Address of Applicant :72-34, Horikawa-cho, Saiwai-ku, Kawasaki-shi, Kanagawa 212-0013, Japan Japan
(72)**Name of Inventor :**
1)Keiichi Nakanishi

(57) Abstract :
ABSTRACT According to one embodiment, the elevator group management system, managing a plurality of cars, selecting an optimum car of the cars based on a passenger's destination floor registered by a hall destination controller installed on an arbitrary floor, and making the car respond to the registration floor as an allocated car, includes display control means holding allocation information indicative of a destination floor and an allocated car for each passenger performing a registration operation on the hall destination controller as history information, and displaying the history information on a part of a display unit provided in the hall destination controller.

No. of Pages : 39 No. of Claims : 11

(12) PATENT APPLICATION PUBLICATION
(19) INDIA
(22) Date of filing of Application :01/12/2020
(21) Application No.202014052347 A
(43) Publication Date : 11/06/2021

(54) Title of the invention : YARN HANDLING DEVICE

(51) International classification	:H04N0005232000, F16D0048020000, G01N0003508000, B65H0069060000, B65H0051160000
(31) Priority Document No	:2019-222239
(32) Priority Date	:09/12/2019
(33) Name of priority country	:Japan
(86) International Application No	:NA
Filing Date	:NA
(87) International Publication No	: NA
(61) Patent of Addition to Application Number	:NA
Filing Date	:NA
(62) Divisional to Application Number	:NA
Filing Date	:NA

(71)**Name of Applicant :**
1)TMT Machinery, Inc.
Address of Applicant :6th Fl., Osaka Green Bldg., 2-6-26 Kitahama, Chuo-ku, Osaka-shi, Osaka 541-0041, Japan Japan
(72)**Name of Inventor :**
1)Yusuke RIYAMA

(57) Abstract :
ABSTRACT OF THE DISCLOSURE YARN HANDLING DEVICE An object of the present invention is to provide a yarn handling device which is small in size and the state of which is switchable between a state in which a yarn is sucked and captured and a state in which the yarn is pinched and captured. A yarn handling device 7 includes a fluid supply passage 85 to which compressed air is supplied, a first capturing mechanism 81 which is able to suck and capture a yarn Y by means of the negative pressure generated when the compressed air is supplied to the fluid supply passage 85, and a second capturing mechanism 82 which is able to pinch and capture the yarn Y. The second capturing mechanism 82 is in a capturing state in which the yarn Y can be pinched and captured when the compressed air is not supplied to the fluid supply passage 85, whereas the second capturing mechanism 82 is switched from the capturing state into an unlocked state in which the yarn Y is not pinched when the compressed air is supplied to the fluid supply passage 85.

No. of Pages : 59 No. of Claims : 5

(12) PATENT APPLICATION PUBLICATION
(19) INDIA
(22) Date of filing of Application :01/12/2020
(21) Application No.202014052350 A
(43) Publication Date : 11/06/2021

(54) Title of the invention : ELEVATOR CONTROLLING APPARATUS AND ELEVATOR CONTROLLING METHOD

(51) International classification	:B66B0001240000, H04W0004020000, G06Q0010020000, G06Q0050300000, H04W0076100000
(31) Priority Document No	:2019-221793
(32) Priority Date	:09/12/2019
(33) Name of priority country	:Japan
(86) International Application No	:NA
Filing Date	:NA
(87) International Publication No	: NA
(61) Patent of Addition to Application Number	:NA
Filing Date	:NA
(62) Divisional to Application Number	:NA
Filing Date	:NA

(71)**Name of Applicant :**
1)TOSHIBA ELEVATOR KABUSHIKI KAISHA
Address of Applicant :72-34, Horikawa-cho, Saiwai-ku, Kawasaki-shi, Kanagawa, Japan Japan
(72)**Name of Inventor :**
1)Yuki ARAI

(57) Abstract :
operation mode in which no response is made to a hall call. ABSTRACT A left-behind passenger detector (503) detects a passenger who does not get into a car as a left-behind passenger upon the car arriving at floors. A first passenger car stay time measurer (505) measures a first passenger car stay time which is a stay time of a first passenger in the car. Upon a registration information of a first passenger car call being acquired, upon determination that the car is not full, upon detection of the left-behind passenger, and upon the first passenger car stay time exceeding a prescribed first determination time, an operation mode switcher (507A-507F) switches to and holds a first special operation mode until completion of a response to the first passenger car call, the first special operation mode in which no response is made to a hall call. [Selected Figure] Fig. 2

No. of Pages : 34 No. of Claims : 8

(12) PATENT APPLICATION PUBLICATION
(19) INDIA
(22) Date of filing of Application :01/12/2020
(21) Application No.202014052353 A
(43) Publication Date : 11/06/2021

(54) Title of the invention : NEURAL NETWORK PROCESSOR, CHIP AND ELECTRONIC DEVICE

(51) International classification	:G06N0003080000, G06N0003063000, G06N0003040000, H01F0017000000, G05D0023190000
(31) Priority Document No	:201911253027.0
(32) Priority Date	:09/12/2019
(33) Name of priority country	:China
(86) International Application No	:NA
Filing Date	:NA
(87) International Publication No	: NA
(61) Patent of Addition to Application Number	:NA
Filing Date	:NA
(62) Divisional to Application Number	:NA
Filing Date	:NA

(71)**Name of Applicant :**
1)GUANGDONG OPPO MOBILE TELECOMMUNICATIONS CORP., LTD.
Address of Applicant :No.18, Haibin Road, Wusha, Chang'an, Dongguan, Guangdong 523860, China. China
(72)**Name of Inventor :**
1)Shengguang YUAN

(57) Abstract :
NEURAL NETWORK PROCESSOR, CHIP AND ELECTRONIC DEVICE The embodiments of the disclosure provide a neural network processor (200), a chip (20) and an electronic device (20). The neural network processor (200) includes a convolution processing unit (212), a vector processing unit (214), and an instruction issue module (220). The convolution processing unit (212) and the vector processing unit (214) are both connected to the instruction issue module (220). The instruction issue module (220) is configured to issue a plurality of instructions to the convolution processing unit (212) and the vector processing unit (214) in parallel. The embodiments of the application can improve the efficiency of the neural network processor (220) processing data

No. of Pages : 54 No. of Claims : 15

(12) PATENT APPLICATION PUBLICATION
(19) INDIA
(22) Date of filing of Application :02/12/2020
(21) Application No.202014052491 A
(43) Publication Date : 11/06/2021

(54) Title of the invention : IMPROVED MEDICAL DEVICE FOR GLAUCOMA SURGERY WITH CONTROLLED AND MODULABLE FILTRATION

(51) International classification	:A61M0005310000, A61F0009007000, A61M0025000000, A61B0017160000, A61M0025010000
(31) Priority Document No	:IT 102019000023106
(32) Priority Date	:05/12/2019
(33) Name of priority country	:Italy
(86) International Application No	:NA
Filing Date	:NA
(87) International Publication No	: NA
(61) Patent of Addition to Application Number	:NA
Filing Date	:NA
(62) Divisional to Application Number	:NA
Filing Date	:NA

(71)**Name of Applicant :**
1)CECCHINI, Paolo
Address of Applicant :Via Fabio Filzi, 21/1, I-34132 TRIESTE, ITALY Italy
2)ZOVATTO, Luigino
(72)**Name of Inventor :**
1)CECCHINI, Paolo
2)ZOVATTO, Luigino

(57) Abstract :
ABSTRACT Title of the Invention:- IMPROVED MEDICAL DEVICE FOR GLAUCOMA SURGERY WITH CONTROLLED AND MODULABLE FILTRATION • A medical device for glaucoma surgery comprising a tubular body provided with a through cavity extending from a proximal end to a distal end, wherein at the proximal end the body comprises a first proximal positioning means of the device, wherein on the distal end side the tubular body comprises a second distal positioning means of the device. The tubular body comprises at least one proximal filtration hole, located on the side of the proximal end, and at least one distal filtration hole, located on the side of the distal end, said proximal and distal holes being fluidically connected to each other by means of said through cavity. The proximal and distal filtration holes are at least partially or completely occluded by a membrane made of resorbable material which can be removed at least partially by selective action, so as to allow the selective variation of the amount of aqueous humour flow removable via said through cavity. Figure: 1

No. of Pages : 39 No. of Claims : 17

(12) PATENT APPLICATION PUBLICATION
(19) INDIA
(22) Date of filing of Application :03/12/2020
(21) Application No.202014052637 A
(43) Publication Date : 11/06/2021

(54) Title of the invention : SET OF ELECTRICAL PROTECTION DEVICES WITH TWO LEVELS THAT ARE CONNECTED IN SERIES

(51) International classification	:H01L0027120000, H02H0007260000, H01L0027020000, H01H0071240000, G01R0031500000
(31) Priority Document No	:1913809
(32) Priority Date	:05/12/2019
(33) Name of priority country	:France
(86) International Application No	:NA
Filing Date	:NA
(87) International Publication No	: NA
(61) Patent of Addition to Application Number	:NA
Filing Date	:NA
(62) Divisional to Application Number	:NA
Filing Date	:NA

(71)**Name of Applicant :**
1)Schneider Electric Industries SAS
Address of Applicant :35 rue Joseph Monier, 92500 Rueil Malmaison - FRANCE France
(72)**Name of Inventor :**
1)RIVAL Marc
2)LISNYAK Marina

(57) Abstract :
The present invention relates to a set of electrical protection devices with two levels that are connected in series, the first level including a circuit breaker that is referred to as the first or upstream circuit breaker and the second level including one or more circuit breakers referred to as second or downstream circuit breakers (8), which are 10 connected in parallel with respect to one another. This set is characterized in that the trip for the upstream circuit breaker (1), instead of including what are referred to as instantaneous protection means, includes, firstly, a first trip chain making it possible to adjust the long-delay trip curve for inverse time and the short-delay trip curve with a no-trip time and, secondly, a second trip chain 15 including an optical sensor (9) that is capable of discerning light between 300 and 450 nm by eliminating visible and infrared light so as to eliminate the light that is characteristic of gas jets emitted by the one or more circuit breakers referred to as downstream circuit breakers (8) during a switching operation, and means for simultaneously measuring the current level and the maximum threshold of light emitted 20 at the busbars, this second trip chain being capable of causing the upstream circuit breaker (1) to trip when the current exceeds a predetermined value and the light emitted exceeds a predetermined threshold for emitted light

No. of Pages : 21 No. of Claims : 10

(12) PATENT APPLICATION PUBLICATION
(19) INDIA
(22) Date of filing of Application :03/12/2020
(21) Application No.202014052658 A
(43) Publication Date : 11/06/2021

(54) Title of the invention : PRE-PROCESSING OF SUGAR CANE

(51) International classification	:A01D0045100000, C13B0010060000, H04N0019850000, A01C0011000000, C13B0020120000
(31) Priority Document No	:2019904607
(32) Priority Date	:05/12/2019
(33) Name of priority country	:Australia
(86) International Application No	:NA
Filing Date	:NA
(87) International Publication No	: NA
(61) Patent of Addition to Application Number	:NA
Filing Date	:NA
(62) Divisional to Application Number	:NA
Filing Date	:NA

(71)**Name of Applicant :**
1)Fitzmaurice, Alan Lewis
Address of Applicant :c/- Intellepro, GPO Box 1339, Brisbane QLD 4001, Australia Australia
(72)**Name of Inventor :**
1)Fitzmaurice, Alan Lewis

(57) Abstract :
A system 10 for infield collection of substantially whole cane and delivering that cane to a mill via a trash separator and a washer. A harvester 11 collects whole cane and throws billeted cane along with trash into an infield transporter 12 which then transports this to a centralised trash separator 13. The trash separator may service any number of infield transporters and may be located at a mill or at another centralised location so that output from the trash separator may pass on to a conveyor 14. Billets 15 are then fed to a washer 16. The washing liquid from downstream process may be used in the washer. This liquid enters the washer at 17. Mud and dirt is removed from the billets in return liquid at 18 which then passes to a mud removal unit 19 of conventional form. This juice is returned to the downstream process along line 20. It will be appreciated that since whole cane is being transported to a dedicated trash separator at 13 that there is very little loss in terms of juice carrying cane. The billets are moved on to the mill at 21. They will move to the first stage mill usually via a conveyor. Wash liquid may also be collected via an outlet conveyor from the washer. A modular harvester, a trash separator and a washer are also described.

No. of Pages : 34 No. of Claims : 26

(12) PATENT APPLICATION PUBLICATION
(19) INDIA
(22) Date of filing of Application :03/12/2020
(21) Application No.202014052697 A
(43) Publication Date : 11/06/2021

(54) Title of the invention : DISPLAY DEVICE

(51) International classification	:G06F0003041000, G02B0027010000, G09F0009300000, B60K0035000000, G09G0005000000	(71)**Name of Applicant :** **1)LG Display Co., Ltd** Address of Applicant :128, Yeoui-daero, Yeongdeungpo-gu, Seoul, 07336, Republic of Korea Republic of Korea
(31) Priority Document No	:2019-219414	(72)**Name of Inventor :** **1)Ye, Jae-Hun**
(32) Priority Date	:04/12/2019	
(33) Name of priority country	:Japan	
(86) International Application No	:NA	
Filing Date	:NA	
(87) International Publication No	: NA	
(61) Patent of Addition to Application Number	:NA	
Filing Date	:NA	
(62) Divisional to Application Number	:NA	
Filing Date	:NA	

(57) Abstract :
A display device (1) includes a piezoelectric element (10) vibrated according to input audio signals, a display panel (20) configured to display an image, and an elastic member (30) configured to connect a portion of the piezoelectric element (10) and the display panel (20) so as to transmit a vibration of the piezoelectric element (10) to the display panel (20) to improve sound quality in a display device (1) which emits a sound from a display panel (20).

No. of Pages : 36 No. of Claims : 33

(12) PATENT APPLICATION PUBLICATION
(19) INDIA
(22) Date of filing of Application :03/12/2020
(21) Application No.202014052707 A
(43) Publication Date : 11/06/2021

(54) Title of the invention : PORTABLE COMMUNICATION DEVICE INCLUDING DISPLAY

(51) International classification	:H04M0001725000, H04M0001020000, H01Q0001240000, H04M0001230000, H04M0001040000
(31) Priority Document No	:10-2019-0160970
(32) Priority Date	:05/12/2019
(33) Name of priority country	:Republic of Korea
(86) International Application No	:NA
Filing Date	:NA
(87) International Publication No	: NA
(61) Patent of Addition to Application Number	:NA
Filing Date	:NA
(62) Divisional to Application Number	:NA
Filing Date	:NA

(71)**Name of Applicant :**
1)SAMSUNG ELECTRONICS CO., LTD.
Address of Applicant :129, Samsung-ro, Yeongtong-gu, Suwon-si, Gyeonggi-do 16677, Republic of Korea Republic of Korea
(72)**Name of Inventor :**
1)Jeong WOO
2)Jungchul AN

(57) Abstract :
PORTABLE COMMUNICATION DEVICE INCLUDING DISPLAY A portable communication device includes: a foldable housing, a flexible display accommodated in the housing and including a first display area that remains substantially flat in a state in which the housing is folded and a second display area that is bendable as the housing is folded, a support located between the flexible display and the housing and including a first area corresponding to the first display area and having a first flexibility and a second area corresponding to the second display area and having a second flexibility greater than the first flexibility, wherein an opening is formed in the first area , and a sensing module accommodated in the housing and including a light receiving sensor at least partially aligned with the opening to sense light passing through the opening. FIG. 2

No. of Pages : 64 No. of Claims : 20

(12) PATENT APPLICATION PUBLICATION
(19) INDIA
(22) Date of filing of Application :04/12/2020
(21) Application No.202014052830 A
(43) Publication Date : 11/06/2021

(54) Title of the invention : SOUND SOURCE SIGNAL SEPARATOR AND MUSIC SYNC LOW FREQUENCY STIMULATOR COMPRISING THE SAME

(51) International classification	:A61N0001360000, H04R0003000000, G01V0001133000, H04N0019122000, A61H0023020000
(31) Priority Document No	:10-2019-0161617
(32) Priority Date	:06/12/2019
(33) Name of priority country	:Republic of Korea
(86) International Application No	:NA
Filing Date	:NA
(87) International Publication No	: NA
(61) Patent of Addition to Application Number	:NA
Filing Date	:NA
(62) Divisional to Application Number	:NA
Filing Date	:NA

(71)**Name of Applicant :**
1)CERAGEM Co., Ltd.
Address of Applicant :10, Jeongja 1-gil, Seonggeo-eup, Seobuk-gu, Cheonan-si, Chungcheongnam-do 31045 Republic of Korea Republic of Korea
(72)**Name of Inventor :**
1)Park, Yong son
2)Lee, Dong Myoung
3)KIM, Yong Hee
4)HONG, Seung Gwan

(57) Abstract :
SOUND SOURCE SIGNAL SEPARATOR AND MUSIC SYNC LOW FREQUENCY STIMULATOR COMPRISING THE SAME
The present invention provides a music sync low frequency stimulator including a speaker for outputting a plurality of first sound source signals, a sound source signal separator for separating at least one of the plurality of first sound source signals, a low frequency signal generator for generating a low frequency signal, and a music sync unit for controlling the strength and frequency of a low frequency signal according to at least one of second sound source signals separated by the sound source signal separator.

No. of Pages : 27 No. of Claims : 20

(12) PATENT APPLICATION PUBLICATION
(21) Application No.202014052998 A
(19) INDIA
(22) Date of filing of Application :04/12/2020
(43) Publication Date : 11/06/2021

(54) Title of the invention : ELECTRIC MACHINE CONTROL METHOD, ELECTRIC MACHINE CONTROL APPARATUS AND VEHICLE

(51) International classification	:D06F0033000000, H02P0025220000, H02K0009060000, B60K0001000000, H02P0027080000
(31) Priority Document No	:201911242564.5
(32) Priority Date	:06/12/2019
(33) Name of priority country	:China
(86) International Application No	:NA
Filing Date	:NA
(87) International Publication No	: NA
(61) Patent of Addition to Application Number	:NA
Filing Date	:NA
(62) Divisional to Application Number	:NA
Filing Date	:NA

(71)**Name of Applicant :**
1)BOSCH AUTOMOTIVE PRODUCTS (SUZHOU) CO. LTD.
Address of Applicant :126 Su Hong Xi Road, Suzhou Industrial Park Suzhou, Jiangsu 215021, China China
(72)**Name of Inventor :**
1)ZHAN, Kang

(57) Abstract :
The present application provides an electric machine control method, an electric machine control apparatus and a vehicle. The electric machine control method is used for a vehicle driven by an electric machine, and comprises: acquiring a vehicle speed, a vehicle drive signal and a vehicle braking signal; if the vehicle speed is less than a predetermined value and the vehicle drive signal and the vehicle braking signal 10 are both present, commanding the electric machine to output a driving force according to the vehicle drive signal while the vehicle speed is less than the predetermined value. The electric machine control method, electric machine control apparatus and vehicle of the present application have advantages such as simplicity, reliability, ease of implementation, and smooth operation, and can offer an improved experience of 15 starting on a ramp.

No. of Pages : 17 No. of Claims : 10

(12) PATENT APPLICATION PUBLICATION
(19) INDIA
(22) Date of filing of Application :07/12/2020
(21) Application No.202014053155 A
(43) Publication Date : 11/06/2021

(54) Title of the invention : CONTROLLER

(51) International classification	:A61F0007000000, B65B0059020000, B24B0051000000, B02C0025000000, G05B0011280000
(31) Priority Document No	:2019-221814
(32) Priority Date	:09/12/2019
(33) Name of priority country	:Japan
(86) International Application No	:NA
Filing Date	:NA
(87) International Publication No	: NA
(61) Patent of Addition to Application Number	:NA
Filing Date	:NA
(62) Divisional to Application Number	:NA
Filing Date	:NA

(71)**Name of Applicant :**
1)DENSO CORPORATION
Address of Applicant :1-1, Showa-cho, Kariya-city, Aichi-pref., 448-8661 Japan Japan
(72)**Name of Inventor :**
1)SEKI, Naoto
2)YAMADA, Naoyuki
3)Syed, Mohamed Mohamed Kuthbudeen

(57) Abstract :
A vehicle (MV) includes a pump (130) configured to discharge a fuel by reciprocating a plunger (135), a rail (150) configured to store the fuel discharged from the pump, and a fuel injection valve (170) configured to inject the fuel supplied from the rail. A controller for the vehicle includes a waveform obtaining unit (11) and a phase shift obtaining unit (12). The waveform obtaining unit is configured to obtain a waveform of a fuel pressure in the rail as a function of time in a predetermined period. The phase shift obtaining unit (12) is configured to obtain a phase shift based on the waveform obtained by the waveform obtaining unit. The phase shift is an offset between a timing the plunger reciprocated in the pump arrives at a first position and a timing a piston reciprocating in an internal combustion engine arrives at a second position.

No. of Pages : 48 No. of Claims : 12

(12) PATENT APPLICATION PUBLICATION
(19) INDIA
(22) Date of filing of Application :07/12/2020
(21) Application No.202014053205 A
(43) Publication Date : 11/06/2021

(54) Title of the invention : GROUP CONTROL DEVICE FOR LIFTING DEVICES

(51) International classification	:A61G0007100000, B66B0001240000, B66C0001660000, B66C0013560000, B66C0001020000
(31) Priority Document No	:2019-222234
(32) Priority Date	:09/12/2019
(33) Name of priority country	:Japan
(86) International Application No	:NA
Filing Date	:NA
(87) International Publication No	: NA
(61) Patent of Addition to Application Number	:NA
Filing Date	:NA
(62) Divisional to Application Number	:NA
Filing Date	:NA

(71)**Name of Applicant :**
1)TOSHIBA ELEVATOR KABUSHIKI KAISHA
Address of Applicant :72-34, Horikawa-cho, Saiwai-ku, Kawasaki-shi, Kanagawa 212-0013, Japan Japan
(72)**Name of Inventor :**
1)Masatomo NAKAGAWA

(57) Abstract :
A group control device for lifting devices is disclosed. A decision unit decides a ranking for each combination of a zone and a lifting device, the zone being a group of a plurality of consecutive floors, the decision being performed based on a total number of 5 door openings and closings for each of a plurality of lifting devices per zone. An allocation unit allocates, based on the ranking, one or more of the lifting devices to one of the zones. A command unit transmits a command to set, as a standby floor of the one or more of the lifting devices, any of a plurality of floors included in the zone having been allocated to the one or more of the lifting devices, the command being transmitted to a 10 single unit control device that controls the one or more of the lifting devices.

No. of Pages : 56 No. of Claims : 6

(12) PATENT APPLICATION PUBLICATION
(19) INDIA
(22) Date of filing of Application :07/12/2020
(21) Application No.202014053209 A
(43) Publication Date : 11/06/2021

(54) Title of the invention : SYSTEMS AND METHODS FOR AUTOMATED TRADING

(51) International classification	:G06Q0040060000, G06Q0040000000, G06Q0040040000, G06N0003080000, G06N0003040000
(31) Priority Document No	:201911050190
(32) Priority Date	:05/12/2019
(33) Name of priority country	:India
(86) International Application No	:NA
Filing Date	:NA
(87) International Publication No	: NA
(61) Patent of Addition to Application Number	:NA
Filing Date	:NA
(62) Divisional to Application Number	:NA
Filing Date	:NA

(71)**Name of Applicant :**
1)UST Global Inc.
Address of Applicant :5 Polaris Way, Aliso Viejo, California 92656 (US) U.S.A.
2)UST Global (Singapore) Pte. Ltd.
(72)**Name of Inventor :**
1)THOMAS, Kurien Cherian

(57) Abstract :
A system configured to: (a) retrieve structured and unstructured data from one or more external data sources, the structured data including time-series data on a financial instrument and the unstructured data including words; (b) analyze the unstructured data to determine a sentiment measure for the financial instrument; (c) analyze the structured data to obtain a training dataset; (d) train a neural network model with the training dataset such that the neural network can provide a predicted price of the financial instrument for a future timestamp; and (e) provide a decision for managing the financial instrument based at least in part on the sentiment measure for the financial instrument, the predicted price of the financial instrument, and a current holding of the financial instrument.

No. of Pages : 35 No. of Claims : 14

(12) PATENT APPLICATION PUBLICATION
(19) INDIA
(22) Date of filing of Application :07/12/2020
(21) Application No.202014053212 A
(43) Publication Date : 11/06/2021

(54) Title of the invention : HELICOPTER ROTOR MECHANICAL BRAKING SYSTEM

(51) International classification :F16D0055000000, B62L0003020000, F16D0121140000, F16D0049160000, B60L0007260000
(31) Priority Document No :2019139975
(32) Priority Date :06/12/2019
(33) Name of priority country :Russia
(86) International Application No :NA
Filing Date :NA
(87) International Publication No : NA
(61) Patent of Addition to Application Number:NA
Filing Date :NA
(62) Divisional to Application Number :NA
Filing Date :NA

(71)**Name of Applicant :**
1)Joint Stock Company «National helicopter center Mil & Kamov»
Address of Applicant :26/1 Garshin street, Tomilino work settlement, Lyubertsy, Moscow region, 140070, Russian Federation Russia
(72)**Name of Inventor :**
1)KALININ, Yaroslav Vladimirovich
2)NIKONCHUK, Natalya Vik torovna
3)PLUSHCHEVSKIY, Alexey Mikhailovich
4)FOMIN, Artem Alexandrovich

(57) Abstract :
The mechanical braking system of the helicopter rotors contains a brake control lever, a brake cover, a brake drum, a caliper, two brake shoes, a brake lever, a roller connected to the brake lever and kinematically connected to the brake shoes, a micro-switch and wiring connecting the brake control lever to the brake lever. Mechanical braking system the rotors of a helicopter fitted with bracket with micro-switch, mounted on the lid of the brake, a roller mounted on the caliper, the caliper is provided with a tappet with a return spring, the brake cover is made with the axle and grooves in the roller and the pusher, the caliper is made with the possibility of rotation of the axle in conjunction with the brake drum when you grip it with the brake shoes, the wiring associated with the brake lever via a spring-loaded tip, and the brake control lever is made with the possibility of fixing it on the control panel when the brake shoes are engaged with the brake drum. The technical result is to increase the reliability of the helicopter operation and the safety of using the braking devices of the helicopter rotor drive system in the event of unforeseen situations before takeoff, in flight and after landing.

No. of Pages : 21 No. of Claims : 4

(12) PATENT APPLICATION PUBLICATION
(21) Application No.202014053469 A
(19) INDIA
(22) Date of filing of Application :08/12/2020
(43) Publication Date : 11/06/2021

(54) Title of the invention : BATTERY CELL MODULE FOR A BATTERY AND METHOD FOR PRODUCING BATTERY CELL MODULE

(51) International classification	:H01M0002100000, H01M0002020000, H01M0010040000, H01M0002200000, H01M0010613000
(31) Priority Document No	:102019219258.0
(32) Priority Date	:10/12/2019
(33) Name of priority country	:Germany
(86) International Application No	:NA
Filing Date	:NA
(87) International Publication No	: NA
(61) Patent of Addition to Application Number	:NA
Filing Date	:NA
(62) Divisional to Application Number	:NA
Filing Date	:NA

(71)**Name of Applicant :**
1)ROBERT BOSCH GMBH
Address of Applicant :Postfach 30 02 20, 70442 Stuttgart, Germany Germany
(72)**Name of Inventor :**
1)MEINCKE, Georg
2)FOMEN, Gilles Desmond
3)LOGES, Iryna
4)MAENNER, Manuel
5)SCHIEFER, Peter

(57) Abstract :
BATTERY CELL MODULE FOR A BATTERY AND METHOD FOR PRODUCING BATTERY CELL MODULE The present subject matter relates to a battery cell module (1) for a battery, 5 comprises a module base body (2) with a plurality of receiving cavities (3), wherein a battery cell (4) of the battery cell module (1) is arranged in each of the receiving cavities (3), an electrical coupling device (5) comprises a plurality of electrical conductors (6), wherein the battery cells (4) are electrically coupled to one another via the electrical conductors (6), as well as a cooling device (7) for cooling the battery cells (4), wherein 10 the cooling device (7) is arranged on a first base body side (8) of the module base body (2). A deformable heat conducting medium (9) is arranged between the cooling device (7) and the battery cells (4) such that the battery cells (4) are thermally coupled to the cooling device (7) via the heat conducting medium (9).

No. of Pages : 23 No. of Claims : 10

(12) PATENT APPLICATION PUBLICATION
(19) INDIA
(22) Date of filing of Application :15/12/2020
(21) Application No.202014054609 A
(43) Publication Date : 11/06/2021

(54) Title of the invention : APPARATUS AND METHOD FOR PULSE CYCLE PRESSURE MODULATION AND VARIABLE PRESSURE THERAPY

(51) International classification	:A61H0009000000, A61B0005021000, A61K0045060000, A61B0005026000, A61B0005145500
(31) Priority Document No	:GC 2019-38780
(32) Priority Date	:04/12/2019
(33) Name of priority country	:U.S.A.
(86) International Application No	:NA
Filing Date	:NA
(87) International Publication No	: NA
(61) Patent of Addition to Application Number	:NA
Filing Date	:NA
(62) Divisional to Application Number	:NA
Filing Date	:NA

(71)**Name of Applicant :**
1)SYNCARDON LLC
Address of Applicant :110, Ceton CT, Broomall, Pennsylvania, 19008 USA U.S.A.
(72)**Name of Inventor :**
1)VIKAS KHURANA
2)JOEL STEINBERG

(57) Abstract :
The present invention relates to an apparatus for pulse cycle pressure modulation and variable pressure therapy in a cardio synchronous manner to improve blood flow. The invention applies a combination of positive pressure to a portion of the body and negative or variable pressure to a portion of the body. In particular, the invention uses a sequential and gradient pulse wave for treating wounds that are difficult to heal or livelihood limiting claudication and/or ischemic rest pain. The invention also comprises integrated methods to determine blood flow and effects of treatments on tissue.

No. of Pages : 44 No. of Claims : 21

(12) PATENT APPLICATION PUBLICATION
(19) INDIA
(22) Date of filing of Application :27/02/2020
(21) Application No.202017008408 A
(43) Publication Date : 11/06/2021

(54) Title of the invention : NASAL APPARATUS AND METHOD OF DRUG DELIVERY USING SAID NASAL APPARATUS

(51) International classification	:A61F 5/08, A61M 29/00, A62B 23/06
(31) Priority Document No	:201811031808
(32) Priority Date	:24/08/2018
(33) Name of priority country	:India
(86) International Application No	:PCT/EP2019/072644
Filing Date	:23/08/2019
(87) International Publication No	:WO 2020/039095
(61) Patent of Addition to Application Number	:NA
Filing Date	:NA
(62) Divisional to Application Number	:NA
Filing Date	:NA

(71)**Name of Applicant :**
1)NASAL MEDICAL LIMITED
Address of Applicant :Guinness Enterprise Centre Taylor's Lane Dublin, 8 Ireland
(72)**Name of Inventor :**
1)O'CONNELL, Martin
2)YEAGER, Keith

(57) Abstract :
The present invention relates to a nasal apparatus which improves respiration by expanding the nasal airways and preferably, the apparatus comprises a filter to block irritating or harmful particles. The apparatus of the present invention is preferably, configured to retain the filter on the apparatus while providing comfort for the user to wear the apparatus. In another aspect of the present invention, the invention also relates to a method of delivering a therapy intradermally or intramucousally including a therapy such as a medicament including drug delivery, delivery of essential oils or any desirable therapy that can be delivered intradermally or intramucousally through the nasal mucous membranes.

No. of Pages : 26 No. of Claims : 28

(12) PATENT APPLICATION PUBLICATION
(19) INDIA
(22) Date of filing of Application :08/06/2020
(21) Application No.202017024019 A
(43) Publication Date : 11/06/2021

(54) Title of the invention : TRANSFORM SELECTION IN A VIDEO ENCODER AND/OR VIDEO DECODER

(51) International classification	:H04N 19/12, H04N 19/159, H04N 19/186, H04N 19/176, H04N 19/61
(31) Priority Document No	:62/697484
(32) Priority Date	:13/07/2018
(33) Name of priority country	:U.S.A.
(86) International Application No	:PCT/EP2019/068548
Filing Date	:10/07/2019
(87) International Publication No	:WO 2020/011860
(61) Patent of Addition to Application Number	:NA
Filing Date	:NA
(62) Divisional to Application Number	:NA
Filing Date	:NA

(71)**Name of Applicant :**
1)TELEFONAKTIEBOLAGET LM ERICSSON (PUBL)
Address of Applicant :SE-164 83 Stockholm Sweden
(72)**Name of Inventor :**
1)YU, Ruoyang
2)ZHANG, Zhi
3)SJ–BERG, Rickard

(57) Abstract :
A process for selecting a transform set for a prediction block. The process can be used in both an encoder and a decoder. For example, the process can be used in both an encoder and a decoder for a prediction block that has been predicted from a reference block. In some embodiments, both the prediction block and the reference block are intra blocks.

No. of Pages : 20 No. of Claims : 23

(12) PATENT APPLICATION PUBLICATION
(19) INDIA
(22) Date of filing of Application :09/06/2020
(21) Application No.202017024151 A
(43) Publication Date : 11/06/2021

(54) Title of the invention : INSULATING GLAZING UNIT

(51) International classification :E06B 3/66
(31) Priority Document No :18172066.5
(32) Priority Date :14/05/2018
(33) Name of priority country :EPO
(86) International Application No :PCT/EP2019/061758
Filing Date :08/05/2019
(87) International Publication No :WO 2019/219461
(61) Patent of Addition to Application Number :NA
Filing Date :NA
(62) Divisional to Application Number :NA
Filing Date :NA

(71)**Name of Applicant :**
1)SAINT-GOBAIN GLASS FRANCE
Address of Applicant :12 Place de l'Iris Tour Saint-Gobain 92400 Courbevoie France
(72)**Name of Inventor :**
1)HOLTSTIEGE, Thomas
2)DR–GE, Alicia
3)EFFERTZ, Christian
4)MARJAN, Christopher

(57) Abstract :
The invention relates to an insulating glazing unit (1), comprising at least two glass panes (4a, 4b) and a spacer profile (5) arranged between same and running around close to the edges thereof, for use in a window (2), a door or a facade glazing (10), which has a respective frame (3) engaging around the edges of the insulating glazing, in particular a metal frame, wherein at least one RFID transponder (9, 9a-9d) is attached to the insulating glazing unit as an identification element, characterised in that the/at least one transponder is arranged on an inner surface of one of the glass panes in a spacing range between the spacer profile and the edge of the glass pane.

No. of Pages : 8 No. of Claims : 8

(12) PATENT APPLICATION PUBLICATION
(19) INDIA
(22) Date of filing of Application :09/06/2020
(21) Application No.202017024177 A
(43) Publication Date : 11/06/2021

(54) Title of the invention : METHOD FOR DECODING IMAGE ON BASIS OF CCLM PREDICTION IN IMAGE CODING SYSTEM, AND DEVICE THEREFOR

(51) International classification	:H04N 19/11, H04N 19/593, H04N 19/132, H04N 19/186, H04N 19/70
(31) Priority Document No	:62/770835
(32) Priority Date	:23/11/2018
(33) Name of priority country	:U.S.A.
(86) International Application No	:PCT/KR2019/015253
Filing Date	:11/11/2019
(87) International Publication No	:WO 2020/105925
(61) Patent of Addition to Application Number	:NA
Filing Date	:NA
(62) Divisional to Application Number	:NA
Filing Date	:NA

(71)**Name of Applicant :**
1)LG ELECTRONICS INC.
Address of Applicant :128, Yeoui-daero, Yeongdeungpo-gu Seoul 07336 Republic of Korea
(72)**Name of Inventor :**
1)CHOI, Jangwon
2)HEO, Jin
3)KIM, Seunghwan
4)YOO, Sunmi
5)LI, Ling
6)CHOI, Jungah

(57) Abstract :
A video decoding method performed by a decoding apparatus according to the 5 present disclosure includes deriving one of a plurality of cross-component linear model (CCLM) prediction mode as a CCLM prediction mode of the current chroma block, deriving a sample number of neighboring chroma samples of the current chroma block based on the CCLM prediction mode of the current chroma block, a size of the current chroma block, and a specific value; deriving the neighboring chroma samples of the 10 sample number, calculating CCLM parameters based on the neighboring chroma samples and the down sampled neighboring luma samples, deriving prediction samples for the current chroma block based on the CCLM parameters and the down sampled luma samples and generating reconstructed samples for the current chroma block based on the prediction samples, wherein the specific value is derived as 2.

No. of Pages : 140 No. of Claims : 15

(12) PATENT APPLICATION PUBLICATION
(19) INDIA
(22) Date of filing of Application :11/06/2020
(21) Application No.202017024647 A
(43) Publication Date : 11/06/2021

(54) Title of the invention : SAFETY-ENHANCED CAN LID

(51) International classification :B65D 17/28
(31) Priority Document No :10-2018-0083998
(32) Priority Date :19/07/2018
(33) Name of priority country :Republic of Korea
(86) International Application No :PCT/KR2019/008339
Filing Date :08/07/2019
(87) International Publication No :WO 2020/017802
(61) Patent of Addition to Application Number :NA
Filing Date :NA
(62) Divisional to Application Number :NA
Filing Date :NA

(71)**Name of Applicant :**
1)SON, Kijung
Address of Applicant :304Ho, 5-2, Hyeonggokdong-ro 2-gil Gumi-si Gyeongsangbuk-do 39320 Republic of Korea
(72)**Name of Inventor :**
1)SON, Kijung

(57) Abstract :
The present invention relates a safety-enhanced can lid and, more particularly, to a safety-enhanced can lid which is provided with a prevention part for preventing a user's hand from being cut by the boundary of the lid, coupled to a can so as to seal same, and thereby allows safe use. To this end, the can lid which is coupled to the top of a container having contents stored therein, according to the present invention, comprises: a flat plate which is installed so as to cover the top of the container and has a can tab provided on the top surface thereof; and a hand cut prevention part comprising a cut prevention wall which is bent downwards from the boundary of the plate towards the side of the container.

No. of Pages : 14 No. of Claims : 4

(12) PATENT APPLICATION PUBLICATION
(19) INDIA
(22) Date of filing of Application :15/06/2020
(21) Application No.202017025060 A
(43) Publication Date : 11/06/2021

(54) Title of the invention : CYCLOHEXENE PROPANAL DERIVATIVES AS PERFUMING INGREDIENTS

(51) International classification	:C11B 9/00, A61K 8/35, A61Q 13/00, C07C 47/225, C11D 3/50
(31) Priority Document No	:18178947.0
(32) Priority Date	:21/06/2018
(33) Name of priority country	:EPO
(86) International Application No	:PCT/EP2019/066362
Filing Date	:20/06/2019
(87) International Publication No	:WO 2019/243506
(61) Patent of Addition to Application Number	:NA
Filing Date	:NA
(62) Divisional to Application Number	:NA
Filing Date	:NA

(71)**Name of Applicant :**
1)FIRMENICH SA
Address of Applicant :1, route des Jeunes PO Box 239 1211 GENEVA 8 Switzerland
(72)**Name of Inventor :**
1)QUINTAINE, Julie
2)MORETTI, Robert

(57) Abstract :
The present invention concerns a compound of formula (I) in the form of any one of its stereoisomers or a mixture thereof, and wherein R1, R2, R3 and R4 independently from each other, represent a hydrogen atom or a C1-2 alkyl group. The use of compound of formula (I) as perfuming ingredients of floral type and the invention's compounds as part of a perfuming composition or of a perfuming consumer product are also part of the present invention.

No. of Pages : 31 No. of Claims : 13

(12) PATENT APPLICATION PUBLICATION
(19) INDIA
(22) Date of filing of Application :18/06/2020
(21) Application No.202017025688 A
(43) Publication Date : 11/06/2021

(54) Title of the invention : VANILLA COMPOSITION

(51) International classification	:A23L 27/00, A23L 27/10, A23L 27/20
(31) Priority Document No	:PCT/CN2018/108581
(32) Priority Date	:29/09/2018
(33) Name of priority country	:China
(86) International Application No	:PCT/EP2019/076477
Filing Date	:30/09/2019
(87) International Publication No	:WO 2020/065097
(61) Patent of Addition to Application Number	:NA
Filing Date	:NA
(62) Divisional to Application Number	:NA
Filing Date	:NA

(71)**Name of Applicant :**
1)FIRMENICH SA
Address of Applicant :1, route des Jeunes PO Box 239 1211 GENEVA 8 Switzerland
(72)**Name of Inventor :**
1)BILLAT-ROSSI, Maryline
2)SALORD, Patrick
3)SHEN, Echo, Hong
4)YUAN, Yong, Ming

(57) Abstract :
The present invention relates to a composition for conferring, enhancing or imparting a vanilla note comprising 2-hydroxy-4-methoxybenzaldehyde and vanillin imparted compound selected from the group of 3-ethoxy-4-hydroxybenzaldehyde or 4- hydroxy-3-ethoxybenzaldehyde and to a perfumed or flavored consumer product comprising the invention's composition. Moreover, the present invention concerns an extract comprising at least 10 % of 2-hydroxy-4-methoxybenzaldehydeand a method to improve, enhance or modify the vanilla flavour profile of a composition using said extract.

No. of Pages : 34 No. of Claims : 21

(12) PATENT APPLICATION PUBLICATION
(21) Application No.202017025774 A
(19) INDIA
(22) Date of filing of Application :18/06/2020
(43) Publication Date : 11/06/2021

(54) Title of the invention : ENERGY ABSORBING DEVICE ADAPTED FOR A MILD IMPACT OF AN AIRCRAFT,UAV,EQUIPPED WITH A PARACHUTE

(51) International classification	:B64D 17/34, B64D 17/36, B64D 17/54, B64D 17/80	(71)**Name of Applicant :** **1)GIANNAKOPOULOS, Pavlos** Address of Applicant :Mezonos & Zaimi Str. P.O.Box 3075 26 001 Patra Greece
(31) Priority Document No	:20180100506	
(32) Priority Date	:02/11/2018	(72)**Name of Inventor :** **1)GIANNAKOPOULOS, Pavlos**
(33) Name of priority country	:Greece	
(86) International Application No	:PCT/GR2019/000068	
Filing Date	:10/10/2019	
(87) International Publication No	:WO 2020/089660	
(61) Patent of Addition to Application Number	:NA	
Filing Date	:NA	
(62) Divisional to Application Number	:NA	
Filing Date	:NA	

(57) Abstract :
An energy absorbing device provided at the parachute riser strap of an aircraft, UAV, etc., adapted to reduce the otherwise high forces resulting from the weight of the aircraft, the speed of descent and, ultimately, the speed of impact, activated by the pilot or by means of the photoelectric cell attached underneath the aircraft measuring the distance from the ground.

No. of Pages : 14 No. of Claims : 7

(12) PATENT APPLICATION PUBLICATION
(19) INDIA
(22) Date of filing of Application :19/06/2020
(21) Application No.202017025994 A
(43) Publication Date : 11/06/2021

(54) Title of the invention : METHOD FOR PREPARING VINYL CYAN COMPOUND-CONJUGATED DIENE COMPOUND-AROMATIC VINYL COMPOUND GRAFT COPOLYMER AND THERMOPLASTIC RESIN COMPOSITION COMPRISING GRAFT COPOLYMER

(51) International classification	:C08F 279/02, C08F 6/18
(31) Priority Document No	:10-2018-0161808
(32) Priority Date	:14/12/2018
(33) Name of priority country	:Republic of Korea
(86) International Application No	:PCT/KR2019/013802
Filing Date	:21/10/2019
(87) International Publication No	:WO 2020/122407
(61) Patent of Addition to Application Number	:NA
Filing Date	:NA
(62) Divisional to Application Number	:NA
Filing Date	:NA

(71)**Name of Applicant :**
1)LG CHEM, LTD.
Address of Applicant :128, Yeoui-daero Yeongdeungpo-gu Seoul 07336 Republic of Korea
(72)**Name of Inventor :**
1)SUK, Jae Min
2)KIM, Yoo Vin
3)KIM, Young Min
4)LEE, Jin Hyoung
5)HAN, Sujeong
6)JEONG, Young Hwan
7)PARK, Changhong
8)HEO, Jaewon

(57) Abstract :
The present invention relates to a method of preparing a graft copolymer and a thermoplastic resin composition including the graft copolymer. More specifically, the 5 present invention relates to a method of preparing a graft copolymer, the method including a step of performing coagulation by adding an acid coagulant to 100 parts by weight (based on solids) of graft copolymer latex prepared by graft-polymerizing an aromatic vinyl compound and a vinyl 10 cyanide compound onto conjugated diene rubber latex; and a step of performing coagulation once more by adding a salt coagulant thereto. According to the present invention, when the method is used to prepare a graft copolymer, coagulation efficiency 15 may be improved and the gloss of the prepared graft copolymer may be increased. In addition, since a b-value measured using a Hunter lab colorimeter and a b-value measured after being left at 250 °C for 15 minutes are low, the graft copolymer may have excellent color 20 characteristics. In addition, since heating loss is low and 57 scorch time is long, the graft copolymer may have excellent processing characteristics.

No. of Pages : 50 No. of Claims : 13

(12) PATENT APPLICATION PUBLICATION
(21) Application No.202017026255 A
(19) INDIA
(22) Date of filing of Application :22/06/2020
(43) Publication Date : 11/06/2021

(54) Title of the invention : HIGH-ALUMINA MELT-CASTED REFRACTORY AND METHOD FOR MANUFACTURING SAME

(51) International classification	:C04B 35/107, C03B 5/43, F27D 1/00
(31) Priority Document No	:2019-036722
(32) Priority Date	:28/02/2019
(33) Name of priority country	:Japan
(86) International Application No	:PCT/JP2019/031871
Filing Date	:13/08/2019
(87) International Publication No	:WO 2020/174719
(61) Patent of Addition to Application Number	:NA
Filing Date	:NA
(62) Divisional to Application Number	:NA
Filing Date	:NA

(71)**Name of Applicant :**
1)SAINT-GOBAIN TM K.K.
Address of Applicant :3-7 Kojimachi, Chiyoda-ku, Tokyo 1020083 Japan
(72)**Name of Inventor :**
1)ABE, Koya
2)SUGIYAMA, Hiroshi
3)TSUCHIYA, Shinji
4)HASHIMOTO, Itaru
5)MISU, Yasuo

(57) Abstract :
The present invention provides: a high-alumina casted refractory which can be manufactured easily and has a small porosity and high corrosion resistance; and a method for manufacturing the high-alumina casted refractory. The high-alumina casted refractory according to the present invention has the following chemical composition: 95.0 to 99.5% by mass of Al2O3, 0.20 to 1.50% by mass of SiO2, 0.05 to 1.50% by mass of B2O3, 0.05 to 1.20% by mass of MgO, and a remainder. The method for manufacturing a high-alumina casted refractory according to the present invention comprises: mixing an Al2O3 raw material, an SiO2 raw material, a B2O3 raw material and an MgO raw material together to produce a mixture; and melting the mixture.

No. of Pages : 15 No. of Claims : 10

(12) PATENT APPLICATION PUBLICATION
(21) Application No.202017026258 A
(19) INDIA
(22) Date of filing of Application :22/06/2020
(43) Publication Date : 11/06/2021

(54) Title of the invention : METHOD FOR PRODUCING TRIFLUOROMETHYL THIOALKYL COMPOUND, AND COMPOSITION OF TRIFLUOROMETHYL THIOALKYL HALIDE COMPOUND

(51) International classification	:C07C 319/14, C07C 323/03
(31) Priority Document No	:2018-084522
(32) Priority Date	:25/04/2018
(33) Name of priority country	:Japan
(86) International Application No	:PCT/JP2019/016449
Filing Date	:17/04/2019
(87) International Publication No	:WO 2019/208355
(61) Patent of Addition to Application Number	:NA
Filing Date	:NA
(62) Divisional to Application Number	:NA
Filing Date	:NA

(71)**Name of Applicant :**
1)KUMIAI CHEMICAL INDUSTRY CO., LTD.
Address of Applicant :4-26, Ikenohata 1-chome, Taito-ku, Tokyo 1108782 Japan
(72)**Name of Inventor :**
1)YASUMURA Shingo

(57) Abstract :
A method for producing a trifluoromethyl thioalkyl halide compound represented by formula (1) (wherein X1 represents a halogen atom selected from the group consisting of a fluorine atom, a chlorine atom, a bromine atom and an iodine atom; and n represents an integer of 1 to 10), the method being characterized by comprising adding thiophosgene while heating at 45°C or higher in the presence of a dihalogenated alkyl compound represented by formula (2) (wherein X2 represents a halogen atom selected from the group consisting of a fluorine atom, a chlorine atom, a bromine atom and an iodine atom; and X1 and n are as defined above) and a fluorine compound.

No. of Pages : 51 No. of Claims : 11

(12) PATENT APPLICATION PUBLICATION
(19) INDIA
(22) Date of filing of Application :23/06/2020
(21) Application No.202017026440 A
(43) Publication Date : 11/06/2021

(54) Title of the invention : CAMP RECEPTOR PROTEIN MUTANT AND METHOD FOR PREPARING L-AMINO ACID BY USING SAME

(51) International classification	:C07K 14/195, C12N 15/70, C12P 13/04, C12P 13/08, C12P 13/22
(31) Priority Document No	:10-2018-0151043
(32) Priority Date	:29/11/2018
(33) Name of priority country	:Republic of Korea
(86) International Application No	:PCT/KR2019/009292
Filing Date	:25/07/2019
(87) International Publication No	:WO 2020/111437
(61) Patent of Addition to Application Number	:NA
Filing Date	:NA
(62) Divisional to Application Number	:NA
Filing Date	:NA

(71)**Name of Applicant :**
1)CJ CHEILJEDANG CORPORATION
Address of Applicant :330, Dongho-ro, Jung-gu, Seoul 04560 Republic of Korea
(72)**Name of Inventor :**
1)LEE, Seok Myung
2)CHEONG, Ki Yong
3)SEO, Chang Il
4)LEE, Ji Sun

(57) Abstract :
The present application relates to a CAMP receptor protein mutant, a microorganism comprising same, and a method for preparing L-amino acid by using same.

No. of Pages : 30 No. of Claims : 11

(12) PATENT APPLICATION PUBLICATION
(19) INDIA
(22) Date of filing of Application :25/06/2020
(21) Application No.202017026909 A
(43) Publication Date : 11/06/2021

(54) Title of the invention : FIRE GRATE

(51) International classification	:F23H 3/02, F23H 7/14
(31) Priority Document No	:2018-004543U
(32) Priority Date	:22/11/2018
(33) Name of priority country	:Japan
(86) International Application No	:PCT/JP2019/026978
Filing Date	:08/07/2019
(87) International Publication No	:WO 2020/105217
(61) Patent of Addition to Application Number	:NA
Filing Date	:NA
(62) Divisional to Application Number	:NA
Filing Date	:NA

(71)**Name of Applicant :**
1)MITSUBISHI HEAVY INDUSTRIES ENVIRONMENTAL & CHEMICAL ENGINEERING CO., LTD.
Address of Applicant :4-2, Minatomirai 4-chome, Nishi-ku, Yokohama-shi, Kanagawa 2200012 Japan
(72)**Name of Inventor :**
1)ODAKA Shigeki
2)NAKAHARAI Hiroyuki
3)ODANO Takahiro
4)MATSUDA Hiroki
5)NAGAHARA Shunichi

(57) Abstract :
Provided is a fire grate (1) having: an upper wall (2) that extends in a first direction (D); a front wall (3) that extends downward from a tip of the upper wall (2); a flow passage (S) that is provided on the backside of the upper wall (2); and a partition wall (8) that vertically partitions the flow passage (S), and that has a partition wall body (9) having a main surface facing the upper wall (2) and having a plurality of cooling holes (10) formed in the partition wall body (9) for impingement-cooling the upper wall (2) by allowing a cooling refrigerant to be jetted therethrough toward the backside of the upper wall 2.

No. of Pages : 28 No. of Claims : 10

(12) PATENT APPLICATION PUBLICATION
(19) INDIA
(22) Date of filing of Application :25/06/2020
(21) Application No.202017026923 A
(43) Publication Date : 11/06/2021

(54) Title of the invention : FINGERPRINT REGISTRATION METHOD AND ELECTRONIC DEVICE USING THE SAME

(51) International classification :G06K 9/00
(31) Priority Document No :62/656367
(32) Priority Date :12/04/2018
(33) Name of priority country :U.S.A.
(86) International Application No :PCT/CN2019/082121
Filing Date :10/04/2019
(87) International Publication No :WO 2019/196882
(61) Patent of Addition to Application Number :NA
Filing Date :NA
(62) Divisional to Application Number :NA
Filing Date :NA

(71)**Name of Applicant :**
1)EGIS TECHNOLOGY INC.
Address of Applicant :2F, No. 360, Rueiguang Rd., Neihu District, Taipei, Taiwan 11492 China
(72)**Name of Inventor :**
1)CHIANG, Yuan-Lin
2)FAN, Yuan-Chang

(57) Abstract :
A fingerprint registration method and an electronic device using the same are provided. The fingerprint registration method includes the following steps: sequentially obtaining a plurality of swipe frames of a fingerprint by a fingerprint sensor; sequentially analyzing the swipe frames by a processor to obtain a plurality of feature points; sequentially merging the feature points of the swipe frames into pre-registration data by the processor; sequentially updating a completion area displayed on a user interface by the processor according to relative position relationships of the feature points of the swipe frames; and determining whether the pre-registration data satisfies a preset completion condition by the processor, so as to determine whether to end the fingerprint registration.

No. of Pages : 14 No. of Claims : 10

(12) PATENT APPLICATION PUBLICATION
(21) Application No.202017026924 A
(19) INDIA
(22) Date of filing of Application :25/06/2020
(43) Publication Date : 11/06/2021

(54) Title of the invention : LITHIUM ION BATTERY SEPARATOR

(51) International classification	:H01M 2/16, C08J 9/26, C08J 9/36, H01G 11/52, H01G 11/58	(71)**Name of Applicant :** **1)ASAHI KASEI KABUSHIKI KAISHA** Address of Applicant :1-1-2 Yurakucho, Chiyoda-ku, Tokyo 1000006 Japan
(31) Priority Document No	:2018-192964	(72)**Name of Inventor :**
(32) Priority Date	:11/10/2018	**1)ZHANG, Xun**
(33) Name of priority country	:Japan	**2)KUROKI, Ryo**
(86) International Application No	:PCT/JP2019/040342	**3)FUKUNAGA, Yuki**
Filing Date	:11/10/2019	**4)KOBAYASHI, Hiromi**
(87) International Publication No	:WO 2020/075865	
(61) Patent of Addition to Application Number	:NA	
Filing Date	:NA	
(62) Divisional to Application Number	:NA	
Filing Date	:NA	

(57) Abstract :
Provided are: a production method for a power storage device separator, including a step in which a porous body formed from a sheet-shaped molded body including a silane-modified polyolefin is brought in contact with a base solution or an acid solution; and a power storage device separator including a microporous membrane having a melting/rupture temperature of 180-220°C as measured using thermomechanical analysis (TMA).

No. of Pages : 77 No. of Claims : 31

(12) PATENT APPLICATION PUBLICATION
(19) INDIA
(22) Date of filing of Application :25/06/2020
(21) Application No.202017026942 A
(43) Publication Date : 11/06/2021

(54) Title of the invention : BUS BAR ASSEMBLY

(51) International classification	:H01M 2/20, H01M 10/48, H01M 2/10, H01M 2/26
(31) Priority Document No	:10-2018-0087149
(32) Priority Date	:26/07/2018
(33) Name of priority country	:Republic of Korea
(86) International Application No	:PCT/KR2019/009064
Filing Date	:23/07/2019
(87) International Publication No	:WO 2020/022735
(61) Patent of Addition to Application Number	:NA
Filing Date	:NA
(62) Divisional to Application Number	:NA
Filing Date	:NA

(71)**Name of Applicant :**
1)LG CHEM, LTD.
Address of Applicant :128,Yeoui-daero Yeongdeungpo-Gu Seoul 07336 Republic of Korea
(72)**Name of Inventor :**
1)YOON, Doo Han
2)CHOI, Jong Woon
3)YANG, Jae Hun

(57) Abstract :
Disclosed is a bus bar assembly including a frame, a plurality of sensing bus bars integrally provided on the frame, an inter bus bar configured to connect any one pair of sensing bus bars, among the plurality of sensing bus bars, to each other; and a terminal bus bar configured to connect any one of the plurality of sensing bus bars to an external terminal..

No. of Pages : 19 No. of Claims : 9

(12) PATENT APPLICATION PUBLICATION
(21) Application No.202017027045 A
(19) INDIA
(22) Date of filing of Application :25/06/2020
(43) Publication Date : 11/06/2021

(54) Title of the invention : METHOD AND SYSTEM FOR PROVIDING EMERGENCY RESCUE REQUEST AND LOSS PREVENTION

(51) International classification	:G08B 21/02, G08B 21/24, G08B 27/00, G08B 21/18
(31) Priority Document No	:10-2018-0074445
(32) Priority Date	:28/06/2018
(33) Name of priority country	:Republic of Korea
(86) International Application No	:PCT/KR2019/004327
Filing Date	:11/04/2019
(87) International Publication No	:WO 2020/004783
(61) Patent of Addition to Application Number	:NA
Filing Date	:NA
(62) Divisional to Application Number	:NA
Filing Date	:NA

(71)**Name of Applicant :**
1)EHI
Address of Applicant :(Uman-dong) 2nd Floor, 11-3, World cup-ro 357beon-gil, Paldal-gu, Suwon-si, Gyeonggi-do 16234 Republic of Korea
(72)**Name of Inventor :**
1)OH, Seung Jin
2)KIM, Sang Uk

(57) Abstract :
The present invention relates to a method and a system for providing an emergency rescue request and loss prevention, and the method can comprise the steps of: allowing an electronic device connected to a portable device through BLE communication to check an operation mode activation signal; allowing the electronic device to activate a loss prevention mode so as to output an alarm if the operation mode activation signal confirms that the strength of a BLE signal transmitted from the portable device is less than or equal to a threshold value; and allowing the electronic device to activate an emergency rescue request mode so as to transmit, to a pre-stored contact number, a message generated on the basis of data about an external environment obtained from a camera and/or a microphone provided in the electronic device, if the operation mode activation signal is generated from outside the portable device. In addition, other embodiments are applicable.

No. of Pages : 23 No. of Claims : 15

(12) PATENT APPLICATION PUBLICATION
(19) INDIA
(22) Date of filing of Application :26/06/2020
(21) Application No.202017027258 A
(43) Publication Date : 11/06/2021

(54) Title of the invention : APPARATUS AND METHOD FOR TRANSMITTING ASSISTANCE INFORMATION IN A WIRELESS COMMUNICATION SYSTEM

(51) International classification	:H04W 72/04, H04W 24/10
(31) Priority Document No	:1815917.8
(32) Priority Date	:28/09/2018
(33) Name of priority country	:U.K.
(86) International Application No	:PCT/KR2019/012739
Filing Date	:30/09/2019
(87) International Publication No	:WO 2020/067834
(61) Patent of Addition to Application Number	:NA
Filing Date	:NA
(62) Divisional to Application Number	:NA
Filing Date	:NA

(71)**Name of Applicant :**
1)SAMSUNG ELECTRONICS CO., LTD.
Address of Applicant :129, Samsung-ro, Yeongtong-gu Suwon-si, Gyeonggi-do 16677 Republic of Korea
(72)**Name of Inventor :**
1)VAN DER VELDE, Himke

(57) Abstract :
The present disclosure relates to a communication method and system for converging a 5th-Generation (5G) communication system or networks beyond 5G communication system for supporting higher data rates beyond a 4th-Generation (4G) system with a technology for Internet of Things (IoT). The present disclosure may be applied to intelligent services based on the 5G communication technology and the IoT-related technology, such as smart home, smart building, smart city, smart car, connected car, health care, digital education, smart retail, security and safety services. Disclosed is a method of a User Equipment, UE, in a wireless communication system, the method comprising: receiving, from a base station, configuration information on reporting assistance information associated with an overheating; detecting the overheating; and transmitting, to the base station, the assistance information including first information for controlling a bandwidth associated with at least one of a first frequency range or a second frequency range based on UE's preference, wherein a first frequency corresponding to the first frequency range is smaller from a second frequency corresponding to the second frequency range.

No. of Pages : 30 No. of Claims : 15

(12) PATENT APPLICATION PUBLICATION
(21) Application No.202017027591 A
(19) INDIA
(22) Date of filing of Application :29/06/2020
(43) Publication Date : 11/06/2021

(54) Title of the invention : BWP SWITCHING METHOD AND APPARATUS, AND TERMINAL DEVICE

(51) International classification :H04W 72/04
(31) Priority Document No :201810646706.3
(32) Priority Date :21/06/2018
(33) Name of priority country :China
(86) International Application No :PCT/CN2019/085834
Filing Date :07/05/2019
(87) International Publication No :WO 2019/242419
(61) Patent of Addition to Application Number :NA
Filing Date :NA
(62) Divisional to Application Number :NA
Filing Date :NA

(71)**Name of Applicant :**
1)GUANGDONG OPPO MOBILE TELECOMMUNICATIONS CORP., LTD.
Address of Applicant :No. 18, Haibin Road Wusha, Chang'an Dongguan, Guangdong 523860 China
(72)**Name of Inventor :**
1)SHI, Cong

(57) Abstract :
The embodiments of the present application provide a BWP switching method and apparatus, and a terminal device. The method comprises: a terminal device acquiring first configuration information, wherein the first configuration information comprises first resource information and identifier information of a first search space, the first resource information is used for initiating a random access process, the identifier information of the first search space is used for detecting a downlink control channel, the first configuration information corresponds to a first BWP, and the first search space corresponds to a second BWP; and where the first BWP is in an activated state, the terminal device switching the second BWP to an activated state or maintaining the second BWP in an activated state, and executing the random access process on the first BWP and the second BWP.

No. of Pages : 20 No. of Claims : 14

(12) PATENT APPLICATION PUBLICATION
(19) INDIA
(22) Date of filing of Application :10/09/2020
(21) Application No.202017039166 A
(43) Publication Date : 11/06/2021

(54) Title of the invention : MULTIPORT PLATE FOR A BIOPROCESS BAG

(51) International classification :C12M 1/00, C12M 1/12
(31) Priority Document No :62/660295
(32) Priority Date :20/04/2018
(33) Name of priority country :U.S.A.
(86) International Application No :PCT/EP2019/059917
Filing Date :17/04/2019
(87) International Publication No :WO 2019/201990
(61) Patent of Addition to Application Number :NA
Filing Date :NA
(62) Divisional to Application Number :NA
Filing Date :NA

(71)**Name of Applicant :**
1)GLOBAL LIFE SCIENCES SOLUTIONS USA LLC
Address of Applicant :100 Results Way Marlborough, Massachusetts 01752 U.S.A.
2)GE HEALTHCARE BIO-SCIENCES AB
(72)**Name of Inventor :**
1)MILLER, Michael, Jason
2)SAUKKONEN, Hanna-Leena

(57) Abstract :
The invention relates to a a single-use flexible bioreactor bag comprising a rigid multiport plate sealed to a side wall of said bioreactor bag, wherein said multiport plate comprises a plurality of ports. The invention further relates to a method of manufacturing the bag and to a method of installing the bag in a rigid support vessel.

No. of Pages : 7 No. of Claims : 17

(12) PATENT APPLICATION PUBLICATION
(21) Application No.202017040810 A
(19) INDIA
(22) Date of filing of Application :21/09/2020
(43) Publication Date : 11/06/2021

(54) Title of the invention : ROTARY DRIVEN FIRING MEMBERS WITH DIFFERENT ANVIL AND CHANNEL ENGAGEMENT FEATURES

(51) International classification	:A61B 17/068, A61B 17/29
(31) Priority Document No	:62/649291
(32) Priority Date	:28/03/2018
(33) Name of priority country	:U.S.A.
(86) International Application No	:PCT/IB2019/052570
Filing Date	:28/03/2019
(87) International Publication No	:WO 2019/186472
(61) Patent of Addition to Application Number	:NA
Filing Date	:NA
(62) Divisional to Application Number	:NA
Filing Date	:NA

(71)**Name of Applicant :**
1)ETHICON LLC
Address of Applicant :#475 Street C, Suite 401 Los Frailes Industrial Park Guaynabo, USA, 00969 U.S.A.
(72)**Name of Inventor :**
1)SHELTON, IV, Frederick E.
2)HARRIS, Jason L.
3)BAXTER, III, Chester O.
4)BAKOS, Gregory J.

(57) Abstract :
A surgical end effector that includes a channel that is configured to operably support a surgical staple cartridge therein and an anvil that is movable between an open position and a closed position. A rotary driven firing member is configured to move axially between a starting position and an ending position. The rotary driven firing member includes at least one anvil engagement member that is configured to engage the anvil and at least one channel engagement member that is configured to engage the channel. The anvil engagement members may differ in size and length from the channel engagement members. The channel engagement members may have different channel engagement surfaces thereon that are formed at angles relative to each other.

No. of Pages : 118 No. of Claims : 20

(12) PATENT APPLICATION PUBLICATION
(21) Application No.202017045402 A
(19) INDIA
(22) Date of filing of Application :19/10/2020
(43) Publication Date : 11/06/2021

(54) Title of the invention : ANODE ACTIVE MATERIAL FOR SECONDARY BATTERY, ANODE COMPRISING SAME, AND METHOD FOR MANUFACTURING SAME

(51) International classification	:H01M0004360000, H01M0004587000, H01M0010052500, H01M0004133000, H01M0004020000
(31) Priority Document No	:10-2018-0163075
(32) Priority Date	:17/12/2018
(33) Name of priority country	:Republic of Korea
(86) International Application No	:PCT/KR2019/017411
Filing Date	:10/12/2019
(87) International Publication No	:WO 2020/130465
(61) Patent of Addition to Application Number	:NA
Filing Date	:NA
(62) Divisional to Application Number	:NA
Filing Date	:NA

(71)**Name of Applicant :**
1)LG CHEM, LTD.
Address of Applicant :128, Yeoui-daero, Yeongdeungpo-Gu, Seoul 07336 Republic of Korea
(72)**Name of Inventor :**
1)CHOI, Hee Won
2)KIM, Je Young
3)WOO, Sang Wook
4)PIAO, Li Lin

(57) Abstract :
The present invention relates to an anode active material for a secondary battery, which has improved cycle swelling properties and rapid charge performance, an anode comprising same, and a method for manufacturing same. The anode active material is a mixture of artificial graphite and spherical natural graphite, wherein the spherical natural graphite has an average particle diameter (D 50) of 12 or less, with D 90-D 10 value ranging from 5 to 12.

No. of Pages : 38 No. of Claims : 10

(12) PATENT APPLICATION PUBLICATION
(21) Application No.202017054012 A
(19) INDIA
(22) Date of filing of Application :11/12/2020
(43) Publication Date : 11/06/2021

(54) Title of the invention : BENZIMIDAZOLE COMPOUND OR SALT THEREOF, AGRICULTURAL AND HORTICULTURAL INSECTICIDAL AND ACARICIDAL AGENT CONTAINING SAID COMPOUND, AND METHOD FOR USING SAME

(51) International classification	:A61P0033140000, A01N0043900000, C07D0413040000, C07D0487040000, A01N0043520000
(31) Priority Document No	:2018-097629
(32) Priority Date	:22/05/2018
(33) Name of priority country	:Japan
(86) International Application No	:PCT/JP2019/020325
Filing Date	:22/05/2019
(87) International Publication No	:WO 2019/225663
(61) Patent of Addition to Application Number	:NA
Filing Date	:NA
(62) Divisional to Application Number	:NA
Filing Date	:NA

(71)**Name of Applicant :**
1)NIHON NOHYAKU CO., LTD.
Address of Applicant :19-8, Kyobashi 1-Chome, Chuo-ku, Tokyo 1048386 Japan
(72)**Name of Inventor :**
1)FUJIHARA, Hirokazu
2)ABE, Yutaka
3)TANAKA, Ryosuke
4)FUCHI, Shunsuke

(57) Abstract :
The present invention addresses the problem of developing and providing a novel agricultural and horticultural insecticidal and acaricidal agent for crop production, such as agricultural and horticultural, in view of factors such as damage caused by pests that is currently severe and the emergence of pests resistant to existing agents. The present invention provides: a benzimidazole compound or a salt thereof represented by general formula (1) [Compound 1] {In the formula, R denotes an alkyl group or the like, R1 denotes a haloalkyl group or the like, X denotes an oxygen atom or the like, and m and n are 0 etc.}; an agricultural and horticultural insecticidal and acaricidal agent containing said compound as an active ingredient; and a method for using same.

No. of Pages : 115 No. of Claims : 8

(12) PATENT APPLICATION PUBLICATION
(19) INDIA
(22) Date of filing of Application :14/12/2020
(21) Application No.202017054333 A
(43) Publication Date : 11/06/2021

(54) Title of the invention : A CLIENT-SERVER COMPUTER SYSTEM

(51) International classification	:H04L0009000000, H04L0029060000, H04L0009080000, H04L0009320000, G06F0016951000
(31) Priority Document No	:1900354.0
(32) Priority Date	:10/01/2019
(33) Name of priority country	:U.K.
(86) International Application No	:PCT/GB2019/053490
Filing Date	:10/12/2019
(87) International Publication No	:WO 2020/144449
(61) Patent of Addition to Application Number	:NA
Filing Date	:NA
(62) Divisional to Application Number	:NA
Filing Date	:NA

(71)**Name of Applicant :**
1)CITY, UNIVERSITY OF LONDON
Address of Applicant :Research and Enterprise Office Drysdale Building E213 Northampton Square London Greater London EC1V 0HB U.K.
(72)**Name of Inventor :**
1)TAHIR, Shahzaib
2)RAJARAJAN, Muttukrishnan

(57) Abstract :
A client-server computer system (10) for a client (12) to search for a keyword in at least partially homomorphically encrypted documents (18) stored in a server (14) is disclosed. The client-server computer system (10) is configured as follows. The client (12) applies probabilistic symmetric encryption to a keyword to form a probabilistically encrypted keyword to form a first result. The client (12) applies deterministic symmetric encryption to the keyword to form a deterministically encrypted keyword, then computes a modular inverse of the deterministically encrypted keyword, and then applies at least partially homomorphic encryption to the modular inverse deterministically encrypted keyword to form a second result. The client (12) uses a session key to hash the first result to form a hash result. The client (12) combines the first result and second result to form a third result. The client (12) encrypts the third result and the hash result using a private key to generate the search query. The client (12) sends the search query to the server (14). The server (14) receives the search query from the client (12). The server (14) identifies at least one identifier of at least one document of the at least partially homomorphically encrypted documents including the keyword by decrypting, using a public key, a product of the search query and the hash result. The server (14) sends the at least one identifier in encrypted form to the client (12). The client (12) decrypts the at least one identifier.

No. of Pages : 22 No. of Claims : 25

(12) PATENT APPLICATION PUBLICATION
(19) INDIA
(22) Date of filing of Application :17/12/2020
(21) Application No.202017054897 A
(43) Publication Date : 11/06/2021

(54) Title of the invention : POLYMERASES, COMPOSITIONS, AND METHODS OF USE

(51) International classification	:C12N0009120000, A61K0009140000, C12Q0001686000, A61K0009000000, C12Q0001684400
(31) Priority Document No	:62/775662
(32) Priority Date	:05/12/2018
(33) Name of priority country	:U.S.A.
(86) International Application No	:PCT/US2019/064524
Filing Date	:04/12/2019
(87) International Publication No	:WO 2020/117968
(61) Patent of Addition to Application Number	:NA
Filing Date	:NA
(62) Divisional to Application Number	:NA
Filing Date	:NA

(71)**Name of Applicant :**
1)ILLUMINA, INC.
Address of Applicant :5200 Illumina Way San Diego, California 92122 U.S.A.
2)ILLUMINA CAMBRIDGE LIMITED
3)ILLUMINA SINGAPORE PTE. LTD.
(72)**Name of Inventor :**
1)KLAUSING, Kay
2)GHOMI, Hamed Tabatabaei
3)GOLYNSKIY, Misha
4)NIRANTAR, Saurabh
5)MCDONALD, Seth
6)PEISAJOVICH, Sergio

(57) Abstract :
Presented herein are altered polymerase enzymes for improved incorporation of nucleotides and nucleotide analogues, in particular altered polymerases that maintain high fidelity under reduced incorporation times, as well as methods and kits using the same.

No. of Pages : 52 No. of Claims : 90

(12) PATENT APPLICATION PUBLICATION
(19) INDIA
(22) Date of filing of Application :28/12/2020
(21) Application No.202017056710 A
(43) Publication Date : 11/06/2021

(54) Title of the invention : METHOD FOR MANUFACTURING STEAM TURBINE DIAPHRAGM

(51) International classification	:F01D0005220000, F01D0025240000, F01D0011080000, F01D0025260000, H04R0009060000
(31) Priority Document No	:2019-034598
(32) Priority Date	:27/02/2019
(33) Name of priority country	:Japan
(86) International Application No	:PCT/JP2019/047495
Filing Date	:04/12/2019
(87) International Publication No	:WO 2020/174801
(61) Patent of Addition to Application Number	:NA
Filing Date	:NA
(62) Divisional to Application Number	:NA
Filing Date	:NA

(71)**Name of Applicant :**
1)MITSUBISHI POWER, LTD.
Address of Applicant :3-1, Minatomirai 3-chome, Nishi-ku, Yokohama-shi, Kanagawa 2208401 Japan
(72)**Name of Inventor :**
1)KAWANO Takanori
2)KUBO Naoto
3)OGASAWARA Nozomu

(57) Abstract :
This diaphragm for a steam turbine has a diaphragm inner wheel, a diaphragm outer wheel, and a wing section that are integrally formed, wherein: the diaphragm comprises a collector ring that holds a seal fin having a radial spill strip structure, and an adapter ring that is interposed between the diaphragm outer wheel and the collector ring; the collector ring and the adapter ring have an outer diameter that is larger than the diaphragm outer wheel; the diaphragm outer wheel and the adapter ring are interconnected using a plurality of first bolts; the opposing surfaces of the diaphragm outer wheel and the adapter ring are brought into close contact with each other so as to be sealed; and the collector ring and the adapter ring are interconnected using a plurality of second bolts in positions further on the outer circumferential side than the seal fin.

No. of Pages : 27 No. of Claims : 5

(12) PATENT APPLICATION PUBLICATION
(19) INDIA
(22) Date of filing of Application :16/11/2020
(21) Application No.202018049865 A
(43) Publication Date : 11/06/2021

(54) Title of the invention : NEWCASTLE DISEASE VIRUSES AND USES THEREOF

(51) International classification	:A61K0039170000, C12N0007000000, A61K0039395000, A61K0035768000, A61K0039000000
(31) Priority Document No	:61/782,994
(32) Priority Date	:14/03/2013
(33) Name of priority country	:U.S.A.
(86) International Application No	:PCT/US2014/020299
Filing Date	:04/03/2014
(87) International Publication No	: NA
(61) Patent of Addition to Application Number	:NA
Filing Date	:NA
(62) Divisional to Application Number	:8204/DELNP/2015
Filed on	:10/09/2015

(71)**Name of Applicant :**
1)ICAHN SCHOOL OF MEDICINE AT MOUNT SINAI
Address of Applicant :One Gustave L. Levy Place New York, NY 10029 (US) U.S.A.
2)MEMORIAL SLOAN KETTERING CANCER CENTER
(72)**Name of Inventor :**
1)PALESE, Peter
2)GARCIA-SASTRE, Adolfo
3)ZAMARIN, Dmitriy
4)ALLISON, James
5)WOLCHOK, Jedd, D.

(57) Abstract :
Described herein are chimeric Newcastle disease viruses engineered to express an agonist of a co-stimulatory signal of an immune cell and compositions comprising such viruses. Also described herein are chimeric Newcastle disease viruses engineered to express an antagonist of an inhibitory signal of an immune cell and compositions comprising such viruses. The chimeric Newcastle disease viruses and compositions are useful in the treatment of cancer. In addition, described herein are methods for treating cancer comprising administering Newcastle disease viruses in combination with an agonist of a co-stimulatory signal of an immune and/or an antagonist of an inhibitory signal of an immune cell.

No. of Pages : 196 No. of Claims : 14

(12) PATENT APPLICATION PUBLICATION
(21) Application No.202117002161 A
(19) INDIA
(22) Date of filing of Application :18/01/2021
(43) Publication Date : 11/06/2021

(54) Title of the invention : BATTERY CELL CONNECTOR, AND BATTERY CELL STRUCTURE CONNECTED USING SAME

(51) International classification	:H01M0002100000, H01M0002300000, H01M0002200000, H01M0010040000, H01Q0009420000
(31) Priority Document No	:10-2018-0164151
(32) Priority Date	:18/12/2018
(33) Name of priority country	:Republic of Korea
(86) International Application No	:PCT/KR2019/017406
Filing Date	:10/12/2019
(87) International Publication No	:WO 2020/130464
(61) Patent of Addition to Application Number	:NA
Filing Date	:NA
(62) Divisional to Application Number	:NA
Filing Date	:NA

(71)**Name of Applicant :**
1)LG CHEM, LTD.
Address of Applicant :128,Yeoui-daero Yeongdeungpo-Gu Seoul 07336 Republic of Korea
(72)**Name of Inventor :**
1)KIM, Yong Han
2)PARK, Pil Kyu
3)SUNG, Joo Hwan
4)BOK, Cheon Hee

(57) Abstract :
The present invention relates to a battery cell connector having a generally hexahedral shape, comprising: a lower mounting part provided on the upper surface thereof so as to mount the lower portion of a cylindrical-shaped battery cell in the lower mounting part; an upper mounting part provided on the lower surface thereof so as to mount the upper portion of another cylindrical-shaped battery cell in the upper mounting part; and connection parts provided on the front surface, the rear surface, the left surface, and the right surface thereof, which can be electrically and physically connected to other battery cells different from each other, wherein the lower mounting part, the upper mounting part, and the connection parts are electrically connected to each other inside the battery cell connector.

No. of Pages : 20 No. of Claims : 9

(12) PATENT APPLICATION PUBLICATION
(21) Application No.202117004510 A
(19) INDIA
(22) Date of filing of Application :02/02/2021
(43) Publication Date : 11/06/2021

(54) Title of the invention : REFERENCE CORE POSITION CALCULATION DEVICE FOR ELEVATOR AND REFERENCE CORE CALCULATION METHOD

(51) International classification	:B66B0011000000, G01B0011000000, H04W0024100000, B66B0005000000, H04W0072080000
(31) Priority Document No	:2019-031087
(32) Priority Date	:22/02/2019
(33) Name of priority country	:Japan
(86) International Application No	:PCT/JP2019/047659
Filing Date	:05/12/2019
(87) International Publication No	:WO 2020/170551
(61) Patent of Addition to Application Number	:NA
Filing Date	:NA
(62) Divisional to Application Number	:NA
Filing Date	:NA

(71)**Name of Applicant :**
1)HITACHI BUILDING SYSTEMS CO., LTD.
Address of Applicant :2-101, Kandaawaji-cho, Chiyoda-ku, Tokyo 1018941 Japan
(72)**Name of Inventor :**
1)TAGUCHI, Hirofumi
2)NOGUCHI, Naoaki
3)MATSUKA, Daisuke
4)YAGI, Nobuaki
5)ITOU, Masato

(57) Abstract :
This reference core position calculation device 100, which calculates the reference core position of a hoistway in which an elevator is installed, has a measurement unit 101 and a calculation unit 112. The measurement unit 101 measures the dimension of each part of the hoistway. The calculation unit 112 calculates a dimension value of each part of the hoistway on the basis of the reference core position and the dimension of each part measured by the measurement unit 101. When the reference core position is set as a first reference core position, the calculation unit 112 determines, on the basis of a first reference core position, whether or not the dimension value of each part of the hoistway satisfies a predetermined specification.

No. of Pages : 40 No. of Claims : 8

(12) PATENT APPLICATION PUBLICATION
(19) INDIA
(22) Date of filing of Application :06/02/2021
(21) Application No.202117005149 A
(43) Publication Date : 11/06/2021

(54) Title of the invention : BIFUNCTIONAL ANGIOGENESIS INHIBITOR AND USE THEREOF

(51) International classification	:C07K0005103000, A61P0029000000, C07D0213820000, A61K0031443900, C07K0014810000
(31) Priority Document No	:201811491023.1
(32) Priority Date	:07/12/2018
(33) Name of priority country	:China
(86) International Application No	:PCT/CN2019/122854
Filing Date	:04/12/2019
(87) International Publication No	:WO 2020/114411
(61) Patent of Addition to Application Number	:NA
Filing Date	:NA
(62) Divisional to Application Number	:NA
Filing Date	:NA

(71)**Name of Applicant :**
1)REMEGEN CO., LTD.
Address of Applicant :No. 58 Beijing Middle Road, Yantai Development Zone Yantai District, China (Shandong) Pilot Free Trade Zone Shandong 264006 China
(72)**Name of Inventor :**
1)JIANG, Jing
2)FANG, Jianmin
3)LUAN, Xuejing
4)YAO, Xuejing
5)WANG, Ling

(57) Abstract :
The present invention relates to a bifunctional angiogenesis inhibitor having VEGF inhibitory activities and FGF inhibitory activities and capable of inhibiting VEGF and FGF dual factors or high sugar-induced cell proliferation, cell migration and/or lumen formation. The present invention also relates to use of the bifunctional vascular inhibitor for inhibiting retinal angiogenesis, such as diabetic retinopathy, age-related macular degeneration.

No. of Pages : 24 No. of Claims : 20

(12) PATENT APPLICATION PUBLICATION
(21) Application No.202117008739 A
(19) INDIA
(22) Date of filing of Application :02/03/2021
(43) Publication Date : 11/06/2021

(54) Title of the invention : THREE-DIMENSIONAL HEAT-SAVING CONSTRUCTION PANEL, DEVICE AND METHOD FOR PREPARING SAME (VARIATIONS)

(51) International classification	:B29L0031000000, E04B0002700000, C04B0111600000, C04B0111280000, E04B0001140000	(71)**Name of Applicant :** **1)CHOLPONALY, uulu Usenkul** Address of Applicant :per. Samarkandsky - 9, g. Bishkek, Kyrgyz Republic
(31) Priority Document No	:20190007.1	(72)**Name of Inventor :** **1)CHOLPONALY, uulu Usenkul**
(32) Priority Date	:06/02/2019	
(33) Name of priority country	:Kyrgyz Republic	
(86) International Application No	:PCT/KG2019/000001	
Filing Date	:05/12/2019	
(87) International Publication No	:WO 2020/162641	
(61) Patent of Addition to Application Number	:NA	
Filing Date	:NA	
(62) Divisional to Application Number	:NA	
Filing Date	:NA	

(57) Abstract :
The present invention relates to the field of construction, specifically to building structures and methods and devices for the production thereof, and can be used as three-dimensional heat-saving panels for rapidly erecting load-bearing walls in buildings for various purposes and floors therein, as well as external walls, partitions and roofs which satisfy enhanced thermal resistance requirements for building envelopes in the construction industry. The invention addresses the problem of creating a three-dimensional heat-saving wall panel (variations) with enhanced thermal resistance which satisfies the requirements of passive building parameters, developing a method for the manufacture thereof which allows a reduction in material consumption, energy consumption and labor intensity, and developing a block-form structure (variations) for the preparation thereof.

No. of Pages : 14 No. of Claims : 17

(12) PATENT APPLICATION PUBLICATION
(19) INDIA
(22) Date of filing of Application :17/03/2021
(21) Application No.202117011427 A
(43) Publication Date : 11/06/2021

(54) Title of the invention : METHOD OF CONTROLLING CABLE DRIVEN END EFFECTORS

(51) International classification	:A61B0034300000, B25J0009160000, A61B0034000000, A61B0034370000, B60W0010080000
(31) Priority Document No	:62/776285
(32) Priority Date	:06/12/2018
(33) Name of priority country	:U.S.A.
(86) International Application No	:PCT/US2019/064867
Filing Date	:06/12/2019
(87) International Publication No	:WO 2020/118149
(61) Patent of Addition to Application Number	:NA
Filing Date	:NA
(62) Divisional to Application Number	:NA
Filing Date	:NA

(71)**Name of Applicant :**
1)COVIDIEN LP
Address of Applicant :15 Hampshire Street Mansfield, Massachusetts 02048 U.S.A.
(72)**Name of Inventor :**
1)ROCKROHR, Brian
2)CHENG, Jiqi
3)RAHMAN, Farrukh
4)MEGLAN, Dwight
5)WELLS, Brian
6)AGRAWAL, Alok

(57) Abstract :
A method of controlling an end effector of a surgical robot includes receiving a desired pose, generating motor torques, transmitting the motor torques, generating null torques, generating desired torques, and transmitting the desired torques to an IDU such that the IDU moves the end effector to the desired pose. A primary controller receives the desired pose of the end effector in three DOF. The primary controller generates the motor torques in response to receiving the desired pose. The primary controller transmits the motor torques which are received in a secondary controller. The secondary controller generates null torques to maintain tension in cables of a differential drive mechanism of the IDU. The desired torques are generated for each motor of the IDU to include a sum of the motor torques and the null torques.

No. of Pages : 54 No. of Claims : 20

(12) PATENT APPLICATION PUBLICATION
(21) Application No.202117014732 A
(19) INDIA
(22) Date of filing of Application :31/03/2021
(43) Publication Date : 11/06/2021

(54) Title of the invention : METHOD FOR MEASURING GEOMETRIC DISCREPANCIES BETWEEN THE CURVED SURFACES OF A PLURALITY OF MATERIALS THAT ARE TO BE EVALUATED AND A CURVED SURFACE OF A REFERENCE MATERIAL

(51) International classification	:G01B0011240000, F16C0019380000, G06T0007600000, A61B0006000000, G01N0029300000
(31) Priority Document No	:1872770
(32) Priority Date	:12/12/2018
(33) Name of priority country	:France
(86) International Application No	:PCT/EP2019/083920
Filing Date	:06/12/2019
(87) International Publication No	:WO 2020/120294
(61) Patent of Addition to Application Number	:NA
Filing Date	:NA
(62) Divisional to Application Number	:NA
Filing Date	:NA

(71)**Name of Applicant :**
1)SAINT-GOBAIN GLASS FRANCE
Address of Applicant :12 place de l'Iris Tour Saint-Gobain 92400 Courbevoie France
(72)**Name of Inventor :**
1)CARLU, Adrien
2)MARLIER, Alexandre

(57) Abstract :
The present invention relates to the field of the checking of the reliefs of the curved surfaces of materials, particularly curved surfaces of window glazing designed for means of transport, notably in the automotive industry. The subjects of the invention are a method and system for measuring the geometric discrepancies between the curved surfaces of a plurality of materials that are to be evaluated and a curved surface of a reference material.

No. of Pages : 14 No. of Claims : 17

(12) PATENT APPLICATION PUBLICATION
(19) INDIA
(22) Date of filing of Application :19/03/2019

(21) Application No.201921010712 A
(43) Publication Date : 11/06/2021

(54) Title of the invention : A PROCESS FOR SYNTHESIS OF FIPRONIL

(51) International classification	:A01N0047020000, C07D0231440000, G11B0027034000, H04N0009806000, H04N0005907000
(31) Priority Document No	:NA
(32) Priority Date	:NA
(33) Name of priority country	:NA
(86) International Application No	:NA
Filing Date	:NA
(87) International Publication No	: NA
(61) Patent of Addition to Application Number	:NA
Filing Date	:NA
(62) Divisional to Application Number	:NA
Filing Date	:NA

(71)**Name of Applicant :**
1)GHARDA CHEMICALS LIMITED
Address of Applicant :D-1/2, MIDC, Lote Parshuram, Taluka Khed, Ratnagiri-415722, Maharashtra, India Maharashtra India
(72)**Name of Inventor :**
1)GHARDA, Keki Hormusji
2)SHENOY, Diwakar
3)SHET, Laxminarayan
4)SAMANGADKAR, Yatin
5)KAWADE, Abhijeet Suresh

(57) Abstract :
The process of the present disclosure provides fipronil with a yield in the range of 75% to 90% and purity in the range of 95% to 97%. By the process of the present disclosure, the amount of sulfone impurity i.e., 5-amino-1-(2,6-dichloro-4- trifluoromethylphenyl)-3-cyano-4-trifluoro methylsulfonyl pyrazole in fipronil observed is in the range of 0 % to 0.5 %.

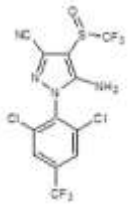

No. of Pages : 25 No. of Claims : 13

(12) PATENT APPLICATION PUBLICATION
(19) INDIA
(22) Date of filing of Application :05/12/2019

(21) Application No.201921022356 A
(43) Publication Date : 11/06/2021

(54) Title of the invention : IMPROVED SELF-ACTUATED PNEUMATIC DRIVE SYSTEM

(51) International classification	:E21B0034100000, E21B0033122000, F01B0003000000, F01B0003040000, A61B0017000000	(71)**Name of Applicant :** **1)PILOT FLUID TECHNOLOGIES LLP** Address of Applicant :A114, H-block, MIDC , Pimpri , PUNE- 411018, Maharashtra State, India Maharashtra India (72)**Name of Inventor :** **1)NARAYAN VILAS DESHPANDE**
(31) Priority Document No	:NA	
(32) Priority Date	:NA	
(33) Name of priority country	:NA	
(86) International Application No	:NA	
Filing Date	:NA	
(87) International Publication No	: NA	
(61) Patent of Addition to Application Number	:NA	
Filing Date	:NA	
(62) Divisional to Application Number	:NA	
Filing Date	:NA	

(57) Abstract :
The present invention provides an improved self-actuated pneumatic drive system that includes an exponential air pilot with differential resultant force exerting area sliding valve mechanism involving a double acting pneumatic cylinder assembly (10) configured with an inner holding tube (20) axially disposed with a floating member (30) therein along with a top valve (40) and a bottom valve (50)respectively having a top sliding member (80) and a bottom sliding member (90) slidably positioned thereon and interconnected by the floating member (30). The system (200) includes a pilot member (120) slidably disposed into the floating member (30) for being pushed or pulled by a connecting rod (130). The system (200) includes a pair of rods (140)which connect to a disc (160) that moves within a cavity of the double acting pneumatic cylinder assembly (10) during actuation thereof.

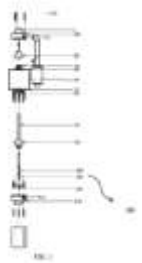

No. of Pages : 14 No. of Claims : 7

(12) PATENT APPLICATION PUBLICATION
(19) INDIA
(22) Date of filing of Application :04/12/2019

(21) Application No.201921040187 A
(43) Publication Date : 11/06/2021

(54) Title of the invention : AN IN-WHEEL ELECTRIC ALL-TERRAIN VEHICLE

(51) International classification	:B60K0007000000, B60K0017040000, B60W0030040000, B62K0005010000, B60L0015200000	(71)**Name of Applicant :** **1)Powerland Agro Tractor Vehicles Private Limited** Address of Applicant :Bungalow No. 3 Costa Row House, Aquem Alto, Margao Goa.403601 Goa India (72)**Name of Inventor :** **1)Tej Narayan Naik** **2)Narayan Pundalik Naik** **3)Amit Sukumar Santra**
(31) Priority Document No	:NA	
(32) Priority Date	:NA	
(33) Name of priority country	:NA	
(86) International Application No	:NA	
Filing Date	:NA	
(87) International Publication No	: NA	
(61) Patent of Addition to Application Number	:NA	
Filing Date	:NA	
(62) Divisional to Application Number	:NA	
Filing Date	:NA	

(57) Abstract :
Disclosed is an in-wheel electric all-terrain vehicle (100). The in-wheel electric all-terrain vehicle (100) includes a powertrain (126) to provide power drive from the engine (102) to at least one of the right front wheel (104), the left front wheel (106), the right rear wheel (108), and the left rear wheel (110), wherein the powertrain (126) includes the engine (102), one or more drive shafts (128), and a final drive (130); an electric in-wheel motor assembly (132) mounted inside each of the four wheels (104, 106, 108, 110), wherein the electric in-wheel motor assembly (132) includes a main shaft (134), one or more stator coils (136), a stator holder (138), a stator coil winding (140), one or more magnets (142), a magnet ring holder (144), one or more bearings (146), a casing (148), one or more internal and external circlips (150). FIG. 1

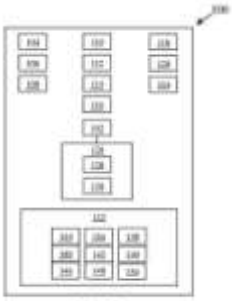

FIG. 1

No. of Pages : 18 No. of Claims : 10

(12) PATENT APPLICATION PUBLICATION
(19) INDIA
(22) Date of filing of Application :04/12/2019

(21) Application No.201921040420 A
(43) Publication Date : 11/06/2021

(54) Title of the invention : WATER PURIFICATION SYSTEM

(51) International classification	:C02F0001440000, B01D0061100000, B01D0061020000, B01D0061080000, C02F0001140000	(71)**Name of Applicant :** **1)SANANDAN SUDHIR** Address of Applicant :C2 801, Waterlily, Adani Shantigram, Ahmedabad, Gujarat, India. Gujarat India (72)**Name of Inventor :** **1)SANANDAN SUDHIR** **2)AKSHAY**
(31) Priority Document No	:NA	
(32) Priority Date	:NA	
(33) Name of priority country	:NA	
(86) International Application No	:NA	
Filing Date	:NA	
(87) International Publication No	: NA	
(61) Patent of Addition to Application Number	:NA	
Filing Date	:NA	
(62) Divisional to Application Number	:NA	
Filing Date	:NA	

(57) Abstract :
A water purification system based on mechanical valves and manual operation without requirement of electric power is disclosed. The system includes a feed water container for storage of feed water, a plurality of reverse osmosis filter cartridges for filtering the feed water, and a manually operated pneumatic pump for pressurizing the feed water container for feed water to flow under pressure to filter cartridges for purification. The mechanical valves ensure that water pressure in the water purification system does not go below an operating pressure due to draining out of the waste water, or due to return of the feed water to the feed water container, and filtration of the feed water takes place only when usable water is being drawn from the system. A mechanism to fill feed water into the pressurized storage container without significant loss of pressure in the feed water storage container is also disclosed.

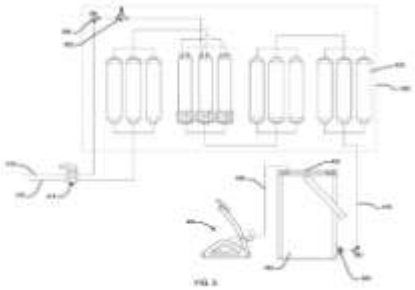

No. of Pages : 43 No. of Claims : 20

(12) PATENT APPLICATION PUBLICATION
(21) Application No.201921045561 A
(19) INDIA
(22) Date of filing of Application :08/12/2019
(43) Publication Date : 11/06/2021

(54) Title of the invention : UNDER-RUN PROTECTION DEVICE

(51) International classification	:B60R0019560000, G11B0020100000, H04J0003060000, H01L0027020000, G11B0007004500	(71)**Name of Applicant :** **1)MR. SANTOSH ARVIND PRADHAN** Address of Applicant :YUGAYA COMPLEX, FLAT NO.A4, 5/5, CTS 7+8/10 ERANDWANE, SHANKARRAO JOSHI MARG, NEAR NAL STOP, BEHIND LAGUBANDHU JEWELLERS, PUNE (M.S) 411004 INDIA Maharashtra India
(31) Priority Document No	:NA	
(32) Priority Date	:NA	(72)**Name of Inventor :**
(33) Name of priority country	:NA	**1)MR. SANTOSH ARVIND PRADHAN**
(86) International Application No	:NA	
Filing Date	:NA	
(87) International Publication No	: NA	
(61) Patent of Addition to Application Number	:NA	
Filing Date	:NA	
(62) Divisional to Application Number	:NA	
Filing Date	:NA	

(57) Abstract :
ABSTRACT UNDER-RUN PROTECTION DEVICE An under-run protection device 100 that is mounted on a chassis 120 of a vehicle 110 is disclosed. The under-run protection device is positioned ahead of front wheels 140 and rear wheels 150 of the vehicle 110. The device includes a first connector assembly 200 that is removably connectable to the chassis the chassis 120. A second protector assembly 205 is rotatably connected to the first connector assembly 200 by a hinge 215. A third spring assembly 210 is securely connected to the second protector assembly 205. The device operates in a first working position and the device has a second folded position. FIG.1 for Publication

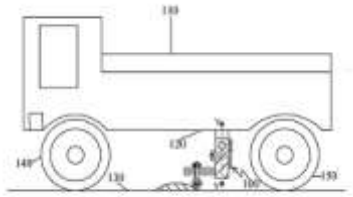

FIG. 1

No. of Pages : 46 No. of Claims : 18

(12) PATENT APPLICATION PUBLICATION
(19) INDIA
(22) Date of filing of Application :04/12/2019

(21) Application No.201921049906 A
(43) Publication Date : 11/06/2021

(54) Title of the invention : METHOD PROVIDING PIPELINING OF CACHE DATA AND A SYSTEM THEREOF

(51) International classification	:G06F0012086200, G06F0013160000, G06F0013364000, G06F0012080200, G06F0012087500	(71)**Name of Applicant :** **1)Indian Institute of Technology Bombay** Address of Applicant :House No. IIT Bombay Street Powai City Mumbai State Maharashtra Country India Pin code 400076 Maharashtra India
(31) Priority Document No	:NA	(72)**Name of Inventor :** **1)Madhav Pandurang Desai**
(32) Priority Date	:NA	
(33) Name of priority country	:NA	
(86) International Application No	:NA	
Filing Date	:NA	
(87) International Publication No	: NA	
(61) Patent of Addition to Application Number	:NA	
Filing Date	:NA	
(62) Divisional to Application Number	:NA	
Filing Date	:NA	

(57) Abstract :
Method providing pipelining of cache data and a system thereof Embodiments provide a method and a system pipelining cache data. The system comprises a processor and a cache memory having a front-end memory for receiving a stream of incoming request from a Central Processing Unit (CPU). The front-end memory processes, each request in the stream of incoming request in a predefined order based on a check of an exception in each request. The front-end memory maintains a pipeline of the stream of incoming requests while processing each of the request allowing an initiation of a new request during processing of one or more ongoing request. The front-end memory checks, for a corresponding response type to be identified for each request and generates a response according to the corresponding response type. FIG. 2

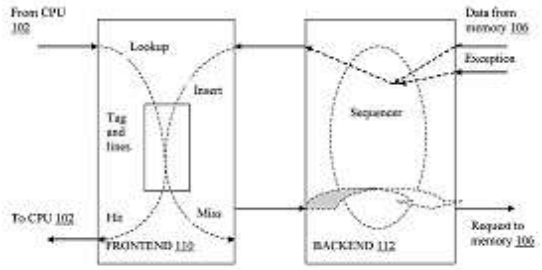

FIG. 2

No. of Pages : 20 No. of Claims : 16

(12) PATENT APPLICATION PUBLICATION
(19) INDIA
(22) Date of filing of Application :04/12/2019

(21) Application No.201921049944 A
(43) Publication Date : 11/06/2021

(54) Title of the invention : 1,2-CHLORINATED POLYVINYLCHLORIDE AND A PROCESS FOR ITS PREPARATION

(51) International classification	:H01M0010440000, G11B0017049000, G03G0015080000, A24D0003060000, B65D0006220000
(31) Priority Document No	:NA
(32) Priority Date	:NA
(33) Name of priority country	:NA
(86) International Application No	:NA
Filing Date	:NA
(87) International Publication No	: NA
(61) Patent of Addition to Application Number	:NA
Filing Date	:NA
(62) Divisional to Application Number	:NA
Filing Date	:NA

(71)**Name of Applicant :**
1)RELIANCE INDUSTRIES LIMITED
Address of Applicant :3RD FLOOR, MAKER CHAMBER-IV, 222, NARIMAN POINT, MUMBAI-400021, MAHARASHTRA, INDIA Maharashtra India
(72)**Name of Inventor :**
1)MUNSHI, Pradip
2)AGRAWAL, Santosh
3)INGLE, Ninad Deepak
4)MAITY, Uttam
5)JASRA, Raksh Vir

(57) Abstract :
ABSTRACT 1,2-CHLORINATED POLYVINYLCHLORIDE AND A PROCESS FOR ITS PREPARATION The present disclosure relates to 1,2-chlorinated polyvinylchloride (1,2-CPVC) and a process for its preparation. The process of the present disclosure is carried out at a chlorine pressure in the range of 2 to 3.5 kg/cm2. 1,2-CPVC obtained by the process of the present disclosure has a chlorine content in the range of 67 to 68%. Further, 1,2-CPVC of the present disclosure is characterized by having no unsaturation in the molecular chain of the CPVC; an inherent viscosity in the range of 0.825 to 0.850; a thermal stability in the range of 800 seconds to 1200 seconds; and a glass transition temperature (Tg) in the range of 150 to 155 °C.

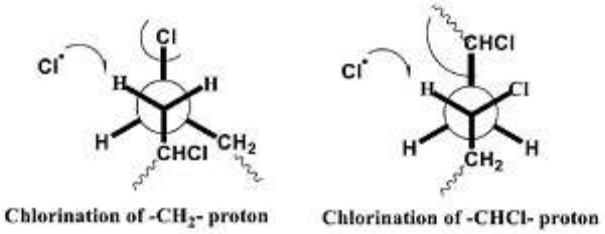

FIGURE 1

No. of Pages : 30 No. of Claims : 10

(12) PATENT APPLICATION PUBLICATION
(19) INDIA
(22) Date of filing of Application :04/12/2019

(21) Application No.201921050010 A
(43) Publication Date : 11/06/2021

(54) Title of the invention : METHOD AND SYSTEM FOR RECOMMENDING TOOL CONFIGURATIONS IN MACHINING

(51) International classification	:H04L0029080000, H04N0021274300, B64G0001360000, H04N0001000000, C07D0263320000	(71)**Name of Applicant :** **1)Tata Consultancy Services Limited** Address of Applicant :Nirmal Building, 9th Floor, Nariman Point Mumbai 400021 Maharashtra India Maharashtra India
(31) Priority Document No	:NA	(72)**Name of Inventor :**
(32) Priority Date	:NA	**1)SHARMA, Sunil**
(33) Name of priority country	:NA	**2)MUHAMMED, Bilal**
(86) International Application No	:NA	**3)PUSULURI, Srimannarayana**
Filing Date	:NA	**4)BASAVARSU, Purushottham Gautham**
(87) International Publication No	: NA	**5)DAS, Prasenjit**
(61) Patent of Addition to Application Number	:NA	
Filing Date	:NA	
(62) Divisional to Application Number	:NA	
Filing Date	:NA	

(57) Abstract :
This disclosure relates generally to recommending tool configurations in machining. The machining tool configuration selection involves the selection of several tool specification parameters concerning the material, geometry and composition of the machining tool. The state-of-the-art methods uses a rule and knowledge-based system to select tool configuration, however these methods do not recommend tool configurations which satisfy customer requirement. Embodiments of the present disclosure uses a hierarchical model which is trained to predict acceptable tool specification parameters for a given requirement by learning the patterns from past tool selection data. Further a probabilistic approach is used to predict the top set of recommendations of tool configurations with a probability score for each prediction. The disclosed method is used for recommending tool configurations in a cylindrical grinding wheel process. [To be published with FIG. 2]

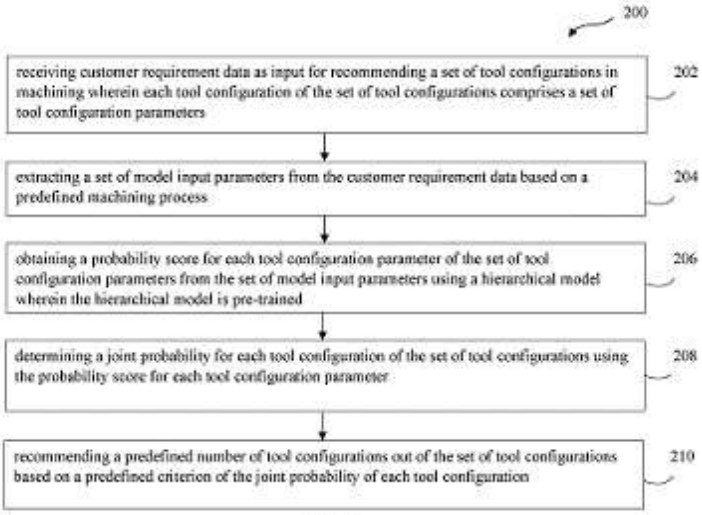

FIG. 2

No. of Pages : 28 No. of Claims : 16

(12) PATENT APPLICATION PUBLICATION
(19) INDIA
(22) Date of filing of Application :04/12/2019

(21) Application No.201921050025 A
(43) Publication Date : 11/06/2021

(54) Title of the invention : POISONOUS GAS DETECTION AND ALARMING DEVICE

(51) International classification	:G01N0033000000, G08B0021140000, G08B0021120000, A62B0018020000, E06B0005140000	(71)**Name of Applicant :** **1)Indian Institute of Technology, Bombay** Address of Applicant :Powai Mumbai 400076 Maharashtra, India Maharashtra India
(31) Priority Document No	:NA	(72)**Name of Inventor :** **1)V. Jothiprakash**
(32) Priority Date	:NA	**2)Tarika Vohra**
(33) Name of priority country	:NA	
(86) International Application No	:NA	
Filing Date	:NA	
(87) International Publication No	: NA	
(61) Patent of Addition to Application Number	:NA	
Filing Date	:NA	
(62) Divisional to Application Number	:NA	
Filing Date	:NA	

(57) Abstract :
The present invention relates to a device for detection of hazardous and poisonous gases. Accordingly, the invention discloses a poisonous gas detection and alarming device which has a plurality of sensors, a plurality of alarming means and a processor. The device, being easy to carry and operate, serves as a life-saving tool which warns users of a hazardous situation, or a toxic gas leak, thereby allowing the users to vacate the affected premises at the earliest. Reference Figure 1

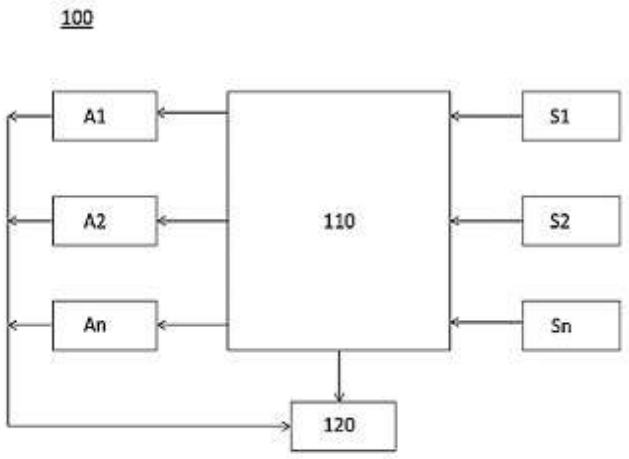

Figure 1

No. of Pages : 15 No. of Claims : 10

(12) PATENT APPLICATION PUBLICATION
(19) INDIA
(22) Date of filing of Application :05/12/2019

(21) Application No.201921050118 A
(43) Publication Date : 11/06/2021

(54) Title of the invention : DIGITAL MEDICINE STORAGE AND REMINDER DEVICE

(51) International classification	:A61J0007040000, G08B0021240000, A61J0001030000, H04H0020300000, H04W0004060000	(71)**Name of Applicant :** **1)PRAJAPATI, Kush Kirtikumar** Address of Applicant :94/1161 Uday Apartments, Near telephone exchange, Shastrinagar, Naranpura, Ahmedabad-380063 Gujarat India
(31) Priority Document No	:NA	**2)MANGUKIYA, Harsh Yogeshbhai**
(32) Priority Date	:NA	**3)PARMAR, Dhaumil Dipakbhai**
(33) Name of priority country	:NA	(72)**Name of Inventor :**
(86) International Application No	:NA	**1)MANGUKIYA, Harsh Yogeshbhai**
Filing Date	:NA	**2)PARMAR, Dhaumil Dipakbhai**
(87) International Publication No	: NA	**3)PRAJAPATI, Kush Kirtikumar**
(61) Patent of Addition to Application Number	:NA	
Filing Date	:NA	
(62) Divisional to Application Number	:NA	
Filing Date	:NA	

(57) Abstract :
ABSTRACT DIGITAL MEDICINE STORAGE AND REMINDER DEVICE The present invention relates to digital medicine storage and reminder device (1) which will store and remind about medicine to the user at specific time. The device comprises storing compartment (100) which comprises a LED (104) with individual light for visual signals to the user that from which compartment (100) medicines is to be taken and audio signal through the buzzer (200) at pre-programmed time. The device is provided with smart display (200) and wireless connection for mobile as well as web interface connection. The compartment (100) is such that avoid the direct contact with the medicine. The device (1) also comprising a SoS button (303) being capable to call to the emergency number stored. Fig.1

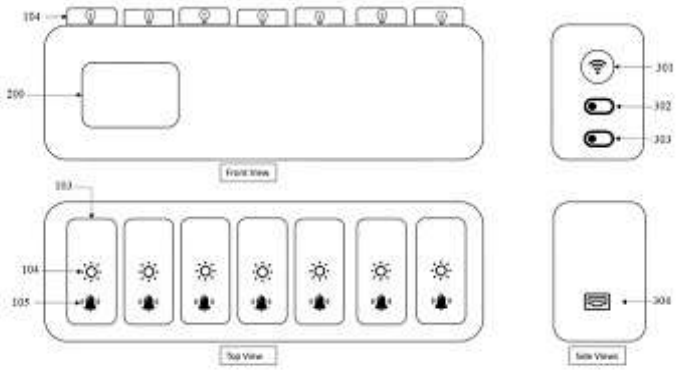

Fig. 1

No. of Pages : 19 No. of Claims : 9

(12) PATENT APPLICATION PUBLICATION
(19) INDIA
(22) Date of filing of Application :05/12/2019

(21) Application No.201921050175 A
(43) Publication Date : 11/06/2021

(54) Title of the invention : A MOBILITY DEVICE

(51) International classification	:A61G0007100000, A61G0005040000, A61G0005140000, A61G0005000000, A61G0005100000	(71)**Name of Applicant :** **1)ALABASTER RESEARCH AND TECHNOLOGIES PRIVATE LIMITED** Address of Applicant :A 603 Himali Tower, NR. Kenyug Appt., NR. Shyamal Cross Road, Satellite, Ahmedabad, Gujarat, India 380015 Gujarat India
(31) Priority Document No	:NA	
(32) Priority Date	:NA	(72)**Name of Inventor :**
(33) Name of priority country	:NA	**1)Chintan Vinod Shinde**
(86) International Application No	:NA	**2)Aeshna Amin**
Filing Date	:NA	**3)Kishan Amin**
(87) International Publication No	: NA	**4)Prem Shah**
(61) Patent of Addition to Application Number	:NA	
Filing Date	:NA	
(62) Divisional to Application Number	:NA	
Filing Date	:NA	

(57) Abstract :
The present disclosure provides a mobility device (100) for moving a person to and from a seated position. The mobility device (100) comprises a seat (2), an adjustable handle (4) and a seat adjusting mechanism (6). The adjustable handle (4) is provided with a first wireless joystick pad (402) for raising, lowering and tilting the seat (2) and for controlling the motion of the device. The seat adjusting mechanism (6) is configured to be attached with said seat (2) and connect with said adjustable handle (4) configured with the first wireless joystick pad (402) to raise, lower and tilt the seat (2). The seat adjusting mechanism (6) comprises a plurality of crossed links (602) pivotally attached with each other, to form the seat adjusting/collapsing mechanism (6) and, an actuating mechanism (604) mounted on a base (8) of the mobility device (100) and linked with the plurality of crossed links (602). [Figure 1]

No. of Pages : 26 No. of Claims : 18

(12) PATENT APPLICATION PUBLICATION
(19) INDIA
(22) Date of filing of Application :05/12/2019

(21) Application No.201921050176 A
(43) Publication Date : 11/06/2021

(54) Title of the invention : EMISSION TREATMENT SYSTEM FOR TREATING AN EXHAUST STREAM FROM AN ENGINE

(51) International classification	:B01D0053940000, B01D0053860000, F01N0003010000, B03C0003680000, F01N0003023000
(31) Priority Document No	:NA
(32) Priority Date	:NA
(33) Name of priority country	:NA
(86) International Application No	:NA
Filing Date	:NA
(87) International Publication No	: NA
(61) Patent of Addition to Application Number	:NA
Filing Date	:NA
(62) Divisional to Application Number	:NA
Filing Date	:NA

(71)**Name of Applicant :**
1)TATA MOTORS LIMITED
Address of Applicant :Bombay House, 24 Homi Mody Street, Hutatma Chowk, Mumbai 400 001, Maharashtra, India. Maharashtra India
2)TATA MOTORS EUROPEAN TECHNICAL CENTRE Plc
(72)**Name of Inventor :**
1)Neil Brison
2)Anthony Ashburner

(57) Abstract :
Embodiments herein provide an emission treatment system (1000) for a vehicle. The emission treatment system (1000) comprises an electrostatic precipitator (100) connected to a titanium oxide catalyst (200). The electrostatic precipitator (100) captures soot particles from an exhaust of the vehicle using a principle of electrostatic precipitation. The titanium oxide catalyst (200) converts nitrogen oxide gas into nitrogen and oxygen. FIG. 2

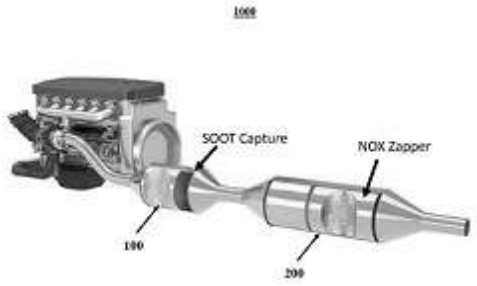

FIG. 2

No. of Pages : 17 No. of Claims : 8

(12) PATENT APPLICATION PUBLICATION
(21) Application No.201921050274 A
(19) INDIA
(22) Date of filing of Application :05/12/2019
(43) Publication Date : 11/06/2021

(54) Title of the invention : A PROCESS FOR PREPARATION OF ROASTED CHICKPEA WITH HERBAL COATING

(51) International classification	:A61K0036185000, A23L0025000000, A61L0033000000, C07K0014415000, A23L0005100000	(71)**Name of Applicant :** **1)Talwar Bela Madan** Address of Applicant :74 - Thankorbhai Tower, Opp. Khadi Sarita, Nr. Law Garden, Ellisbridge, Ahmedabad 380006, Gujarat, India Gujarat India
(31) Priority Document No	:NA	(72)**Name of Inventor :**
(32) Priority Date	:NA	**1)Talwar Bela Madan**
(33) Name of priority country	:NA	
(86) International Application No	:NA	
Filing Date	:NA	
(87) International Publication No	: NA	
(61) Patent of Addition to Application Number	:NA	
Filing Date	:NA	
(62) Divisional to Application Number	:NA	
Filing Date	:NA	

(57) Abstract :
A Process For Preparation Of Roasted Chickpea With Herbal Coating The present invention discloses a process of preparation of roasted chickpea with herbal coating which are prepared by roasting the chickpea with herbs. The roasted chickpea are enrobed with a dry mixture of herbal coating agents.

No. of Pages : 15 No. of Claims : 3

(12) PATENT APPLICATION PUBLICATION
(19) INDIA
(22) Date of filing of Application :06/12/2019

(21) Application No.201921050319 A
(43) Publication Date : 11/06/2021

(54) Title of the invention : A DEVICE FOR CLEANING WATER BODIES

(51) International classification	:C02F0001660000, C02F0007000000, C02F0001760000, E04H0004120000, C02F0001000000	(71)**Name of Applicant :** **1)KADGE JATIN NANDKUMAR** Address of Applicant :ROOM NO. 54, CHAWL NO. 2, OLD B.D.D. CHAWL, S.S. WAUGH ROAD, NAIGAON, DADAR, MUMBAI - 400014, MAHARASHTRA, INDIA. Maharashtra India
(31) Priority Document No	:NA	
(32) Priority Date	:NA	(72)**Name of Inventor :**
(33) Name of priority country	:NA	**1)KADGE JATIN NANDKUMAR**
(86) International Application No	:NA	
Filing Date	:NA	
(87) International Publication No	: NA	
(61) Patent of Addition to Application Number	:NA	
Filing Date	:NA	
(62) Divisional to Application Number	:NA	
Filing Date	:NA	

(57) Abstract :
An eco-friendly and economical remotely operatable device for cleaning garbage including microplastic from water bodies. The device can be remotely operated wirelessly within a range of 20-1000 meters radius and is used for collecting the garbage that floats on the surface water column.

Fig. 1

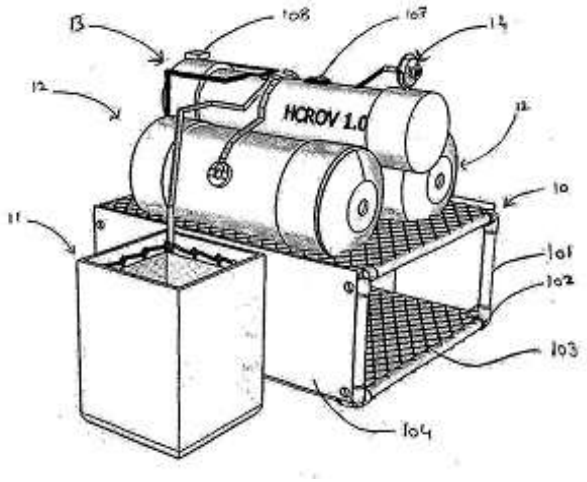

No. of Pages : 19 No. of Claims : 9

(12) PATENT APPLICATION PUBLICATION
(19) INDIA
(22) Date of filing of Application :06/12/2019

(21) Application No.201921050344 A
(43) Publication Date : 11/06/2021

(54) Title of the invention : METHOD AND SYSTEM FOR FACILITATING SCHEDULED TRANSACTIONS

(51) International classification	:G06Q0020400000, G06Q0020320000, G06Q0020100000, G06Q0050220000, H04W0072120000	(71)**Name of Applicant :** **1)MASTERCARD INTERNATIONAL INCORPORATED** Address of Applicant :2000 Purchase Street, Purchase, NY 10577 U.S.A.
(31) Priority Document No	:NA	(72)**Name of Inventor :**
(32) Priority Date	:NA	**1)Ritesh Chaudhari**
(33) Name of priority country	:NA	**2)Chetan Bhalerao**
(86) International Application No	:NA	**3)Arpan Beohar**
Filing Date	:NA	**4)Ashish Dhande**
(87) International Publication No	: NA	
(61) Patent of Addition to Application Number	:NA	
Filing Date	:NA	
(62) Divisional to Application Number	:NA	
Filing Date	:NA	

(57) Abstract :
A method and system for facilitating payment transactions is provided. A server receives a transaction scheduling request from a first user device for scheduling a payment transaction from a first payment account associated with a first user to a second payment account associated with a second user. The payment transaction is scheduled for a first time instance. Upon successful scheduling of the payment transaction, a one-time password for authenticating the scheduled payment transaction is communicated to the first user. The server receives a payment transaction request corresponding to the scheduled payment transaction from a second user device associated with the second user to approve the scheduled payment transaction. The scheduled payment transaction is approved upon successfully receiving the one-time password from the second user device.

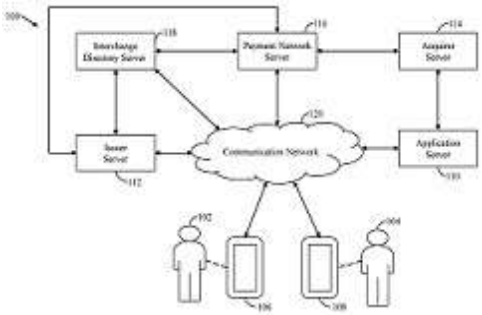

FIG. 1

No. of Pages : 70 No. of Claims : 20

(12) PATENT APPLICATION PUBLICATION
(21) Application No.201921050387 A
(19) INDIA
(22) Date of filing of Application :06/12/2019
(43) Publication Date : 11/06/2021

(54) Title of the invention : DEVELOPMENT OF NOVEL PRESSURISED SOLID-LIQUID EXTRACTOR FOR NATURAL PRODUCTS AND HERBAL DYE'S EXTRACTION.

(51) International classification	:B01D0011020000, B01F0015040000, D06P0001340000, A61K0036185000, C11B0009020000	(71)**Name of Applicant :** **1)Dr.Pravinkumar Patil** Address of Applicant :DOT, Shivaji University, kolhapur Maharashtra India **2)Dr.Akilahemad Wasif** **3)RISHABH HATTIMARE**
(31) Priority Document No	:NA	
(32) Priority Date	:NA	
(33) Name of priority country	:NA	
(86) International Application No	:NA	
Filing Date	:NA	
(87) International Publication No	: NA	
(61) Patent of Addition to Application Number	:NA	
Filing Date	:NA	
(62) Divisional to Application Number	:NA	
Filing Date	:NA	

(72)**Name of Inventor :**
1)Dr.Pravinkumar Patil
2)Dr.Akilahemad Wasif
3)RISHABH HATTIMARE

(57) Abstract :
In the present investigation, the extraction of natural dyes is done by heating its raw material with an appropriate solvent and it leads to the separation of pivotal color pigments from its raw matter. This novel invention describes the technique for efficient extraction of the active constituents from vegetable based fine solid powdered raw material using liquid solvent and pneumatic technique. The extractor mainly works on the principle of changing pressure gradients i.e. positive and negative pressure gradients, through the bed of solid material housed in the cartridges. Further, due to repetition of the cycles of negative and positive pressures applied pneumatically with a cylinder piston air compressor setup, the entire extraction of the target component from solid raw material is done in lesser time than other methods used for extraction even at the room temperature.

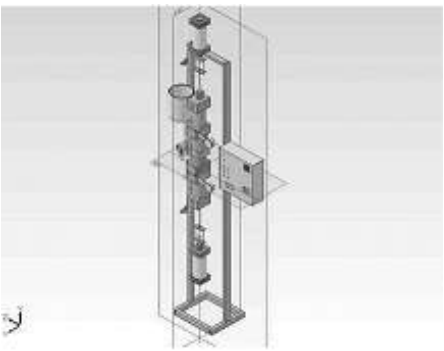

No. of Pages : 27 No. of Claims : 1

(12) PATENT APPLICATION PUBLICATION
(21) Application No.201921050399 A
(19) INDIA
(22) Date of filing of Application :06/12/2019
(43) Publication Date : 11/06/2021

(54) Title of the invention : SELF VENTILATING SUSTAINABLE BUILDING

(51) International classification	:G03G0009087000, C08G0018750000, C11D0001290000, F03D0009340000, D21H0017670000	(71)**Name of Applicant :** **1)Tanishka Abhijit Shah** Address of Applicant :1008, Tower 2, Gera Trinity Towers, Gera™s Greensville, Kharadi, Pune - 411014, Maharashtra, India Maharashtra India
(31) Priority Document No	:NA	(72)**Name of Inventor :**
(32) Priority Date	:NA	**1)Tanishka Abhijit Shah**
(33) Name of priority country	:NA	
(86) International Application No	:NA	
Filing Date	:NA	
(87) International Publication No	: NA	
(61) Patent of Addition to Application Number	:NA	
Filing Date	:NA	
(62) Divisional to Application Number	:NA	
Filing Date	:NA	

(57) Abstract :
SELF VENTILATING SUSTAINABLE BUILDING Abstract Disclosed is a self ventilating sustainable building (100) that comprises a day-lighting arrangement, a water distribution system and a ventilation system. The material used for the construction of the self ventilating sustainable building (100) is a self-cement that reduces the carbon emission by fixation of CO2 during the processing and creation of the material. The self ventilating sustainable building (100) is designed in such a way that the requirement of air conditioners and fans is completely eliminated and the overall energy consumption of the self ventilating sustainable building (100) is far less than a normal building. Figure 6

No. of Pages : 19 No. of Claims : 7

(12) PATENT APPLICATION PUBLICATION
(19) INDIA
(22) Date of filing of Application :06/12/2019

(21) Application No.201921050410 A
(43) Publication Date : 11/06/2021

(54) Title of the invention : AN EXHAUST SYSTEM FOR AN INTERNAL COMBUSTION ENGINE

(51) International classification	:F01N0003280000, B01F0003040000, F01N0013000000, F01N0013180000, B01F0005000000	(71)**Name of Applicant :** **1)FAURECIA INDIA PRIVATE LIMITED** Address of Applicant :Plot No.T-187, Pimpri Industrial Area (B.G. Block), Behind Bhosari Police Station, Bhosari, Pune, 411026 MH. India Maharashtra India
(31) Priority Document No	:NA	(72)**Name of Inventor :** **1)AHMED, Aejaz**
(32) Priority Date	:NA	
(33) Name of priority country	:NA	
(86) International Application No	:NA	
Filing Date	:NA	
(87) International Publication No	: NA	
(61) Patent of Addition to Application Number	:NA	
Filing Date	:NA	
(62) Divisional to Application Number	:NA	
Filing Date	:NA	

(57) Abstract :
The present invention is to provide an exhaust system 500 for an internal combustion engine. The exhaust system 500 includes an inlet pipe 100, an after treatment unit 200, and an outlet pipe 300. The inlet pipe 100 includes an upper portion 110, a middle portion 120 and a lower portion 130. The upper portion 110 and the lower portion 130 has perforations for directing and guiding the exhaust gas flow towards an after-treatment unit 200. Further, the middle portion 120 of the inlet pipe 100 has a reduced cross sectional area than the upper portion 110 and the lower portion 130 which facilitates a uniform flow distribution of exhaust gas towards the after treatment unit 200. The present invention enhances enough swirl/turbulence for the exhaust flow entering the exhaust system 500 such that flow distribution over a substrate 210 face is uniform, especially for radial inlet systems. Figure 1

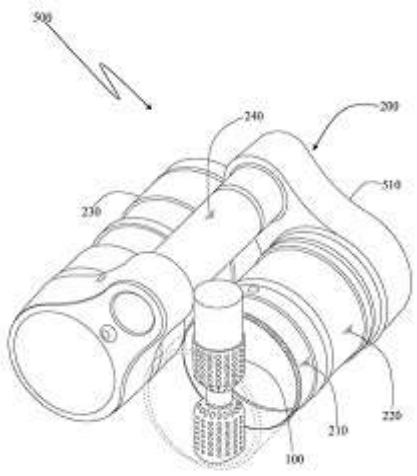

Figure 1

No. of Pages : 18 No. of Claims : 6

(12) PATENT APPLICATION PUBLICATION
(19) INDIA
(22) Date of filing of Application :06/12/2019

(21) Application No.201921050414 A
(43) Publication Date : 11/06/2021

(54) Title of the invention : VANE TYPE SEPARATOR WITH ENHANCED PERFORMANCE

(51) International classification	:B01D0045080000, B01D0050000000, F01D0005180000, F02C0003040000, F01M0013040000	(71)**Name of Applicant :** **1)LARSEN & TOUBRO LIMITED** Address of Applicant :L&T House, Ballard Estate, Mumbai - 400 001, Maharashtra State, India Maharashtra India (72)**Name of Inventor :** **1)Murur Venkatesh** **2)Suyog Shinde**
(31) Priority Document No	:NA	
(32) Priority Date	:NA	
(33) Name of priority country	:NA	
(86) International Application No	:NA	
Filing Date	:NA	
(87) International Publication No	: NA	
(61) Patent of Addition to Application Number	:NA	
Filing Date	:NA	
(62) Divisional to Application Number	:NA	
Filing Date	:NA	

(57) Abstract :
Disclosed is a vane type separator for separating liquid droplets from steam-liquid or gas-liquid mixture. The vane type separator comprising a stack of plurality of vanes closely arranged together to form a plurality of flow path for stream of steam/gas-mist mixture. Specifically each vane of the plurality vanes includes multiple bends to form any one of wave and saw tooth shaped flow paths. The vane type separator is characterized by that the flow path is divided into two equal channels by using a partition plate. The vane type liquid separator works with a principle of inertial impaction for the mist elimination by employing closely arranged separation surfaces forming a wave or saw tooth shaped flow paths and variable gaps between two surfaces along the flow path to achieve more efficiency with the progression of the flow passage.

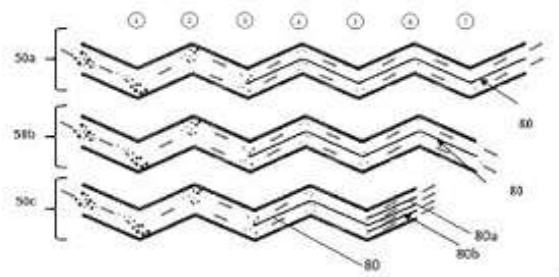

Figure 4

No. of Pages : 13 No. of Claims : 5

(12) PATENT APPLICATION PUBLICATION
(21) Application No.201921050415 A
(19) INDIA
(22) Date of filing of Application :06/12/2019
(43) Publication Date : 11/06/2021

(54) Title of the invention : SCRAPER GATE MECHANISM

(51) International classification	:E01C0023088000, E02F0003650000, E02F0003640000, A01K0001020000, E05F0015530000	(71)**Name of Applicant :** **1)LARSEN & TOUBRO LIMITED** Address of Applicant :L&T House, Ballard Estate, Mumbai - 400 001, Maharashtra State, India Maharashtra India
(31) Priority Document No	:NA	(72)**Name of Inventor :**
(32) Priority Date	:NA	**1)Talaviya Manish Mansukhbhai**
(33) Name of priority country	:NA	**2)Logesh Ranganathan**
(86) International Application No	:NA	**3)Arumugam Gomathinayagam**
Filing Date	:NA	
(87) International Publication No	: NA	
(61) Patent of Addition to Application Number	:NA	
Filing Date	:NA	
(62) Divisional to Application Number	:NA	
Filing Date	:NA	

(57) Abstract :
Disclosed is a scraper gate mechanism (50) for a scraper gate (60) of a milling unit (100) of a milling machine. The scraper gate mechanism (50) comprises a hinged plate (10), an actuator (20), a sliding plate (30) and a pair of guide rods (40). The scraper gate (60) is fully opened by removing a locking pin from one of the hinge (6) and partially opened by adjusting the height of the sliding plate (30) that is controlled and guided by the actuator (20) and the pair of guide rods (40). The scraper gate mechanism (50) allows access to a plurality of cutter picks (75) when an engine is switched off without a hydraulic power. The scraper gate mechanism (50) allows partial opening of the scraper gate (60) that result in a lesser stroke length of the actuator (20) and hence better space utilization and lesser costs

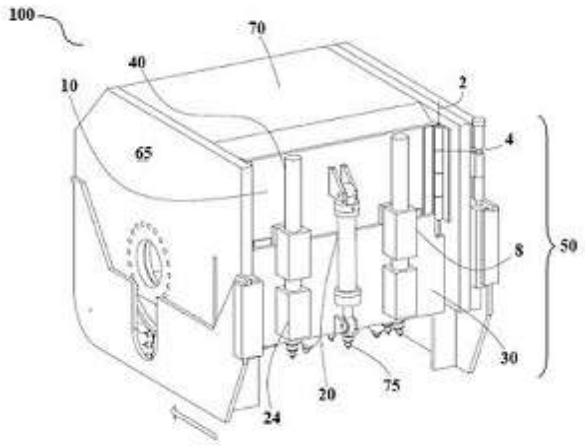

Figure 3

No. of Pages : 16 No. of Claims : 4

(12) PATENT APPLICATION PUBLICATION
(19) INDIA
(22) Date of filing of Application :06/12/2019

(21) Application No.201921050464 A
(43) Publication Date : 11/06/2021

(54) Title of the invention : WIRELESS COMMAND OPERATED DETONATOR FOR LANDMINE DEMOLITION

(51) International classification	:E04G0023080000, F42B0003113000, E02F0003960000, F42D0001055000, A61B0017000000	(71)**Name of Applicant :** **1)Aerobotics7 Inventions Private Limited** Address of Applicant :A/131/FF-Indraprakash C.H.S.L., Opp. Indrajit Society, Nr. Diamond Mill, Nicol Road, Ahmedabad Gujarat India
(31) Priority Document No	:NA	(72)**Name of Inventor :**
(32) Priority Date	:NA	**1)Harshwardhansinh Zala**
(33) Name of priority country	:NA	
(86) International Application No	:NA	
Filing Date	:NA	
(87) International Publication No	: NA	
(61) Patent of Addition to Application Number	:NA	
Filing Date	:NA	
(62) Divisional to Application Number	:NA	
Filing Date	:NA	

(57) Abstract :
The present invention is a truly wireless method of sending the secure signals from the base to the wireless detonator for the explosion. The Detonator is having many functionalities including wireless command based controlling function, easy platform adaption as per the needs and the capability of using multiple explosives. The Main Purpose of this system is for Landmines Demolition, utilized with a drone/UAV or any other Mechanical devices. It is very lightweight and can be used for controlling multiple systems at once.

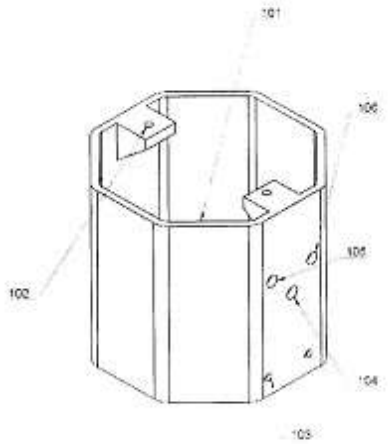

Fig 1

No. of Pages : 17 No. of Claims : 12

(12) PATENT APPLICATION PUBLICATION
(19) INDIA
(22) Date of filing of Application :06/12/2019

(21) Application No.201921050465 A
(43) Publication Date : 11/06/2021

(54) Title of the invention : MULTISPECTRUM BASED LANDMINES DISCOVERY & ACCURATE IDENTIFICATION

(51) International classification	:G11B0007095000, G01N0033680000, H04W0048160000, G06F0003034600, G06F0003048100	(71)**Name of Applicant :** **1)Aerobotics7Inventions Private Limited** Address of Applicant :A/131/FF-Indraprakash C.H.S.L., Opp. Indrajit Society, Nr. Diamond Mill, Nicol Road, Ahmedabad Gujarat India
(31) Priority Document No	:NA	(72)**Name of Inventor :**
(32) Priority Date	:NA	**1)Harshwardhansinh Zala**
(33) Name of priority country	:NA	
(86) International Application No	:NA	
Filing Date	:NA	
(87) International Publication No	: NA	
(61) Patent of Addition to Application Number	:NA	
Filing Date	:NA	
(62) Divisional to Application Number	:NA	
Filing Date	:NA	

(57) Abstract :
Landmine Explosives are one of the major issues and deadliest of all times across the globe. It has been considered as a highly non-detectable object and having the highest risk of human lives. It is very complex and time-consuming technique as well. Multiple-Spectrum based Landmines Discovery & Accurate Identification is a method and technique of the highly accurate and capable of detecting & identifying the less-detectable Landmines buried on Earth. This method utilizes the Multiple-Spectrum based Signal Generating and Transmitting the Algorithm driven waves. Then it uses the different designs of the signal amplifying, filtering, pre-processing, post-processing, mixing, analyzing and outputting on different human recognizable outputs.

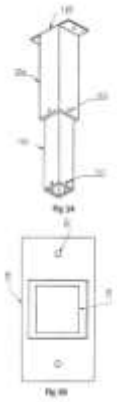

No. of Pages : 27 No. of Claims : 18

(12) PATENT APPLICATION PUBLICATION
(21) Application No.201921050486 A
(19) INDIA
(22) Date of filing of Application :06/12/2019
(43) Publication Date : 11/06/2021

(54) Title of the invention : STRETCHABLE BEDDING COMPONENTS

(51) International classification	:A47G0009020000, B32B0007120000, A47C0031100000, A41D0007000000, G06F0015780000	(71)**Name of Applicant :** **1)INDO COUNT INDUSTRIES LTD.** Address of Applicant :301, 3RD FLOOR, ARCADIA BUILDING, NARIMAN POINT, MUMBAI-400021, INDIA. Maharashtra India
(31) Priority Document No	:NA	(72)**Name of Inventor :** **1)JAIN, Mohit Kumar**
(32) Priority Date	:NA	
(33) Name of priority country	:NA	
(86) International Application No	:NA	
Filing Date	:NA	
(87) International Publication No	: NA	
(61) Patent of Addition to Application Number	:NA	
Filing Date	:NA	
(62) Divisional to Application Number	:NA	
Filing Date	:NA	

(57) Abstract :
Stretchable bedding components reconfigurable between a neutral or retracted configuration and an expanded configuration. In example embodiments, fabric is cut and sewn to form one or more bedding components with at least some dimensions being about 5% 30% less than those of conventional or traditional bedding components. In example embodiments, the length and/or width of the bedding component is expandable between about 5% - 30%. In example embodiments, the stretchable bedding components include a biocomponent yarn having a helical structure that imparts elasticity therein so as to permit stretching of the one or more bedding components.

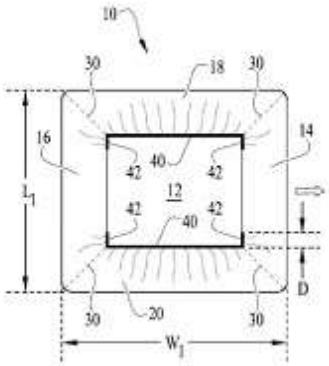

FIG. 1

No. of Pages : 35 No. of Claims : 26

(12) PATENT APPLICATION PUBLICATION
(19) INDIA
(22) Date of filing of Application :06/12/2019

(21) Application No.201921050527 A
(43) Publication Date : 11/06/2021

(54) Title of the invention : BETA ROBOT.

(51) International classification	:B25J0009160000, B25J0009040000, B25J0009000000, B25J0009100000, B25J0017020000	(71)**Name of Applicant :** **1)Shubham Sachin Sonigra** Address of Applicant :Shubham Sachin Sonigra, residing at E-202, Park Royale, Rahatani, Pune 411017, Maharashtra, India, An Indian National. Maharashtra India
(31) Priority Document No	:NA	**2)Ganesh Dnyandeo Dudhe**
(32) Priority Date	:NA	(72)**Name of Inventor :**
(33) Name of priority country	:NA	**1)Shubham Sachin Sonigra**
(86) International Application No	:NA	
Filing Date	:NA	
(87) International Publication No	: NA	
(61) Patent of Addition to Application Number	:NA	
Filing Date	:NA	
(62) Divisional to Application Number	:NA	
Filing Date	:NA	

(57) Abstract :
In this invention, I have developed a new type to robot called as Beta Robot which can used for industrial automation needs like high speed pick and place and where size of the robot and cost of the robot play an important role. This robot is a 3-Degree of Freedom system. The Beta Robot is mounted vertically on the ceiling in such a way that the body of the robot comes directly above the working area. This robot has three servo motors with gearboxes for the three axes. The first axis is a serial axis and the next two axes are parallel axes. These servo motors are standard industrial servo motors attached to high precision gearboxes. The servo motors are controlled by PLC in which the forward kinematics and inverse kinematics are programmed. The synchronized motion of two parallel axes and one serial axis leads to a proper positioning of the end effector. The invention also specifies the placement of the axes for the optimum functioning of the Beta Robot. The design of motor mounting specified by this invention is crucial for the proper functioning of the robot.

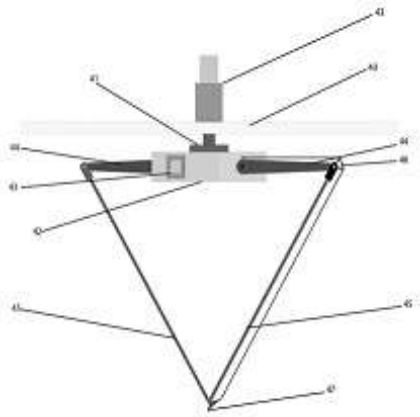

No. of Pages : 18 No. of Claims : 6

(12) PATENT APPLICATION PUBLICATION
(19) INDIA
(22) Date of filing of Application :07/12/2019

(21) Application No.201921050579 A
(43) Publication Date : 11/06/2021

(54) Title of the invention : A METHOD OF PULSED POWER TRANSMISSION AND SYSTEM THEREOF

(51) International classification	:F16H0055360000, F03G0007100000, H02K0016000000, B60K0006547000, F16H0003000000	(71)**Name of Applicant :** **1)SAURABH VIKAS CHAUDHARI** Address of Applicant :SAURABH VIKAS CHAUDHARI. Indian S/O Vikas Kisan Chaudhari. H/N. 1341, Near Swaminarayan Temple, Savda. Taluka: Raver, Distt.: Jalgaon. Maharashtra 425 502 Maharashtra India
(31) Priority Document No	:NA	
(32) Priority Date	:NA	(72)**Name of Inventor :**
(33) Name of priority country	:NA	**1)SAURABH VIKAS CHAUDHARI**
(86) International Application No	:NA	
Filing Date	:NA	
(87) International Publication No	: NA	
(61) Patent of Addition to Application Number	:NA	
Filing Date	:NA	
(62) Divisional to Application Number	:NA	
Filing Date	:NA	

(57) Abstract :
A pulsed power transmission system and method are completely different from the conventional continuous power transmission we are using today. A pulsed power transmission system comprises a said prime mover 101 connected to an input shaft 102 connected to at most two output shafts 110 through said intermittent power transmitting mechanism, wherein each of the output shaft 110 is connected to a said power receiving object 108, an arrangement is made such that at least one rotational energy-storing mechanical component is mounted on or connected to each output shaft 110 and input shaft 102.

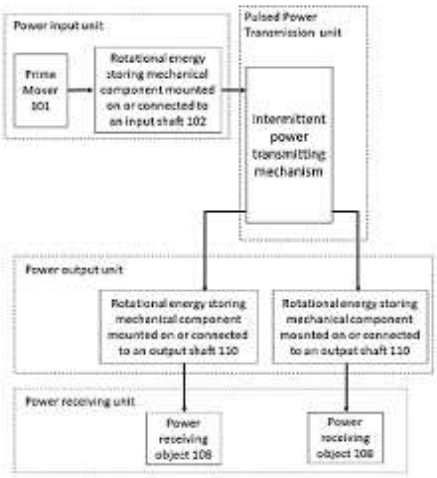

FIG. 4

No. of Pages : 33 No. of Claims : 18

(12) PATENT APPLICATION PUBLICATION
(19) INDIA
(22) Date of filing of Application :07/12/2019

(21) Application No.201921050583 A
(43) Publication Date : 11/06/2021

(54) Title of the invention : ALGORITHM AND COMPUTER PROGRAM TO PREDICATE THE PRICE OF NATURAL GAS USING CORRELATION COEFFICIENT OF PRICE OF NATURAL GAS AND TEMPERATURE.

(51) International classification	:G01K0007420000, F01N0011000000, C10L0003100000, G06F0012086200, G06Q0010040000	(71)**Name of Applicant :** **1)MESBRO TECHNOLOGIES PRIVATE LIMITED** Address of Applicant :Flat no C/904, Geomatrix Dev, Plot no 29, Sector 25, Kamothe, Raigarh-410209, Maharashtra, India Maharashtra India
(31) Priority Document No	:NA	(72)**Name of Inventor :**
(32) Priority Date	:NA	**1)Mr. Bhaskar Vijay Ajgaonkar**
(33) Name of priority country	:NA	
(86) International Application No	:NA	
Filing Date	:NA	
(87) International Publication No	: NA	
(61) Patent of Addition to Application Number	:NA	
Filing Date	:NA	
(62) Divisional to Application Number	:NA	
Filing Date	:NA	

(57) Abstract :
The algorithm is used to predict the price of natural gas in near future. For this prediction it uses data of temperature and price of natural gas for that particular temperature for particular cities with reference to correlation coefficient of natural gas price. For efficient prediction it will use data of temperature prediction from multiple agencies. And then it will take mean of temperature for particular city. By comparing price of natural gas in near future to current price of natural gas it will advise for import or export of natural gas.

FIG 1

No. of Pages : 11 No. of Claims : 5

(12) PATENT APPLICATION PUBLICATION
(19) INDIA
(22) Date of filing of Application :07/12/2019

(21) Application No.201921050584 A
(43) Publication Date : 11/06/2021

(54) Title of the invention : A SYSTEM FOR PLATFORM GAMES USING ARTIFICIAL INTELLIGENCE •

(51) International classification	:G06Q0010060000, A63F0013400000, G07C0005000000, A63F0013800000, G06Q0010000000	(71)**Name of Applicant :** **1)MESBRO TECHNOLOGIES PRIVATE LIMITED** Address of Applicant :Flat no C/904, Geomatrix Dev, Plot no 29, Sector 25, Kamothe, Raigarh-410209, Maharashtra, India Maharashtra India
(31) Priority Document No	:NA	(72)**Name of Inventor :**
(32) Priority Date	:NA	**1)Mr. Bhaskar Vijay Ajgaonkar**
(33) Name of priority country	:NA	
(86) International Application No	:NA	
Filing Date	:NA	
(87) International Publication No	: NA	
(61) Patent of Addition to Application Number	:NA	
Filing Date	:NA	
(62) Divisional to Application Number	:NA	
Filing Date	:NA	

(57) Abstract :
Accordingly, a system for platform games using artificial intelligence is disclosed. A system for platform games using artificial intelligence comprising of; Finding out a solution for platform games using player experienced modelling; Evaluating quality of each solution and comparing the solutions; Omitting the worst quality solutions; Operating the solutions through various commands like move right, move left, move up, move down, jump etc and Allowing the website of the database to assess any textual messages or documents sent by the player automatically in a meaningful way

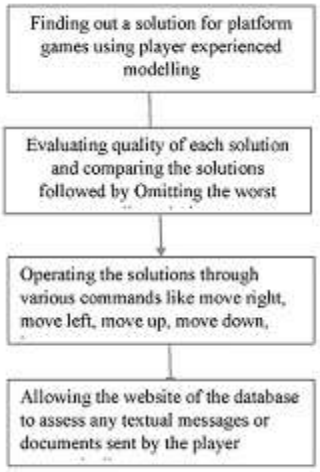

FIG 1

No. of Pages : 8 No. of Claims : 3

(12) PATENT APPLICATION PUBLICATION
(21) Application No.201921050585 A
(19) INDIA
(22) Date of filing of Application :07/12/2019
(43) Publication Date : 11/06/2021

(54) Title of the invention : SYSTEM FOR EFFECTIVE CONTROLLING OF TRAFFIC MANAGEMENT •

(51) International classification	:G08G0001070000, G08G0001080000, G08G0001010000, G08G0001015000, G01N0021956000	(71)**Name of Applicant :** **1)MESBRO TECHNOLOGIES PRIVATE LIMITED** Address of Applicant :Flat no C/904, Geomatrix Dev, Plot no 29, Sector 25, Kamothe, Raigarh-410209, Maharashtra, India Maharashtra India
(31) Priority Document No	:NA	(72)**Name of Inventor :**
(32) Priority Date	:NA	**1)Mr. Bhaskar Vijay Ajgaonkar**
(33) Name of priority country	:NA	
(86) International Application No	:NA	
Filing Date	:NA	
(87) International Publication No	: NA	
(61) Patent of Addition to Application Number	:NA	
Filing Date	:NA	
(62) Divisional to Application Number	:NA	
Filing Date	:NA	

(57) Abstract :
Accordingly, a system for effective controlling of traffic management is disclosed. A system for effective controlling of traffic management comprising of; Detecting the traffic through traffic cameras; Automatically detecting the number of road users, including pedestrians, and types of vehicles that are at an intersection through video feeds; Detecting ways to move traffic through the intersection, changing traffic lights depending on the most optimal way of keeping traffic moving; Gathering all the information in the database of the website; Analyzing data and Enabling computers to identify, process and interpret visual data; and Notifying the user about the status of the traffic and visualize the traffic diversions needed.

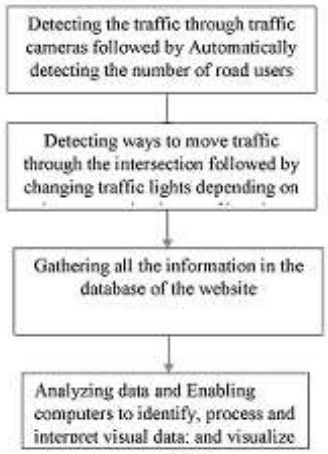

FIG 1

No. of Pages : 10 No. of Claims : 6

(12) PATENT APPLICATION PUBLICATION
(19) INDIA
(22) Date of filing of Application :07/12/2019

(21) Application No.201921050586 A
(43) Publication Date : 11/06/2021

(54) Title of the invention : SYSTEMS AND METHODS FOR BLOCKCHAIN-BASED RESTORATIVE INFORMATION TRANSMISSION

(51) International classification	:H04L0009320000, G06Q0020380000, G06Q0020060000, A63B0069360000, H04L0005000000	(71)**Name of Applicant :** **1)MESBRO TECHNOLOGIES PRIVATE LIMITED** Address of Applicant :Flat no C/904, Geomatrix Dev, Plot no 29, Sector 25, Kamothe, Raigarh-410209, Maharashtra, India Maharashtra India
(31) Priority Document No	:NA	(72)**Name of Inventor :**
(32) Priority Date	:NA	**1)Mr. Bhaskar Vijay Ajgaonkar**
(33) Name of priority country	:NA	
(86) International Application No	:NA	
Filing Date	:NA	
(87) International Publication No	: NA	
(61) Patent of Addition to Application Number	:NA	
Filing Date	:NA	
(62) Divisional to Application Number	:NA	
Filing Date	:NA	

(57) Abstract :
The system and method identifies with a program for blockchain-based therapeutic information transmission with improved security. The method for blockchain-based medicinal information transmission includes the means of: accepting, by a hand-off server, at least one bits of square information from a first hub server; consolidating, by the hand-off server, the at least one bits of square information with a blockchain and putting away the equivalent; and transmitting the at least one bits of square information to a second hub server. As indicated by the present invention, it is conceivable to check whether therapeutic information, for which a transmission demand has been made by a client, is fashioned or adulterated, by looking at square information put away in a majority of hub servers, and in this way it is conceivable to transmit, to an ideal hub server, the first information that isn't produced or misrepresented.

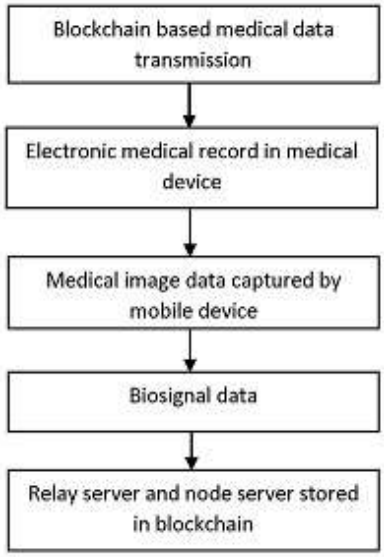

Fig: 1

No. of Pages : 10 No. of Claims : 3

(12) PATENT APPLICATION PUBLICATION
(19) INDIA
(22) Date of filing of Application :07/12/2019

(21) Application No.201921050587 A
(43) Publication Date : 11/06/2021

(54) Title of the invention : SYSTEMS AND METHODS FOR BLOCKCHAIN-BASED INFORMATION MANAGEMENT •

(51) International classification	:H04L0029060000, H04L0009320000, G06F0021310000, G06Q0020380000, G06F0021640000	(71)**Name of Applicant :** **1)MESBRO TECHNOLOGIES PRIVATE LIMITED** Address of Applicant :Flat no C/904, Geomatrix Dev, Plot no 29, Sector 25, Kamothe, Raigarh-410209, Maharashtra, India Maharashtra India
(31) Priority Document No	:NA	(72)**Name of Inventor :**
(32) Priority Date	:NA	**1)Mr. Bhaskar Vijay Ajgaonkar**
(33) Name of priority country	:NA	
(86) International Application No	:NA	
Filing Date	:NA	
(87) International Publication No	: NA	
(61) Patent of Addition to Application Number	:NA	
Filing Date	:NA	
(62) Divisional to Application Number	:NA	
Filing Date	:NA	

(57) Abstract :
Methods Systems, and equipment, as well as laptop programs encoded on computer memory media, for playacting knowledge management. one among the strategies includes: getting authentication data of a login user; generating a digital abstract of the authentication information of the login user; and authenticating the login user supported a comparison between the digital abstract of the authentication information of the login user and one or additional digital abstracts keep on a blockchain.

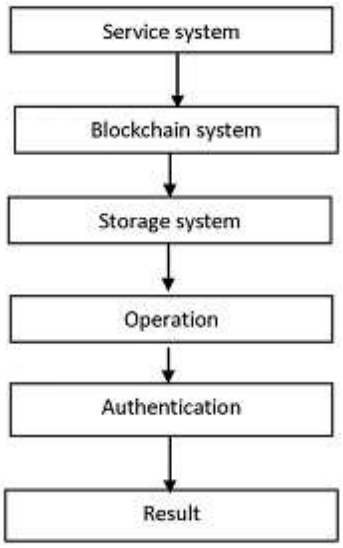

Fig: 1

No. of Pages : 11 No. of Claims : 4

(12) PATENT APPLICATION PUBLICATION
(19) INDIA
(22) Date of filing of Application :07/12/2019

(21) Application No.201921050588 A
(43) Publication Date : 11/06/2021

(54) Title of the invention : A SYSTEM FOR EVALUATING PATENT USING ARTIFICIAL INTELLIGENCE •

(51) International classification	:G06Q0050180000, G06Q0050160000, G06Q0010100000, G06F0016330000, E21B0047000000	(71)**Name of Applicant :** **1)MESBRO TECHNOLOGIES PRIVATE LIMITED** Address of Applicant :Flat no C/904, Geomatrix Dev, Plot no 29, Sector 25, Kamothe, Raigarh-410209, Maharashtra, India Maharashtra India
(31) Priority Document No	:NA	(72)**Name of Inventor :**
(32) Priority Date	:NA	**1)Mr. Bhaskar Vijay Ajgaonkar**
(33) Name of priority country	:NA	
(86) International Application No	:NA	
Filing Date	:NA	
(87) International Publication No	: NA	
(61) Patent of Addition to Application Number	:NA	
Filing Date	:NA	
(62) Divisional to Application Number	:NA	
Filing Date	:NA	

(57) Abstract :
Accordingly, a system for patent evaluation which will choose correct parameters for evaluation of patent is disclosed. A system for patent evaluation using artificial intelligence comprising of; A computer/desktop/laptop for evaluating a patent document; A data input means for receiving data with respect to patents , showing quality of the patent and monetary value of patent; A computer processor for analyzing the patent data ; and A quality checking unit for determining quality of the patent document for generating a conclusion regarding the quality of the patent document ; Wherein the data input means or data storage means such as internal database of the website for receiving data with respect to patents.

FIG 1

No. of Pages : 9 No. of Claims : 6

(12) PATENT APPLICATION PUBLICATION
(19) INDIA
(22) Date of filing of Application :07/12/2019

(21) Application No.201921050590 A
(43) Publication Date : 11/06/2021

(54) Title of the invention : A SYSTEM FOR IMPROVING CROP PRODUCTIVITY •

(51) International classification	:G06Q0010060000, A01B0079000000, G06Q0050020000, A01G0007000000, B64C0039020000	(71)**Name of Applicant :** **1)MESBRO TECHNOLOGIES PRIVATE LIMITED** Address of Applicant :Flat no C/904, Geomatrix Dev, Plot no 29, Sector 25, Kamothe, Raigarh-410209, Maharashtra, India Maharashtra India
(31) Priority Document No	:NA	(72)**Name of Inventor :**
(32) Priority Date	:NA	**1)Mr. Bhaskar Vijay Ajgaonkar**
(33) Name of priority country	:NA	
(86) International Application No	:NA	
Filing Date	:NA	
(87) International Publication No	: NA	
(61) Patent of Addition to Application Number	:NA	
Filing Date	:NA	
(62) Divisional to Application Number	:NA	
Filing Date	:NA	

(57) Abstract :
Accordingly, a system for improving crop management practices is disclosed. A system for improving agricultural productivity comprising of; Creating seasonal forecasting models; Carrying out farm monitoring on registration by the farmer in the internal database of the website; Utilizing drones for flying on fields; Capturing the images of the entire farm through the cameras using artificial intelligence; Analyzing the images for identifying problem areas through computer network; Collecting all the data of soil sampling using sensors; and Detecting the weeds and deciding the type of herbicide application.

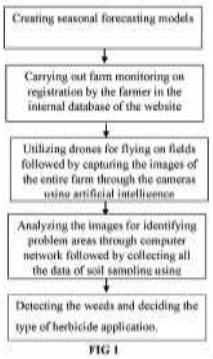

FIG 1

No. of Pages : 11 No. of Claims : 4

(12) PATENT APPLICATION PUBLICATION
(19) INDIA
(22) Date of filing of Application :07/12/2019

(21) Application No.201921050591 A
(43) Publication Date : 11/06/2021

(54) Title of the invention : A SYSTEM FOR DIGITAL VOTING USING BLOCKCHAIN TECHNOLOGY •

(51) International classification	:H04L0009320000, H04L0029060000, G07C0013000000, G06F0021640000, G06Q0020060000	(71)**Name of Applicant :** **1)MESBRO TECHNOLOGIES PRIVATE LIMITED** Address of Applicant :Flat no C/904, Geomatrix Dev, Plot no 29, Sector 25, Kamothe, Raigarh-410209, Maharashtra, India Maharashtra India
(31) Priority Document No	:NA	(72)**Name of Inventor :**
(32) Priority Date	:NA	**1)Mr. Bhaskar Vijay Ajgaonkar**
(33) Name of priority country	:NA	
(86) International Application No	:NA	
Filing Date	:NA	
(87) International Publication No	: NA	
(61) Patent of Addition to Application Number	:NA	
Filing Date	:NA	
(62) Divisional to Application Number	:NA	
Filing Date	:NA	

(57) Abstract :
Accordingly, a system digital voting using block chain technology is disclosed. The present invention helps providing security and integrity. A system for digital voting using block chain technology comprising of; Registering the user in the internal database of the website; verification unit for Verifying the voter; Receiving acknowledgement data to the voter; altering the verification data using the acknowledgement data received from the voter; and analyzer unit for Analyzing automated government miner the transaction.

No. of Pages : 9 No. of Claims : 3

(12) PATENT APPLICATION PUBLICATION
(19) INDIA
(22) Date of filing of Application :07/12/2019

(21) Application No.201921050592 A
(43) Publication Date : 11/06/2021

(54) Title of the invention : A SYSTEM FOR CUSTOMER SERVICE USING ARTIFICIAL INTELLIGENCE •

(51) International classification	:G06Q0030000000, H04M0003510000, G06N0005040000, G06N0003000000, H04M0003493000	(71)**Name of Applicant :** **1)MESBRO TECHNOLOGIES PRIVATE LIMITED** Address of Applicant :Flat no C/904, Geomatrix Dev, Plot no 29, Sector 25, Kamothe, Raigarh-410209, Maharashtra, India Maharashtra India
(31) Priority Document No	:NA	(72)**Name of Inventor :**
(32) Priority Date	:NA	**1)Mr. Bhaskar Vijay Ajgaonkar**
(33) Name of priority country	:NA	
(86) International Application No	:NA	
Filing Date	:NA	
(87) International Publication No	: NA	
(61) Patent of Addition to Application Number	:NA	
Filing Date	:NA	
(62) Divisional to Application Number	:NA	
Filing Date	:NA	

(57) Abstract :
Accordingly, a system for customer service operations using artificial intelligence is disclosed. The system for customer service operations using artificial intelligence comprising of; Analyzing unit for analyzing customer interaction with the website; Analyzing whether automated response system responded to the customer interaction or not; Intimating the living agent about disabling of the automated response system; Sending customer message using the network chat messaging system.

No. of Pages : 9 No. of Claims : 3

(12) PATENT APPLICATION PUBLICATION
(19) INDIA
(22) Date of filing of Application :07/12/2019

(21) Application No.201921050593 A
(43) Publication Date : 11/06/2021

(54) Title of the invention : SYSTEMS AND METHODS FOR UTILIZING CODES AND PICTURES INSIDE A BLOCKCHAIN •

(51) International classification	:G06Q0030060000, G06Q0010080000, H04L0009320000, G06Q0030000000, G06Q0050000000	(71)**Name of Applicant :** **1)MESBRO TECHNOLOGIES PRIVATE LIMITED** Address of Applicant :Flat no C/904, Geomatrix Dev, Plot no 29, Sector 25, Kamothe, Raigarh-410209, Maharashtra, India Maharashtra India
(31) Priority Document No	:NA	(72)**Name of Inventor :**
(32) Priority Date	:NA	**1)Mr. Bhaskar Vijay Ajgaonkar**
(33) Name of priority country	:NA	
(86) International Application No	:NA	
Filing Date	:NA	
(87) International Publication No	: NA	
(61) Patent of Addition to Application Number	:NA	
Filing Date	:NA	
(62) Divisional to Application Number	:NA	
Filing Date	:NA	

(57) Abstract :
Systems and methods enable clients to check the credibility or provenance of physical items before buying or getting physical articles. The methods include examining a code of or an example implanted or fused in a physical article in travel or upon creation, transmitting the checked code and data of the physical item through the Web, producing or refreshing a square dependent on the filtered code and the data, confirming or verifying the square, and putting away the square as a changeless piece of a disseminated record. The code or example is a one of a kind identifiers of the physical item. The methods may incorporate catching a picture of the physical item or an article related with the physical item to be utilized for auxiliary check and creating or refreshing the square in order to remember the acquired picture for the square of the blockchain.

Fig. 1

No. of Pages : 11 No. of Claims : 3

(12) PATENT APPLICATION PUBLICATION
(19) INDIA
(22) Date of filing of Application :07/12/2019

(21) Application No.201921050594 A
(43) Publication Date : 11/06/2021

(54) Title of the invention : A SYSTEM FOR TRACKING PRESCRIPTION MEDICINES •

(51) International classification	:G06Q0050220000, G06Q0010080000, G07F0017000000, G06Q0010100000, G16H0040200000	(71)**Name of Applicant :** **1)MESBRO TECHNOLOGIES PRIVATE LIMITED** Address of Applicant :Flat no C/904, Geomatrix Dev, Plot no 29, Sector 25, Kamothe, Raigarh-410209, Maharashtra, India Maharashtra India
(31) Priority Document No	:NA	(72)**Name of Inventor :**
(32) Priority Date	:NA	**1)Mr. Bhaskar Vijay Ajgaonkar**
(33) Name of priority country	:NA	
(86) International Application No	:NA	
Filing Date	:NA	
(87) International Publication No	: NA	
(61) Patent of Addition to Application Number	:NA	
Filing Date	:NA	
(62) Divisional to Application Number	:NA	
Filing Date	:NA	

(57) Abstract :
A system for tracking prescription medicines between two locations and an inventory of prescription medication at a location comprising of; Generating prescription labels for the prescription orders; Storing prescription data in the internal database of the website on user computer; Scanning the prescription labels after the medication containers have been filled followed by sorting each respective healthcare facility; Comparing the data to the stored prescription data to verify prescriptions; and updating the database with the prescription data.

No. of Pages : 9 No. of Claims : 3

(12) PATENT APPLICATION PUBLICATION
(21) Application No.201921050595 A
(19) INDIA
(22) Date of filing of Application :07/12/2019
(43) Publication Date : 11/06/2021

(54) Title of the invention : SYSTEMS AND METHODS FOR ONLINE COORDINATED EFFORT IN NETWORKING CONDITIONS •

(51) International classification	:G06F0003048200, G01B0011250000, H04N0013398000, G16H0010600000, C07K0016220000	(71)**Name of Applicant :** **1)MESBRO TECHNOLOGIES PRIVATE LIMITED** Address of Applicant :Flat no C/904, Geomatrix Dev, Plot no 29, Sector 25, Kamothe, Raigarh-410209, Maharashtra, India Maharashtra India
(31) Priority Document No	:NA	(72)**Name of Inventor :** **1)Mr. Bhaskar Vijay Ajgaonkar**
(32) Priority Date	:NA	
(33) Name of priority country	:NA	
(86) International Application No	:NA	
Filing Date	:NA	
(87) International Publication No	: NA	
(61) Patent of Addition to Application Number	:NA	
Filing Date	:NA	
(62) Divisional to Application Number	:NA	
Filing Date	:NA	

(57) Abstract :
The system and methods portrayed in this identify with online techniques for coordinated effort in network conditions. The strategies and frameworks are identified with an online clothing demonstrating framework that enables clients to have three-dimensional models of their physical profile made. Clients may buy different products as well as administrations and team up with different clients in the online condition.

No. of Pages : 10 No. of Claims : 3

(12) PATENT APPLICATION PUBLICATION
(19) INDIA
(22) Date of filing of Application :07/12/2019

(21) Application No.201921050596 A
(43) Publication Date : 11/06/2021

(54) Title of the invention : A SYSTEM FOR MONITORING OF HIGH-RISK PATIENTS •

(51) International classification	:G06Q0050220000, G16H0010600000, G16H0010200000, G16H0050200000, G06N0020000000	(71)**Name of Applicant :** **1)MESBRO TECHNOLOGIES PRIVATE LIMITED** Address of Applicant :Flat no C/904, Geomatrix Dev, Plot no 29, Sector 25, Kamothe, Raigarh-410209, Maharashtra, India Maharashtra India
(31) Priority Document No	:NA	(72)**Name of Inventor :** **1)Mr. Bhaskar Vijay Ajgaonkar**
(32) Priority Date	:NA	
(33) Name of priority country	:NA	
(86) International Application No	:NA	
Filing Date	:NA	
(87) International Publication No	: NA	
(61) Patent of Addition to Application Number	:NA	
Filing Date	:NA	
(62) Divisional to Application Number	:NA	
Filing Date	:NA	

(57) Abstract :
Accordingly, a system for monitoring of high-risk patients using artificial intelligence without involvement of patients or patient relatives is disclosed. A system for monitoring of high risk patients using artificial intelligence comprising the steps of; Recording all the patient information in the internal database of the website; Generating a questionnaire by an attending physician as per his requirement about the patient; Fulfilling all the information of the patient in the questionnaire; recording the doctor™s voice through a recording system for making the doctor™s voice audible to the patient for his/her satisfaction; Selecting and choosing questions using AI to create a selection of particular questions based on patient response; Obtaining a reading signal from the monitoring system; Analyzing unit for analysis of patient response on the physician criteria and for determining necessary action required.

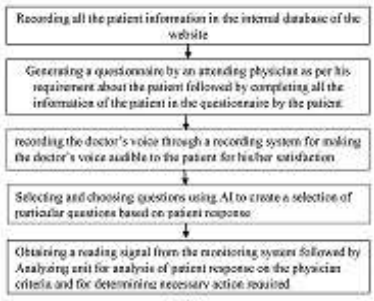

FIG 1

No. of Pages : 11 No. of Claims : 8

(12) PATENT APPLICATION PUBLICATION
(19) INDIA
(22) Date of filing of Application :07/12/2019

(21) Application No.201921050597 A
(43) Publication Date : 11/06/2021

(54) Title of the invention : ARTIFICIAL INTELLIGENCE PROGRAM FOR GROWING TOMATOES IN GREENHOUSE

(51) International classification	:A01G0009240000, A01G0009140000, A01G0025020000, A01G0031020000, A01G0009160000	(71)**Name of Applicant :** **1)MESBRO TECHNOLOGIES PRIVATE LIMITED** Address of Applicant :Flat no C/904, Geomatrix Dev, Plot no 29, Sector 25, Kamothe, Raigarh-410209, Maharashtra, India Maharashtra India
(31) Priority Document No	:NA	(72)**Name of Inventor :**
(32) Priority Date	:NA	**1)Mr. Bhaskar Vijay Ajgaonkar**
(33) Name of priority country	:NA	
(86) International Application No	:NA	
Filing Date	:NA	
(87) International Publication No	: NA	
(61) Patent of Addition to Application Number	:NA	
Filing Date	:NA	
(62) Divisional to Application Number	:NA	
Filing Date	:NA	

(57) Abstract :
The system for growing tomatoes in the greenhouse using artificial intelligence program is disclosed. The system includes designing of artificial intelligence program for growing tomatoes in greenhouse with proper control on temperature, humidity, supply of nutrients, supply of fertilizers, supply of pesticides. The nutrients are distributing to crop through drip irrigation system which is mounted on roof of greenhouse. And this system is controlled by computers. And this artificial intelligence program can be handled remotely as well.

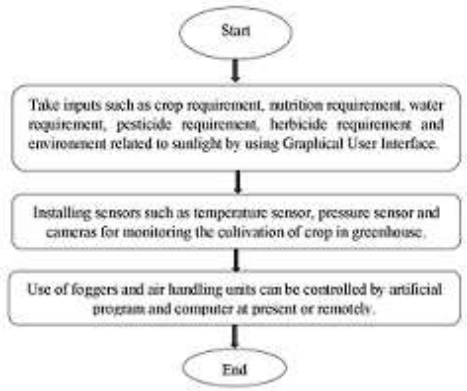

FIG 1

No. of Pages : 7 No. of Claims : 6

(12) PATENT APPLICATION PUBLICATION
(21) Application No.201921050663 A
(19) INDIA
(22) Date of filing of Application :09/12/2019
(43) Publication Date : 11/06/2021

(54) Title of the invention : MULTI-DIRECTIONAL AND MULTI-FUNCTIONAL LIGHTING ASSEMBLY

(51) International classification	:H01H0025000000, F21V0033000000, F21V0031000000, F21V0021260000, F21V0023000000	(71)**Name of Applicant :** **1)ARVIND BHALLAMUDI** Address of Applicant :PLOT NO. B-169 ANANTA, IIT BOMBAY, POWAI, MUMBAI 400076, MAHARASHTRA, INDIA Maharashtra India
(31) Priority Document No	:NA	(72)**Name of Inventor :** **1)ARVIND BHALLAMUDI**
(32) Priority Date	:NA	
(33) Name of priority country	:NA	
(86) International Application No	:NA	
Filing Date	:NA	
(87) International Publication No	: NA	
(61) Patent of Addition to Application Number	:NA	
Filing Date	:NA	
(62) Divisional to Application Number	:NA	
Filing Date	:NA	

(57) Abstract :
ABSTRACT MULTI-DIRECTIONAL AND MULTI-FUNCTIONAL LIGHTING ASSEMBLY A multi-directional and multi-functional lighting assembly (100), said assembly being a modular lamp with a detachable torch, said assembly comprising: a base (30); a torch (10) being a multi-direction-illuminating torch; a joint (20) to couple said torch (10) to said base (30), in that, said joint (20) being a spherical joint (20), said joint (20) not being fixed to said base (30), said joint (20) configured to angularly displace as a ball and socket joint, thereby angularly displacing said torch (10) with respect to said base (30). [[FIGURE 2]]

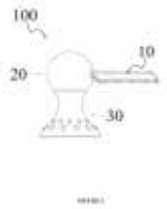

No. of Pages : 20 No. of Claims : 10

(12) PATENT APPLICATION PUBLICATION
(21) Application No.201921050665 A
(19) INDIA
(22) Date of filing of Application :09/12/2019
(43) Publication Date : 11/06/2021

(54) Title of the invention : A METHOD OF PULSED POWER TRANSMISSION AND SYSTEM THEREOF

(51) International classification	:F03G0007100000, H02K0053000000, F02B0075320000, F16J0007000000, F01B0009020000	
(31) Priority Document No	:NA	
(32) Priority Date	:NA	
(33) Name of priority country	:NA	
(86) International Application No	:NA	
Filing Date	:NA	
(87) International Publication No	: NA	
(61) Patent of Addition to Application Number	:NA	
Filing Date	:NA	
(62) Divisional to Application Number	:NA	
Filing Date	:NA	

(71)**Name of Applicant :**
1)SAURABH VIKAS CHAUDHARI
Address of Applicant :SAURABH VIKAS CHAUDHARI Indian S/O Vikas Kisan Chaudhari H. N. 1341, Near Swaminarayan Temple, Savda, Tal. - Raver, Distt. Jalgaon, (Maharashtra) -425502 Maharashtra India
(72)**Name of Inventor :**
1)SAURABH VIKAS CHAUDHARI

(57) Abstract :
A pulsed power transmission method and system is completely different from the conventional continuous power transmission we are using today. A pulsed power transmission system comprising of; a power input unit 501, a pulsed power transmission unit 502, a power receiving unit 503, and a starter unit 504. A power unit comprises a prime mover 100. A pulsed power transmission unit comprises an assembly of at least one rotational to reciprocating motion generating mechanism, at least one intermittent mechanism, at least one a reciprocating to rotational motion generating mechanism 201 with common input shaft 203 and output shaft 204, and a lubrication chamber 112. A power receiving unit 503 comprises a power receiving object 109. And a starter unit 504 comprises a starter mechanism 202.

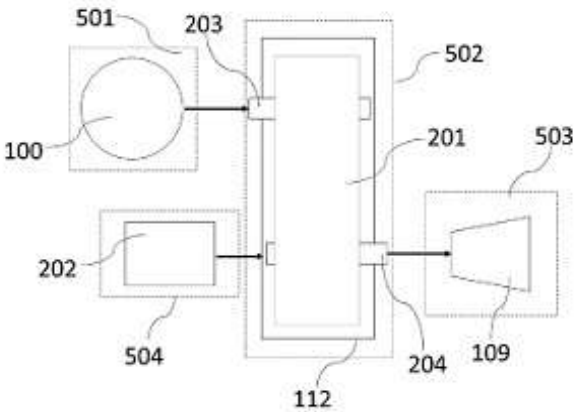

FIG. 1

No. of Pages : 22 No. of Claims : 10

(12) PATENT APPLICATION PUBLICATION
(19) INDIA
(22) Date of filing of Application :09/12/2019

(21) Application No.201921050670 A
(43) Publication Date : 11/06/2021

(54) Title of the invention : A PROCESS FOR RECOVERY OF PROPYLENE AND LPG

(51) International classification	:C10G0011180000, C10G0007020000, C10G0070060000, B01J0029080000, C10G0055060000
(31) Priority Document No	:NA
(32) Priority Date	:NA
(33) Name of priority country	:NA
(86) International Application No	:NA
Filing Date	:NA
(87) International Publication No	: NA
(61) Patent of Addition to Application Number	:NA
Filing Date	:NA
(62) Divisional to Application Number	:NA
Filing Date	:NA

(71)**Name of Applicant :**
1)RELIANCE INDUSTRIES LIMITED
Address of Applicant :3RD FLOOR, MAKER CHAMBER-IV, 222, NARIMAN POINT, MUMBAI-400021, MAHARASHTRA, INDIA Maharashtra India
(72)**Name of Inventor :**
1)YADAV, Manoj
2)LIMBASIYA, Nilamkumar Babubhai
3)MANDAL, Sukumar
4)DAS, Asit Kumar

(57) Abstract :
The present disclosure relates to a process for enhanced recovery of propylene and LPG from a gaseous product mixture produced by contacting a heavy hydrocarbon feed with a fluid catalytic cracking (FCC) catalyst in a fluid catalytic cracker. In the process of the present disclosure, the gaseous product mixture comprising fuel gases obtained after two stage fractionation, compression and separation of the gaseous product mixture, are contacted with unstabilized naphtha, a portion of debutanized hydrocarbons and a portion of de-pentanized hydrocarbons to absorb C3 and C4 hydrocarbons present in the fuel gases, thereby leading to enhanced recovery of C3 and C4 hydrocarbons.

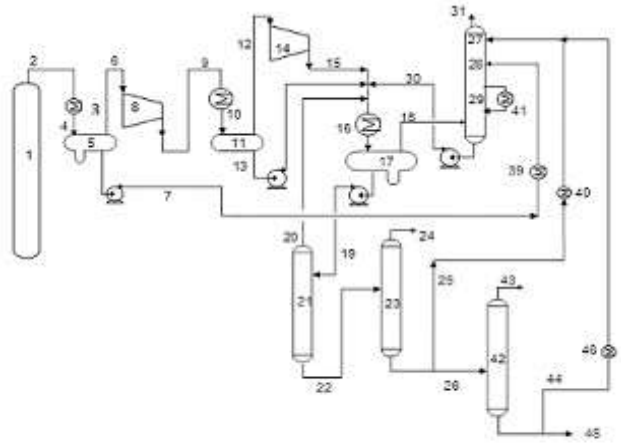

Figure 1

No. of Pages : 17 No. of Claims : 4

(12) PATENT APPLICATION PUBLICATION
(19) INDIA
(22) Date of filing of Application :09/12/2019

(21) Application No.201921050678 A
(43) Publication Date : 11/06/2021

(54) Title of the invention : METHOD OF MANUFACTURING FABRIC FROM CELLULOSIC BASED RECYCLED FIBRE AND GARMENT THEREOF

(51) International classification	:D06M0013453000, D06B0005080000, B32B0029020000, B32B0007040000, D02G0003120000	(71)**Name of Applicant :** **1)Arvind Limited** Address of Applicant :Naroda Road, Ahmedabad - 380025, Gujarat, India Gujarat India (72)**Name of Inventor :** **1)Debasish Halder** **2)Punit Lalbhai** **3)Rahul DattaRoy**
(31) Priority Document No	:NA	
(32) Priority Date	:NA	
(33) Name of priority country	:NA	
(86) International Application No	:NA	
Filing Date	:NA	
(87) International Publication No	: NA	
(61) Patent of Addition to Application Number	:NA	
Filing Date	:NA	
(62) Divisional to Application Number	:NA	
Filing Date	:NA	

(57) Abstract :
The present invention relates to a method of manufacturing fabric from cellulosic based recycled fibre only.

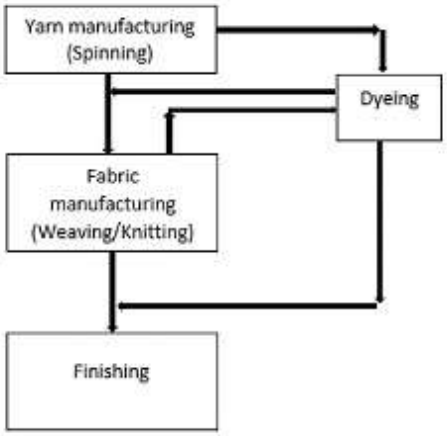

FIG. 1

No. of Pages : 10 No. of Claims : 14

(12) PATENT APPLICATION PUBLICATION
(19) INDIA
(22) Date of filing of Application :09/12/2019
(21) Application No.201921050695 A
(43) Publication Date : 11/06/2021

(54) Title of the invention : STABLE TOPICAL PHARMACEUTICAL COMPOSITIONS OF LULICONAZOLE •

(51) International classification	:A61K0009000000, A61K0031417800, A61K0047100000, C07D0409060000, A61K0009060000
(31) Priority Document No	:NA
(32) Priority Date	:NA
(33) Name of priority country	:NA
(86) International Application No	:NA
Filing Date	:NA
(87) International Publication No	: NA
(61) Patent of Addition to Application Number	:NA
Filing Date	:NA
(62) Divisional to Application Number	:NA
Filing Date	:NA

(71)**Name of Applicant :**
1)CADILA HEALTHCARE LIMITED
Address of Applicant :Zydus Corporate Park, Scheme No. 63, Survey No. 536, Khoraj (Gandhinagar), Nr. Vaishnodevi Circle, Sarkhej Gandhinagar Highway, Ahmedabad 382481, Gujarat, India Gujarat India
(72)**Name of Inventor :**
1)MUTHAIYYAN, Kannan Essakimuthu
2)UKAWALA, Mukeshkumar Hirabhai
3)PATEL, Jitendrakumar Dashrathlal
4)PRAJAPATI, Amitkumar Rameshbhai

(57) Abstract :
ABSTRACT STABLE TOPICAL PHARMACEUTICAL COMPOSITIONS OF LULICONAZOLE • The present invention relates to stable pharmaceutical compositions for topical administration on skin having increased permeability comprising luliconazole and combination of diethylene glycol monoethyl ether and medium chain triglycerides. The present invention also relates to processes for preparation of such pharmaceutical compositions.

No. of Pages : 18 No. of Claims : 9

(12) PATENT APPLICATION PUBLICATION
(21) Application No.201921050698 A
(19) INDIA
(22) Date of filing of Application :09/12/2019
(43) Publication Date : 11/06/2021

(54) Title of the invention : MICROSPHERES LOADED MENTHOL BASED MUCOADHESIVE GEL FOR MOUTH ULCER

(51) International classification	:A61K0009000000, A61K0009700000, A61K0047100000, A61K0009160000, A61Q0011000000	(71)**Name of Applicant :** **1)KAUR CHANCHAL DEEP** Address of Applicant :SHRI RAWATPURA SARKAR INSTITUTE OF PHARMACY, BEHIND HOLIDAY RESORT, NEAR POWER GRID COR., KUMHARI, DIST - DURG (C.G.) - 490042, CHATTISGARH, INDIA. Chattisgarh India **2)JOSHI RENJIL** **3)GUPTA ANSHITA**
(31) Priority Document No	:NA	
(32) Priority Date	:NA	
(33) Name of priority country	:NA	
(86) International Application No	:NA	
Filing Date	:NA	
(87) International Publication No	: NA	(72)**Name of Inventor :** **1)KAUR CHANCHAL DEEP** **2)JOSHI RENJIL** **3)GUPTA ANSHITA**
(61) Patent of Addition to Application Number	:NA	
Filing Date	:NA	
(62) Divisional to Application Number	:NA	
Filing Date	:NA	

(57) Abstract :
The present invention relates to a mucoadhesive gel composition for mouth ulcers comprising a microbead loaded with L-ascorbic acid and/or a pharmaceutically acceptable salt thereof; a gelling agent; a cooling agent; a humectant; and a preservative.

No. of Pages : 29 No. of Claims : 10

(12) PATENT APPLICATION PUBLICATION
(19) INDIA
(22) Date of filing of Application :09/12/2019
(21) Application No.201921050710 A
(43) Publication Date : 11/06/2021

(54) Title of the invention : NOVEL PHYTOACTIVE EXTRACTS BASED FORMULATIONS OF HELICTERES ISORA FOR MUSCULAR AND NERVINE DISORDERS

(51) International classification	:A23L0033105000, A61K0008970000, H04B0007060000, A01N0057200000, A61K0036185000
(31) Priority Document No	:NA
(32) Priority Date	:NA
(33) Name of priority country	:NA
(86) International Application No	:NA
Filing Date	:NA
(87) International Publication No	: NA
(61) Patent of Addition to Application Number	:NA
Filing Date	:NA
(62) Divisional to Application Number	:NA
Filing Date	:NA

(71)**Name of Applicant :**
1)SONI DEEPENDRA
Address of Applicant :SHRI RAWATPURA SARKAR SCHOOL OF PHARMACY, SHRI RAWATPURA SARKAR UNIVERSITY, DHANELI, RAIPUR, CHHATTISGARH - 490042, INDIA. Chattisgarh India
2)KAUR CHANCHAL DEEP
3)GUPTA ANSHITA
(72)**Name of Inventor :**
1)SONI DEEPENDRA
2)KAUR CHANCHAL DEEP
3)GUPTA ANSHITA

(57) Abstract :
The present invention relates to preparation of plant extracts (Alcoholic, hydroalcoholic, organic, aqueous) based formulations (gels, creams, lotions, ointments, tablet, capsules, sprays, oils) of Helicteres isora plant for the treatment of muscular and nervine disorders which includes muscular stiffness, joint pain, nerve inflammation, nerve pain, inflammation and other related disorders thereof.

No. of Pages : 23 No. of Claims : 7

(12) PATENT APPLICATION PUBLICATION
(21) Application No.201921050736 A
(19) INDIA
(22) Date of filing of Application :09/12/2019
(43) Publication Date : 11/06/2021

(54) Title of the invention : N-(BENZO[D]THIAZOL-2-YL)-2-(2-(2-OXO-2H-CHROMEN-3-YL)-1H-BENZO[D]IMIDAZOL-1-YL)ACETAMIDE DERIVATIVES AND USE THEREOF.

(51) International classification	:H01M0010440000, G11B0017049000, G03G0015080000, A24D0003060000, B65D0006220000
(31) Priority Document No	:NA
(32) Priority Date	:NA
(33) Name of priority country	:NA
(86) International Application No	:NA
Filing Date	:NA
(87) International Publication No	: NA
(61) Patent of Addition to Application Number	:NA
Filing Date	:NA
(62) Divisional to Application Number	:NA
Filing Date	:NA

(71)**Name of Applicant :**
1)KALPESH B. THAKER
Address of Applicant :House No. Microcare Laboratory & Tuberculosis Research Centre, City Surat State Gujarat Country India Pin code 395003 Gujarat India
2)DR. HITESH D. PATEL
3)SMITA D. RAJANI
4)DHANJI P. RAJANI
5)MAHESH S. VASAVA
(72)**Name of Inventor :**
1)SMITA D. RAJANI
2)MAHESH S. VASAVA
3)DHANJI P. RAJANI
4)DR. HITESH D. PATEL
5)KALPESH B. THAKER

(57) Abstract :
TITLE : N-(BENZO[D]THIAZOL-2-YL)-2-(2-(2-OXO-2H-CHROMEN-3-YL)-1H-BENZO[D]IMIDAZOL-1-YL)ACETAMIDE DERIVATIVES AND USE THEREOF. ABSTRACT A compound of A N-(benzo[d]thiazol-2-yl)-2-(2-(2-oxo-2H-chromen-3-yl)-1H-benzo[d]imidazol-1-yl) acetamide derivative compounds of formula (I), pharmaceutical composition. In particular the present invention provides a novel N-(benzo[d] thiazol-2-yl) -2-(2-(2-oxo-2H-chromen-3-yl)-1H- benzo[d] imidazol-1-yl) acetamide derivative compounds as anti-bacterial, antituberculosis, MDR-TB, anti-malarial, or anti- oxidant agent. Further the present invention relates to a pharmaceutical compositions containing the compounds N-(benzo[d]thiazol-2-yl)-2-(2-(2-oxo-2H-chromen-3-yl)-1H-benzo[d]imidazol-1-yl) acetamide derivative compounds of formula (I) for treatment of fungal infections.

No. of Pages : 36 No. of Claims : 10

(12) PATENT APPLICATION PUBLICATION
(21) Application No.201921050782 A
(19) INDIA
(22) Date of filing of Application :09/12/2019
(43) Publication Date : 11/06/2021

(54) Title of the invention : AN IMPROVED SHAPED CATALYST COMPOSITE AND A PROCESS FOR UPGRADING HYDROCARBON STREAM

(51) International classification	:B01J0037000000, B01J0037030000, H04N0021810000, B01J0029700000, B01J0029400000
(31) Priority Document No	:NA
(32) Priority Date	:NA
(33) Name of priority country	:NA
(86) International Application No	:NA
Filing Date	:NA
(87) International Publication No	: NA
(61) Patent of Addition to Application Number	:NA
Filing Date	:NA
(62) Divisional to Application Number	:NA
Filing Date	:NA

(71)**Name of Applicant :**
1)RELIANCE INDUSTRIES LIMITED
Address of Applicant :3rd Floor, Maker Chamber-IV, 222, Nariman Point, Mumbai 400 021, Maharashtra, India Maharashtra India
(72)**Name of Inventor :**
1)KRISHNA REDDY JAKKIDI
2)MANTRI KSHUDIRAM
3)GANESAN RAMAN
4)JAGANNATH DAS
5)RAKSHVIR JASRA

(57) Abstract :
[0063]. The instant disclosure is in the field of chemical sciences, more particularly to synthetic chemistry and material science. The present disclosure generally relates to an improved shaped catalyst composite; and a method for upgrading hydrocarbon stream through removal of olefin impurities present therein and producing a hydrocarbon stream substantially free form olefinic contaminants using the said catalyst composite. In particular, the present invention relates an improved shaped catalyst composite comprising of a treated zeolite selected from MFI and MWW family of zeolites, and a compositing material selected from group of compounds consisting of oxides of elements from group III A and group IV A, or a combination thereof. More particularly, the present invention relates to a mesoporous MCM-22 composite catalyst useful for reducing olefin content from a commercial C8+ aromatic stream.

No. of Pages : 19 No. of Claims : 20

(12) PATENT APPLICATION PUBLICATION
(19) INDIA
(22) Date of filing of Application :09/12/2019

(21) Application No.201921050826 A
(43) Publication Date : 11/06/2021

(54) Title of the invention : METHODS AND SYSTEMS FOR DETERMINING MISSING DATA IN IMBALANCED DATASETS USING AUTOMATED PREDICTING FUNCTIONS

(51) International classification	:H01M0010440000, G11B0017049000, G03G0015080000, A24D0003060000, B65D0006220000	(71)**Name of Applicant :** **1)Tata Consultancy Services Limited** Address of Applicant :Nirmal Building, 9th Floor, Nariman Point, Mumbai - 400021, Maharashtra, India Maharashtra India
(31) Priority Document No	:NA	(72)**Name of Inventor :** **1)KUNDE, Shruti**
(32) Priority Date	:NA	**2)MISHRA, Mayank**
(33) Name of priority country	:NA	**3)NAMBIAR, Manoj**
(86) International Application No	:NA	**4)PANDIT, Amey**
Filing Date	:NA	**5)SHROFF, Gautam**
(87) International Publication No	: NA	**6)GUPTA, Shashank**
(61) Patent of Addition to Application Number	:NA	
Filing Date	:NA	
(62) Divisional to Application Number	:NA	
Filing Date	:NA	

(57) Abstract :
This disclosure relates to determining missing data in imbalanced datasets using automated predicting functions. State-of-the-art methods are time bound which means they are dependent on time series data, involve high computation cost, do not factor in co-relations between features and may also end up introducing bias in data. The present disclosure provides a high performance, faster and efficient method for determining missing data in a plurality of imbalanced datasets by first determining dependencies across a plurality of features in the plurality of imbalanced datasets and then automatically generating a set of predictive functions using machine learning models. The set of automated predicted functions provide good coverage to the plurality of imbalanced datasets and are applied to a plurality of generative models. Output of the method of present disclosure is a set of probabilistic labels that are assigned to one or more missing values in the plurality of imbalanced datasets.

No. of Pages : 40 No. of Claims : 12

(12) PATENT APPLICATION PUBLICATION
(19) INDIA
(22) Date of filing of Application :10/12/2019

(21) Application No.201921050885 A
(43) Publication Date : 11/06/2021

(54) Title of the invention : AN APPARATUS AND A METHOD FOR INDUCTION HARDENING OF CRANKSHAFTS

(51) International classification	:A23K0020147000, C12P0019040000, B82Y0030000000, C22B0003000000, C08L0097020000
(31) Priority Document No	:NA
(32) Priority Date	:NA
(33) Name of priority country	:NA
(86) International Application No	:NA
Filing Date	:NA
(87) International Publication No	: NA
(61) Patent of Addition to Application Number	:NA
Filing Date	:NA
(62) Divisional to Application Number	:NA
Filing Date	:NA

(71)**Name of Applicant :**
1)Bharat Forge Limited
Address of Applicant :Mundhwa, Pune - 411036, Maharashtra, India Maharashtra India
(72)**Name of Inventor :**
1)Dr. Babasaheb Neelkanth KALYANI
2)Mr. Sushant Baburao PUSTAKE
3)Mr. Dhananjay Dinkarrao GOTMARE,
4)Mr. Sachin Kashiram TANKASALI
5)Mr. Vidyanad Gopal POWAR
6)Mr. Babu Arun ISHWARE

(57) Abstract :
The invention discloses a method and apparatus for induction hardening to avoid defects during induction hardening of a crankshaft, especially by avoiding overheating of the region adjoining to the area being induction hardened and without any expensive or complex changes to the induction hardening equipment or its software programming. The apparatus of the invention is a heat sink adapter (A) made in two parts - the journal-side half (6) is the heat extractor, and the pin-side half (8) simply to facilitate mounting of the heat sink adapter (A) on the web (5). Without this apparatus, the heat will entirely be transferred to the adjoining regions only. The method of the invention discloses the step of providing a heat sink adapter by ensuring there is no gap, preferably between journal-side half (6) of said heat sink adapter (A) and the external shape or surface of web (5). Representative Figure: Figure 3

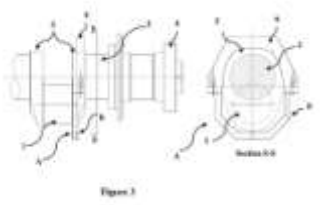

No. of Pages : 24 No. of Claims : 11

(12) PATENT APPLICATION PUBLICATION
(19) INDIA
(22) Date of filing of Application :10/12/2019

(21) Application No.201921051004 A
(43) Publication Date : 11/06/2021

(54) Title of the invention : A DIGITAL SYSTEM FOR THE MANAGEMENT OF RESPIRATORY DISEASES.

(51) International classification	:A61M0015000000, G01N0033680000, A61B0005020500, A61B0005000000, A61M0016120000	(71)**Name of Applicant :** **1)GAJANAN DEVIDAS SAKHARE** Address of Applicant :1101, Marigold, Suyog Nisarga, Lohegaon Road, Wagholi, Pune- 412207 Maharashtra India (72)**Name of Inventor :** **1)GAJANAN DEVIDAS SAKHARE** **2)SHARDUL UMESH JOSHI**
(31) Priority Document No	:NA	
(32) Priority Date	:NA	
(33) Name of priority country	:NA	
(86) International Application No	:NA	
Filing Date	:NA	
(87) International Publication No	: NA	
(61) Patent of Addition to Application Number	:NA	
Filing Date	:NA	
(62) Divisional to Application Number	:NA	
Filing Date	:NA	

(57) Abstract :
The present invention discloses a device for detection and management of a respiratory disease in a patient. It further relates to the detection and providing means of management of said respiratory disease by said patient or a medical practitioner or a caregiver remotely. It also relates to the detection of respiratory capacity of said patient and use of a dose counter that helps in the effective management of said respiratory disease in said patient.

FIGURE 1: Scheme of the Invention

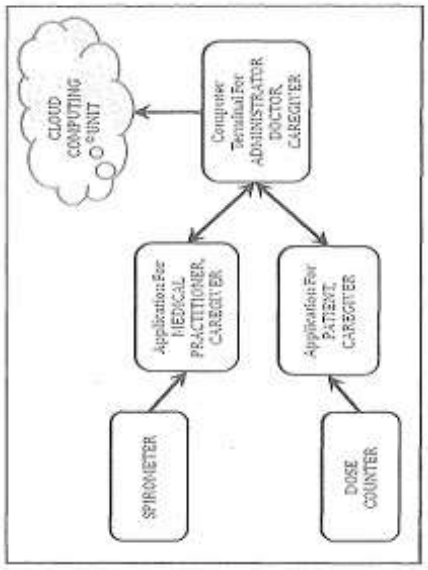

No. of Pages : 23 No. of Claims : 11

(12) PATENT APPLICATION PUBLICATION
(21) Application No.201921051123 A
(19) INDIA
(22) Date of filing of Application :10/12/2019
(43) Publication Date : 11/06/2021

(54) Title of the invention : METHODS AND SYSTEMS FOR USING MULTI-CONNECTIVITY FOR MULTICAST TRANSMISSIONS IN A COMMUNICATION SYSTEM

(51) International classification	:H04W0004060000, H04W0076150000, H04W0072000000, H04L0012180000, H04L0005000000	(71)**Name of Applicant :** **1)Indian Institute of Technology Bombay** Address of Applicant :IIT Bombay, Powai, Mumbai Maharashtra 400076, India Maharashtra India
(31) Priority Document No	:NA	(72)**Name of Inventor :** **1)Abhay Karandikar**
(32) Priority Date	:NA	**2)Pranav Kumar Jha**
(33) Name of priority country	:NA	**3)Prasanna Chaporkar**
(86) International Application No	:NA	**4)Sadaf Ul Zuhra**
Filing Date	:NA	
(87) International Publication No	: NA	
(61) Patent of Addition to Application Number	:NA	
Filing Date	:NA	
(62) Divisional to Application Number	:NA	
Filing Date	:NA	

(57) Abstract :
Methods and systems for using multi-connectivity for multicast transmissions in a communication system. A method disclosed herein includes using multi-connectivity that enables at least one User Equipment (UE) to receive at least one Multimedia Broadcast Multicast Service (MBMS) content from the plurality of BSs at a time on different physical resource blocks. The method further includes enabling the plurality of BSs to maintain independent MBMS sessions for transmitting the at least one MBMS content to the at least one UE without synchronization. The method further includes enabling the at least one UE to combine the at least one MBMS content received from the plurality of BSs or to select a MBMS content from the received at least one MBMS content. FIG. 5

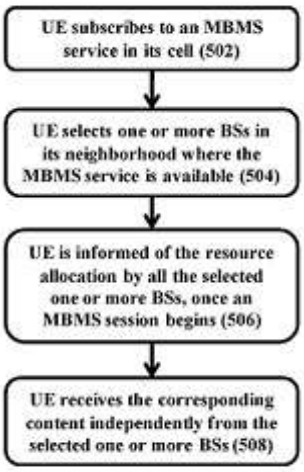

FIG. 5

No. of Pages : 52 No. of Claims : 32

(12) PATENT APPLICATION PUBLICATION
(21) Application No.202024015328 A
(19) INDIA
(22) Date of filing of Application :07/04/2020
(43) Publication Date : 11/06/2021

(54) Title of the invention : TERMINAL CONTROL METHOD AND APPARATUS, TERMINAL AND STORAGE MEDIUM

(51) International classification	:H04N0005235000, H04N0005232000, H04L0027000000, G06F0003048800, G05B0015020000
(31) Priority Document No	:201911234423.9
(32) Priority Date	:05/12/2019
(33) Name of priority country	:China
(86) International Application No	:NA
Filing Date	:NA
(87) International Publication No	: NA
(61) Patent of Addition to Application Number	:NA
Filing Date	:NA
(62) Divisional to Application Number	:NA
Filing Date	:NA

(71)**Name of Applicant :**
1)BEIJING XIAOMI MOBILE SOFTWARE CO., LTD.
Address of Applicant :No. 018, Floor 8, Building 6, Yard 33, Middle Xierqi Road, Haidian District, Beijing 100085, China
China

(72)**Name of Inventor :**
1)BAI, Dongshu
2)ZHUANG, Jiajia
3)LIU, Rong
4)ZHENG, Qing

(57) Abstract :
The present disclosure discloses a terminal control method and apparatus, a terminal and a storage medium, which belong to the field of computer technologies. The method includes: receiving (101, 501, 901) a focus mode starting instruction; entering (102) a focus mode according to the focus mode starting instruction; performing (103, 907), in response to an application-invoking request received within a duration of the focus mode, process control on an application being invoked; and exiting (104, 908) the focus mode when the duration of the focus mode ends.

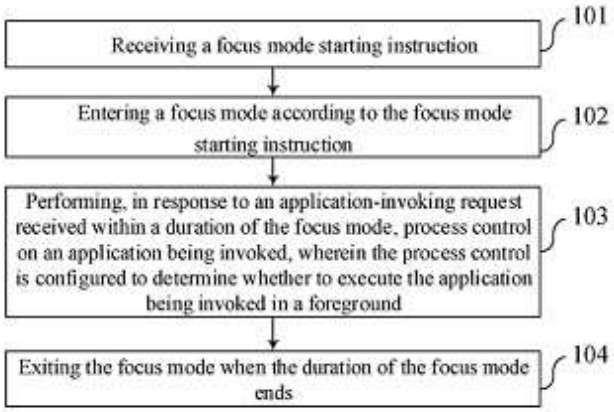

FIG. 1

No. of Pages : 41 No. of Claims : 15

(12) PATENT APPLICATION PUBLICATION
(19) INDIA
(22) Date of filing of Application :18/09/2020

(21) Application No.202024040559 A
(43) Publication Date : 11/06/2021

(54) Title of the invention : IMAGING LENS ASSEMBLY AND ELECTRONIC DEVICE

(51) International classification	:G02B0013000000, G02B0007020000, H04N0005225000, G02B0001040000, G02B0005000000
(31) Priority Document No	:108144800
(32) Priority Date	:06/12/2019
(33) Name of priority country /region	:Taiwan
(86) International Application No	:NA
Filing Date	:NA
(87) International Publication No	: NA
(61) Patent of Addition to Application Number	:NA
Filing Date	:NA
(62) Divisional to Application Number	:NA
Filing Date	:NA

(71)**Name of Applicant :**
1)LARGAN PRECISION CO., LTD.
Address of Applicant :No.11, Jingke Rd., Nantun Dist., Taichung City 408, Taiwan
(72)**Name of Inventor :**
1)Jyun-Jia CHENG
2)Lin-An CHANG
3)Ming-Ta CHOU
4)Cheng-Feng LIN

(57) Abstract :
An imaging lens assembly has an optical axis, and includes a plastic carrier element and an imaging lens element set. The plastic carrier element includes an object-side surface, an image-side surface, an outer surface and an inner surface. The object-side surface includes an object-side opening. The image-side surface includes an image-side opening. The inner surface is connected to the object-side opening and the image-side opening. The imaging lens element set is disposed in the plastic carrier element, and includes at least three lens elements, each of at least two adjacent lens elements of the lens elements includes a first axial assembling structure, the first axial assembling structures are corresponding to and connected to each other. A solid medium interval is maintained between the adjacent lens elements and the inner surface. The solid medium interval is directly contacted with the adjacent lens elements and the inner surface.

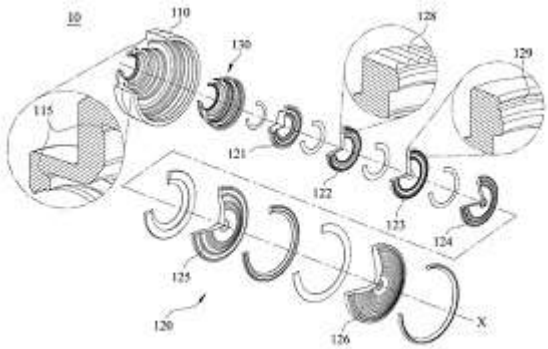

Fig. 1A

No. of Pages : 115 No. of Claims : 22

(12) PATENT APPLICATION PUBLICATION
(19) INDIA
(22) Date of filing of Application :23/11/2020

(21) Application No.202024050945 A
(43) Publication Date : 11/06/2021

(54) Title of the invention : RENEWAL OF ONE-TIME KEYS

(51) International classification	:H04L0029060000, H04L0009080000, H04L0012280000, H04W0012040000, H04L0029080000	(71)**Name of Applicant :** **1)SANGLE-FERRIERE, Bruno** Address of Applicant :47 Boulevard Beausjour, 75016 PARIS, France. France
(31) Priority Document No	:1913754	(72)**Name of Inventor :** **1)SANGLE-FERRIERE, Bruno**
(32) Priority Date	:04/12/2019	
(33) Name of priority country	:France	
(86) International Application No	:NA	
Filing Date	:NA	
(87) International Publication No	: NA	
(61) Patent of Addition to Application Number	:NA	
Filing Date	:NA	
(62) Divisional to Application Number	:NA	
Filing Date	:NA	

(57) Abstract :
Method for securing communication within a system comprising at least one server and at least two appliances able to communicate with the server and with each other, wherein a pair of appliances communicating together and having at least one shared one-time encryption key for securing communication between the two has at least one other shared one-time encryption key supplied by the server following the connection of only one of the two appliances to said server. Figure 1 is the representative figure.

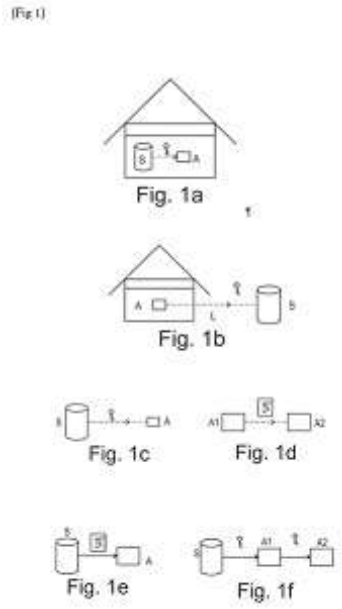

No. of Pages : 76 No. of Claims : 20

(12) PATENT APPLICATION PUBLICATION
(19) INDIA
(22) Date of filing of Application :24/11/2020

(21) Application No.202024051129 A
(43) Publication Date : 11/06/2021

(54) Title of the invention : INTEGRATED TRANSMISSION WITH CVP AND POWER ELECTRONICS APPARATUS

(51) International classification	:F16H0057040000, F16H0037080000, F16H0057020000, F16H0003000000, H02J0007020000
(31) Priority Document No	:16/707453
(32) Priority Date	:09/12/2019
(33) Name of priority country	:U.S.A.
(86) International Application No	:NA
Filing Date	:NA
(87) International Publication No	: NA
(61) Patent of Addition to Application Number	:NA
Filing Date	:NA
(62) Divisional to Application Number	:NA
Filing Date	:NA

(71)**Name of Applicant :**
1)DEERE & COMPANY
Address of Applicant :One John Deere Place, Moline, Illinois, 61265, USA. U.S.A.
(72)**Name of Inventor :**
1)Stacy K. Worley
2)Ronald D. Bremner

(57) Abstract :
An integrated transmission includes a transmission housing having a first housing face through which the input shaft extends; a CVP housed within the housing; and a transmission assembly. The transmission assembly includes an input arrangement contained within the housing and having at least one input transmission component selectively coupling the engine power and the CVP power; a variator arrangement contained within the housing, configured to receive the engine and CVP power and to selectively transfer the engine power, CVP power, and a summing of engine and CVP power as variator output power; and a transmission gear arrangement contained within the transmission housing engaged with the variator arrangement and configured to provide a selective gear reduction for transmission to an output shaft that extends out of the transmission housing. The integrated transmission includes a power electronics apparatus arranged within or on the transmission housing and electrically coupled to the CVP. FIG 2

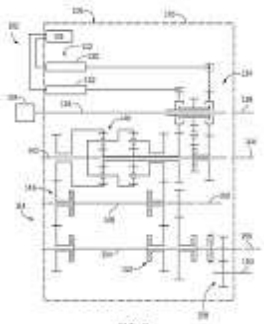

FIG. 2

No. of Pages : 48 No. of Claims : 20

(12) PATENT APPLICATION PUBLICATION
(19) INDIA
(22) Date of filing of Application :30/11/2020

(21) Application No.202024052138 A
(43) Publication Date : 11/06/2021

(54) Title of the invention : FLUSH MECHANISM FOR A TOILET TANK WITH AXIAL AND VERTICAL BLOCKING

(51) International classification	:A61B0017000000, A47K0013100000, E03D0001140000, E01D0019100000, H01L0033200000	(71)**Name of Applicant :** **1)FOMINAYA, S.A.** Address of Applicant :Carretera del Pla, s/n, 46117 Btera (Valencia), Spain Spain
(31) Priority Document No	:19383088.2	(72)**Name of Inventor :** **1)FOMINAYA GONZ • LEZ, Pablo**
(32) Priority Date	:05/12/2019	
(33) Name of priority country	:EPO	
(86) International Application No	:NA	
Filing Date	:NA	
(87) International Publication No	: NA	
(61) Patent of Addition to Application Number	:NA	
Filing Date	:NA	
(62) Divisional to Application Number	:NA	
Filing Date	:NA	

(57) Abstract :
A flush mechanism for a toilet tank with axial and vertical blocking which comprises an elongated part fitted inside a centred hole that passes through a top base (4a) of an actuating bridge (4) of the discharger (5), in which the position of said elongated part can be adjusted in its axial direction, and where the elongated part (1) is associated with a push mechanism, which once activated moves the actuating bridge (4) of the discharger (5) downwards through the elongated part (1), and it comprises first means for axial blocking (3, 8), and it is characterised in that it also comprises blocking means (10, 20) for the actuating bridge (4), in such a manner that the negative movement of the actuating bridge (4) in the Z axis is blocked.

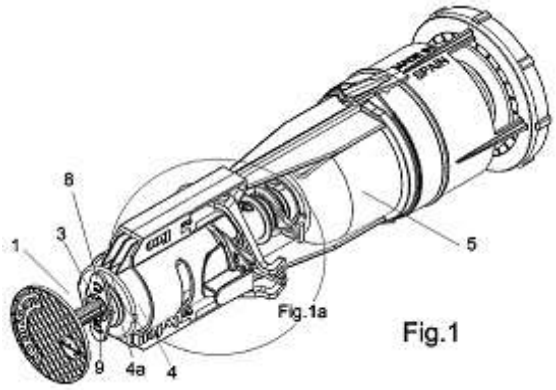

Fig.1

No. of Pages : 16 No. of Claims : 8

(12) PATENT APPLICATION PUBLICATION
(19) INDIA
(22) Date of filing of Application :02/02/2021

(21) Application No.202127004436 A
(43) Publication Date : 11/06/2021

(54) Title of the invention : P2X3 RECEPTOR ANTAGONISTS

(51) International classification	:A61P0025040000, C07D0403120000, A61K0031402500, C07D0413100000, C07C0233310000
(31) Priority Document No	:1811452.0
(32) Priority Date	:12/07/2018
(33) Name of priority country	:U.K.
(86) International Application No	:PCT/EP2019/068681
Filing Date	:11/07/2019
(87) International Publication No	:WO 2020/011921
(61) Patent of Addition to Application Number	:NA
Filing Date	:NA
(62) Divisional to Application Number	:NA
Filing Date	:NA

(71)**Name of Applicant :**
1)RECORDATI INDUSTRIA CHIMICA E FARMACEUTICA SPA
Address of Applicant :Via Matteo Civitali 1 20148 Milano Italy
(72)**Name of Inventor :**
1)GRAZIANI, Davide
2)MENEGON, Sergio
3)ANGELICO, Patrizia
4)RIVA, Carlo

(57) Abstract :
This invention relates to compounds of formula (I); and their use as antagonists of P2X3 and P2X2/3 receptor activity, pharmaceutical compositions comprising such compounds, and methods of treatment therewith. Compounds of the invention can be used for the treatment and/or prevention of pain and chronic pain and tolerance to analgesic, respiratory disorders and dysfunctions, and treatment of overactive bladder, bladder pain syndrome, dysuria and in general in genitourinary diseases, cardiovascular disorders and more in general for the potential treatment of visceral organ diseases and disorders characterized by the involvement of P2X3 and P2X2/3 receptors.

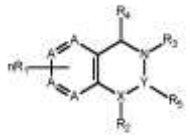

(I)

No. of Pages : 188 No. of Claims : 15

(12) PATENT APPLICATION PUBLICATION
(21) Application No.202127004438 A
(19) INDIA
(22) Date of filing of Application :02/02/2021
(43) Publication Date : 11/06/2021

(54) Title of the invention : METHOD FOR INHIBITING UNWANTED RADICAL POLYMERISATION OF ACRYLIC ACID PRESENT IN A LIQUID PHASE P

(51) International classification	:C07C0051500000, C07C0057040000, C07C0051440000, C08F0020060000, H01B0003440000
(31) Priority Document No	:18185760.8
(32) Priority Date	:26/07/2018
(33) Name of priority country	:EPO
(86) International Application No	:PCT/EP2019/069079
Filing Date	:16/07/2019
(87) International Publication No	:WO 2020/020697
(61) Patent of Addition to Application Number	:NA
Filing Date	:NA
(62) Divisional to Application Number	:NA
Filing Date	:NA

(71)**Name of Applicant :**
1)BASF SE
Address of Applicant :Carl-Bosch-Strasse 38 67056 Ludwigshafen am Rhein Germany
(72)**Name of Inventor :**
1)JANSSEN, Nicole
2)ZUROWSKI, Peter
3)HAMMON, Ulrich
4)HAREMZA, Sylke

(57) Abstract :
The invention relates to a method for inhibiting unwanted radical polymerisation of acrylic acid present in a liquid phase P, wherein: the acrylic acid content of P is at least 10% by weight; the liquid phase P contains 25 to 1,000 ppm by weight glyoxal in relation to the weight of the acrylic acid in P; and furfural is added to the liquid phase P, in an amount that results in a furfural content of 25 to 1,000 ppm by weight in relation to the weight of the acrylic acid in P. The invention further relates to a liquid phase P, wherein: the acrylic acid content of P is at least 10% by weight; and the liquid phase P contains 25 to 1,000 ppm by weight glyoxal and 25 to 1,000 ppm by weight furfural, each in relation to the weight of the acrylic acid in P.

No. of Pages : 23 No. of Claims : 24

(12) PATENT APPLICATION PUBLICATION
(19) INDIA
(22) Date of filing of Application :02/02/2021

(21) Application No.202127004439 A
(43) Publication Date : 11/06/2021

(54) Title of the invention : PROCESS FOR PREPARING A ZEOLITIC MATERIAL HAVING A FRAMEWORK TYPE FER

(51) International classification	:C01B0039440000, B01J0029650000, B01J0029700000, C01B0039480000, C01B0039020000
(31) Priority Document No	:18185968.7
(32) Priority Date	:27/07/2018
(33) Name of priority country	:EPO
(86) International Application No	:PCT/EP2019/070157
Filing Date	:26/07/2019
(87) International Publication No	:WO 2020/021054
(61) Patent of Addition to Application Number	:NA
Filing Date	:NA
(62) Divisional to Application Number	:NA
Filing Date	:NA

(71)**Name of Applicant :**
1)BASF SE
Address of Applicant :Carl-Bosch-Strasse 38 67056 Ludwigshafen am Rhein Germany
(72)**Name of Inventor :**
1)PARVULESCU, Andrei-Nicolae
2)MCGUIRE, Robert
3)MUELLER, Ulrich
4)KROMER, Alexander

(57) Abstract :
The present invention relates to a process for preparing a zeolitic material having a framework type FER and having a framework structure comprising silicon, aluminum, and oxygen, said process comprising (i) preparing an aqueous synthesis mixture comprising water; a zeolitic material having a framework type other than FER and having a framework structure comprising silicon, aluminum, and oxygen; a source of silicon other than the zeolitic material having a framework type other than FER; an organic structure directing agent comprising piperidine; a source of an alkali metal; and a source of a base; (ii) subjecting the aqueous synthesis mixture prepared according to (i) to hydrothermal synthesis conditions comprising heating the synthesis mixture to a temperature in the range of from 140 to 190 °C and keeping the synthesis mixture at a temperature in this range under autogenous pressure, obtaining a mother liquor comprising a solid material which comprises the zeolitic material having a framework type FER.

No. of Pages : 49 No. of Claims : 19

(12) PATENT APPLICATION PUBLICATION
(21) Application No.202127004465 A
(19) INDIA
(22) Date of filing of Application :02/02/2021
(43) Publication Date : 11/06/2021

(54) Title of the invention : FEED SUPPLEMENT FOR ANIMALS AND MAN

(51) International classification	:A23K0050100000, A23K0020100000, A23K0020280000, A23K0010300000, A23K0050300000
(31) Priority Document No	:2021290
(32) Priority Date	:12/07/2018
(33) Name of priority country	:Netherlands
(86) International Application No	:PCT/NL2019/050292
Filing Date	:20/05/2019
(87) International Publication No	:WO 2020/013685
(61) Patent of Addition to Application Number	:NA
Filing Date	:NA
(62) Divisional to Application Number	:NA
Filing Date	:NA

(71)**Name of Applicant :**
1)KOCH, Carl Frederik Maurits
Address of Applicant :Keulenstraat 19a 7418 ET Deventer Netherlands
(72)**Name of Inventor :**
1)KOCH, Carl Frederik Maurits

(57) Abstract :
The invention is in the field of a feed or food supplement for animals or humans, a feed supplement for use as a medicament, for improving digestion of dairy animals, such as cows, for improving milk production, for improving health, especially in the gastrointestinal tract, for reducing illness, for improving skin quality, a feed comprising the feed supplement, and a method of forming said feed supplement.

No. of Pages : 11 No. of Claims : 18

(12) PATENT APPLICATION PUBLICATION
(19) INDIA
(22) Date of filing of Application :02/02/2021

(21) Application No.202127004466 A
(43) Publication Date : 11/06/2021

(54) Title of the invention : ENHANCED EXTENDED DEPTH OF FOCUSING ON BIOLOGICAL SAMPLES

(51) International classification	:G06T0005500000, H04N0005232000, G02B0021340000, G06T0007110000, G06T0007130000
(31) Priority Document No	:62/713076
(32) Priority Date	:01/08/2018
(33) Name of priority country	:U.S.A.
(86) International Application No	:PCT/US2019/044639
Filing Date	:01/08/2019
(87) International Publication No	:WO 2020/028648
(61) Patent of Addition to Application Number	:NA
Filing Date	:NA
(62) Divisional to Application Number	:NA
Filing Date	:NA

(71)**Name of Applicant :**
1)CDX MEDICAL IP, INC.
Address of Applicant :2 Executive Blvd. Suffern, NY 10901 U.S.A.
(72)**Name of Inventor :**
1)RUTENBERG, Mark
2)SCOTT, Richard
3)TJON, Robert
4)SELTZER, Paul

(57) Abstract :
A system and method for constructing a digital composite image of a three- dimensional biological sample. The system includes an optical system that captures images of cells and tissue presented on a specimen slide. The system systematically acquires a stack of images at different segments across the specimen slide. For each segment, the system dynamically calculates an optimal focal plane. Once an optimal focal plane is determined for each of the stacks of images, the system generates a composite image by copying the sharpest objects from each of the optimal focal planes.

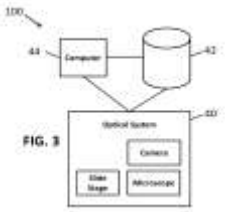

FIG. 3

No. of Pages : 21 No. of Claims : 14

(12) PATENT APPLICATION PUBLICATION
(19) INDIA
(22) Date of filing of Application :02/02/2021

(21) Application No.202127004467 A
(43) Publication Date : 11/06/2021

(54) Title of the invention : SESSION ESTABLISHMENT METHOD AND APPARATUS

(51) International classification	:H04L0029080000, H04L0029060000, H04W0076150000, H04L0012460000, H04L0012751000
(31) Priority Document No	:NA
(32) Priority Date	:NA
(33) Name of priority country	:NA
(86) International Application No	:PCT/CN2019/100280
Filing Date	:12/08/2019
(87) International Publication No	:WO 2021/026746
(61) Patent of Addition to Application Number	:NA
Filing Date	:NA
(62) Divisional to Application Number	:NA
Filing Date	:NA

(71)**Name of Applicant :**
1)GUANGDONG OPPO MOBILE TELECOMMUNICATIONS CORP., LTD.
Address of Applicant :No. 18, Haibin Road, Wusha, Chang'an Dongguan, Guangdong 523860 China
(72)**Name of Inventor :**
1)YANG, Haorui
2)LIU, Jianhua

(57) Abstract :
The present application provides a session establishment method, applied to a terminal device, and comprising: sending a session establishment request to a network device, the session establishment request requesting to establish a first session, the session establishment request comprising first indication information, and the first indication information indicating that the first session is a deactivated session or an activated session; and receiving a response message for the session establishment request from the network device. If the number of DRBs reaches a number threshold, the terminal device can request, by means of the first indication information, the network device to establish a deactivated first session, and when the number of DRBs is less than the number threshold, the terminal device or the network device can activate the first session. Compared with a solution of newly establishing a first session after the number of DRBs is less than a number threshold, the solution of first establishing a deactivated session and then activating the session can establish an activated session quickly and reduce data transmission delay.

No. of Pages : 29 No. of Claims : 76

(12) PATENT APPLICATION PUBLICATION
(21) Application No.202127004488 A
(19) INDIA
(22) Date of filing of Application :02/02/2021
(43) Publication Date : 11/06/2021

(54) Title of the invention : COMPOSITION AND USES THEREOF IN AGRICULTURE

(51) International classification	:A01N0065030000, C12N0015820000, A01N0065200000, A01N0065400000, A01N0065000000
(31) Priority Document No	:102018000007292
(32) Priority Date	:18/07/2018
(33) Name of priority country	:Italy
(86) International Application No	:PCT/IB2019/056153
Filing Date	:18/07/2019
(87) International Publication No	:WO 2020/016825
(61) Patent of Addition to Application Number	:NA
Filing Date	:NA
(62) Divisional to Application Number	:NA
Filing Date	:NA

(71)**Name of Applicant :**
1)VALAGRO S.P.A.
Address of Applicant :Via Cagliari 1 - Zona Industriale 66041 Atessa (Chieti) Italy
(72)**Name of Inventor :**
1)BIASONE, Alessandro
2)DI TOMMASO, Donata
3)POVERO, Giovanni
4)LORITO, Vincenzo
5)PIAGGESI, Alberto

(57) Abstract :
The present invention refers to a composition based on algal and/or plant extracts and its use in agriculture to improve water use efficiency and/or water productivity in plants and/or agricultural water management thus resulting in increased yield of crop plants per unit water used.

No. of Pages : 35 No. of Claims : 15

(12) PATENT APPLICATION PUBLICATION
(21) Application No.202127004489 A
(19) INDIA
(22) Date of filing of Application :02/02/2021
(43) Publication Date : 11/06/2021

(54) Title of the invention : INTERNAL VALVE TRANSMITTER FLANGE

(51) International classification	:A61J0001200000, A62B0009020000, A61F0002240000, F16K0037000000, F16K0031040000
(31) Priority Document No	:16/145291
(32) Priority Date	:28/09/2018
(33) Name of priority country	:U.S.A.
(86) International Application No	:PCT/US2019/037938
Filing Date	:19/06/2019
(87) International Publication No	:WO 2020/068197
(61) Patent of Addition to Application Number	:NA
Filing Date	:NA
(62) Divisional to Application Number	:NA
Filing Date	:NA

(71)**Name of Applicant :**
1)ROSEMOUNT INC.
Address of Applicant :6021 Innovation Boulevard Shakopee, Minnesota 55379 U.S.A.
(72)**Name of Inventor :**
1)ETHERIDGE, Matthew Lee
2)STROTH, Trevor Thomas

(57) Abstract :
A transmitter flange (104) includes a flange body having a valve opening (508) therein, the valve opening (508) having a valve seat (510), and an internal valve (504) configured to be retained in the valve opening (508). A retaining ring (506) may be configured to thread into the valve opening (508) to further retain the internal valve (504) within the opening.

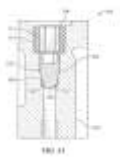

No. of Pages : 8 No. of Claims : 20

(12) PATENT APPLICATION PUBLICATION
(19) INDIA
(22) Date of filing of Application :02/02/2021

(21) Application No.202127004490 A
(43) Publication Date : 11/06/2021

(54) Title of the invention : METHOD AND APPARATUS FOR DETERMINING A MASS OF A DROPLET FROM SAMPLE DATA COLLECTED FROM A LIQUID DROPLET DISPENSATION SYSTEM

(51) International classification	:G09G0003360000, H04L0001000000, G01N0035100000, C12Q0001688600, G01N0033500000
(31) Priority Document No	:62/701061
(32) Priority Date	:20/07/2018
(33) Name of priority country	:U.S.A.
(86) International Application No	:PCT/US2019/042700
Filing Date	:19/07/2019
(87) International Publication No	:WO 2020/018967
(61) Patent of Addition to Application Number	:NA
Filing Date	:NA
(62) Divisional to Application Number	:NA
Filing Date	:NA

(71)**Name of Applicant :**
1)BRIGHTON TECHNOLOGIES, LLC
Address of Applicant :5129 Kieley Place Cincinnati, OH 45217 U.S.A.
(72)**Name of Inventor :**
1)KOVAL, Richard David
2)JEAN-GILLES, Guyrandy
3)GILPIN, Andrew Davison
4)GEREN, Michael Anthony
5)DILLINGHAM, Raymond Giles
6)BARRY, Timothy James

(57) Abstract :
A method and apparatus for collecting sample data from a liquid droplet dispensation system is provided.

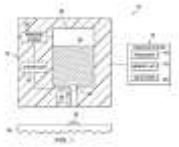

No. of Pages : 12 No. of Claims : 18

(12) PATENT APPLICATION PUBLICATION
(19) INDIA
(22) Date of filing of Application :02/02/2021

(21) Application No.202127004519 A
(43) Publication Date : 11/06/2021

(54) Title of the invention : METHOD FOR TRANSMITTING DATA IN INTERNET OF VEHICLES AND TERMINAL DEVICE

(51) International classification	:H04W0072040000, H04L0029080000, H04L0005000000, H04W0076140000, H04W0072120000
(31) Priority Document No	:NA
(32) Priority Date	:NA
(33) Name of priority country	:NA
(86) International Application No	:PCT/CN2018/094680
Filing Date	:05/07/2018
(87) International Publication No	:WO 2020/006736
(61) Patent of Addition to Application Number	:NA
Filing Date	:NA
(62) Divisional to Application Number	:NA
Filing Date	:NA

(71)**Name of Applicant :**
1)GUANGDONG OPPO MOBILE TELECOMMUNICATIONS CORP., LTD.
Address of Applicant :No.18 Haibin Road, Wusha, Chang'an Dongguan, Guangdong 523860 China
(72)**Name of Inventor :**
1)LU, Qianxi
2)LIN, Huei-Ming

(57) Abstract :
A method for transmitting data in an Internet of Vehicles and a terminal device, allowing the determination of a resource used for multiple transmissions of a sidelink, and favoring an increase in the reliability of data transmissions. The method comprises: a first terminal receives first control information transmitted by a second terminal, the first control information being used for determining resource information used for multiple transmissions of a sidelink; and the first terminal determines, on the basis of the first control information, a resource used for multiple transmissions of the sidelink.

No. of Pages : 34 No. of Claims : 20

(12) PATENT APPLICATION PUBLICATION
(19) INDIA
(22) Date of filing of Application :02/02/2021

(21) Application No.202127004522 A
(43) Publication Date : 11/06/2021

(54) Title of the invention : RANDOM ACCESS METHOD, TERMINAL DEVICE, AND NETWORK DEVICE

(51) International classification	:H04W0074080000, H04W0072040000, H04W0074000000, H04W0076110000, H04W0072140000
(31) Priority Document No	:201810846902.5
(32) Priority Date	:27/07/2018
(33) Name of priority country	:China
(86) International Application No	:PCT/CN2019/097929
Filing Date	:26/07/2019
(87) International Publication No	:WO 2020/020352
(61) Patent of Addition to Application Number	:NA
Filing Date	:NA
(62) Divisional to Application Number	:NA
Filing Date	:NA

(71)**Name of Applicant :**
1)GUANGDONG OPPO MOBILE TELECOMMUNICATIONS CORP., LTD.
Address of Applicant :NO.18, Haibin Road, Wusha, Chang'an Dongguan, Guangdong 523860 China
(72)**Name of Inventor :**
1)XU, Weijie

(57) Abstract :
Embodiments of the present application provide a random access method, a terminal device, and a network device. During a random access process, the terminal device sends a preamble sequence and uplink information in MSG 1 and receives a random access response of the network device in MSG 2, thereby implementing random access by means of a two-step random access process and reducing time delay generated in the random access process. The method comprises: a terminal device sending a first preamble sequence and first uplink information on a first PRACH resource; and the terminal device receiving a first PDCCH scrambled by a first RA-RNTI, and implementing a subsequent random access process on the basis of a reception state of the first PDCCH, wherein the first RA-RNTI is obtained on the basis of the first PRACH resource.

S210 A terminal device sends a first preamble sequence and first uplink information on a first PRACH resource
S220 The terminal device receives a first PDCCH scrambled by a first RA-RNTI, and implements a subsequent random access process on the basis of a reception state of the first PDCCH, wherein the first RA-RNTI is obtained on the basis of the first PRACH resource

No. of Pages : 28 No. of Claims : 36

CONTINUED TO PART- 2