पेटेंट कार्यालय
शासकीय जर्नल

OFFICIAL JOURNAL
OF
THE PATENT OFFICE

निर्गमन सं. 27/2021	शुक्रवार	दिनांक: 02/07/2021
ISSUE NO. 27/2021	FRIDAY	DATE: 02/07/2021

पेटेंट कार्यालय का एक प्रकाशन
PUBLICATION OF THE PATENT OFFICE

INTRODUCTION

In view of the recent amendment made in the Patents Act, 1970 by the Patents (Amendment) Act, 2005 effective from 01st January 2005, the Official Journal of The Patent Office is required to be published under the Statute. This Journal is being published on weekly basis on every Friday covering the various proceedings on Patents as required according to the provision of Section 145 of the Patents Act 1970. All the enquiries on this Official Journal and other information as required by the public should be addressed to the Controller General of Patents, Designs & Trade Marks. Suggestions and comments are requested from all quarters so that the content can be enriched.

(Shri Rajendra Ratnoo)
CONTROLLER GENERAL OF PATENTS, DESIGNS & TRADE MARKS

2ND JULY, 2021

CONTENTS

THE PATENT OFFICE
KOLKATA, 02/07/2021
Address of the Patent Offices/Jurisdictions
The following are addresses of all the Patent Offices located at different places having their Territorial Jurisdiction on a Zonal basis as shown below:-

1	Office of the Controller General of Patents, Designs & Trade Marks, Boudhik Sampada Bhavan, Near Antop Hill Post Office,S.M.Road,Antop Hill, Mumbai – 400 037 Phone: (91)(22) 24123311, Fax : (91)(22) 24123322 E-mail: cgpdtm@nic.in	4	The Patent Office, Government of India, Intellectual Property Rights Building, G.S.T. Road, Guindy, Chennai – 600 032. Phone: (91)(44) 2250 2081-84 Fax : (91)(44) 2250 2066 E-mail: chennai-patent@nic.in ❖ The States of Andhra Pradesh, Telangana, Karnataka, Kerala, Tamil Nadu and the Union Territories of Puducherry and Lakshadweep.
2	The Patent Office, Government of India, Boudhik Sampada Bhavan, Near Antop Hill Post Office,S.M.Road,Antop Hill, Mumbai – 400 037 Phone: (91)(22) 24137701 Fax: (91)(22) 24130387 E-mail: mumbai-patent@nic.in ❖ The States of Gujarat, Maharashtra, Madhya Pradesh, Goa and Chhattisgarh and the Union Territories of Daman and Diu & Dadra and Nagar Haveli	5	The Patent Office (Head Office), Government of India, Boudhik Sampada Bhavan, CP-2, Sector –V, Salt Lake City, Kolkata- 700 091 Phone: (91)(33) 2367 1943/44/45/46/87 Fax: (91)(33) 2367 1988 E-Mail: kolkata-patent@nic.in ❖ Rest of India
3	The Patent Office, Government of India, Boudhik Sampada Bhavan, Plot No. 32., Sector-14, Dwarka, New Delhi – 110075 Phone: (91)(11) 25300200 & 28032253 Fax: (91)(11) 28034301 & 28034302 E.mail: delhi-patent@nic.in ❖ The States of Haryana, Himachal Pradesh, Jammu and Kashmir, Punjab, Rajasthan, Uttar Pradesh, Uttaranchal, Delhi and the Union Territory of Chandigarh.		

Website: www.ipindia.nic.in
www.patentoffice.nic.in

All applications, notices, statements or other documents or any fees required by the Patents Act, 1970 and The Patents (Amendment) Act, 2005 or by the Patents (Amendment) Rules, 2006 will be received only at the appropriate offices of the Patent Office.

Fees: The Fees may either be paid in cash or may be sent by Bank Draft or Cheques payable to the Controller of Patents drawn on a scheduled Bank at the place where the appropriate office is situated.

पेटेंट कार्यालय

कोलकाता, दिनांक 02/07/2021

• कार्यालयों के क्षेत्राधिकार के पते

विभिन्न जगहों पर स्थित पेटेंट कार्यालय के पते आंचलिक आधार पर दर्शित उनके प्रादेशिक अधिकार क्षेत्र के साथ नीचे दिए गए है:-

1	कार्यालय : महानियंत्रक, एकस्व, अभिकल्प तथा व्यापार चिहन, एंटोप हिल डाकघर के समीप, एस. एम. रोड, एंटोप हिल, मुम्बई- 400 037, भारत, फोन: (91) (22) 24123311 फ़ैक्स: (91) (22) 24123322 ई. मेल: cgpdtm@nic.in	4	पेटेंट कार्यालय, भारत सरकार इंटेलेक्चुअल प्रॉपर्टी राइट्स बिल्डिंग, इंडस्ट्रियल इस्टेट एसआईडीसीओ आरएमडी गोडाउन एरिया एडजसेन्ट टु ईगल फ्लास्क, जी. एस. टी. रोड, गायन्डी चेन्नई - 600 032. फोन: (91)(44) 2250 2081-84 फ़ैक्स: (91)(44) 2250-2066 ई. मेल: chennai-patent@nic.in ❖ आन्ध्र प्रदेश, तेलंगाना, कर्नाटक, केरल, तमिलनाडु तथा पुडुचेरी राज्य क्षेत्र एवं संघ शासित क्षेत्र, लक्षदीप
2	पेटेंट कार्यालय, भारत सरकार बौद्धिक संपदा भवन, एंटोप हिल डाकघर के समीप, एस. एम. रोड, एंटोप हिल, मुम्बई- 400 037, फोन: (91) (22) 24137701 फ़ैक्स: (91) (22) 24130387 ई. मेल: Mumbai-patent@nic.in ❖ गुजरात, महाराष्ट्र, मध्य प्रदेश, गोवा तथा छत्तीसगढ़ राज्य क्षेत्र एवं संघ शासित क्षेत्र, दमन तथा दीव, दादर और नगर हवेली.	5	पेटेंट कार्यालय, भारत सरकार कोलकाता, (प्रधान कार्यालय) बौद्धिक संपदा भवन, सीपी-2, सेक्टर- V, साल्ट लेक सिटी, कोलकाता-700 091, भारत. फोन: (91)(33) 2367 1943/44/45/46/87 फ़ैक्स:/Fax: (91)(33) 2367 1988 ई. मेल: kolkata-patent@nic.in ❖ भारत का अवशेष क्षेत्र
3	पेटेंट कार्यालय, भारत सरकार बौद्धिक संपदा भवन, प्लॉट सं. 32, सेक्टर- 14, द्वारका, नई दिल्ली- 110 075. फोन: (91)(11) 25300200, 28032253 फ़ैक्स: (91)(11) 28034301, 28034302 ई. मेल: delhi-patent@nic.in हरियाणा, हिमाचल प्रदेश, जम्मू तथा कश्मीर, पंजाब,राजस्थान, उत्तर प्रदेश, दिल्ली तथा उत्तरांचल राज्य क्षेत्रों, एवं संघ शासित क्षेत्र चंडीगढ़		

वेबसाइट: http://www.ipindia.nic.in
www.patentoffice.nic.in

पेटेंट अधिनियम, 1970 तथा पेटेंट (संशोधन) अधिनियम, 2005 अथवा पेटेंट (संशोधन) नियम, 2006 द्वारा वांछित सभी आवेदन, सूचनाए, विवरण या अन्य दस्तावेज़ या कोई शुल्क पेटेंट कार्यालय के केवल उपयुक्त कार्यालय में स्वीकृत होंगे।

शुल्क: शुल्क या तो नगद रूप में या Controller of Patents के नाम में देय बैंक ड्राफ्ट या चेक के द्वारा भेजी जा सकती है जो उसी स्थान के किसी अनुसूचित बैंक में प्रदत्त हो जहाँ उपयुक्त कार्यालय स्थित है ।

SPECIAL NOTICE

18 Months publication as required under Section 11A of the Patents Act, 1970 as amended by the Patents (Amendment) Act, 2005.

Notice is hereby given that any person at any time before the grant of Patent may give representation by way of opposition to the Controller of Patents at appropriate office on the ground and in a manner specified under section 25(1) of the Patents (Amendment) Act, 2005 read with Rule 55 of the Patents (Amendment) Rules, 2006.

Notice is also given that if any interested person requests for copies of the complete specification, drawing and abstract of any application already published, the photocopy of the same can be supplied by the Patent Office as per the jurisdiction on payment of prescribed fees of Rs.8/- per page. If any further details are required to be obtained, the same can be provided by the respective Patent Offices on request.

(Shri Rajendra Ratnoo)
CONTROLLER GENERAL OF PATENTS, DESIGNS & TRADE MARKS

SPECIAL NOTICE

Under the new provision of the Patents Act, 1970 as amended by the Patents (Amendment) Act, 2005 and Rules there under, Publication of the matter relating to Patents in the Official Gazette of India Part III, Section 2 has been discontinued and instead The Official Journal of the Patent Office is being published containing all the activities of The Patent Office such as publication of all the patent applications after 18th months , grant of patents & all other information in respect of the proceedings as required under the provisions of the Patents (Amendment) Act, 2005 and Rules thereunder on weekly basis on every **Friday**.

The Journal is uploaded in the website every Friday. So Paper form and CD-ROM form of the Journal are discontinued from 01/01/2009.

SPECIAL NOTICE

Every effort is being taken to publish all the patent applications under section 11(A) of the Patents Act. However, if duplication of publication of any application is found, then earlier date of publication will be taken for the purpose of provisional protection for applicant and Patent Office will grant Patent not before six months from the date of second publication, provided that there is there is no third party representation.

Early Publication:

The following patent applications have been published under section 11A (2) of The Patents (Amendment) Act 2005 and rule 24A of The Patents (Amendment) Rules, 2006. Any person may file representation by way of opposition to the Controller of Patents at the appropriate office against the grant of the patent in the prescribed manner under section 25(1) of the Patents (Amendment) Act 2005 read with the rule 55 of The Patents (Amendment) Rules, 2006:

(12) PATENT APPLICATION PUBLICATION

(21) Application No.202011053564 A

(19) INDIA

(22) Date of filing of Application :09/12/2020

(43) Publication Date : 02/07/2021

(54) Title of the invention : A FORMULATION AND/OR COMBINATION TO PREVENT PULMONARY DISEASES INCLUDING SARS-COV-2

(51) International classification	:A61K0031352000, A61K0031375000, A23L0033150000, A61K0031560000, A61K0031704800	(71)**Name of Applicant :** **1)Pawan Kumar Goel** Address of Applicant :SCO.76, 1st Floor, MDC, Swastik Vihar, Sector 5, Panchkula - 134114 Haryana India (72)**Name of Inventor :** **1)Dr Manoj Bali**
(31) Priority Document No	:NA	
(32) Priority Date	:NA	
(33) Name of priority country	:NA	
(86) International Application No	:NA	
Filing Date	:NA	
(87) International Publication No	: NA	
(61) Patent of Addition to Application Number	:NA	
Filing Date	:NA	
(62) Divisional to Application Number	:NA	
Filing Date	:NA	

(57) Abstract :

The present invention relates to a formulation to prevent pulmonary diseases associated with SARS-COV -2 infections, comprising fixed proportion of Quercetin, Ursolic Acid, and Ascorbic Acid (Vitamin-C), wherein the Quercetin Ursolic Acid, and Ascorbic Acid (Vitamin-C) are in a proportion of X:Y:Z where X,Y,Z may vary independent of each other from 0 to 15.

No. of Pages : 16 No. of Claims : 6

(12) PATENT APPLICATION PUBLICATION
(21) Application No.202111022902 A
(19) INDIA
(22) Date of filing of Application :22/05/2021
(43) Publication Date : 02/07/2021

(54) Title of the invention : SINGLE CYLINDER TWIN VACUUM PUMP OXYGEN GENERATION SYSTEM HAVING UNEQUAL ADSORPTION AND REGENERATION TIMINGS TWO VERSIONS SMALLER PORTABLE ONE FOR HEALTHY INDIVIDUAL ,BIGGER ONE FOR PATIENTS ,MEDICAL SETUP AND MULTIPLE CYLINDER SET UP FOR INDUSTRIAL APPLICATION

(51) International classification	:B01D0053040000, B01D0053047000, C01B0013020000, B01J0020180000, B01D0053020000
(31) Priority Document No	:NA
(32) Priority Date	:NA
(33) Name of priority country	:NA
(86) International Application No	:NA
Filing Date	:NA
(87) International Publication No	: NA
(61) Patent of Addition to Application Number	:NA
Filing Date	:NA
(62) Divisional to Application Number	:NA
Filing Date	:NA

(71)**Name of Applicant :**
1)Dr. Satish Chander Narula
Address of Applicant :A-D 49-A Pitam Pura, outer ring road, near Madhuban Chowk, New Delhi 110088 Delhi India
(72)**Name of Inventor :**
1)Dr. Satish Chander Narula
2)Divam Narula

(57) Abstract :
Air separation is currently one of the most important gas operations in the chemical industry . It is performed typically at large-scale by cryogenic distillation to produce high-purity product streams. Adsorption processes have the potential to substitute the energy- and capital-intensive distillation operations with the right adsorbent and process technology for several applications. Currently, commercial adsorption technologies of different production scales, i.e., PSA (Pressure Swing Adsorption) & VPSA (Vacuum Pressure Swing Adsorption), exist to realize this separation to generate oxygen-rich streams as well as nitrogen-rich streams, which are useful in a variety of industries Traditionally, adsorption-based air separation employs materials that selectively adsorb nitrogen in order to recover high-purity oxygen as light-product, e.g., commercial zeolites. Nitrogen-rich product streams may also be generated by applying carbon molecular sieves (CMS), modifying cycle configuration & process operating conditions . Face mask is fitted in low power vacuum pump with electrostatic filter placed at distance from face mask to facilitate effortless respiration with healthy air devoid of dust, Bacteria and viruses in pulsating mode in coordination of respiratory cycle of individual . It is more important in view of current Covid 19 situation to provide healthy air free of corona virus to all. In the proposed design Dust filter position changed from pre compressor to base of Gas separation chamber the dust filter is kept on metallic frame work to withstand the weight of overlying zeolite powder. Instead of two cylinders and one compressor ,in this patent one cylinder and two compressors used in one cycle .One ultra high vacuum pump having high Air flow capacity placed at the other end of system near oxygen cylinder. Other Vacuum pump or Liquid jet vacuum pump with low capability placed before cylinder to regenerate zeolite after saturation with nitrogen towards beginning of regeneration phase of cycle .Unequal timing ratio of adsorption and regeneration ranging from 1/4th to 1/20th adsorption to regeneration time in each cycle. In this design different location of valves in comparison to conventional PSA system are proposed. Deep fridge used to separate water vapours ,Carbon di oxide gas and other low boiling point constituents of air to provide highest purity of oxygen. For industrial applications deep fridge up to -200 degree Celsius temperature to separate nitrogen, argon oxygen and other rare gases from liquefied air to get more profit in such competitive environment. At the base of cylinder design is improved from conical to flat with multiple air inlets to increase the speed of oxygen production .In desorption/regeneration phase of cycle dust cleaning made feasible along with exit of nitrogen. Even Horizontal laying of cylinder containing zeolite may also be employed along with Vibrating of zeolite containing cylinder with vibrator in horizontal and vertical modes. Without oxygen generator with electrostatic filter One submersible pump having week vacuum capacity will be sued between dusty filter and face mask .Dust filter will remove dust, Bacteria and viruses from air and shall provide clean and healthy air comfortable to user Single cylinder cycle Adsorption phase After start of Vacuum cum Booster pump in this system ,Middle valve will be kept in closed position while bottom and top valve will be in open position . High vacuum will be created which will start air flow from Air inlet . Air reaches in cylinder through dust filter present over the metallic support . Air is passed through Zeolite powder to selectively adsorb Nitrogen simultaneously Oxygen is passed through top of cylinder and reaches at the inlet of vacuum pump . The outlet of vacuum pump is connected to the inlet of Oxygen cylinder. This Adsorption phase remains on for 20 seconds. Regeneration Phase After completion of Adsorption phase ,the regeneration phase starts for three seconds duration. During this phase Bottom valve and Top valve are closed and middle valve is in open position to facilitate flush out of nitrogen under vacuum instead of zero pressure utilised in PSA and VPSA systems into environment or collection into separate cylinder of nitrogen collection cylinders. Vibrating system at bottom aids in Maximum adsorption of nitrogen and flushing out of nitrogen in regeneration phase there by causing return of zeolite in original state to make them available for next cycle . These two phase go on sequentially which constitute one complete cycle This technology not only ensures the highest oxygen purity, but also decreases the need to frequently replace sieve beds, reducing the overall cost of ownership. Vacuum is the most efficient way to desorb nitrogen from sieve material while delivering the highest purity of oxygen. This vacuum adsorption process leaves sieve material as good as it can possibly be at the start of each sieve bed cycle. No wasted oxygen and More energy efficient.

No. of Pages : 12 No. of Claims : 7

(12) PATENT APPLICATION PUBLICATION
(21) Application No.202111023015 A
(19) INDIA
(22) Date of filing of Application :24/05/2021
(43) Publication Date : 02/07/2021

(54) Title of the invention : BIOMASS COOKING STOVE INTEGRATED THERMOELECTRIC GENERATOR WITH LATENT HEAT STORAGE MATERIAL

(51) International classification	:H01L0035300000, F28D0020020000, F01N0005020000, C09K0005060000, F24B0005020000	(71)**Name of Applicant :** **1)Eswaramoorthy Muthusamy** Address of Applicant :School of Mechanical Engineering Shri Mata Vaishno Devi University Katra Jammu & Kashmir India (72)**Name of Inventor :** **1)Eswaramoorthy Muthusamy**
(31) Priority Document No	:NA	
(32) Priority Date	:NA	
(33) Name of priority country	:NA	
(86) International Application No	:NA	
Filing Date	:NA	
(87) International Publication No	: NA	
(61) Patent of Addition to Application Number	:NA	
Filing Date	:NA	
(62) Divisional to Application Number	:NA	
Filing Date	:NA	

(57) Abstract :
The present invention provides an innovative design of biomass cooking stove having an integrated thermoelectric generator (bismuth telluride) with latent heat storage materials. The generated electricity from thermoelectric generator used to drive the blower to keeps the air movement in combustion chamber for clean cooking. It comprises metallic stove, thermoelectric generator, latent heat storage materials, insulation, and air flow passage as primary and main section. The present innovation offers an economical, more efficient and self-driven system by eliminating external supply of electricity. The positioning and integration of thermoelectric generator and latent heat storage materials an excellent combination in thermal design. The present invention helps to an enhancement of heat transfer rate and thermal performance by air in the combustion chamber, higher value of enthalpy reaction, heat storage for additional time operation of thermoelectric generator when compared to conventional biomass cooker.

No. of Pages : 7 No. of Claims : 5

(12) PATENT APPLICATION PUBLICATION
(21) Application No.202111025066 A
(19) INDIA
(22) Date of filing of Application :05/06/2021
(43) Publication Date : 02/07/2021

(54) Title of the invention : WIDEBAND CIRCULAR PATCH SLOTTED MICROSTRIP ANTENNA FOR 5G MOBILE APPLICATIONS

(51) International classification	:H01Q0001380000, H01Q0005100000, H01Q0001480000, H04L0012260000, H01Q0013200000
(31) Priority Document No	:NA
(32) Priority Date	:NA
(33) Name of priority country	:NA
(86) International Application No	:NA
Filing Date	:NA
(87) International Publication No	: NA
(61) Patent of Addition to Application Number	:NA
Filing Date	:NA
(62) Divisional to Application Number	:NA
Filing Date	:NA

(71)**Name of Applicant :**
1)Pavan Kumar Shukla
Address of Applicant :B 504 Ajnara grace society, Rajnagar Extension GHAZIABAD, Uttar Pradesh 201017 Uttar Pradesh India
2)Achyuta Nand Mishra
3)Ravindra Kumar Yadav
4)Deepak kumar gupta
(72)**Name of Inventor :**
1)Pavan Kumar Shukla
2)Achyuta Nand Mishra
3)Ravindra Kumar Yadav
4)Deepak kumar gupta

(57) Abstract :
The extensive research in 5G technology is a clear sign of technological revolution to meet the ever-increasing demands and requirements of high speed communication system. The present work utilizes the iteration technique to develop a slot loaded circular patch microstrip antenna for 5G mobile application. As, the conventional microstrip antenna suffers from narrow bandwidth, the proposed work provides an alternative choice for increasing the bandwidth that resonates in multiband frequencies. Parametric analysis is also done on various parameters like substrate thickness, substrate material and insertion of slots to improve antenna performances. The antenna is designed on low cost FR4 substrate with thickness of 1.6 mm. Through a lumped port, a microstrip feed line couples electromagnetic energy to the radiator. Further, the simulated resulted are in good agreement with the experimental sets, which meets the requirements of wideband and 5G multiband technologies. The proposed antenna resonates at 3.35 GHz, 6.68 GHz, 8.84 GHz, 12.62 GHz, 14.06 GHz and 15.68 GHz with bandwidth of 100 MHz, 630 MHz, 540 MHz, 990 MHz and 6390 MHz respectively.

No. of Pages : 14 No. of Claims : 5

(12) PATENT APPLICATION PUBLICATION
(21) Application No.202111025098 A
(19) INDIA
(22) Date of filing of Application :06/06/2021
(43) Publication Date : 02/07/2021

(54) Title of the invention : SOLAR COOKING POT ENCAPSULATION OF LATENT HEAT STORAGE MATERIAL IN LONGITUDINAL DOME CONTAINER

(51) International classification	:F28D0020020000, F24S0020300000, A47J0036020000, F24S0020200000, C09K0005060000
(31) Priority Document No	:NA
(32) Priority Date	:NA
(33) Name of priority country	:NA
(86) International Application No	:NA
Filing Date	:NA
(87) International Publication No	: NA
(61) Patent of Addition to Application Number	:NA
Filing Date	:NA
(62) Divisional to Application Number	:NA
Filing Date	:NA

(71)**Name of Applicant :**
1)Eswaramoorthy Muthusamy
Address of Applicant :Professor of Mechanical Engineering, Shri Mata Vaishno Devi University, Katra - 182320, J&K #4/19, Palaya Annamalai Palayam, Vilakethy Post, Erode-Dist., Pin code: 638109, Tamilnadu Jammu & Kashmir India
2)Puneet Sharma
(72)**Name of Inventor :**
1)Eswaramoorthy Muthusamy
2)Puneet Sharma

(57) Abstract :
The present invention provides an innovative design of longitudinal dome container for latent heat storage material embedded on outer surface of cooking pot of solar parabolic dish cooker. The stored heat in latent heat storage material in the container assists the heat when solar radiation is not available for cooking through heat transfer fluid. It comprises cylindrical cooking pot made of stainless steel, longitudinal dome container made of stainless steel, latent heat storage materials, and heat transfer fluid. The present innovation offers more efficient, an economical and reliable cooking system. The positioning and integration of longitudinal dome container based latent heat storage materials an excellent combination in thermal design. The present invention helps to an enhancement of heat transfer rate and thermal performance by contact surface area of longitudinal dome container with cooking pot, heat storage for additional time operation of solar cooking when compared to conventional solar cooker.

No. of Pages : 8 No. of Claims : 5

(12) PATENT APPLICATION PUBLICATION
(21) Application No.202117020899 A
(19) INDIA
(22) Date of filing of Application :07/05/2021
(43) Publication Date : 02/07/2021

(54) Title of the invention : THREE-DIMENSIONAL, ADDITIVE MANUFACTURING SYSTEM, AND A METHOD OF MANUFACTURING A THREE-DIMENSIONAL OBJECT

(51) International classification	:B33Y0010000000, B33Y0050020000, B33Y0030000000, G02F0001130000, G06T0019200000	(71)**Name of Applicant :** **1)SAKUU CORPORATION** Address of Applicant :5870 Hellyer Ave., Suite 50 San Jose, CA 95138 U.S.A. (72)**Name of Inventor :** **1)ROGREN, Philip Eugene**
(31) Priority Document No	:62/742505	
(32) Priority Date	:08/10/2018	
(33) Name of priority country	:U.S.A.	
(86) International Application No	:PCT/US2019/055061	
Filing Date	:07/10/2019	
(87) International Publication No	:WO 2020/076734	
(61) Patent of Addition to Application Number	:NA	
Filing Date	:NA	
(62) Divisional to Application Number	:NA	
Filing Date	:NA	

(57) Abstract :
A three-dimensional, additive manufacturing system is disclosed. The first and second printer modules form sequences of first patterned single-layer objects and second patterned singlelayer objects on the first and second carrier substrates, respectively. The patterned single-layer objects are assembled into a three-dimensional object on the assembly plate of the assembly station. A controller controls the sequences and patterns of the patterned single-layer objects formed at the printer modules, and a sequence of assembly of the first patterned single-layer objects and the second patterned single-layer objects into the three-dimensional object on the assembly plate. The first transfer module transfers the first patterned single-layer objects from the first carrier substrate to the assembly apparatus in a first transfer zone and the second transfer module transfers the second patterned single-layer objects from the second carrier substrate to the assembly apparatus in a second transfer zone.

No. of Pages : 36 No. of Claims : 23

(12) PATENT APPLICATION PUBLICATION
(21) Application No.202117024647 A
(19) INDIA
(22) Date of filing of Application :02/06/2021
(43) Publication Date : 02/07/2021

(54) Title of the invention : DISPLAY SYSTEM WITH TIME INTERLEAVING

(51) International classification	:G02B0027010000, G02B0003000000, H04N0013194000, H04N0013359000, G02B0025000000
(31) Priority Document No	:62/886172
(32) Priority Date	:13/08/2019
(33) Name of priority country	:U.S.A.
(86) International Application No	:PCT/US2020/044802
Filing Date	:03/08/2020
(87) International Publication No	:WO 2021/030093
(61) Patent of Addition to Application Number	:NA
Filing Date	:NA
(62) Divisional to Application Number	:NA
Filing Date	:NA

(71)**Name of Applicant :**
1)APPLE INC.
Address of Applicant :One Apple Park Way Cupertino, CA 95014 U.S.A.
(72)**Name of Inventor :**
1)YAN, Jin
2)LI, Xiaokai
3)YANG, Young, Cheol

(57) Abstract :
An electronic device such as a head-mounted device may have a display that produces a display image. The head-mounted device may have an optical system that merges real-world images from real-world objects with display images. The optical system provides the real-world images and display images to an eye box for viewing by a user. The optical system may use time interleaving techniques and/or polarization effects to merge real-world and display images. Switchable devices such as polarization switches and tunable lenses may be controlled in synchronization with frames of display images. Geometrical phase lenses may be used that exhibit different lens powers to different polarizations of light.

No. of Pages : 27 No. of Claims : 21

(12) PATENT APPLICATION PUBLICATION
(21) Application No.202021003327 A
(19) INDIA
(22) Date of filing of Application :24/01/2020
(43) Publication Date : 02/07/2021

(54) Title of the invention : SYSTEM AND METHOD FOR AUTONOMOUS OPERATION OF SOLAR PHOTOVOLTAIC AND AC POWER SOURCE IN HYBRID MICRO-GRID

(51) International classification	:H02J0003380000, H02J0009060000, H02J0007350000, H02M0007440000, F24S0025100000
(31) Priority Document No	:NA
(32) Priority Date	:NA
(33) Name of priority country	:NA
(86) International Application No	:NA
Filing Date	:NA
(87) International Publication No	: NA
(61) Patent of Addition to Application Number	:NA
Filing Date	:NA
(62) Divisional to Application Number	:NA
Filing Date	:NA

(71)**Name of Applicant :**
1)Ingole Vijay Tulshiram
Address of Applicant :104 Ganediwal layout, Camp, Amravati-444602 Maharashtra India
2)Arokar Amit Anantrao
3)Ingole Indira Vijay
(72)**Name of Inventor :**
1)Ingole Vijay Tulshiram
2)Arokar Amit Anantrao
3)Ingole Indira Vijay

(57) Abstract :
The present invention is applicable to solar photovoltaic (SPV) and Diesel Generator (DG) as secondary energy source with an optional battery back-up for a microgrid electric power system generally in the absence of public grid means an islander system. It ensures continuity of power, voltage, and frequency and works as an interruption power supply (UPS). The said secondary DG supplies only additional power to supplement SVP power, as per load demands, else it runs on no-load thereby minimizing overall running cost of energy generation. It is more reliable as DG is protected from damage due to reverse power flow. This is achieved by the novel protection feature without any switchgear. Battery back-up may also be included in the system for further enhancing the efficiency and as an emergency supply when SPV and DG supply may not be available. It generally works with 3 phase supply however, Single phase system is possible. Since the SVP, storage batteries and rectified DG supply are in parallel on DC side synchronization is achieved by inverter from DG supply frequency however, it may also work on battery with stand alone triggering circuit. The system has autonomous power sharing protocol in the sequence of SPV, DG and storage batteries hence more efficient, less complex with minimum firmware. The invention is described by way of example with reference to Figure-1 showing the block schematic of the preferred embodiment and manner in which they are connected of the present invention and figure-2 showing the electronic and circuit schematic of the preferred embodiment and manner in which they are connected of the present invention.

No. of Pages : 15 No. of Claims : 6

(12) PATENT APPLICATION PUBLICATION
(21) Application No.202021020425 A
(19) INDIA
(22) Date of filing of Application :14/05/2020
(43) Publication Date : 02/07/2021

(54) Title of the invention : AI DRIVEN CLOUD HOSPITAL

(51) International classification	:G16H0010600000, G06Q0050220000, G16H0050200000, G16H0010650000, G16H0040200000
(31) Priority Document No	:NA
(32) Priority Date	:NA
(33) Name of priority country	:NA
(86) International Application No	:NA
Filing Date	:NA
(87) International Publication No	: NA
(61) Patent of Addition to Application Number	:NA
Filing Date	:NA
(62) Divisional to Application Number	:NA
Filing Date	:NA

(71)**Name of Applicant :**
1)DR. GUPTA, BHARAT KISHORE
Address of Applicant :34-35, Shubhalaya Villas, Near Rishipuram Phase-1, Barkhera, BHEL, Bhopal, Madhya Pradesh, India Madhya Pradesh India
(72)**Name of Inventor :**
1)DR. GUPTA, BHARAT KISHORE

(57) Abstract :
AI DRIVEN CLOUD HOSPITAL The present invention relates to artificial intelligence driven cloud hospital comprising plurality of technology supported outpatient departments networked around to provide medical assistance to plurality of regionally located patients, wherein an artificial intelligence driven method to provide consultation to patients in the cloud hospital system comprises steps of measuring plurality of health parameter values of an incoming patient, thereby recommending one or more initial drug(s) and/or one or more medical test(s) and/or arranging an online consultation with a doctor, thereafter generating a first prescription; for the results obtained from the medical test(s), suggesting one or more intermediate drug(s) and/or arranging the online consultation of the patient with the doctor and thereupon generating a second prescription and for the outputs obtained from the online consultation, recommending one or more final drug(s) and/or referring the patient to a hospital and thereupon preparing a third prescription. Ref. Figure 1 & 2

No. of Pages : 23 No. of Claims : 10

(12) PATENT APPLICATION PUBLICATION
(21) Application No.202021022914 A
(19) INDIA
(22) Date of filing of Application :01/06/2020
(43) Publication Date : 02/07/2021

(54) Title of the invention : FORMS OF SODIUM NITRITE AND IMPURITY PROFILE THEREOF

(51) International classification	:H01L0027082000, D06F0039140000, H01L0021823400, A61K0031415000, H01L0021265000
(31) Priority Document No	:NA
(32) Priority Date	:NA
(33) Name of priority country	:NA
(86) International Application No	:NA
Filing Date	:NA
(87) International Publication No	: NA
(61) Patent of Addition to Application Number	:NA
Filing Date	:NA
(62) Divisional to Application Number	:NA
Filing Date	:NA

(71)**Name of Applicant :**
1)Deepak Nitrite Limited
Address of Applicant :Register & Corporate Office, Aditya-1, Chhani Road, Vadodara-390024. Gujarat, India Gujarat India
(72)**Name of Inventor :**
1)A S Sarma

(57) Abstract :
ABSTRACT FORMS OF SODIUM NITRITE AND IMPURITY PROFILE THEREOF A present disclosure describes about an improved form of purified crystalline sodium nitrite. The said form of sodium nitrite may comprise a purity level between 99% to 99.2%. The form of sodium nitrite may also comprise an amount of sodium nitrate no greater than 0.7%. The present disclosure also relates to a method of obtaining an improved form of purified crystalline sodium nitrite with minimum impurities.

No. of Pages : 27 No. of Claims : 17

(12) PATENT APPLICATION PUBLICATION
(19) INDIA
(22) Date of filing of Application :15/07/2020
(21) Application No.202021030236 A
(43) Publication Date : 02/07/2021

(54) Title of the invention : SYSTEM AND METHOD FOR RECOVERING LIQUID SUGAR FROM MIXED JUICE SLURRY

(51) International classification	:D21F0009000000, B01D0033040000, C13B0010040000, F26B0017020000, C13B0020000000
(31) Priority Document No	:NA
(32) Priority Date	:NA
(33) Name of priority country	:NA
(86) International Application No	:NA
Filing Date	:NA
(87) International Publication No	: NA
(61) Patent of Addition to Application Number	:NA
Filing Date	:NA
(62) Divisional to Application Number	:NA
Filing Date	:NA

(71)**Name of Applicant :**
1)Suresh Sitaram Joshi
Address of Applicant :Flat No. F-2 704, Shivsagar Platinum, Anandnagar, Suncity Road, Wadgaon Budruk, Pune-411051, Maharashtra ,India. Maharashtra India
(72)**Name of Inventor :**
1)Suresh Sitaram Joshi

(57) Abstract :
System (100) and method for recovering liquid sugar from mixed juice slurry is described that in a single stage extracts bagasse from mixed juice slurry and processes to bagasse to recover liquid sugar and remove moisture from bagasse for being used as fuel. The system (100) includes a horizontal vacuum belt filter system (10) to filter liquid sugar and progress bagasse from mixed juice slurry, a combing and ploughing unit (20), a harrowing and flattening unit (30), a washing unit, at least one first dewatering unit (40) and a second dewatering unit (50). The combing and ploughing unit (20)combs and ploughs bagasse. The harrowing and flattering unit (30) harrows and flattens bagasse which is washed by the washing unit and dewatered in the first dewatering unit (40) and the second dewatering unit (50). (To be published with Figure 1)

No. of Pages : 21 No. of Claims : 10

(12) PATENT APPLICATION PUBLICATION
(21) Application No.202021037190 A
(19) INDIA
(22) Date of filing of Application :28/08/2020
(43) Publication Date : 02/07/2021

(54) Title of the invention : AN APPARATUS FOR FACILITATING SELF-ADMINISTRATION OF EYE DROPS

(51) International classification	:A61F0009000000, G09B0019000000, B43K0023000000, B65D0025200000, B65D0081360000	(71)**Name of Applicant :** **1)Mayan Rahul Agrawal** Address of Applicant :Agrawal Complex, 729, Loha Oli, Itwari, Nagpur-440002, Maharashtra, India Maharashtra India (72)**Name of Inventor :** **1)Mayan Rahul Agarwal**
(31) Priority Document No	:NA	
(32) Priority Date	:NA	
(33) Name of priority country	:NA	
(86) International Application No	:NA	
Filing Date	:NA	
(87) International Publication No	: NA	
(61) Patent of Addition to Application Number	:NA	
Filing Date	:NA	
(62) Divisional to Application Number	:NA	
Filing Date	:NA	

(57) Abstract :
ABSTRACT AN APPARATUS FOR FACILITATING SELF-ADMINISTRATION OF EYE DROPS The present disclosure envisages an apparatus (100) for facilitating self-administration of eye drops into an eye (112) of a user. The apparatus (100) comprises a gripper (102), a mirror holder (106), and a connector bracket (106). The gripper (102) is configured to grasp the neck portion of an eye drop bottle (114). The mirror holder (106) has a mirror (108). The connector bracket (110) is defined by a first end (110A) and a second end (110B). The first end (110A) and the second end (110B) is configured to be attached to the gripper (102) and the holder (106) respectively to form detachable attachment to configure the apparatus (100) in an operative configuration to facilitate self-administration of eye drops in the eye (112) of the user.

No. of Pages : 34 No. of Claims : 10

(12) PATENT APPLICATION PUBLICATION
(19) INDIA
(22) Date of filing of Application :17/10/2020

(21) Application No.202021045245 A
(43) Publication Date : 02/07/2021

(54) Title of the invention : LOAD & TIME BASED ERGONOMIC EVALUATION SYSTEM

(51) International classification	:G06Q0010060000, A61B0005103000, A61B0005110000, B65G0007120000, A61H0001000000
(31) Priority Document No	:NA
(32) Priority Date	:NA
(33) Name of priority country	:NA
(86) International Application No	:NA
Filing Date	:NA
(87) International Publication No	: NA
(61) Patent of Addition to Application Number	:NA
Filing Date	:NA
(62) Divisional to Application Number	:NA
Filing Date	:NA

(71)**Name of Applicant :**
1)Amit Waman Bankar
Address of Applicant :JD College of engineering and management, khandala, Post-valini, Near Hanuman Temple Kalmeshwar Road, Nagpur, Maharashtra India
2)Bhushan Ratnakar Mahajan
(72)**Name of Inventor :**
1)Amit Waman Bankar
2)Bhushan Ratnakar Mahajan

(57) Abstract :
Manual handling occurs in almost all working environments, though workers in construction, agriculture, hotels and restaurants are most likely to be expose to heavy working loads in terms of weight, postures, method or the procedure. Manual handling of loads may cause cumulative disorders due to gradual and cumulative deterioration of the musculoskeletal system through continuous lifting / handling activities, e.g. low back pain. It can also cause acute trauma such as cuts or fractures due to accidents. Work-related low back pain and injuries are the most common musculoskeletal disorders caused by manual handling. Proposed inventions is design and development of body load carrying capacity and feasibility in defined posture analysis tool. It would be human artificial human skeleton structure with special electronics component to mimic the human posture for particular task and detecting load impact over the given time and this electronics and computer based data analytics system deployment will assist the process of manual material handling assessment feasibility.

No. of Pages : 20 No. of Claims : 3

(12) PATENT APPLICATION PUBLICATION
(21) Application No.202021050710 A
(19) INDIA
(22) Date of filing of Application :21/11/2020
(43) Publication Date : 02/07/2021

(54) Title of the invention : HANDHELD DEVICE MOUNTABLE CHARGER

(51) International classification	:H02J0007000000, A45C0011000000, H04W0004029000, G01J0003020000, H02J0005000000	(71)**Name of Applicant :** **1)Prabodh Hanumant Gadagkar** Address of Applicant :B-501, RADHIKA CO-OPERATIVE HOUSING, SOCIETY, PARVATINAGAR, SINHGAD ROAD, PUNE 411030, MAHARASHTRA, INDIA Maharashtra India
(31) Priority Document No	:NA	(72)**Name of Inventor :**
(32) Priority Date	:NA	**1)Prabodh Hanumant Gadagkar**
(33) Name of priority country	:NA	
(86) International Application No	:NA	
Filing Date	:NA	
(87) International Publication No	: NA	
(61) Patent of Addition to Application Number	:NA	
Filing Date	:NA	
(62) Divisional to Application Number	:NA	
Filing Date	:NA	

(57) Abstract :
Disclosed is a handheld device mountable charger for charging handheld devices. The charger has a plug fixedly attached over the top surface for receiving the handheld device. Alternatively, the charger has a USB port affixed to the front end for charging the handheld device through USB cable. There is an air slit positioned below the charging plug that provides air ventilation between the plug and the body of the charger. The charger has a first pair of projection to support the handheld device from front side. Similarly, the charger has a second pair of projection that supports the hand held device from back side. FIG.1 (For Publication)

No. of Pages : 22 No. of Claims : 10

(12) PATENT APPLICATION PUBLICATION
(19) INDIA
(22) Date of filing of Application :30/01/2021
(21) Application No.202121004171 A
(43) Publication Date : 02/07/2021

(54) Title of the invention : A METHOD OF FORMING A CONTAINER

(51) International classification	:B65D0001020000, H01M0002020000, B29C0065000000, B29B0011140000, B29C0045170000
(31) Priority Document No	:NA
(32) Priority Date	:NA
(33) Name of priority country	:NA
(86) International Application No	:NA
Filing Date	:NA
(87) International Publication No	: NA
(61) Patent of Addition to Application Number	:NA
Filing Date	:NA
(62) Divisional to Application Number	:NA
Filing Date	:NA

(71)**Name of Applicant :**
1)Creative Propack Ltd.
Address of Applicant :501, 5th Floor, Embassy Centre, Nariman Point, Mumbai-400021, Maharashtra, India Maharashtra India
(72)**Name of Inventor :**
1)AGARWAL, Ritesh

(57) Abstract :
A method of producing containers with at least one enhanced property, such as high strength, sturdy, durable, and recyclable are described herein. The container so formed have ribs / patterns at the inner surface, leaving the entire outer surface for decorative or marketing purposes. The ribs / pattern is selected from linear lines, curved lines, honeycombs, hexagons, square, rectangular, circular and combination thereof. The containers so formed may have reduced amount of materials used.

No. of Pages : 22 No. of Claims : 19

(12) PATENT APPLICATION PUBLICATION
(21) Application No.202121004484 A
(19) INDIA
(22) Date of filing of Application :02/02/2021
(43) Publication Date : 02/07/2021

(54) Title of the invention : PROCESS TO DETERMINE PARTS PER BILLION LEVELS OF AMMONIA IN WATER WITH EMPHASIS ON BOILER COOLANT WATER

(51) International classification	:H04L0012741000, H04W0036140000, G01N0021780000, B41J0029380000, C08F0002180000
(31) Priority Document No	:NA
(32) Priority Date	:NA
(33) Name of priority country	:NA
(86) International Application No	:NA
Filing Date	:NA
(87) International Publication No	: NA
(61) Patent of Addition to Application Number	:NA
Filing Date	:NA
(62) Divisional to Application Number	:NA
Filing Date	:NA

(71)**Name of Applicant :**
1)SECRETARY, DEPARTMENT OF ATOMIC ENERGY
Address of Applicant :Anushakti Bhavan, Chhatrapati Shivaji Maharaj Marg, Mumbai - 400 001, Maharashtra, India Maharashtra India

(72)**Name of Inventor :**
1)Dr. N. N. Meeravali
2)Smt. K. Madhavi
3)Dr. Sunil Jai Kumar

(57) Abstract :
ABSTRACT PROCESS TO DETERMINE PARTS PER BILLION LEVELS OF AMMONIA IN WATER WITH EMPHASIS ON BOILER COOLANT WATER This invention discloses a process to detect ammonia in boiler coolant water using a spectrophotometer or a colour chart. The method works in the range of 10-500 ppb ammonia present in boiler coolant waters. This method is also applicable to river water, drinking water, groundwater and aquarium water. The process results in the formation of a stable and sensitive hydrophilic mixed indo-salicylate-Aliquat-336 ion-associate within or between nano-environment of Aliquat-336 nano-aggregates in alkali solution. The intensity of the green colored hydrophilic mixed indo-salicylate-Aliquat-336 ion-associate in aqueous solution is determined quantitatively using spectrophotometer at 660 nm in laboratory. In the process, kinetics is improved, besides this the reaction can be carried out in normal room environment such as at 25oC and day light conditions. The limit of detection obtained by this developed process followed by spectrophotometric determination is 0.5 ppb.

No. of Pages : 28 No. of Claims : 10

(12) PATENT APPLICATION PUBLICATION
(21) Application No.202121006726 A
(19) INDIA
(22) Date of filing of Application :18/02/2021
(43) Publication Date : 02/07/2021

(54) Title of the invention : SYSTEM AND METHOD FOR PROVIDING POWER SUPPLY TO AN ELECTRIC VEHICLE WITH A STREETLAMP CONNECTION

(51) International classification	:B60L0053600000, B60L0053660000, G06F0001260000, B60L0058100000, B60L0008000000	(71)**Name of Applicant :** **1)MAGENTA EV SOLUTIONS PRIVATE LIMITED** Address of Applicant :102, ALPHA GARDENS, PLOT 26, SECTOR 14, KOPARKHAIRANE, NAVI MUMBAI, MAHARASHTRA Maharashtra India
(31) Priority Document No	:NA	(72)**Name of Inventor :**
(32) Priority Date	:NA	**1)Darryl Dias**
(33) Name of priority country	:NA	**2)Maxson Lewis**
(86) International Application No	:NA	
Filing Date	:NA	
(87) International Publication No	: NA	
(61) Patent of Addition to Application Number	:NA	
Filing Date	:NA	
(62) Divisional to Application Number	:NA	
Filing Date	:NA	

(57) Abstract :
The embodiments herein relates to a system 100 and method for providing power supply to an electric vehicle 114 by obtaining power information from the electric vehicle 114. The system 100 includes an input connector 102 that receives an input power, a pilot signal generator 108, and a processing unit 106. The processing unit 106 activates (i) the pilot signal generator 108 to generate and communicate signals with the electric vehicle 114 through an output connector 112 to obtain the power information of the electric vehicle 114 and (ii) a power switching module 110 to switch the input power from the input connector 102 to the output connector 112 with the output power based on the power information of the electric vehicle 114. The processing unit 106 supplies the output power for charging the electric vehicle 114 through the output connector 112. FIG. 1

No. of Pages : 27 No. of Claims : 10

(12) PATENT APPLICATION PUBLICATION
(19) INDIA
(22) Date of filing of Application :16/03/2021

(21) Application No.202121011175 A
(43) Publication Date : 02/07/2021

(54) Title of the invention : RNA ELUTION ACTIVE SYSTEM USING DENDRITIC FIBROUS NANOSILICA (DFNS)

(51) International classification	:C12N0015100000, G01N0015080000, B05B0011000000, B01J0020286000, B01D0015380000
(31) Priority Document No	:NA
(32) Priority Date	:NA
(33) Name of priority country	:NA
(86) International Application No	:NA
Filing Date	:NA
(87) International Publication No	: NA
(61) Patent of Addition to Application Number	:NA
Filing Date	:NA
(62) Divisional to Application Number	:NA
Filing Date	:NA

(71)**Name of Applicant :**
1)TATA INSTITUTE OF FUNDAMENTAL RESEARCH
Address of Applicant :Tata Institute of Fundamental Research (TIFR) Homi Bhabha Road, Navy Nagar, Colaba, Mumbai Maharashtra India 400 005 Maharashtra India
(72)**Name of Inventor :**
1)VIVEK POLSHETTIWAR
2)ULLAS KOLTHUR-SEETHARAM
3)AYAN MAITY
4)U. S. SANDRA

(57) Abstract :
Title of the invention: RNA ELUTION ACTIVE SYSTEM USING DENDRITIC FIBROUS NANOSILICA (DFNS) RNA elution active system for RNA extraction from cells comprising Dendritic Fibrous Nanosilica of particle sizes50-600 nm), surface area (400-1200 m2/g) ; pore size 4.5 to 25 nm and pore volume 0.7 to 1.5, buffer and washing solution has significant and co-acting RNA binding and elution capability. The said system achieves RNA extraction more than double as compared to silica gels and eight times more efficient than similar-sized Stber silica solid spheres in coaction with said wide variety of buffer and washing solutions.

No. of Pages : 25 No. of Claims : 10

(12) PATENT APPLICATION PUBLICATION
(19) INDIA
(22) Date of filing of Application :23/03/2021

(21) Application No.202121012478 A
(43) Publication Date : 02/07/2021

(54) Title of the invention : BIOFUEL COMPOSITION AND METHOD FOR PREPARATION THEREOF

(51) International classification	:C10L0001020000, C10L0001190000, C10L0001180000, C12P0007640000, C10L0001185000
(31) Priority Document No	:NA
(32) Priority Date	:NA
(33) Name of priority country	:NA
(86) International Application No	:NA
Filing Date	:NA
(87) International Publication No	: NA
(61) Patent of Addition to Application Number	:NA
Filing Date	:NA
(62) Divisional to Application Number	:NA
Filing Date	:NA

(71)**Name of Applicant :**
1)Dr. Babasaheb Ambedkar Technological University, TEQIP-III, Lonere, Tal: Mangaon, District: Raigad Maharashtra, Pin Code: 402103
Address of Applicant :Dr. Babasaheb Ambedkar Technological University, TEQIP-III, Lonere, Tal: Mangaon, District: Raigad Maharashtra, Pin Code: 402103, India. Maharashtra India
2)Dr. V. G. Sargade
3)Shivasheesh Kaushik
(72)**Name of Inventor :**
1)Shivasheesh Kaushik
2)Dr. V. G. Sargade
3)Dr. Satyendra Singh
4)Dr. Anirudh Gupta
5)Shailesh Ranjan Kumar
6)Kuldeep Rawat
7)Dr. Sujeet Kumar
8)Nikhil Kanojia
9)Dr. Kuldeep Panwar
10)Vinay Sati
11)Amit Kumar
12)Rakshit Naudiyal

(57) Abstract :
A biofuel composition comprises of methyl esters of vegetable oils in the range of 2.5%w/w-12.5%w/w, and diesel fuel in the range of 50%w/w-90%w/w. A method of preparation of the biofuel composition comprises of the following steps, reacting oils of the jatropha curcus, castor, pongomia, sesame with methanol in the presence of a catalyst by a transestrification reaction to obtain methyl esters of the oils, heating the esters to obtain moisture free oils, stirring the moisture free oils followed by allowing the stirred solution to stand overnight at a constant temperature to obtain a mixture of layers, filtering the layers to obtain a crude biofuel followed by washing to obtain a clear biofuel, heating the clear biofuel at a temperature in the range of 80 -90 to remove dissolved moisture from the biofuel, and blending the biofuel with a commercial grade diesel to obtain a blend of biofuel composition. Ref. fig. 1

No. of Pages : 21 No. of Claims : 8

(12) PATENT APPLICATION PUBLICATION
(21) Application No.202121018154 A
(19) INDIA
(22) Date of filing of Application :20/04/2021
(43) Publication Date : 02/07/2021

(54) Title of the invention : ADAPTIVE LEARNING DEVICE FOR CHILDREN

(51) International classification	:G09B0005060000, G06F0003120000, G06F0003042000, G09B0019000000, A63F0011000000	(71)**Name of Applicant :** **1)Dr. Deepak Motwani** Address of Applicant :S-24 Mandakini Colony, Kolar Road, Bhopal 462042, India. Madhya Pradesh India **2)Ronald Fernandez** **3)Ayush Dubey** **4)Krati Jain**
(31) Priority Document No	:NA	
(32) Priority Date	:NA	
(33) Name of priority country	:NA	
(86) International Application No	:NA	
Filing Date	:NA	
(87) International Publication No	: NA	
(61) Patent of Addition to Application Number	:NA	
Filing Date	:NA	
(62) Divisional to Application Number	:NA	
Filing Date	:NA	

(72)**Name of Inventor :**
1)Dr. Deepak Motwani
2)Ronald Fernandez
3)Ayush Dubey
4)Krati Jain

(57) Abstract :
An adaptive learning device for children, comprising a frame 1 installed with an artificial intelligence (AI) 3 enabled image capturing module for capturing multiple images of users and allocates corresponding profiles to users based on the captured images, multiple primary set of pneumatically actuated blocks 4 undergoes protrusion/retraction to form various alphabetic characters/designs, wherein a microcontroller linked to blocks 4 generates a command upon detection of the protruded characters/designs, a set of motorized omnidirectional wheels affixed with a hand support 5 arranged adjacent to blocks moves user™s hands in accordance to the detected character/designs for performing overwriting over character/design, multiple secondary pneumatically actuated blocks 7 protrudes to portray same character/design as learnt by the user and a touch responsive panel 9 is utilized by the user to inscribe the character/design, wherein the module 3 analyses inscribed character/design with the portrayed character/design for evaluating any mistakes performed by the user. Ref Figure 1 and 2

No. of Pages : 16 No. of Claims : 8

(12) PATENT APPLICATION PUBLICATION
(21) Application No.202121019254 A
(19) INDIA
(22) Date of filing of Application :27/04/2021
(43) Publication Date : 02/07/2021

(54) Title of the invention : PRAMS FOR SCHEDULING IN REAL-TIME OPERATING SYSTEM USING LITMUSRT

(51) International classification	:G06F0009480000, H04W0072120000, B62B0007080000, B60L0015200000, B62B0005080000	(71)**Name of Applicant :** **1)JAYNA DONGA** Address of Applicant :7, SHRINATH KRUPA, YAMUNA PARK SOCIETY, VALLABH VIDYANAGAR ROAD, ANAND, GUJARAT - 388001, INDIA. Gujarat India
(31) Priority Document No	:NA	**2)DR. MEHFUZA S. HOLIA**
(32) Priority Date	:NA	**3)DR. VATSAL H. SHAH**
(33) Name of priority country	:NA	(72)**Name of Inventor :**
(86) International Application No	:NA	**1)JAYNA DONGA**
Filing Date	:NA	**2)DR. MEHFUZA S. HOLIA**
(87) International Publication No	: NA	**3)DR. VATSAL H. SHAH**
(61) Patent of Addition to Application Number	:NA	
Filing Date	:NA	
(62) Divisional to Application Number	:NA	
Filing Date	:NA	

(57) Abstract :
ABSTRACT Title: - PrAMS for Scheduling in Real-Time operating system The scheduling algorithms have been analysed and worked upon broadly, but there is less attention given to the multiprocessor architecture and real-time operating system as well. Most of the algorithms are applicable for the general-purpose operating system and do not fulfill the necessities of real-time systems as the real-time system is closely concerned about timing-constraints. Now a days numerous real-time OS like QNX, VxWorks, LynxOS and real-time extension of Linux practicing the processor affinity concept to schedule the real-time tasks and it offers more flexible approach instead of traditional approaches defined in the literature. Limiting the migration may reduce the context switch overhead and improve the cache performance but it largely influence on other parameters which are most important for the any real-time operating system. It degrades overall performance by decreasing the schedulability of tasks, increase the deadline miss ratio. PrAMS is a novel processor affinity based algorithm to enhance the schedulability of the tasks and decreases the average deadline miss ratio with hard pre-emption migration policy by providing the flexible migration policy.

No. of Pages : 14 No. of Claims : 4

(12) PATENT APPLICATION PUBLICATION
(21) Application No.202121019787 A
(19) INDIA
(22) Date of filing of Application :29/04/2021
(43) Publication Date : 02/07/2021

(54) Title of the invention : A SET OF BRACKETS FOR FOLDING A BICYCLE

(51) International classification	:B62K0015000000, B60T0007060000, B60R0021090000, F16B0012100000, B62M0006900000	(71)**Name of Applicant :** **1)Mayban Mobility Innovations (OPC) Pvt. Ltd.** Address of Applicant :3 / 104, Kayastha, Durgesh Park, Kalher,, G B Road, Thane W,, THANE, Thane- 400601, Maharashtra, India Maharashtra India
(31) Priority Document No	:NA	(72)**Name of Inventor :**
(32) Priority Date	:NA	**1)Patil Mandar Dilip**
(33) Name of priority country	:NA	
(86) International Application No	:NA	
Filing Date	:NA	
(87) International Publication No	: NA	
(61) Patent of Addition to Application Number	:NA	
Filing Date	:NA	
(62) Divisional to Application Number	:NA	
Filing Date	:NA	

(57) Abstract :
A SET OF BRACKETS FOR FOLDING A BICYCLE A set of brackets for folding a bicycle frame consisting at least one frame bracket and a pedal bracket is disclosed. The frame bracket is for folding a bicycle main frame. It can be implemented at a handle and at lower portion of the main frame. The bracket has two plates (1) and (2) rotatably interlocked by a hinge (5) forming L shape structure, duel locking arrangement and unlocking knob. The bracket can fold the main frame in two halves. The pedal bracket comprises male (2) and a female connecting part (1), wherein the male connecting part (2) and the female connecting part (1) are connected together by a hinge (3) and have an offset arrangement to restrict the movement in one direction. <>

No. of Pages : 15 No. of Claims : 5

(12) PATENT APPLICATION PUBLICATION
(21) Application No.202121021197 A
(19) INDIA
(22) Date of filing of Application :11/05/2021
(43) Publication Date : 02/07/2021

(54) Title of the invention : ADVANCED ELECTRONIC JACQUARD MACHINE FOR TEXTILE WEAVING LOOM AND METHOD THEREOF.

(51) International classification	:D03C0003200000, D03C0003320000, D03C0003360000, D03C0003260000, D03C0003000000	(71)**Name of Applicant :** **1)ARMY LOOMS AND TEXTILE COMPANY** Address of Applicant :PLOT NO-12,ARIHANT IND. ESTATE, NEAR GUPTA MILL,NH-8, PIPODARA, SURAT, GUJARAT,INDIA, PIN CODE: 394100 Gujarat India
(31) Priority Document No	:NA	(72)**Name of Inventor :**
(32) Priority Date	:NA	**1)ASHOKBHAI POPATBHAI RADADIYA**
(33) Name of priority country	:NA	**2)PRAFULBHAI HARESHBHAI RADADIYA**
(86) International Application No	:NA	
Filing Date	:NA	
(87) International Publication No	: NA	
(61) Patent of Addition to Application Number	:NA	
Filing Date	:NA	
(62) Divisional to Application Number	:NA	
Filing Date	:NA	

(57) Abstract :
Title: Advanced Electronic Jacquard Machine for Textile Weaving Loom and Method Thereof Abstract Invention is related to advanced electronic jacquard machine for textile weaving loom and method thereof, wherein technical advancements are invented in the various parts of jacquard machine such as main shaft drive mechanism, eccentric cam and wheel mechanism, swinging arm mechanism, pull rod assembly, knife lifting mechanism, electronic harness selection device (electronic module) mounting system, leno thread lifting mechanism and machine setting & calibration system. The technical advancement of present invention enhances the performance of the machine by reducing the noise, lowering the maintenance, lowering the breakdowns, decreasing the design miss, easy maintenance and easy resetting & calibration. The present invention is simple, cost effective, efficient and durable in comparison with the technique available in the prior art.

No. of Pages : 44 No. of Claims : 14

(12) PATENT APPLICATION PUBLICATION
(21) Application No.202121021761 A
(19) INDIA
(22) Date of filing of Application :14/05/2021
(43) Publication Date : 02/07/2021

(54) Title of the invention : INTELLIGENT MULTIPLE REGRESSION ANALYSIS IN AGRICULTURE: CROP PRODUCTIVITY, RAINFALL, FERTILITY, HUMIDITY, TEMPERATURE USING MACHINE LEARNING.

(51) International classification	:G06N0003080000, G06N0020000000, G06Q0010040000, G06Q0050020000, C12N0015820000
(31) Priority Document No	:NA
(32) Priority Date	:NA
(33) Name of priority country	:NA
(86) International Application No	:NA
Filing Date	:NA
(87) International Publication No	: NA
(61) Patent of Addition to Application Number	:NA
Filing Date	:NA
(62) Divisional to Application Number	:NA
Filing Date	:NA

(71)**Name of Applicant :**
1)Deepak Sitaram Sonawane
Address of Applicant :Vidya Pratishthan's Kamalnayan Bajaj Institute of Engineering and Technology, Baramati-413133, Dist Pune, Maharashtra, India. E-mail: deepak.sonawane@vpkbiet.org, Mobile: +919552636700 Maharashtra India
2)Dr. Ashok Yeshwantrao Tayade
3)Mr. Devdatta Kashinath Mokashi
4)Sagar Parashuram Dhamone
5)Dr. Nilesh Mahajan
6)Mrs. Sangeeta Patil
7)Lalita Kiran Wani
8)Anuradha Jape
9)Dr. Yogita Vishal Bhapkar
10)Jyoti Atul Dhanke
11)Suvarna Ranjeet Jagtap

(72)**Name of Inventor :**
1)Deepak Sitaram Sonawane
2)Dr. Ashok Yeshwantrao Tayade
3)Mr. Devdatta Kashinath Mokashi
4)Sagar Parashuram Dhamone
5)Dr. Nilesh Mahajan
6)Mrs. Sangeeta Patil
7)Lalita Kiran Wani
8)Anuradha Jape
9)Dr. Yogita Vishal Bhapkar
10)Jyoti Atul Dhanke
11)Suvarna Ranjeet Jagtap

(57) Abstract :
Abstract Our Invention Intelligent Multiple Regression Analysis in Agriculture: Crop Productivity, Rainfall, Fertility, Humidity, Temperature Using Machine Learning is a Machine learning support tool for crop yield prediction, including supporting decisions on what crops to grow and what to do during the growing season of the crops. The invented methods and process combined analysis of variance was done from the mean data obtained for each characteristic over two seasons and correlation and regression analysis were carried out to better understand the relationship between yield and some yield components. The Results indicated that seasons significantly affected all traits and interaction between seasons and cultivars was also significant and also Highly significant differences and adequate genetic variability were observed among cultivars for all the eight characters. The invented results also of the correlation coefficients of traits with grain yield revealed that the grain number per spike (r=0.84), grain weight/spike (0.87), 1000-grain weight (r=0.88), number of spikes per square meter (r=0.68) and spike length (r=0.67) had the highest significant positive correlation with grain yield, indicating dependency of these characters on each other. The Best Subset Multiple Regression analysis indicates that adding the variable number of grain per spike (X4) and grain weight per spike (X5) does not improve the fit of the model. The invented technology is a Crop yield may be assessed and predicted using a piecewise linear regression method with break point and various weather and agricultural parameters, such as NDVI, surface parameters (soil moisture and surface temperature) and rainfall data and the parameters may help aid in estimating and predicting crop conditions

No. of Pages : 19 No. of Claims : 7

(12) PATENT APPLICATION PUBLICATION
(19) INDIA
(22) Date of filing of Application :16/05/2021
(21) Application No.202121021975 A
(43) Publication Date : 02/07/2021

(54) Title of the invention : INTELLIGENT TOOTH PASTE DISPENSER.

(51) International classification	:B65D0035280000, A61Q0011000000, A46B0011000000, A47K0005180000, A47K0005122000
(31) Priority Document No	:NA
(32) Priority Date	:NA
(33) Name of priority country	:NA
(86) International Application No	:NA
Filing Date	:NA
(87) International Publication No	: NA
(61) Patent of Addition to Application Number	:NA
Filing Date	:NA
(62) Divisional to Application Number	:NA
Filing Date	:NA

(71)**Name of Applicant :**
1)Dr. Deepak Macchindra Vikhe
Address of Applicant :Reader, Dept of Prosthodontics, Rural Dental College & Hospital, Pravara Institute of Medical Sciences (DU), Pravara Medical Trust, A/P- Loni (bk), Tal- Rahata, Dist- Ahmednagar 413736, Maharashtra, India. E-mail: drdeepak_mvikhe@yahoo.com Maharashtra India

(72)**Name of Inventor :**
1)Dr. Deepak Macchindra Vikhe
2)Dr. Pallavi Madanshetty
3)Dr. Milind Dilip Jagdale
4)Bhavin Milind Patil
5)Sagar Sanjay Kadadhekar
6)Bhakti Shrikishan Porwal
7)Riddhi Vijay Malunjkar
8)Satyam Laxmikant Lahoti
9)Ayusha Ashok Shirodkar
10)Bhagyashree Atul Tayade
11)Siddhi Mukesh Baheti
12)Dr. Prasad Nanasaheb Mhaske

(57) Abstract :
Intelligent tooth Paste Dispenser. Abstract Our Invention Intelligent Tooth Paste Dispenser is a squeeze toothpaste from the tube, they tend to overdose on toothpaste and experience difficulty getting the las and the rational use of fluoride toothpaste, a child should use a pea size (0.254 grams) of toothpaste, an adult should use about 0.54 grams and Old should use about 0.64 grams of toothpaste each time for the best effect. The invention is a people cover the entire brush with toothpaste for each use, which results in using approx 1.53 grams of toothpaste largely exceeding the optimum amount and also in addition, when most of the toothpaste in the tube is used, users may need to roll the tube up or use a toothpaste squeezer to get the rest out. The invention designs an electric toothpaste dispenser, which can accurately control the amount of toothpaste dispensed each time and prevent toothpaste overdosing and also with a peristaltic pump installed, the dispenser effectively gets the toothpaste out of the tube and reduce the wasted toothpaste.

No. of Pages : 13 No. of Claims : 6

(12) PATENT APPLICATION PUBLICATION
(21) Application No.202121021976 A
(19) INDIA
(22) Date of filing of Application :16/05/2021
(43) Publication Date : 02/07/2021

(54) Title of the invention : ULTRACAPACITOR DRIVEN ELECTRICAL VEHICLE WITH PROPOSED REGENERATIVE BRAKING AND FIELD WEAKENING CONTROL ALGORITHM OF INDUCTION MOTOR.

(51) International classification	:H02P0021000000, B60T0001100000, B60L0015200000, B60W0030180000, B60L0058120000
(31) Priority Document No	:NA
(32) Priority Date	:NA
(33) Name of priority country	:NA
(86) International Application No	:NA
Filing Date	:NA
(87) International Publication No	: NA
(61) Patent of Addition to Application Number	:NA
Filing Date	:NA
(62) Divisional to Application Number	:NA
Filing Date	:NA

(71)**Name of Applicant :**
1)Athul Vijay P K (PhD Scholar)
Address of Applicant :PhD Scholar, Sardar Vallabhbhai National Institute of Technology, Surat-395007, India. (R)Devaprayag (H), Moozhikkal, Viruppil, P.O Chelavoor, Calicut, Kerala-673571, India. E-Mail: athulvijaydeva@gmail.com Gujarat India
2)Dr. Varsha A Shah. (Professor)
3)Ujjval B Vyas (PhD Scholar)
(72)**Name of Inventor :**
1)Athul Vijay P K (PhD Scholar)
2)Dr. Varsha A Shah. (Professor)
3)Ujjval B Vyas (PhD Scholar)

(57) Abstract :
ABSTRACT Our Invention Ultracapacitor Driven Electrical Vehicle with Proposed Regenerative Braking and Field Weakening Control Algorithm of IM is a ultracapacitor is a prominent energy storage system for electrical vehicles (EV). The lesser running range issue of the ultracapacitor driven EV can be overcome with the aid of regenerative braking, because of the high charge-discharge cycle of the ultracapacitor. The work controls the functioning of the EV under different dynamic conditions using Indirect Vector Control and Space Vector Pulse Width Modulation (SVPWM) with ultracapacitor as a primary source in the constant torque as well as field weakening (FW) of the IM. During deceleration and braking, the energy stored in the rotating part of the EV is successfully fed back to the ultracapacitor with the aid of regenerative braking. The work has been carried out in two enactments first developed an efficient regenerative braking algorithm in the constant torque region as well as FW region. Second work has been carried out to develop an efficient control algorithm for the effective reduction in the torque ripple in comparison with the conventional SVPWM based control in the FW region of the IM. The inventions also include a ultracapacitor pack as the energy storage unit, a novel type of advanced regenerative braking system for electric vehicle driven by in multi wheel motors is presented and a braking energy regeneration unique control strategy is set up. The invented results of simulation show that the novel type of system can ensure the safety of ultracapacitor pack and significantly improve the rate of energy regeneration.

No. of Pages : 28 No. of Claims : 8

(12) PATENT APPLICATION PUBLICATION
(21) Application No.202121022469 A
(19) INDIA
(22) Date of filing of Application :19/05/2021
(43) Publication Date : 02/07/2021

(54) Title of the invention : A DEVICE FOR GENERATING OXYGEN FOR HOMES

(51) International classification	:C10K0001000000, C01B0013020000, F22B0001280000, C12M0001000000, G01N0001440000
(31) Priority Document No	:NA
(32) Priority Date	:NA
(33) Name of priority country	:NA
(86) International Application No	:NA
Filing Date	:NA
(87) International Publication No	: NA
(61) Patent of Addition to Application Number	:NA
Filing Date	:NA
(62) Divisional to Application Number	:NA
Filing Date	:NA

(71)**Name of Applicant :**
1)Dr Fanny Sharadkumar Desai
Address of Applicant :Himalaya Cancer Hospital and research Institute, 4 Vinod Baug, Jetalpur Bridge, Alkapuri, Vadodara, Gujarat-390007 Gujarat India
(72)**Name of Inventor :**
1)Dr Fanny Sharadkumar Desai
2)N. Prithvi Singh

(57) Abstract :
ABSTRACT A DEVICE FOR GENERATING OXYGEN FOR HOMES The present invention provides a device (1) for generating oxygen comprises an inner chamber (20) adapted to perform chemical reactions, an outer chamber (30) adapted to isolate the inner chamber, sealed vacuum between two chambers for heat insulation and a lid (40) to cover the outer chamber (30). The tube comprises two outlets, a first outlet that connects with oxygen cannula with or without oxygen regulator and a second outlet with the safety valve to avoid explosion hazards. Fig. 1

No. of Pages : 24 No. of Claims : 10

(12) PATENT APPLICATION PUBLICATION
(21) Application No.202121022493 A
(19) INDIA
(22) Date of filing of Application :20/05/2021
(43) Publication Date : 02/07/2021

(54) Title of the invention : RELATIONSHIP MARKETING FOR HEALTHCARE: PRESENT AND FUTURE.

(51) International classification	:G06Q0030020000, G06Q0050220000, G06Q0010100000, G16H0015000000, G06Q0090000000
(31) Priority Document No	:NA
(32) Priority Date	:NA
(33) Name of priority country	:NA
(86) International Application No	:NA
Filing Date	:NA
(87) International Publication No	: NA
(61) Patent of Addition to Application Number	:NA
Filing Date	:NA
(62) Divisional to Application Number	:NA
Filing Date	:NA

(71)**Name of Applicant :**
1)Dr. Meera Kulkarni (Professor & Head- Management Department)
Address of Applicant :Institute of Management Studies Career Development & Research Station Road, Ahmednagar -414001, MH, India. E-mail: meera630@gmail.com Mo No: 9325109011 Maharashtra India
2)Dr. Rahul Kailash Khandelwal (Assistant Professor)
(72)**Name of Inventor :**
1)Dr. Meera Kulkarni (Professor & Head- Management Department)
2)Dr. Rahul Kailash Khandelwal (Assistant Professor)

(57) Abstract :
Abstract Our Invention Relationship Marketing for Healthcare: Present and Future is a partnership marketing perform at a period when partnerships have been accepted as an important part of innovative distribution philosophy and practice. The intend of this invention is to objectively examine the current state of partnership advertising, Healthcare status update and to solicit fresh suggestions for moving the field further. Design, technique, Health monitoring and strategy: We had an open request for research on partnership marketing that had an initial viewpoint and advanced thought, and we received 50-articles, 100- patient that were quadruple reviewed. This problem contains five of these research/ papers. Furthermore, we invited well-known think makers who have committed to relationship marketing theory growth. The four reflective, forward-thinking comments in this topic kick off the issue. The following are the findings: A number of liked to think perspectives and study results are discussed, urging partnership marketing organizations to discover at new directions for the future of the field. Looking for a shared ground in partnership marketing thought, analysing the degree to which various information streams contribute to marketing analysis, Healthcare analysis and when they don't, and screening the lessons in new environments may be a prominent path forward. Constraints and purpose of the results.

No. of Pages : 14 No. of Claims : 6

(12) PATENT APPLICATION PUBLICATION
(21) Application No.202121022974 A
(19) INDIA
(22) Date of filing of Application :24/05/2021
(43) Publication Date : 02/07/2021

(54) Title of the invention : SMART SAFETY WRISTBAND FOR ALL

(51) International classification	:G08B0025010000, G08B0021020000, H04W0004120000, A61B0005000000, G08B0025000000
(31) Priority Document No	:NA
(32) Priority Date	:NA
(33) Name of priority country	:NA
(86) International Application No	:NA
Filing Date	:NA
(87) International Publication No	: NA
(61) Patent of Addition to Application Number	:NA
Filing Date	:NA
(62) Divisional to Application Number	:NA
Filing Date	:NA

(71)**Name of Applicant :**
1)Dr. Sushila Manish Palwe
Address of Applicant :School of CET, MIT World Peace University, Pune 411038, MH, India. Email: sushaghav@gmail.com Maharashtra India
2)Prerna Prakash Lahane
3)Anita Gunjal
(72)**Name of Inventor :**
1)Dr. Sushila Manish Palwe
2)Prerna Prakash Lahane
3)Anita Gunjal

(57) Abstract :
Abstract Smart Safety Wristband is aimed to provide personal safety for individuals of any age and gender. This intelligent system involves two way safety which works according to mode of operation. In first mode, System detects the troublesome situation and initiates the Need help • message. In second mode, pre-registered contacts (family members/friends), initiates the system by sending the Check status • message through remote location. This mechanism helps to recognize (understand) the person in trouble and helps the person to get help by intimating his / her Need help • message to the near-ones. This safety mechanism involves multiple intelligence techniques to detect the threat scenario, such as image processing and transmission, audio capturing and transmission and biomedical signal processing. With the help of these intelligent techniques, this device became smart to detect the troublesome scenario of the individual and to take the important steps to help the person. Invention is able to handle false alarms with the help of captured audios. With a second-mode initiation option, this invention is helpful for old-age individuals and children who may be missing and unaware of their troublesome situation.

No. of Pages : 18 No. of Claims : 9

(12) PATENT APPLICATION PUBLICATION
(21) Application No.202121023255 A
(19) INDIA
(22) Date of filing of Application :25/05/2021
(43) Publication Date : 02/07/2021

(54) Title of the invention : CONDUCTING LIQUID VORTEX DC MOTOR

(51) International classification	:A61B0017220000, H02J0007020000, H02K0044040000, H02J0050900000, H02K0029080000
(31) Priority Document No	:NA
(32) Priority Date	:NA
(33) Name of priority country	:NA
(86) International Application No	:NA
Filing Date	:NA
(87) International Publication No	: NA
(61) Patent of Addition to Application Number	:NA
Filing Date	:NA
(62) Divisional to Application Number	:NA
Filing Date	:NA

(71)**Name of Applicant :**
1)Dr. Vishwanath Karad MIT World Peace University
Address of Applicant :S.No, 124, Paud Road, Kothrud, Pune 411038, Maharashtra, India Maharashtra India
(72)**Name of Inventor :**
1)Nabharun Niloy Bhattacharya
2)Garv Sethi
3)Vinit Ritesh Oswal
4)Dr. Anita Nene

(57) Abstract :
CONDUCTING LIQUID VORTEX DC MOTOR Abstract Disclosed is a conducting liquid vortex DC motor (100) comprises an electrically conducting liquid (20) being placed between a pair of DC supply terminals(12a,12b) in a terminal vessel (12) and between magnetic fields produced by a plurality of magnets (10). Upon excited by an electric supply (30), the conducting liquid (20) experiences a uniform and strong magnetic field, and produces an angular momentum that accelerates the conducting liquid (20) to whirl in a direction that is mutually perpendicular to both electric and magnetic fields around. The momentum thus generated is further absorbed by a blade pate (46) and is coupled to a load through a coupling means (40) having a sleeve (42), shaft (44), and a plurality of bearings (48). Thus, motor replaces a conventional motor (100) windings by a plurality of magnets (10) and conducting liquid (20), so as to reduce the losses associated with the windings. Figure 1

No. of Pages : 30 No. of Claims : 16

(12) PATENT APPLICATION PUBLICATION
(21) Application No.202121023292 A
(19) INDIA
(22) Date of filing of Application :25/05/2021
(43) Publication Date : 02/07/2021

(54) Title of the invention : A MODIFIED POSTURE CORRECTION RUCKSACK

(51) International classification	:A45F0003040000, A45F0003120000, A45F0003080000, A63B0021065000, A45F0003020000
(31) Priority Document No	:NA
(32) Priority Date	:NA
(33) Name of priority country	:NA
(86) International Application No	:NA
Filing Date	:NA
(87) International Publication No	: NA
(61) Patent of Addition to Application Number	:NA
Filing Date	:NA
(62) Divisional to Application Number	:NA
Filing Date	:NA

(71)**Name of Applicant :**
1)TOPIWALA, Simran Jatin
Address of Applicant :Krishna College of Physiotherapy, Krishna Institute of Medical Sciences Deemed to be University, Karad, Satara, Maharashtra -415539. Maharashtra India
2)SAHOO, Kashinath
(72)**Name of Inventor :**
1)TOPIWALA, Simran Jatin
2)SAHOO, Kashinath

(57) Abstract :
The present invention provides a modified posture correction rucksack 100. The rucksack 100 includes one or more pockets, a first shoulder strap 10, a second shoulder strap 20, an abdomen strap 30 and a force distributing assembly 40. The force distributing assembly 40 is arranged on a posterior surface 110 of the rucksack 100. The force distributing assembly 40 has a first pad 42 and a second pad 44 configured in the same shape. The first pad 42 is rigid, and the second pad 44 is flexible. The force distributing assembly 40 distributes the weight force of the rucksack 100 when a user is carrying articles in the rucksack 100. The reactive forces in the straps (10, 20, 30) neutralise the distribution of the weight forces. The rucksack 100 reduces the bending of user 300 when user 300 carrying articles in the rucksack 100.

No. of Pages : 24 No. of Claims : 6

(12) PATENT APPLICATION PUBLICATION
(21) Application No.202121023372 A
(19) INDIA
(22) Date of filing of Application :25/05/2021
(43) Publication Date : 02/07/2021

(54) Title of the invention : THE SMART MINI PORTABLE ROOM HEATER.

(51) International classification	:F24F0011300000, G08B0021240000, G01J0005080000, G08B0021220000, G08B0013080000	(71)**Name of Applicant :** **1)Tikendra Nath Verma** Address of Applicant :Assistant Professor , Department of Mechanical Engineering, Maulana Azad National Institute of Technology Bhopal,462003, INDIA Madhya Pradesh India
(31) Priority Document No	:NA	**2)Tushar Choudhary**
(32) Priority Date	:NA	**3)Madhusmita Sahu**
(33) Name of priority country	:NA	**4)K. V. Vara Lakshmi**
(86) International Application No	:NA	**5)Tulala Rajasanthosh Kumar**
Filing Date	:NA	(72)**Name of Inventor :**
(87) International Publication No	: NA	**1)Tikendra Nath Verma**
(61) Patent of Addition to Application Number	:NA	**2)Tushar Choudhary**
Filing Date	:NA	**3)Madhusmita Sahu**
(62) Divisional to Application Number	:NA	**4)K. V. Vara Lakshmi**
Filing Date	:NA	**5)Tulala Rajasanthosh Kumar**

(57) Abstract :
The smart mini portable room heater comprising device and machine for heating an electronic cellular tool. The more particularly present invention relates to gadget comprises a mobile electronic device along with a power supply association and a released heating arrangement detachably coupled to the cell digital device. When the heating association is coupled to the mobile digital tool, the heating association draws power from the strength deliver association to generate heat. Also the presence of a person in a room, detecting the presence of cell telephone indicators within the room indicating occupant within the room, detecting frame warmness, detecting an ambient temperature, detecting an ambient humidity, detecting movement, detecting door lock positions of on or off, detecting TV sounds, detecting the time of day, detecting TV faraway indicators getting used over time frame, detecting noise from a door closing and beginning of the device and maintain the all data store it.

No. of Pages : 30 No. of Claims : 10

(12) PATENT APPLICATION PUBLICATION
(21) Application No.202121023396 A
(19) INDIA
(22) Date of filing of Application :26/05/2021
(43) Publication Date : 02/07/2021

(54) Title of the invention : DESIGN OF AUTOMATED ECONOMICAL MULTI-SUGARCANE BUD EXTRACTOR.

(51) International classification	:G06Q0010060000, B26D0005000000, C05F0011080000, B26D0007060000, B26D0011000000
(31) Priority Document No	:NA
(32) Priority Date	:NA
(33) Name of priority country	:NA
(86) International Application No	:NA
Filing Date	:NA
(87) International Publication No	: NA
(61) Patent of Addition to Application Number	:NA
Filing Date	:NA
(62) Divisional to Application Number	:NA
Filing Date	:NA

(71)**Name of Applicant :**
1)Dr.Pravin Popat Hujare
Address of Applicant :Associate Professor, Vishwakarma Institute of Information Technology, Pune. India. Also Residing at Flat No.-502,Wing-H, Grandeview7, Behind Podar English School, Ambegaon (BK.) Pune, Maharashtra. Pin Code-411046. Maharashtra India
(72)**Name of Inventor :**
1)Dr.Pravin Popat Hujare
2)Dr.Rajendra Shankar Talware
3)Mandar Himmatrao Sonar
4)Kalpesh Prakash Patil
5)Neha Sanjay Sonawane
6)Durva Manohar Badodekar
7)Ankit Santosh Gupta

(57) Abstract :
Abstract: The present disclosure works on a innovative approach on economical multi sugarcane bud extractor as Agriculture is the only means of living for almost two thirds of the workers in India. The agriculture sector of India has occupied 43% of India™s geographical area, and is contributing 16.1% of India™s GDP. Agriculture still contributes significantly to India™s GDP despite decline of its share in India™s GDP. Sugarcane is one of the important commercial crops grown in India. In India agriculture is facing serious challenges like scarcity of agricultural labor, not only in peak working seasons but also in normal time. This is mainly for increased nonfarm job opportunities having higher wage, migration of labor force to cities and low status of agricultural labors in the society. In this disclosure titled automated multi bud cutting machine we can obtain maximum productivity in minimum time with precision. Also this automated multi bud cutter machine requires less number of labors for its operation. This automated multi bud cutter machine is very user friendly. In this Innovative disclosure, we have managed maximum productivity by cutting three sugarcane buds simultaneously using a single cutter in single stroke with precision by adjusting all three sugarcane buds inline. Hence the overall efficiency of this machine is more. There is also a demand for reducing the wastage of sugarcane during bud cutting process. This automated bud cutting machine helps to reduce wastage of sugarcane and reduce the time require for cutting. So survey is done to develop new automated sugarcane bud machine.

No. of Pages : 13 No. of Claims : 5

(12) PATENT APPLICATION PUBLICATION
(21) Application No.202121023513 A
(19) INDIA
(22) Date of filing of Application :27/05/2021
(43) Publication Date : 02/07/2021

(54) Title of the invention : VIBRATIONAL CLAMP ON FLOW METER

(51) International classification	:G01F0001740000, G01F0001660000, G01F0001580000, G01F0001000000, G01F0001560000
(31) Priority Document No	:NA
(32) Priority Date	:NA
(33) Name of priority country	:NA
(86) International Application No	:NA
Filing Date	:NA
(87) International Publication No	: NA
(61) Patent of Addition to Application Number	:NA
Filing Date	:NA
(62) Divisional to Application Number	:NA
Filing Date	:NA

(71)**Name of Applicant :**
1)Mr.Aditya Vinayak Khasnis,
Address of Applicant :Residing at 69/27, Janata, Pradhikaran, Nigdi, Pune 411044. Maharashtra, India, an Indian National. Maharashtra India
2)Mr.Tanmay Anil Pisal
3)Mr.Prajyot Ram Chaunpurge
4)Mr.Deepak Samadhan Prajapati
5)Mr.Omkar Dnyaneshwar Mulje.
6)Mr.Vishal Balaso Patil
(72)**Name of Inventor :**
1)Mr.Aditya Vinayak Khasnis,
2)Mr.Tanmay Anil Pisal
3)Mr.Prajyot Ram Chaunpurge
4)Mr.Deepak Samadhan Prajapati
5)Mr.Omkar Dnyaneshwar Mulje.

(57) Abstract :
ABSTRACT: Clamp on flow meter is a flow measuring device for measuring discharge of the fluid through the pipeline. Traditionally different kind of flow meter was used to measure the discharge of the fluid flowing through the flowline such as venturi meter and orifice meter. In order to be able to use the traditional flow meter devices it was essential that user should cut through the pipeline for installing the flow measuring device and this was one of the biggest drawbacks of those flow measuring devices. Presently there are some new technologies in this field such as ultrasonic clamp on flow meter and electromagnetic clamp on flow meter to name a few. Main concern regarding these flow measuring devices consists of installation and feasibility issues hence there is a need for an effective and efficient clamp on flow meter device which will overcome the flaws of existing flow measuring devices and will set a bench mark for upcoming technologies in this field. This device can be applicable in every fluid management industry and fluid industry constantly need to keep track on the quantity of fluid present in their close pipeline network, this device can help them in knowing the amount of fluid present in the flow line, Every corporate complex, small scale industry can use this device for better planning and management of their fluid resources and Housing societies can implement this device on to their flowline systems for enabling effective and efficient resource management Figure-1

No. of Pages : 20 No. of Claims : 9

(12) PATENT APPLICATION PUBLICATION
(21) Application No.202121023571 A
(19) INDIA
(22) Date of filing of Application :27/05/2021
(43) Publication Date : 02/07/2021

(54) Title of the invention : A BLOCK-CHAIN BASED SYSTEM AND A METHOD FOR AN AUCTION-BASED BIDDING

(51) International classification	:H04L0009320000, G06Q0020380000, G06Q0030080000, H04L0029080000, G06Q0020060000	(71)**Name of Applicant :** **1)Dr. Shraddha Pankaj Phansalkar** Address of Applicant :MIT School of Engineering, MITADT University, Solapur - Pune Highway, Near Bharat Petrol Pump, Loni Kalbhor, 412201 Maharashtra India **2)Dr. Rajani Sangappa Sajjan** **3)Prof. Nagesh Narayan Jadhav**
(31) Priority Document No	:NA	
(32) Priority Date	:NA	
(33) Name of priority country	:NA	
(86) International Application No	:NA	(72)**Name of Inventor :** **1)Dr. Shraddha Pankaj Phansalkar** **2)Dr. Rajani Sangappa Sajjan** **3)Prof. Nagesh Narayan Jadhav**
Filing Date	:NA	
(87) International Publication No	: NA	
(61) Patent of Addition to Application Number	:NA	
Filing Date	:NA	
(62) Divisional to Application Number	:NA	
Filing Date	:NA	

(57) Abstract :
ABSTRACT A BLOCK-CHAIN BASED SYSTEM AND A METHOD FOR AN AUCTION-BASED BIDDING A system 101 and a method 500 for an auction-based bidding is disclosed. The system 101 may be communicatively coupled with a plurality of external systems (104-a-104-n). Each external system may generate a plurality of network data auction-based bidding sub-events, corresponding to network data in at least one auction-based bidding event. The system 101 may guarantee a mechanism for quick consensus that may assure terminality, integrity, authenticity of the transactions by augmenting the framework of Blockchain with off-chain storages as well as the consensus mechanisms that may guarantee a quicker validation of the transactions in real world scenarios. The present invention provides designing of the decentralized quorum-based consensus algorithm mechanism which may have at-least one Common- validator among the quorums, thereby making the participant validators of the system to agree on the valid transactions that may be finally part of the proposed block in blockchain. [To be published with Figure 1]

No. of Pages : 25 No. of Claims : 10

(12) PATENT APPLICATION PUBLICATION
(21) Application No.202121023591 A
(19) INDIA
(22) Date of filing of Application :27/05/2021
(43) Publication Date : 02/07/2021

(54) Title of the invention : ULTRASONIC ENHANCED Y-TYPE MICROCHANNEL EMULSIFICATION SYSTEM ANDDRUG ENCAPSULATION PROCESS USING THE SAID SYSTEM • .

(51) International classification	:A61K0047320000, A61K0009140000, A61K0009510000, A61K0047100000, A61K0031138000
(31) Priority Document No	:NA
(32) Priority Date	:NA
(33) Name of priority country	:NA
(86) International Application No	:NA
Filing Date	:NA
(87) International Publication No	: NA
(61) Patent of Addition to Application Number	:NA
Filing Date	:NA
(62) Divisional to Application Number	:NA
Filing Date	:NA

(71)**Name of Applicant :**
1)Sanjaykumar Rameshbhai Patel
Address of Applicant :Department of Chemical Engineering, S. V. National Institute of Technology (SVNIT), Ichchhanath, Surat-395007, INDIA. Gujarat India
2)Preena Shrimal
3)Girirajsinh Chandrasinh Jadeja
(72)**Name of Inventor :**
1)Preena Shrimal
2)Sanjaykumar Rameshbhai Patel
3)Girirajsinh Chandrasinh Jadeja

(57) Abstract :
The present invention relates to emulsification system and a process to encapsulate active pharmaceutical ingredients (APIs). More particularly, the present invention relates to ultrasonic enhanced Y-type microchannel emulsification system and a process to encapsulate active pharmaceutical ingredients (APIs) using the said system. The ultrasonic enhanced Y-type microchannel emulsification system of the present invention provides controlled therapeutic release profile, and the chance of accurately targeting the drug molecules to the specific site. A process to encapsulate active pharmaceutical ingredients (APIs) using ultrasonic enhanced Y-type microchannel emulsification system converts drug particles into nanoparticles having particle size less than 150nm and helps in effectively enhancing its aqueous solubility and bioavailability. The nanoparticles of active pharmaceutical ingredients (APIs) produced with the process of present invention reduces drug side effects, controlled drug release, and enhanced bioavailability.

No. of Pages : 41 No. of Claims : 16

(12) PATENT APPLICATION PUBLICATION
(19) INDIA
(22) Date of filing of Application :27/05/2021
(21) Application No.202121023654 A
(43) Publication Date : 02/07/2021

(54) Title of the invention : AN APPARATUS FOR ENVIRONMENTAL AQUA AND ENERGY SPREAD SUPPORT

(51) International classification	:C02F0001140000, B01D0001000000, G06F0030200000, B09C0001000000, B01D0005000000
(31) Priority Document No	:NA
(32) Priority Date	:NA
(33) Name of priority country	:NA
(86) International Application No	:NA
Filing Date	:NA
(87) International Publication No	: NA
(61) Patent of Addition to Application Number	:NA
Filing Date	:NA
(62) Divisional to Application Number	:NA
Filing Date	:NA

(71)**Name of Applicant :**
1)PATASKAR ANANT NARAYAN
Address of Applicant :FLAT NO 3 SHRI SAMARTH APARTMENT, SMARTH NAGAR, NASHIK, MAHARASHTRA, PIN 422005, INDIA Maharashtra India
(72)**Name of Inventor :**
1)PATASKAR ANANT NARAYAN

(57) Abstract :
An apparatus (10) for environmental aqua and energy spread support is disclosed. The apparatus includes a first stage configured to perform sea water/water intake, quick evaporation, fast vapor displacement, condensation and condensation released heat energy capture, transfer, circulation and reutilization for evaporation and help in energy conservation in water distribution. The apparatus includes a second stage configured to capture pollutants, transport aqua carbon and pollutant mixture and gravitationally transported for soil moisturizing, and soil carbon sequestering. The apparatus a third stage configured to make soil moist gravitationally for aqua spread and ground water recharge and provide greenhouse gases sequestration by aqua spread and storage, re-vegetation, soil conservation and regenerative impact on biodiversity. The apparatus includes an environmental block configured to accommodate various renewable energies generated by VAWT, PV, solar trough, vapor, gravitational and barometric pressure. FIG. 1

No. of Pages : 33 No. of Claims : 9

(12) PATENT APPLICATION PUBLICATION
(21) Application No.202121023712 A
(19) INDIA
(22) Date of filing of Application :27/05/2021
(43) Publication Date : 02/07/2021

(54) Title of the invention : THE SMART SYSTEM FOR MEDICAL IMAGEVIEWING BY USING ARTIFICIAL INTELLIGENCE NEURAL NETWORK

(51) International classification	:G06Q0050000000, G16H0050200000, G06N0003020000, G06Q0050180000, G06F0016000000
(31) Priority Document No	:NA
(32) Priority Date	:NA
(33) Name of priority country	:NA
(86) International Application No	:NA
Filing Date	:NA
(87) International Publication No	: NA
(61) Patent of Addition to Application Number	:NA
Filing Date	:NA
(62) Divisional to Application Number	:NA
Filing Date	:NA

(71)**Name of Applicant :**
1)Rajeshwari R
Address of Applicant :Assistant Professor, Departmrnt Of Biomedical Engineering, Kpr Institute Of Engineering & Technology Azad National Institute of Technology City Coimbatore State Tamil Nadu Country INDIA Tamil Nadu India
2)Rajat Kapila
3)Dr. Shubhajit Halder
4)Dr. Rachna Kohar
5)Dr. S. Poongodi
6)Amit Kumar
7)Chhaya Nayak
8)Anandan.D
9)Anuj Kumar
10)Jemal Mohammed Amin
(72)**Name of Inventor :**
1)Rajeshwari R
2)Rajat Kapila
3)Dr. Shubhajit Halder
4)Dr. Rachna Kohar
5)Dr. S. Poongodi
6)Amit Kumar
7)Chhaya Nayak
8)Anandan.D
9)Anuj Kumar
10)Jemal Mohammed Amin

(57) Abstract :
The smart system for medical image viewing by using artificial intelligence neural network comprising invention relates to generally to the field of medical data. More especially, the present specification is associated with systems and strategies for storing, processing, accessing and viewing medical photo records by means of presenting an stop-to-quit structure that allows the speedy synchronization of snap shots, efficient rendering of images on cellular gadgets, application of photograph processing functions in a cloud computing environment, education and application of neural community analyses on photographs, and upkeep and communique of kingdom statistics for modified photographs, among other functions. The structures also include a server tailored to be outside to the nearby vicinity community and in facts verbal exchange with the syncing application and a patron-facet viewing utility established on one or greater of the computing gadgets. The consumer-facet viewing software is configured to collect the research, including unrendered facts consultant data.

No. of Pages : 29 No. of Claims : 10

(12) PATENT APPLICATION PUBLICATION
(21) Application No.202121023735 A
(19) INDIA
(22) Date of filing of Application :28/05/2021
(43) Publication Date : 02/07/2021

(54) Title of the invention : GRINDING ATTACHMENT FOR VERTICAL DRILL MACHINE

(51) International classification	:B23P0015000000, B23Q0011100000, C22C0038500000, B24B0009060000, B23K0026382000
(31) Priority Document No	:NA
(32) Priority Date	:NA
(33) Name of priority country	:NA
(86) International Application No	:NA
Filing Date	:NA
(87) International Publication No	: NA
(61) Patent of Addition to Application Number	:NA
Filing Date	:NA
(62) Divisional to Application Number	:NA
Filing Date	:NA

(71)**Name of Applicant :**
1)MISHRA YASH RAJNEESHBHAI
Address of Applicant :Block No-6, Mechanical Engineering Department, L.D. College of Engineering, Ahmedabad Gujarat India
2)SHUKLA MAHARSHI TUSHAR
3)KHEMKA UTSAV SHAILENDRA
4)AGARWAL PRANAV SUMANKUMAR
5)Dr. Hiren M. Gajera
6)Vasani Jayendra Pankajbhai
(72)**Name of Inventor :**
1)MISHRA YASH RAJNEESHBHAI
2)SHUKLA MAHARSHI TUSHAR
3)KHEMKA UTSAV SHAILENDRA
4)AGARWAL PRANAV SUMANKUMAR
5)Dr. Hiren M. Gajera
6)Vasani Jayendra Pankajbhai

(57) Abstract :
Manufacturing & Production have always been an enormous field of application in the engineering discipline. Every component of a pin to a modern-day aircraft is manufactured by series of machining and manufacturing processes. The drilling operation is one of the most used amongst them. With an increase in demand for goods, the Quality of the product plays a very important role in the Manufacturing Sector. Most of the manual drilling operations compromise the surface finish on the other side of the work piece job after the hole has been drilled. Consequently, the work piece job loses its surface finish and requires the grinding operation to gain back the original finish. The traditional process includes dismounting the work piece job and transferring it and performing the grinding operation through the Hand or Automatic Grinder. This is a time-consuming process when multiple holes are to be drilled or the job is massive to be moved. So, to obviate the difficulties it feasible and viable to deploy an attachment that readily removes the unwanted metal that has protruded after drilling a hole.

No. of Pages : 39 No. of Claims : 5

(12) PATENT APPLICATION PUBLICATION
(21) Application No.202121023739 A
(19) INDIA
(22) Date of filing of Application :28/05/2021
(43) Publication Date : 02/07/2021

(54) Title of the invention : MOBILE COMMUNICATION PRANK CALLS AVOIDANCE BY PREFIXES AND NUMBER FORMATS.

(51) International classification	:H04M0003436000, H04W0012120000, H04M0003510000, H04M0003420000, B66B0001240000
(31) Priority Document No	:NA
(32) Priority Date	:NA
(33) Name of priority country	:NA
(86) International Application No	:NA
Filing Date	:NA
(87) International Publication No	: NA
(61) Patent of Addition to Application Number	:NA
Filing Date	:NA
(62) Divisional to Application Number	:NA
Filing Date	:NA

(71)**Name of Applicant :**
1)Mr.Yashwant Sudhakar Ingle
Address of Applicant :Assistant Professor, Department of Computer Engineering Modern Education Society's College of Engineering, 19, Late Prin. V.K. Joag Path, Wadia College Campus, Pune 411001. Pune, India Maharashtra India
(72)**Name of Inventor :**
1)Mr.Yashwant Sudhakar Ingle
2)Dr.(Mrs.) Nuzhat Faiz Shaikh
3)Dr .Vijay B Gadicha
4)Mr. Umakant Dinkar Butkar
5)Mr. Santosh Balkrishna Patil
6)Rupesh Gangadhar Mahajan
7)Vishakha Rajendra Bhadane
8)Minal Dinkar Shahakar
9)Ms. Pritibala S. Ingle
10)Ajay Garg
11)Dr. Talal Alasmari
12)Mr. Abhijeet Dinkar Cholke

(57) Abstract :
ABSTRACT Our Invention Mobile Communication Prank Calls Avoidance by Prefixes and Number Formats is available to give a mobile user prank calls and cause distress by it. The user can be anyone certainly the Prank Calls are not welcome by anyone except the persons making them or promoting them. I want to put a restrictive measure for making mobile user able to decide over his calls and avoid prank calls and also people who are receiving prank calls have to call up Customer Care Services and it™s having limitations these days to call them 3 times a day. If the prank call receiver calls in distress more than 3 times probably he loses his Service to call to Call to Customer Care from his SIM. The email reply by Customer Care comes within 48 Hrs or even a delayed response is received sometimes. Prank calls may come from different numbers at different times so person can™t predict no to block always and use call manager facility provided to him becomes inefficient and also the available ways don™t solve the problem of person meeting harassment by prank calls. This is more serious offense in some cases leads to serious losses and also we propose the simple solutions to save the innocent persons being targeted by the prank calls by using prefixes and number formats and also the formats need to meet some change and the verification process is added to ensure type of call and signal it to the user on screen.

No. of Pages : 11 No. of Claims : 5

(12) PATENT APPLICATION PUBLICATION
(21) Application No.202121023741 A
(19) INDIA
(22) Date of filing of Application :28/05/2021
(43) Publication Date : 02/07/2021

(54) Title of the invention : INTRAVENOUS CONTAINER ATTENTIVE SYSTEM AND METHOD (IVCAS)

(51) International classification	:A61B0005000000, G06Q0050220000, A61M0005168000, C08K0003220000, G16H0040200000	(71)**Name of Applicant :** **1)Hexa Instruments Pvt Ltd** Address of Applicant :5/216, Shivshakti - B, V. G. Pnigle Marg, Chinchpokli East, Mumbai Maharashtra India (72)**Name of Inventor :** **1)Jakir Abbas Tamboli**
(31) Priority Document No	:NA	
(32) Priority Date	:NA	
(33) Name of priority country	:NA	
(86) International Application No	:NA	
Filing Date	:NA	
(87) International Publication No	: NA	
(61) Patent of Addition to Application Number	:NA	
Filing Date	:NA	
(62) Divisional to Application Number	:NA	
Filing Date	:NA	

(57) Abstract :
The INTRAVENOUS CONTAINER ATTENTIVE SYSTEM (IVCAS) is a new prototype designed and invented for looking at the present need in the health care industry due to current pandemic. This innovation will be very useful for the patient's and will be of excellent use to the anesthesiologist, nursing staff, and other health care assistants, by easing their workload and stress. IVCAS are using electromechanical component which gives accurate information of IV Container and provides timely alerts about fluid level in IV bag. IVCAS is designed to work on very low current and can be operated on battery. IVCAS is equipped with buzzer (Remote alarming) and LED indicators (local presence).

No. of Pages : 28 No. of Claims : 9

(12) PATENT APPLICATION PUBLICATION
(21) Application No.202121023777 A
(19) INDIA
(22) Date of filing of Application :28/05/2021
(43) Publication Date : 02/07/2021

(54) Title of the invention : DEEP NEURAL NETWORK BASED OFFLOADING OF VIDEO SURVEILLANCE IOT APPLICATIONS IN CLOUD COMPUTING

(51) International classification	:H04L0029080000, H04N0007180000, G06F0009500000, G06N0003040000, G06N0003080000
(31) Priority Document No	:NA
(32) Priority Date	:NA
(33) Name of priority country	:NA
(86) International Application No	:NA
Filing Date	:NA
(87) International Publication No	: NA
(61) Patent of Addition to Application Number	:NA
Filing Date	:NA
(62) Divisional to Application Number	:NA
Filing Date	:NA

(71)**Name of Applicant :**
1)Ms. Aruna Animish Pavate
Address of Applicant :Research Scholar/Assistant Professor, Information Technology, Thakur College of Engineering and Technology/ St. Francis institute of Technology, Address: Kandivali(E) Mumbai, Pin - 400101. Maharashtra India
2)Ms.Anita Jitendra Chaudhari
3)Mr.Sunny Bhavan Sall
4)Mr. Rahul Neve
5)Dr. Rajesh Bansode
(72)**Name of Inventor :**
1)Ms. Aruna Animish Pavate
2)Ms.Anita Jitendra Chaudhari
3)Mr.Sunny Bhavan Sall
4)Mr. Rahul Neve
5)Dr. Rajesh Bansode

(57) Abstract :
In this paper, a Deep Neural Network-based offloading of video surveillance in cloud computing is proposed. To offload the video surveillance IoT applications with the deep neural network model is trained. The video surveillance framework will move computational workflows from the network core to the network edges, lowering network connectivity overhead and enabling low-latency, reliable video analysis. The Internet of Things (IoT) generates the data by connecting the number of devices connecting via the Internet facility. It will necessitate trying to offload video surveillance IoT applications to allow resource-rich networks like cloud computing and edge computing to handle heavy computing and storing resources. Edge Computing is an emerging key driver for latency-sensitive problems, but its implementation poses new obstacles. Furthermore, various server structures and offloading techniques have a significant effect on IoT device service time efficiency. This invention is intended in developing the offloading of video surveillance in IoT applications. Embedded system technological advances have enabled the creation of more efficient computing devices with limited footprints which can perform simple research and identification activities without depending on a cloud infrastructure. This invention uses cloud computing using deep neural networks. The video streams provided by network cameras are sent to the remote cloud computing environment, the transferred data consumes a significant amount of bandwidth utilization. The proposed Deep Neural Network is utilized to achieve the offloading video surveillance to improve the resource utilization and service time in cloud computing environments.

No. of Pages : 15 No. of Claims : 3

(12) PATENT APPLICATION PUBLICATION
(21) Application No.202121023839 A
(19) INDIA
(22) Date of filing of Application :28/05/2021
(43) Publication Date : 02/07/2021

(54) Title of the invention : SMARTMON: MONITORING THE STATUS OF SMART DEVICES VIA NETWORK TRAFFIC

(51) International classification	:H04L0029060000, H04L0029080000, G05B0019418000, G05B0015020000, G06F0021560000
(31) Priority Document No	:NA
(32) Priority Date	:NA
(33) Name of priority country	:NA
(86) International Application No	:NA
Filing Date	:NA
(87) International Publication No	: NA
(61) Patent of Addition to Application Number	:NA
Filing Date	:NA
(62) Divisional to Application Number	:NA
Filing Date	:NA

(71)**Name of Applicant :**
1)Dr. G. Murugan
Address of Applicant :Professor in Computer Engineering, St. John College of Engineering and Management, Vevoor, Manor Road, Palghar (E), Palghar, India Maharashtra India
2)Keerthipati Kumar
3)Dr. Manas Ranjan Nayak
4)Mr. Sidhanta Kumar Balabantary
5)Mr. Walunj Madhukar Baban
6)Dr. Nilesh Parihar
7)Mr. Amit kumar Sharma
8)Dr. A. V. Sudhakara Reddy
9)Dr. Harikumar Pallathadka
10)Dr. Sushma Jaiswal
11)r. Sankararao Majji
12)Kaviyaraj R
(72)**Name of Inventor :**
1)Dr. G. Murugan
2)Keerthipati Kumar
3)Dr. Manas Ranjan Nayak
4)Mr. Sidhanta Kumar Balabantary
5)Mr. Walunj Madhukar Baban
6)Dr. Nilesh Parihar
7)Mr. Amit kumar Sharma
8)Dr. A. V. Sudhakara Reddy
9)Dr. Harikumar Pallathadka
10)Dr. Sushma Jaiswal
11)r. Sankararao Majji
12)Kaviyaraj R

(57) Abstract :
The rapid growth of the IoT has led to unprecedented changes in our everyday lives. Among other things, the most common smart home technologies. They create a connected network in which automation is used to improve system Interoperability. In your home environment they use different devices. This type of automation typically runs on platforms that device providers including Samsung, Google and Amazon offer. But, because of malware, unknown applications by third party, and possibly lateral attacks, back-end cloud cannot always be trustworthy. For IoT platforms, in particular, two security threats can be identified which could gain unauthorized control of smart home devices. This thesis shows SmartMon, a framework which detects such violations of security by statically analysing the control logic and parking them with a dynamic execution pattern (SmartApp).

No. of Pages : 6 No. of Claims : 7

(12) PATENT APPLICATION PUBLICATION
(21) Application No.202121023956 A
(19) INDIA
(22) Date of filing of Application :29/05/2021
(43) Publication Date : 02/07/2021

(54) Title of the invention : USE OF NATURAL PIGMENTS FOR PRODUCTION OF VARIOUS COLORED NUTRITIONAL GUMMY SUPPLEMENT.

(51) International classification	:C07K0014795000, C09B0061000000, C12N0001200000, A23L0002580000, A23G0003340000	(71)**Name of Applicant :** **1)Dr. Mona Kejariwal** Address of Applicant :RD & SH National College, BANDRA WEST , MUMBAI-400050, MH, India. Maharashtra India **2)Mrs. Rashmi Pandey**
(31) Priority Document No	:NA	(72)**Name of Inventor :**
(32) Priority Date	:NA	**1)Dr. Mona Kejariwal**
(33) Name of priority country	:NA	**2)Mrs. Rashmi Pandey**
(86) International Application No	:NA	
Filing Date	:NA	
(87) International Publication No	: NA	
(61) Patent of Addition to Application Number	:NA	
Filing Date	:NA	
(62) Divisional to Application Number	:NA	
Filing Date	:NA	

(57) Abstract :
ABSTRACT Our Invention Use of Natural pigments for production of various colored Nutritional gummy supplement is a Gummy bear have been an excellent source of delivery systems for pharmaceuticals as well as nutritional bioactive especially for kids. They are simultaneously gaining acceptance in adult as drug delivery systems. The use of natural color pigment increases owing to their safety and acceptance in such preparation. To cater to such a demand new natural pigments are continuously searched upon. Phycocyanin, a natural blue colour pigment from microalgae have been one such pigment of importance as a food additive and colourant. Being a natural antioxidant it also adds nutritional value to it. Phycocyanin exhibist color variation in different pH soluton. In this invention we have used Phycocyanin extracted from Spirulina microalgae as a single natural colourant to give various colored product by slightly altering the pH of the product with use of buffers. The final outcome is vegan antioxidant gummy bears of different shades using natural colour pigment Phycocyanin. These could be used as base for addition of various additives to suit the need of bioactive delivery.

No. of Pages : 11 No. of Claims : 6

(12) PATENT APPLICATION PUBLICATION
(21) Application No.202121023957 A
(19) INDIA
(22) Date of filing of Application :29/05/2021
(43) Publication Date : 02/07/2021

(54) Title of the invention : AUTOMATED BATTERY DISTILLED WATER FILLING, WATER FILTER FLUSHING AND FERTILIZERS SPRAYER.

(51) International classification	:H01M0002360000, A61K0009000000, B60L0050640000, G06T0011600000, A61H0007000000
(31) Priority Document No	:NA
(32) Priority Date	:NA
(33) Name of priority country	:NA
(86) International Application No	:NA
Filing Date	:NA
(87) International Publication No	: NA
(61) Patent of Addition to Application Number	:NA
Filing Date	:NA
(62) Divisional to Application Number	:NA
Filing Date	:NA

(71)**Name of Applicant :**
1)Karande Piyush Naresh (Final Year B-Tech (Electrical Engineering)
Address of Applicant :Arvind Gavali College of Engineering, Satara, MH, India. Sponsoring Firm: Siddheshwar Electricals Address of the Firm: Rajgurunagar, Sangam Mahuli Phata, Satara-415003, MH, India. Email id: piyushkarande825@gmail.com, piyushkarande70@gmail.com Maharashtra India
2)Karande Rupali Naresh (Owner of Siddheshwar Electricals)
3)Karande Naresh Uttam (Employee at MSEDCL ,Maharashtra state electricity distribution corporation limited)
4)Karande Ayush Naresh (Employee at Siddheshwar Electricals)
(72)**Name of Inventor :**
1)Karande Piyush Naresh (Final Year B-Tech (Electrical Engineering)
2)Karande Rupali Naresh (Owner of Siddheshwar Electricals)
3)Karande Naresh Uttam (Employee at MSEDCL ,Maharashtra state electricity distribution corporation limited)
4)Karande Ayush Naresh (Employee at Siddheshwar Electricals)

(57) Abstract :
ABSTRACT Battery Electrolyte filling it is very difficult task for everyone therefore these work of the human being we will carried out by the automated machine these machine fills battery Electrolyte with very minimal wastage , without spilling and Fill Right Amount Of Requires Quantity Based On the Age Of The Battery It will calculate required Amount Of electrolyte And Fill In the battery Cell and This Machine Is Portable Also using Of This Machine Will Reduce Risks Of sever Back Pain , Skin Cancer(because of hand does not come in contact in battery Electrolyte), Sever lung Problems Cause due to fumes goes in our nose and directly contact with our lungs, it will works on the battery power 24v dc as well as on the electricity of 230 v ac this machine has automatic changeover switch so any type of power we will connect to it and machine senses the supply and modify it™s circuit on its own we do not require to change anything machine will works on its own and Electrolyte filling is based on the battery age machine will.

No. of Pages : 14 No. of Claims : 6

(12) PATENT APPLICATION PUBLICATION
(21) Application No.202121024034 A
(19) INDIA
(22) Date of filing of Application :29/05/2021
(43) Publication Date : 02/07/2021

(54) Title of the invention : AN APPARATUS FOR RECHARGING AN AQUIFER

(51) International classification	:E03B0003340000, E21B0043080000, B07B0001460000, E03B0003120000, B09C0001000000	(71)**Name of Applicant :** **1)KATPATAL, Yashwant Bhasker** Address of Applicant :Professor Department of Civil Engineering Visvesvaraya national Institute of Technology, Nagpur India 440010 Maharashtra India **2)THAKRE, Priyanka**
(31) Priority Document No	:NA	(72)**Name of Inventor :**
(32) Priority Date	:NA	**1)KATPATAL, Yashwant Bhasker**
(33) Name of priority country	:NA	**2)THAKRE, Priyanka**
(86) International Application No	:NA	
Filing Date	:NA	
(87) International Publication No	: NA	
(61) Patent of Addition to Application Number	:NA	
Filing Date	:NA	
(62) Divisional to Application Number	:NA	
Filing Date	:NA	

(57) Abstract :
ABSTRACT AN APPARATUS FOR RECHARGING AN AQUIFER The present invention relates to an apparatus for recharging an aquifer. The object of the proposed invention is to provide an apparatus which can be utilized for recharge of groundwater.The proposed invention provides an instrument which can attach to the periphery of the already available discharge or extraction well.The filter is divided into three different compartments [102, 103 and 104] such as gravel, fine gravel and coarse sand. One end of the whole apparatus is provide with two collecting inlet pipes [100 and 101] to collect the incoming runoff while at the other end two outlet pipes [106] are provided into the recharge wells. Following invention is described in detail with the help of figure 1 of sheet 1 showing an isometric view of apparatus for recharge. Fig 1.

No. of Pages : 14 No. of Claims : 5

(12) PATENT APPLICATION PUBLICATION
(19) INDIA
(22) Date of filing of Application :30/05/2021
(21) Application No.202121024059 A
(43) Publication Date : 02/07/2021

(54) Title of the invention : INTELLIGENT WAY TO PRODUCE THE NICOTINIC ACID FROM TOBACCO WASTE

(51) International classification	:A61K0031455000, A24B0015240000, B01D0053560000, C07D0213800000, A24B0003140000
(31) Priority Document No	:NA
(32) Priority Date	:NA
(33) Name of priority country	:NA
(86) International Application No	:NA
Filing Date	:NA
(87) International Publication No	: NA
(61) Patent of Addition to Application Number	:NA
Filing Date	:NA
(62) Divisional to Application Number	:NA
Filing Date	:NA

(71)**Name of Applicant :**
1)Ganesh Balasaheb Nigade
Address of Applicant :A/P: - Gulunche, Tal: - Purandar, Dist: - Pune, Maharashtra, Pin no. 412102 E mail: ganeshpharma2984@gmail.com Phone : 9960743549 Maharashtra India
2)Pradip Madanrao Chavan
3)Meenakshi Nitin Deodhar
4)Somdatta Yashwant Chaudhari
5)Shriram Hiradas Bairagi
6)Jayshri Hiradas Bairagi
(72)**Name of Inventor :**
1)Ganesh Balasaheb Nigade
2)Pradip Madanrao Chavan
3)Meenakshi Nitin Deodhar
4)Somdatta Yashwant Chaudhari
5)Shriram Hiradas Bairagi
6)Jayshri Hiradas Bairagi

(57) Abstract :
Patent Title: Intelligent way to Produce the Nicotinic Acid from Tobacco Waste Abstract Our Invention is to an Intelligent way to Produce the Nicotinic Acid from Tobacco Waste is a method for extracting nicotine acid from any level of tobacco wastes and comprises the following stage of adding an alkaline ion high-density liquid salt solution and the tobacco waste into a synthetic extractor to extract at advanced pressure. The invention is also maintaining the temperature is 52-Deg. to 69-Deg. and the extraction time is 24 to 34min, so as to obtain the nicotine the alkaline ion liquid high density of the salt solution is prepared from alkaline ion liquid and potassium acetate other things added. The method and process for extracting the nicotine from all types of tobacco wastes have the user that the efficiency of extracting the nicotine from the tobacco wastes is greatly increased and also the application production of the nicotine is required and the quality of tobacco sheets is increased. The Invention is another application is to high density nicotinic acid is used to prevent/ Protect and treat niacin deficiency and the Niacin deficiency may result from certain medical conditions (such as alcohol abuse, malabsorption syndrome, Hard-up disease), poor diet, or long-term use of certain medications (such as isoniazid).

No. of Pages : 15 No. of Claims : 5

(12) PATENT APPLICATION PUBLICATION
(21) Application No.202121024060 A
(19) INDIA
(22) Date of filing of Application :30/05/2021
(43) Publication Date : 02/07/2021

(54) Title of the invention : ANALYSIS OF THE PERFORMANCE OF DSDV ROUTING PROTOCOL IN AD HOC WIRELESS NETWORKS.

(51) International classification	:H04W0084180000, H04W0040240000, H04W0040020000, H04W0052020000, H04L0012705000	(71)**Name of Applicant :** **1)Dr. Sanjeev Kumar Srivastava** Address of Applicant :8-C, Darbari, Anushaktinagar, Mumbai-400094, MH, India. Maharashtra India (72)**Name of Inventor :** **1)Dr. Sanjeev Kumar Srivastava**
(31) Priority Document No	:NA	
(32) Priority Date	:NA	
(33) Name of priority country	:NA	
(86) International Application No	:NA	
Filing Date	:NA	
(87) International Publication No	: NA	
(61) Patent of Addition to Application Number	:NA	
Filing Date	:NA	
(62) Divisional to Application Number	:NA	
Filing Date	:NA	

(57) Abstract :
ABSTRACT Our Invention Analysis of the performance of DSDV routing protocol in ad hoc wireless networks is a ad-hoc wireless network is self-organizing & adaptive. Ad hoc nodes or devices should be able to detect the presence of other such devices & to perform the necessary handshaking for allowing communications. The diversity of the ad-hoc mobile device implies that battery capacity of such devices will also vary. Since ad hoc networks rely on forwarding data packets sent by other nodes, power consumption becomes the critical issue. In this proposed idea, it has been discussed the general way to design a routing protocol in ad-hoc wireless network. The invention is a bandwidth efficient routing protocol for wireless ad-hoc networks and also a protocol can be used in ad-hoc networks because it considerably reduces control overhead thus increasing available bandwidth and conserving power at mobile stations. The invention is also a gives very good results in terms of the throughput seen by the user and the protocol is a table-driven distance-vector routing protocol that uses the same constraints used in on-demand routing protocols, i.e., paths are used as long as they are valid and updates are only sent when a path becomes invalid. The invented paths used by neighbors are maintained and this allows the design of a distance-vector protocol with non-optimum routing and event-driven updates, resulting in reduced control overhead.

No. of Pages : 15 No. of Claims : 6

(12) PATENT APPLICATION PUBLICATION
(21) Application No.202121024061 A
(19) INDIA
(22) Date of filing of Application :30/05/2021
(43) Publication Date : 02/07/2021

(54) Title of the invention : RAILWAY PLATFORM CROSSING AUTOMATIC BRIDGE

(51) International classification	:B61B0001020000, E01F0001000000, B66F0007080000, B61D0047000000, B61L0023000000	(71)**Name of Applicant :** **1)Dr. Rachana Yogesh Patil** Address of Applicant :A-302, Yash Avenue, Plot No-5 1/C, Sect-20, Kharghar, Navi Mumbai Maharashtra India **2)Yogesh H. Patil**
(31) Priority Document No	:NA	(72)**Name of Inventor :**
(32) Priority Date	:NA	**1)Dr. Rachana Yogesh Patil**
(33) Name of priority country	:NA	**2)Yogesh H. Patil**
(86) International Application No	:NA	
Filing Date	:NA	
(87) International Publication No	: NA	
(61) Patent of Addition to Application Number	:NA	
Filing Date	:NA	
(62) Divisional to Application Number	:NA	
Filing Date	:NA	

(57) Abstract :
The present invention relates to the system of Railway platform crossing automatic bridge (205) to connect two opposite platforms (210). In this, a pair of double acting hydraulically/ pneumatically operated telescopic cylinder (203) is used to make movements of fabricated metal frame bridge (205). When train leaves the station, the bridge gets connected to opposite platform and the travelers can cross the railway track by walking on it. The Programmable Logic Controller (101) works in synchronization with the train traffic signaling system (104) and all the position sensors, alarms, audio-visual indicators. All the safety interlocks are achieved with position sensors, safety barricades, emergency alarms, and audio-visual information system to avoid any accidental event. The said automatic bridge (205) provides an ease to physically handicapped, person with heavy luggage, pregnant women, elderly people to cross the platform and regulates the passenger traffic after train departs the station.

No. of Pages : 29 No. of Claims : 8

(12) PATENT APPLICATION PUBLICATION
(21) Application No.202121024080 A
(19) INDIA
(22) Date of filing of Application :30/05/2021
(43) Publication Date : 02/07/2021

(54) Title of the invention : AN APPARATUS FOR A PREDETERMINED LANGUAGE TRANSLITERATION AND METHOD THEREOF

(51) International classification	:G06N0003040000, G06N0003080000, G06F0040400000, G06K0009340000, G06K0009320000
(31) Priority Document No	:NA
(32) Priority Date	:NA
(33) Name of priority country	:NA
(86) International Application No	:NA
Filing Date	:NA
(87) International Publication No	: NA
(61) Patent of Addition to Application Number	:NA
Filing Date	:NA
(62) Divisional to Application Number	:NA
Filing Date	:NA

(71)**Name of Applicant :**
1)Solley Joseph
Address of Applicant :Associate Professor, Carmel College of Arts, Science and Commerce for Women. Research Scholar, CHRIST (Deemed to be University), India Goa India
2)Dr.(Fr.) Jossy P. George
3)Dr. Samiksha Shukla
(72)**Name of Inventor :**
1)Solley Joseph
2)Dr.(Fr.) Jossy P. George
3)Dr. Samiksha Shukla

(57) Abstract :
ABSTRACT AN APPARATUS FOR A PREDETERMINED LANGUAGE TRANSLITERATION AND METHOD THEREOF
[053] The present invention discloses an apparatus for a predetermined language transliteration and method thereof. The system includes, but not limited to, a processing unit with one or more processors connected with one or more storage devices, and wherein the processing unit is to: acquire scripts or alphabets of the predetermined language through an OCR scanning unit or through any input device; pre-process input scripts for performing the steps such as noise reduction, skew detection and correction and the like; perform the annotation of the input scripts or alphabets of the predetermined language with storing these annotation in the storage devices; training and test the input data set, which is stored in the storage devices and performing the segmentation of the input data; process the input data by implementing a Deep Learning based method for character recognition and (CRNN - Convolutional Recurrent Neural Network) based modules. Accompanied Drawing [FIG. 1]

No. of Pages : 24 No. of Claims : 10

(12) PATENT APPLICATION PUBLICATION
(21) Application No.202041022403 A
(19) INDIA
(22) Date of filing of Application :28/05/2020
(43) Publication Date : 02/07/2021

(54) Title of the invention : WHOLE CELL METHANOTROPH BASED BIOSTIMULANT COMPOSITIONS, METHODS AND APPLICATIONS THEREOF

(51) International classification	:C12N0001200000, C05F0011080000, C05C0001020000, C05C0001000000, G01N0033543000
(31) Priority Document No	:NA
(32) Priority Date	:NA
(33) Name of priority country	:NA
(86) International Application No	:NA
Filing Date	:NA
(87) International Publication No	: NA
(61) Patent of Addition to Application Number	:NA
Filing Date	:NA
(62) Divisional to Application Number	:NA
Filing Date	:NA

(71)**Name of Applicant :**
1)STRING BIO PRIVATE LIMITED
Address of Applicant :No. 456G, 1st Main Road, Vinayaka Nagar Opposite Kenna Metal Widia 9th Mile Tumkur Road Nagasandra, Bangalore 560073, Karnataka India. Karnataka India
(72)**Name of Inventor :**
1)RAJEEV KUMAR SARMA
2)DR UDAY KASHINATH AVALAKKI
3)RAVINDRA BABU BONDALAKUNTA
4)PRASHANTH MURALIDHAR UDAGATTI
5)VINOD MUNISANJEEVAIAH LAKSHMI DEVI KUMAR
6)EZHILKANI SUBBIAN

(57) Abstract :
The disclosure relates to whole cell based biostimulant compositions and methods for improving agricultural productivity. In particular, the compositions disclosed herein comprise a microbial consortium having gammaproteobacterial methanotroph. As a result of these methanotrophs, the biostimulant composition enables plant performance improvement, utilization of methane, and facilitates improved nitrogen fixation in plants. The composition also helps in reducing the need of external chemical fertilizers for plant growth, development, performance and/or survival.

No. of Pages : 88 No. of Claims : 35

(12) PATENT APPLICATION PUBLICATION
(21) Application No.202041022410 A
(19) INDIA
(22) Date of filing of Application :28/05/2020
(43) Publication Date : 02/07/2021

(54) Title of the invention : HYDROLYSATE BASED BIOSTIMULANT COMPOSITIONS DERIVED FROM METHANOTROPH, METHODS, AND APPLICATIONS THEREOF

(51) International classification	:A01N0063020000, A61K0008920000, G06Q0010080000, C05G0003000000, C12N0015520000
(31) Priority Document No	:NA
(32) Priority Date	:NA
(33) Name of priority country	:NA
(86) International Application No	:NA
Filing Date	:NA
(87) International Publication No	: NA
(61) Patent of Addition to Application Number	:NA
Filing Date	:NA
(62) Divisional to Application Number	:NA
Filing Date	:NA

(71)**Name of Applicant :**
1)STRING BIO PRIVATE LIMITED
Address of Applicant :No. 456 G, 1st Main Road, Vinayaka Nagar, Opposite Kennametal Widia, 9th Mile, Tumkur Road, Nagasandra, Bangalore 560073, Karnataka, India. Karnataka India
(72)**Name of Inventor :**
1)RAJEEV KUMAR SARMA
2)DR UDAY KASHINATH AVALAKKI
3)RAVINDRA BABU BONDALAKUNTA
4)PRASHANTH MURALIDHAR UDAGATTI
5)VINOD MUNISANJEEVAIAH LAKSHMI DEVI KUMAR
6)EZHILKANI SUBBIAN

(57) Abstract :
HYDROLYSATE BASED BIOSTIMULANT COMPOSITIONS DERIVED FROM METHANOTROPH, METHODS, AND APPLICATIONS THEREOF • ABSTRACT The present disclosure relates to protein hydrolysate based biostimulant composition derived from methanotrophic bacteria, and methods for enhancing agricultural productivity. In particular, the compositions disclosed herein comprise a protein-derived component in an amount of about 30% or less with respect to weight of the composition, wherein said protein-derived component is obtained from a methanotrophic bacterium. The present biostimulant composition finds applications in methods for improving plant performance along with methods for reducing the need of external chemical fertilizer-based inputs for plant growth.

No. of Pages : 82 No. of Claims : 39

(12) PATENT APPLICATION PUBLICATION
(21) Application No.202041027167 A
(19) INDIA
(22) Date of filing of Application :26/06/2020
(43) Publication Date : 02/07/2021

(54) Title of the invention : HERBAL OIL BASED HAND SANITIZER

(51) International classification	:A61K0008920000, A61Q0019100000, A61Q0017000000, A01N0025040000, A61K0008460000
(31) Priority Document No	:NA
(32) Priority Date	:NA
(33) Name of priority country	:NA
(86) International Application No	:NA
Filing Date	:NA
(87) International Publication No	: NA
(61) Patent of Addition to Application Number	:NA
Filing Date	:NA
(62) Divisional to Application Number	:NA
Filing Date	:NA

(71)**Name of Applicant :**
1)G.Gopalakrishnan
Address of Applicant :# 221/66-B, Sengaluneerodai Street, Kanchipuram Tamil Nadu India
(72)**Name of Inventor :**
1)G.Gopalakrishnan

(57) Abstract :
HERBAL OIL BASED HAND SANITIZER The present invention relates to low cost herbal oil based hand sanitizer. The herbal oil based hand sanitizer is alcohol free and non-flammable. The herbal oil based hand sanitizer, comprising of: Panchagavya-10-37ml; neem oil-24-38ml; turmeric oil-24-37ml; sandal oil-10-16ml; and sticking agent-3-16ml. The herbal oil based hand sanitizer is non-toxic and does not evaporate in air and sunlight. The herbal oil based hand sanitizer protects human hands from virus infection for one hour when applied. Advantageously, the herbal oil based hand sanitizer performs better than using water and soap to reduce chemical contamination in human hand and hence reduces the chance of microbial transmission when used.

No. of Pages : 17 No. of Claims : 4

(12) PATENT APPLICATION PUBLICATION
(19) INDIA
(22) Date of filing of Application :26/06/2020
(21) Application No.202041027285 A
(43) Publication Date : 02/07/2021

(54) Title of the invention : UVC BASED INSTRUMENT CABINET AND DISPOSABLE BINS

(51) International classification	:A61L0002180000, A61L0002000000, A61L0002080000, A61L0011000000, H04R0025000000	(71)**Name of Applicant :** **1)Dr. R Naresh Kumar** Address of Applicant :3B, Lakshmi Street, Thirumangalam Road, Villivakkam, Chennai Tamil Nadu India (72)**Name of Inventor :** **1)Dr. R Naresh Kumar**
(31) Priority Document No	:NA	
(32) Priority Date	:NA	
(33) Name of priority country	:NA	
(86) International Application No	:NA	
Filing Date	:NA	
(87) International Publication No	: NA	
(61) Patent of Addition to Application Number	:NA	
Filing Date	:NA	
(62) Divisional to Application Number	:NA	
Filing Date	:NA	

(57) Abstract :
The present disclosure relates to an instrument cabinet for sterilizing and sanitation. More precisely, the present invention relates to sterilizing and disinfecting object by placing it in the UVC sterilization cabinet. The instrument of the present invention sterilizes the surface of the object by irradiating far UVC rays on it. Thus, the instrument of the present invention can be used for sterilization of even personal items such as jewels, watches, etc. without any expert guidance.

No. of Pages : 7 No. of Claims : 4

(12) PATENT APPLICATION PUBLICATION
(19) INDIA
(22) Date of filing of Application :12/01/2021
(21) Application No.202141001345 A
(43) Publication Date : 02/07/2021

(54) Title of the invention : HIGH-END MINUTIAE-BASED SECURING SYSTEM

(51) International classification	:G06K0009000000, H04L0009320000, G06F0021300000, G07C0009370000, G07C0009250000
(31) Priority Document No	:NA
(32) Priority Date	:NA
(33) Name of priority country	:NA
(86) International Application No	:NA
Filing Date	:NA
(87) International Publication No	: NA
(61) Patent of Addition to Application Number	:NA
Filing Date	:NA
(62) Divisional to Application Number	:NA
Filing Date	:NA

(71)**Name of Applicant :**
1)Dr.A.MUMMOORTHY
Address of Applicant :ASSOCIATE PROFESSOR, DEPARTMENT OF INFORMATION TECHNOLOGY, MALLA REDDY COLLEGE OF ENGINEERING & TECHNOLOGY, MAISAMMAGUDA, DHULAPALLY, SECUNDERABAD-500 100. Telangana India
2)Dr.N.S.GOWRI GANESH
3)Dr.R.ROOPA CHANDRIKA
4)Dr.KARTHIK RAGUNATH K.M
5)Dr.A.SARASWATHI
(72)**Name of Inventor :**
1)Mrs.E.PAVITHRA
2)Mr.E.SANKAR SENGOTTAIYAN

(57) Abstract :
ABSTRACT OF THE INVENTION Previously, for providing high security in any system, some normal encrypted techniques are utilized. However, these systems were found to be not efficient and perfectly secure. Moreover, the passwords- needed to be changed regularly, and are weak in the authentication. The purpose of this invention is to provide a high-security system. The aim of this study is to design a smart face recognition access system using human face recognition. The use of this technique is to provide access to only authorized persons. Both hardware and software technology is employed in designing process. An emergency honk is provided as a warning, whenever any unauthorized person intrudes into the system and this condition is specified as a critical condition of the system. During the critical condition, as a contingency plan, the information of the system is hidden on utilizing the same recognition secure concept as a security measure

No. of Pages : 5 No. of Claims : 3

(12) PATENT APPLICATION PUBLICATION
(21) Application No.202141015717 A
(19) INDIA
(22) Date of filing of Application :01/04/2021
(43) Publication Date : 02/07/2021

(54) Title of the invention : MULTI-PURPOSE NON-TOUCH DEVICE FOR AVOIDING A PHYSICAL CONTACT OF A USER WITH A SURFACE

(51) International classification	:G01K0001020000, G06K0009000000, H04B0013000000, G01B0005000000, H01B0007000000
(31) Priority Document No	:NA
(32) Priority Date	:NA
(33) Name of priority country	:NA
(86) International Application No	:NA
Filing Date	:NA
(87) International Publication No	: NA
(61) Patent of Addition to Application Number	:NA
Filing Date	:NA
(62) Divisional to Application Number	:NA
Filing Date	:NA

(71)**Name of Applicant :**
1)VELLORE INSTITUTE OF TECHNOLOGY
Address of Applicant :VIT UNIVERSITY, KATPADI, VELLORE-632014, TAMILNADU, INDIA. Tamil Nadu India
(72)**Name of Inventor :**
1)Dr. Akash Mohanty
2)Dr. U. Rahamathunnisa

(57) Abstract :
MULTI-PURPOSE NON-TOUCH DEVICE FOR AVOIDING A PHYSICAL CONTACT OF A USER WITH A SURFACE A multi-purpose non-touch device 100 for avoiding a physical contact of a user with a surface is provided. The multi-purpose non-touch device 100 includes a copper square wire 102. The copper square wire 102 includes a flat portion 104 at one end and a hook portion 110 at another end. The flat portion 104 is configured to perform a function of a fingertip. The flat portion 104 includes a flat round face 106 and a horizontal portion 108. The flat round face 106 is configured to provide an enlarged area for touching the surface. The horizontal portion 108 is configured to provide adequate space to hold the multi-purpose non-touch device 100 by the user in between the fingers. The hook portion 110 is configured for holding a protruded part and attach to one or more devices to open the one or more devices that require full palm and finger support to open it. FIG. 1

No. of Pages : 18 No. of Claims : 10

(12) PATENT APPLICATION PUBLICATION
(19) INDIA
(22) Date of filing of Application :07/04/2021
(21) Application No.202141016471 A
(43) Publication Date : 02/07/2021

(54) Title of the invention : SYSTEM, METHOD, PROCESS AND DEVICE FORIMMERSIVE MOTION MOVIE EXPERIENCE

(51) International classification	:G03B0021560000, A63J0025000000, G06T0013400000, E04H0003220000, A63G0031160000
(31) Priority Document No	:NA
(32) Priority Date	:NA
(33) Name of priority country	:NA
(86) International Application No	:NA
Filing Date	:NA
(87) International Publication No	: NA
(61) Patent of Addition to Application Number	:NA
Filing Date	:NA
(62) Divisional to Application Number	:NA
Filing Date	:NA

(71)**Name of Applicant :**
1)M. GOURI SHANKAR
Address of Applicant :FLAT NO 615, VARUNA BLOCK, MYHOME NAVADWEEPA, PATRIKANAGAR, HITECH CITY, HYDERABAD 500081, INDIA. Telangana India
(72)**Name of Inventor :**
1)M. GOURI SHANKAR

(57) Abstract :
Abstract SYSTEM, METHOD, PROCESS AND DEVICE FOR IMMERSIVE SPATIAL ARCHITECTURE, IMMERSIVE MOTION MOVIE/ TV STUDIO PRODUCTION AND IMMERSIVE INDOOR-OUTDOOR THEATERS, 360°RECORDED AND LIVE STREAMING [000251] The present invention generally relates to the field of real-time immersive movie and CGI (Computer Graphics Imagery) experience. More Particularly, the invention relates to a system, method, process and device for Augmented Reality /Virtual Reality /Augmented Virtual Reality/ Extended Reality Spatial Architecture; Augmented Reality /Virtual Reality /Augmented Virtual Reality Immersive Motion Movie / Television Studio Production and Augmented Reality /Virtual Reality /Augmented Virtual Reality/ Extended Reality Theaters; Augmented Reality /Virtual Reality /Augmented Virtual Reality/ Recorded and Live Streaming. The various embodiments of the invention provide capturing the live characters and virtual content together at the same time or live characters and Computer Graphic Imagery (CGI) together, which contributes to video games, simulators, animation VFX films and commercials. Further, it provides a headset display played back in specially designed CYMAX Theater where one or more audience can sit on a CYMAX Simulated Chair wearing specially designed CYMAX Extended Reality Headset and get the immersive experience of the movie watching the live characters and the digital CGI environment in an immersive 360°environment. The whole system is a unique integrated technology interlinked from production to display of the movie.

No. of Pages : 85 No. of Claims : 14

(12) PATENT APPLICATION PUBLICATION
(21) Application No.202141017013 A
(19) INDIA
(22) Date of filing of Application :12/04/2021
(43) Publication Date : 02/07/2021

(54) Title of the invention : ADVANCED SAFETY SURVEILLANCE SYSTEM FOR INDIAN RAILWAY

(51) International classification	:G08B0025010000, G08B0027000000, B61L0029280000, B25J0019020000, B61L0025020000	(71)**Name of Applicant :** **1)Yeshashwini.B.A** Address of Applicant :04, Kuvempunagarmadanayakanahalli, Bangalore, Karnataka, India 562162. Karnataka India **2)Durga Lakshmi.M**
(31) Priority Document No	:NA	**3)Monisha K**
(32) Priority Date	:NA	**4)Moumita Ruj**
(33) Name of priority country	:NA	**5)Anilkumar C.S**
(86) International Application No	:NA	(72)**Name of Inventor :**
Filing Date	:NA	**1)Yeshashwini.B.A**
(87) International Publication No	: NA	**2)Durga Lakshmi.M**
(61) Patent of Addition to Application Number	:NA	**3)Monisha K**
Filing Date	:NA	**4)Moumita Ruj**
(62) Divisional to Application Number	:NA	**5)Anilkumar C.S**
Filing Date	:NA	

(57) Abstract :
ABSTRACT: Railroads give the least expensive and most helpful method to travel and goods transportation for both short and long distance. Still mishaps are the significant worry as due to railroad track crossing, unidentified crack in rail tracks and due to the fire accidents in Indian railroad. About 60% accidents are happening at railroad track crossing and due to crack in railroad tracks,bringing loss of valuable life and loss of economy. So, there js need for an innovation which is robust, proficient and stable for crack discovery in railroad track. In the proposed system, a robot is developed that automatically navigates using the L293D motor driverand detects the railroad crevices.The systemautomatically detects the crack using IR sensor attached to the robot, which will continuously monitor thecrack. If a crack is detected, the IR sensor will send a signal to the Raspberry pi which will activate the GPS receiver. The GPS receiver will trace the exact location and trigger a message to the concerned personthrough GSM module.Furthermore, it will initiate the webcam which will provide the live feed of the track.In case the robot detects any object using ultrasonic sensors the warning message will be sent with the location to take the further action and Vibration sensor is used to detect vibrations of the upcoming train.There are several fire related fatalities that are caused due to lack of safety measures in train.In response to this, if any fire accident occurs in train it sends an alert message to the concerned authority with the exact location of the accident and a loud alarm sound to the passengers to save their lives.The golden-ager or the convalescent people are scared to travel in trains due to the lack of the health care system in trains so keeping this in mind if there is any health emergency in the train a switch will be provided in every compartment on pressing it a message will be triggered to the concerned authority to keep an ambulance ready at the next station and also an announcement will be made if there are any doctors present in the train to provide the medical treatment to the needy.This smart technology will be a part of the new digitalized world which will be able to prevent the loss . of precious life or property. So above idea is accomplished by our prime minister sir Digital India concept.

No. of Pages : 10 No. of Claims : 5

(12) PATENT APPLICATION PUBLICATION
(21) Application No.202141017620 A
(19) INDIA
(22) Date of filing of Application :15/04/2021
(43) Publication Date : 02/07/2021

(54) Title of the invention : MODULAR FILTRATION SYSTEM FOR HARVESTING PURE RAINWATER

(51) International classification	:E03B0003020000, C02F0001000000, C02F0009000000, C02F0103000000, C02F0001440000	(71)**Name of Applicant :** **1)VELLORE INSTITUTE OF TECHNOLOGY** Address of Applicant :KATPADI, VELLORE-632014, TAMIL NADU, INDIA Tamil Nadu India
(31) Priority Document No	:NA	(72)**Name of Inventor :**
(32) Priority Date	:NA	**1)Sejal Budholiya**
(33) Name of priority country	:NA	**2)Aayush Bhat**
(86) International Application No	:NA	**3)Anubhav Anurag**
Filing Date	:NA	**4)Dr.S.Aravind Raj**
(87) International Publication No	: NA	
(61) Patent of Addition to Application Number	:NA	
Filing Date	:NA	
(62) Divisional to Application Number	:NA	
Filing Date	:NA	

(57) Abstract :
MODULAR FILTRATION SYSTEM FOR HARVESTING PURE RAINWATER The embodiments herein relate to a modular filtration system 100 for harvesting pure rainwater that can be fixed on any structural area. The modular filtration system 100 includes a membrane surface 102 and a purification unit 104. The membrane surface 102 acts as a catchment area for collecting rainwater. The purification unit 104 receives the collected rainwater from the membrane surface 102. The purification unit 104 includes one or more filter membranes 204A-N in a holding space of one or more drawers 202A-N. The one or more filter membranes 204A-N allows the collected rainwater to pass from a top drawer 202A to a low drawer 202N to purify the collected rainwater that prevents filterant from the collected rainwater to obtain the pure rainwater. FIG. 1

No. of Pages : 23 No. of Claims : 9

(12) PATENT APPLICATION PUBLICATION
(21) Application No.202141020985 A
(19) INDIA
(22) Date of filing of Application :09/05/2021
(43) Publication Date : 02/07/2021

(54) Title of the invention : A Novel Design Method of Compact Two-Element MIMO Patch Antenna at sub 6-GHz band for 5G Applications

(51) International classification	:H01Q0009040000, H01Q0021280000, H01Q0001380000, H01Q0001360000, H01Q0015140000
(31) Priority Document No	:NA
(32) Priority Date	:NA
(33) Name of priority country	:NA
(86) International Application No	:PCT//
Filing Date	:01/01/1900
(87) International Publication No	: NA
(61) Patent of Addition to Application Number	:NA
Filing Date	:NA
(62) Divisional to Application Number	:NA
Filing Date	:NA

(71)**Name of Applicant :**
1)Mrs.Gorre Naga Jyothi Sree
Address of Applicant :Research Scholar, Department of ECE, Vignan's Foundation for Science, Technology & Research (Deemed to be University), Vadlamudi, Andhra Pradesh, India. Pin Code:522213 Andhra Pradesh India
2)Dr.Suman Nelaturi
3)Prof. N V S N Sarma
(72)**Name of Inventor :**
1)Mrs.Gorre Naga Jyothi Sree
2)Dr.Suman Nelaturi
3)Prof. N V S N Sarma

(57) Abstract :
With the development of Wireless Communication Technology, 5G will develop into a new generation of Wireless Mobile Communication Systems. The performance of the Wireless Communication System can be improved with the use of Multiple Input Multiple Output (MIMO) in which multiple antennas were used which is the key technology in the field of 5G wireless communications. The present invention disclosed herein is a Novel Design Method of Compact Two-Element MIMO Patch Antenna at sub 6-GHz band for 5G Applications comprising of: Ground Plane; Substrate; height h; Patch; Length L; Width W; and Feed; provides all the dimensions of the antenna for its compact design for 5G Applications. For the realization of polarization diversity, the two elements of the array are oriented one opposite to other which is the novelty of the structure designed in the present invention disclosed. Due to this choice, the added advantage is that the antenna elements could be placed by 3mm distance of separation with a patch size of 45x24 mm2 yielding good compactness. The current design shows S11 ‰ -10dB and isolation better than -20dB at the resonating frequency. Due to use of monopole ground plane structure, a very broad band impedance bandwidth is achieved at the resonant frequency of 3.5GHz for the proposed structure disclosed herein. The simulated results shows that proposed MIMO antenna has improved performance in the parameters like diversity gain, mean effective gain, channel capacity loss, total active reflection coefficient and envelope correlation coefficient compared with the existing invention.

No. of Pages : 20 No. of Claims : 10

(12) PATENT APPLICATION PUBLICATION
(21) Application No.202141021923 A
(19) INDIA
(22) Date of filing of Application :15/05/2021
(43) Publication Date : 02/07/2021

(54) Title of the invention : OPTIMAL AND DETERMINISTIC IDENTIFICATION OF CLOUD INFRASTRUCTURE MODULES FOR ENSURING HIGH AVAILABILITY OF MICRO SERVICES SYSTEM

(51) International classification	:G06Q0010060000, G06F0009500000, C08L0075040000, A61K0047140000, G06F0011000000
(31) Priority Document No	:NA
(32) Priority Date	:NA
(33) Name of priority country	:NA
(86) International Application No	:PCT//
Filing Date	:01/01/1900
(87) International Publication No	: NA
(61) Patent of Addition to Application Number	:NA
Filing Date	:NA
(62) Divisional to Application Number	:NA
Filing Date	:NA

(71)**Name of Applicant :**
1)PROF.U.MOULALI
Address of Applicant :Associate Professor- CSE Dept LORD Institute of Engineering and Technology Hyderabad Telanagana India 500 091 Telangana India
2)Ms. ASHLESHA KOLARKAR
3)Mr. D.VENKATESH
4)Mrs.K.SRIVIDYA
5)Mrs.NAMANI DEEPIKA RANI
6)Mrs.VASUDA.G
7)Mr. SYED AHMEDUDDIN
8)Mrs.D.DHANALAKHSMI
(72)**Name of Inventor :**
1)PROF.U.MOULALI
2)Ms. ASHLESHA KOLARKAR
3)Mr. D.VENKATESH
4)Mrs.K.SRIVIDYA
5)Mrs.NAMANI DEEPIKA RANI
6)Mrs.VASUDA.G
7)Mr. SYED AHMEDUDDIN
8)Mrs.D.DHANALAKHSMI

(57) Abstract :
A unique and robust technique for accomplishing the required Quality of Service for a microservices based process by appropriately identifying the optimaly non-functional attributes that should be met by the microservices participating in the concerned process so as to ensure reliable environment, more particularly to a robust methodology and system for the segmentation of the process into plurality of independent clustered microservices and in estimating the system organization for achieving the successful accomplishment of the process, involves the tasks from receiving a query of overall QoS demand in terms of various non-functional attributes from the end user to optimize the non-functional attributes for providing a service having the pre-determined requirements; segmenting the entire process the overall QoS in terms of non-functional attributes, say, availability into individual availability of plurality of independent, but clustered microservices by analyzing the pattern of workflow of the process and identifying individual non-functional attributes(availability) of microservices participating in the workflow; and finally from the estimated availability of the individual microservices configuring automatically and dynamically the non-functional requirements of the system by correspondingly allocating and adjusting the scalability factor.

No. of Pages : 19 No. of Claims : 9

(12) PATENT APPLICATION PUBLICATION
(19) INDIA
(22) Date of filing of Application :15/05/2021
(21) Application No.202141021959 A
(43) Publication Date : 02/07/2021

(54) Title of the invention : Human Activity Recognition using Spiking Neural Network

(51) International classification	:G06N0003040000, G06K0009000000, G06N0003080000, G06K0009620000, G06N0020000000
(31) Priority Document No	:NA
(32) Priority Date	:NA
(33) Name of priority country	:NA
(86) International Application No	:PCT//
Filing Date	:01/01/1900
(87) International Publication No	: NA
(61) Patent of Addition to Application Number	:NA
Filing Date	:NA
(62) Divisional to Application Number	:NA
Filing Date	:NA

(71)**Name of Applicant :**
1)Kakirala Durga Bhavani
Address of Applicant :Research scholar ,PhD, Department of Computer Science and Engineering , SRMIST 603203 Tamil Nadu India
2)Mr. V.C.Eugin Martin Raj
3)SAI GEETHA LAKSHMI VALLURU
4)PAWAN KUMAR GOEL
5)Mr. Mahendra Pratap Swain
6)Mrs.S.SS.SINDHU
7)Mr.M.Kumaresan
8)Mohamed Ibrahim A
9)Dr. C. Balaji
10)Dr. H. Kanagasabapathy
(72)**Name of Inventor :**
1)Kakirala Durga Bhavani
2)Mr. V.C.Eugin Martin Raj
3)SAI GEETHA LAKSHMI VALLURU
4)PAWAN KUMAR GOEL
5)Mr. Mahendra Pratap Swain
6)Mrs.S.SS.SINDHU
7)Mr.M.Kumaresan
8)Mohamed Ibrahim A
9)Dr. C. Balaji
10)Dr. H. Kanagasabapathy

(57) Abstract :

Abstract: Human Activity Recognition using Spiking Neural Network In real-time, understanding human behaviour is to understand human motion in real-time based on skeleton movement, which is often a difficult challenge. This discovery proposes a new approach employing the Spiking Neural Network [SNN], a biological neural network coping with precise time spikes, for completing classification. The first is to encrypt the data capture in a sequence of spikes using a modern temporary encoding system, and the motion form is expressed in a spike period. Secondly, via gradient descent learning algorithms, a 2-layer pinion-neural network is initiated and trained.

No. of Pages : 15 No. of Claims : 5

(12) PATENT APPLICATION PUBLICATION
(21) Application No.202141022496 A
(19) INDIA
(22) Date of filing of Application :20/05/2021
(43) Publication Date : 02/07/2021

(54) Title of the invention : Data minig extension in Multidimensional end of line correlation with process tools of OLAP cubes

(51) International classification	:G06F0016280000, G06Q0030020000, G06F0016245800, G06Q0010060000, B42D0001000000
(31) Priority Document No	:NA
(32) Priority Date	:NA
(33) Name of priority country	:NA
(86) International Application No	:PCT//
Filing Date	:01/01/1900
(87) International Publication No	: NA
(61) Patent of Addition to Application Number	:NA
Filing Date	:NA
(62) Divisional to Application Number	:NA
Filing Date	:NA

(71)**Name of Applicant :**
1)Dr. Sandeep Singh Rawat
Address of Applicant :professor Anurag Univeristy Hyderabad Telangana India 500088 Telangana India
2)Dr. M. Sridevi
3)B.Jyothi
4)N.Swapana Goud
5)Jayendra Kumar
6)Madar Bandu
7)D.Ramana Kumar
(72)**Name of Inventor :**
1)Dr. Sandeep Singh Rawat
2)Dr. M. Sridevi
3)B.Jyothi
4)N.Swapana Goud
5)Jayendra Kumar
6)Madar Bandu
7)D.Ramana Kumar

(57) Abstract :
In this invention a process development is an interaction instrument enhancement system that incorporates: (a) an data mining engine that breaks down finish of-line yield information to distinguish at least one cycle devices related with low yield; and (b) because of yield from the examination, investigates measure device information from the at least one cycle devices to recognize at least one cycle device boundaries related with the low yield. A language composition that coordinates multidimensional extensions (e.g., MDX) and data mining extensions (e.g., DMX) for performing data mining procedure on information living in OLAP cubes. The blueprint gives that the cannot exclusively be a social inquiry; rather a multidimensional question framed utilizing MDX, for instance. The tasks of model creation, preparing and expectation are depicted. A distributed OLAP-based method and system for generating association rules. An architecture is provided for processing transaction data to generate summary information, customer profiles, and association rules. The distributed system includes at least two layers of data warehouse/OLAP stations: local data-warehouse OLAP stations (LDOSs) and a global data-warehouse OLAP station (GDOS). The LDOSs perform local data mining and summarization, and the GDOS merges, mines, and summarizes the input data received from LDOSs. The summarized data is then utilized by the GDOS to generate association rules that can be provided to the LDOSs for business planning.

No. of Pages : 10 No. of Claims : 5

(12) PATENT APPLICATION PUBLICATION
(21) Application No.202141023941 A
(19) INDIA
(22) Date of filing of Application :28/05/2021
(43) Publication Date : 02/07/2021

(54) Title of the invention : PROCESS OF PREPARATION OF ANTI- INFLAMMATORY AND ANALGESIC HERBAL FORMULATION AND PRODUCT THEREOF

(51) International classification	:A61K0036270000, A01N0065440000, A61Q0011000000, A23L0033105000, A23L0011000000
(31) Priority Document No	:NA
(32) Priority Date	:NA
(33) Name of priority country	:NA
(86) International Application No	:PCT//
Filing Date	:01/01/1900
(87) International Publication No	: NA
(61) Patent of Addition to Application Number	:NA
Filing Date	:NA
(62) Divisional to Application Number	:NA
Filing Date	:NA

(71)**Name of Applicant :**
1)SREE BALAJI MEDICAL COLLEGE & HOSPITAL
Address of Applicant :No 7, WORKS ROAD, CHENNAI TAMIL NADU INDIA 600 044. Tamil Nadu India
(72)**Name of Inventor :**
1)DR.A.M .MOORTHY
2)DR.W.M.S JOHNSON

(57) Abstract :
TITLE: PROCESS OF PREPARATION OF ANTI- INFLAMMATORY AND ANALGESIC HERBAL FORMULATION AND PRODUCT THEREOF APPLICANT: SREE BALAJI MEDICAL COLLEGE & HOSPITAL ABSTRACT The present invention discloses a process of preparation of anti- inflammatory and analgesic herbal formulation. The process of the present invention comprises of following steps; a. procuring predetermined amounts of dried plant part of Withaniasomnifera, dried plant part of Vitexnegundo and dried plant part of Hyosoyamusniger followed by mixing and grinding to form a coarse powder; b. extracting the coarse powder by adding predetermined volume of solvent followed by mixing and boiling until the volume reduces to predetermined volume and filtered to form an extract; c. adding predetermined volume of Gingelly oil to the extract followed by mixing and boiling until the volume reduces to predetermined volume and filterd to form a mixture; d. adding predetermined amount of plant part of Alkannatinctoria, predetermined amount of Menthol and predetermined amount of Thymol to the mixture to form the anti-inflammatory and analgesic herbal formulation. The present invention also discloses an anti- inflammatory and analgesic herbal formulation prepared by the process discussed above.

No. of Pages : 9 No. of Claims : 4

(12) PATENT APPLICATION PUBLICATION
(21) Application No.202141024841 A
(19) INDIA
(22) Date of filing of Application :04/06/2021
(43) Publication Date : 02/07/2021

(54) Title of the invention : COVID 19 OUTBREAK PREDICTION WITH MACHINE LEARNING AND AI BASED.

(51) International classification	:G06N0020000000, G06Q0010040000, G06N0007000000, G16H0050800000, G06K0009620000
(31) Priority Document No	:NA
(32) Priority Date	:NA
(33) Name of priority country	:NA
(86) International Application No	:NA
Filing Date	:NA
(87) International Publication No	: NA
(61) Patent of Addition to Application Number	:NA
Filing Date	:NA
(62) Divisional to Application Number	:NA
Filing Date	:NA

(71)**Name of Applicant :**
1)Dr. Papiya Dutta
Address of Applicant :Associate Prof. Department of Electronics & Communication Engineering, Bharat Institute of Engineering and Technology, Hyderabad, Telangana 501510, India. Telangana India
2)Dr. Amit Agrawal
3)Dr. Rajeev Shrivastava
4)Dr. N. Srihari Rao
5)Dr. Prabhakara Rao Kapula
6)Mrs. Chennaboina Kranthi Rekha
7)Mr. Prashant Krishnaji Kulkarni
8)Mrs. Krishnaveni Bukkapatnam
9)Mr. N. Pitcheswararao
10)Dr. Anirban Kanungoe
(72)**Name of Inventor :**
1)Dr. Papiya Dutta
2)Dr. Amit Agrawal
3)Dr. Rajeev Shrivastava
4)Dr. N. Srihari Rao
5)Dr. Prabhakara Rao Kapula
6)Mrs. Chennaboina Kranthi Rekha
7)Mr. Prashant Krishnaji Kulkarni
8)Mrs. Krishnaveni Bukkapatnam
9)Mr. N. Pitcheswararao
10)Dr. Anirban Kanungoe

(57) Abstract :
Our Invention Covid nineteen natural event Prediction with Machine Learning and AI primarily based could be a prediction models for COVID-19 square measure getting used by officers round the world to form the choices and enforce relevant management measures. Among the quality models for COVID-19 international pandemic prediction, straightforward medicine and applied math models have received additional attention by authorities and these models square measure widespread within the media. thanks to a high level of uncertainty and lack of essential knowledge customary models have shown low accuracy for long prediction. though the literature includes many tries to deal with this issue, the essential generalization and strength talents of existing models got to be improved. the most recent international coronavirus epidemic (COVID19) has brought new challenges to the scientific community. computing (AI)-motivated methodologies is also helpful in predicting the conditions, consequences, and implications of such a plague. These forecasts could facilitate to watch and forestall the unfold of those outbreaks. This invention is a proposes a prognostic framework incorporating Support Vector Machines (SVM) within the statement of a possible natural event of COVID-19.

No. of Pages : 15 No. of Claims : 5

(12) PATENT APPLICATION PUBLICATION
(21) Application No.202141025568 A
(19) INDIA
(22) Date of filing of Application :09/06/2021
(43) Publication Date : 02/07/2021

(54) Title of the invention : SMART END-TO-END INTERNET-OF-THINGS MONITORING SOLUTION AND METHODS OF READING MEDICAL DEVICES THEREOF

(51) International classification	:H04L0029080000, H04L0012240000, H04L0012260000, H04W0024040000, G16H0020170000	(71)**Name of Applicant :** **1)Craig Wrentmore** Address of Applicant :34 High Rock Road Wayland, MA 01778, USA U.S.A. **2)Mr. Anuj Dutt** **3)Ms. Aashi**
(31) Priority Document No	:NA	
(32) Priority Date	:NA	
(33) Name of priority country	:NA	
(86) International Application No	:NA	
Filing Date	:NA	
(87) International Publication No	: NA	
(61) Patent of Addition to Application Number	:NA	
Filing Date	:NA	
(62) Divisional to Application Number	:NA	
Filing Date	:NA	

(72)**Name of Inventor :**
1)Craig Wrentmore
2)Mr. Anuj Dutt
3)Ms. Aashi

(57) Abstract :
The present invention herein relates to a smart end-to-end Internet of Things (IoT) enabled plug-play device, more particularly a cloud-infrastructure supported Internet of Things (IoT) solution to enable remote acquisition of health data stream directly from existing and new medical devices independent of manufacturer and delivered the observed anomalies using mobile and web services to the concerned, accurately in real-time, comprising a medical device [100] independent of manufacturer, an Internet of Things (IoT) device [200] acquires health stream data of the medical device [100], and a cloud infrastructure [300] constituted with web and mobile phone based monitoring service, enabled storing of health data to perform historic analysis and remotely delivered the important health information, including anomalies detected using Artificial Intelligence (AI) algorithm embodied in both said IoT device [200] and said cloud infrastructure [300]. FIGURE 1

No. of Pages : 26 No. of Claims : 10

(12) PATENT APPLICATION PUBLICATION
(21) Application No.202141025720 A
(19) INDIA
(22) Date of filing of Application :09/06/2021
(43) Publication Date : 02/07/2021

(54) Title of the invention : INTEGRATED PLANT GROWTH MANAGEMENT COMPOSITION AND METHOD OF PREPARATION THEREOF

(51) International classification	:C05F0003000000, B01J0023420000, C23C0024080000, C05G0005200000, C05G0003000000
(31) Priority Document No	:NA
(32) Priority Date	:NA
(33) Name of priority country	:NA
(86) International Application No	:NA
Filing Date	:NA
(87) International Publication No	: NA
(61) Patent of Addition to Application Number	:NA
Filing Date	:NA
(62) Divisional to Application Number	:NA
Filing Date	:NA

(71)**Name of Applicant :**
1)SRINIVAS BOOSA
Address of Applicant :6-1-279/10/1, Padma Rao Nagar, Near SBI, Opp. Saptagiri Apts, Phase 4, Chilakalguda Secunderabad 500025 Telangana India. Telangana India
(72)**Name of Inventor :**
1)Aloysius Lesto Prabhancana Kusumo
2)SRINIVAS BOOSA

(57) Abstract :
Exemplary embodiments of the present disclosure are directed towards an integrated plant growth management composition and method of preparation thereof. The integrated plant growth management composition comprising:an IPGMS ultimate component, wherein the IPGMS ultimate component comprises microbes blended to convert urine and animal feces into a super organic fertilizer having anti-pesticidal and plant disease protective effects;an IPGMS platinum component, wherein the IPGMS platinum component comprises organic fertilizer and herbal-based pesticidal components; an IPGMS gold component, wherein the IPGMS gold component comprises of fertilizer and biological pesticidal components based on microbes; and binder component, soil conditioner and other additive components. FIG.1

No. of Pages : 26 No. of Claims : 5

(12) PATENT APPLICATION PUBLICATION
(21) Application No.202141025789 A
(19) INDIA
(22) Date of filing of Application :10/06/2021
(43) Publication Date : 02/07/2021

(54) Title of the invention : A SMART TATTOO BASED ALARM SYSTEM FOR WOMEN'S SECURITY

(51) International classification	:F41H0009100000, G08B0021020000, G08B0025010000, A01K0011000000, G08B0025000000
(31) Priority Document No	:NA
(32) Priority Date	:NA
(33) Name of priority country	:NA
(86) International Application No	:NA
Filing Date	:NA
(87) International Publication No	: NA
(61) Patent of Addition to Application Number	:NA
Filing Date	:NA
(62) Divisional to Application Number	:NA
Filing Date	:NA

(71)**Name of Applicant :**
1)Dr.R.Naresh
Address of Applicant :Associate Professor Department of Computer Science and Engineering SRM Institute of Science and Technology Kattankulathur, Chennai -603203. TamilNadu (State) ,India Tamil Nadu India
2)Dr.C.N.S.Vinoth Kumar
3)Mr.D.Abdus Subhahan,
4)Mrs. M.Meenakshi
5)Mrs. A. Saranya
6)Mr. K.Lakshmi Narayanan
7)Mrs. S.Sakthipriya
8)Mrs.M.Mageshwari
9)Mrs.Bharathi.V
10)Mr.Samvad Gour
(72)**Name of Inventor :**
1)Dr.R.Naresh
2)Dr.C.N.S.Vinoth Kumar
3)Mr.D.Abdus Subhahan,
4)Mrs. M.Meenakshi
5)Mrs. A. Saranya
6)Mr. K.Lakshmi Narayanan
7)Mrs. S.Sakthipriya
8)Mrs.M.Mageshwari
9)Mrs.Bharathi.V
10)Mr.Samvad Gour

(57) Abstract :
A SMART TATTOO BASED ALARM SYSTEM FOR WOMEN'S SECURITY ABSTRACT OF THE INVENTION Violence against women has long existed in many developing and even developed countries, in many forms such as eve teasing, sexual harassment, rape, and domestic violence against women. Women must know that they are not alone, but in today's world, women are insecure. Women's safety is the most crucial worry these days. The necessity for designing safety equipment to ensure a safe and secure environment for women continues to grow. This innovation offered a wearable plastic tattoo that automates the emergency alarm system for women's security. Tattoo embedded with GPS sensor, GSM Module, Raspberry Pi Microcontroller, Voice recognizer circuit, Activation Button, Lithium-ion battery, Pressure sensor, alarm buzzer, Pulse-rate sensor and Temperature sensor to detect a possible atrocity automatically. The Tattoo can be activated by the user by themselves, when they are in need of self-defense. It detects and sends notifications for loved ones with the women's position coordinates without requiring her input in critical situations. This includes a method for sending alert messages to the local police station, as well as alert messages to family members and five other nearby people, by tracking their whereabouts using GPS. When a high-pressure force is detected above a threshold amount, together with an increase in cardiac rate and the high voltage generator, an alarm buzzer is activated. A small coin-sized tag is also connected to the tattoo. The tag features an electronic three-axis accelerometer and a wireless notification system that sends notifications to a registered smart phone. This Tattoo is also equipped with a high-voltage electrical generator. It will generate a high voltage, temporarily disarming the attacker. automatically sends a shock wave to the attacker, deterring and discouraging the attacker from inflicting additional violence on the user. This tattoo-based technology is not only utilized for rapes and perverts taunting girls, but it also helps them recover from any bad state or health problem, such as fainting unexpectedly.

No. of Pages : 16 No. of Claims : 9

(12) PATENT APPLICATION PUBLICATION
(21) Application No.202141025832 A
(19) INDIA
(22) Date of filing of Application :10/06/2021
(43) Publication Date : 02/07/2021

(54) Title of the invention : A SYSTEM AND METHOD FOR DETECTING CORONARY HEART DISEASE FROM MEDICAL HISTORY

(51) International classification	:G16H0050200000, G16H0050700000, A61B0006030000, G16B0020000000, G06K0009620000
(31) Priority Document No	:NA
(32) Priority Date	:NA
(33) Name of priority country	:NA
(86) International Application No	:NA
Filing Date	:NA
(87) International Publication No	: NA
(61) Patent of Addition to Application Number	:NA
Filing Date	:NA
(62) Divisional to Application Number	:NA
Filing Date	:NA

(71)**Name of Applicant :**
1)Dr. R SURESH KUMAR
Address of Applicant :S/o. V RAJAGOPAL, ASSOCIATE PROFESSOR, DEPARTMENT OF ELECTRONICS AND COMMUNICATION ENGINEERING, CHENNAI INSTITUTE OF TECHNOLOGY, CHENNAI 600069, TAMIL NADU, INDIA. Tamil Nadu India
2)P SHARON CHRIS HEPZEBAH
3)A RASHEEDHA
4)G S KAVYA
5)S KRISHNAKUMAR
6)P GEORGIA CHRIS SELWYNA
7)S KAYALVIZHI
8)Dr. V YUVARAJ
9)V NAGARAJ
(72)**Name of Inventor :**
1)Dr. R SURESH KUMAR
2)P SHARON CHRIS HEPZEBAH
3)A RASHEEDHA
4)G S KAVYA
5)S KRISHNAKUMAR
6)P GEORGIA CHRIS SELWYNA
7)S KAYALVIZHI
8)Dr. V YUVARAJ
9)V NAGARAJ

(57) Abstract :
The interpretation of clinical data for the diagnosis of coronary heart disease can be done using algorithms in data mining. Most clinical data interpretation systems for diagnosis developed using data mining algorithms with a blackbox approach cannot recognize examination attribute relationships with the incidence of coronary heart disease. The present invention is a system to interpretation clinical examination results for the diagnosis of coronary heart disease based the decision tree algorithm. This system comprises several stages. First, oversampling is carried out by a combination of the synthetic minority oversampling technique (SMOTE), feature selection, and the C4.5 classification algorithm. System testing is done using k-fold cross-validation. The performance parameters are sensitivity, specificity, positive prediction value (PPV), negative prediction value (NPV) and the area under the curve (AUC) autonomy.

No. of Pages : 16 No. of Claims : 2

(12) PATENT APPLICATION PUBLICATION
(21) Application No.202141025991 A
(19) INDIA
(22) Date of filing of Application :11/06/2021
(43) Publication Date : 02/07/2021

(54) Title of the invention : MACROPOROUS METAL SUBSTRATES FOR FUEL CELL SYSTEMS BY 3D FABRICATION METHOD AND THEREOF

(51) International classification	:H01M0008124000, H01M0004860000, H01M0004880000, B33Y0080000000, H01M0008040890
(31) Priority Document No	:NA
(32) Priority Date	:NA
(33) Name of priority country	:NA
(86) International Application No	:NA
Filing Date	:NA
(87) International Publication No	: NA
(61) Patent of Addition to Application Number	:NA
Filing Date	:NA
(62) Divisional to Application Number	:NA
Filing Date	:NA

(71)**Name of Applicant :**
1)Dummugudupu Gopal Raj Suresh
Address of Applicant :Dr.no 7-13-8/1, kirlampudi layout, chinna waltair, Visakhapatnam. Andhra Pradesh India
2)Vuppala jagadesh
3)Komal Sree Varma Raju Dendukuri
4)Aathava Bhargav Kumar
5)BOORLE VIMALESH
6)M. A. Narsimha Raju
7)ALLAMSETTI SAI SUMANTH
8)Venkata Praneet Soorampalli
9)GORLE PAVAN KUMAR
(72)**Name of Inventor :**
1)Dummugudupu Gopal Raj Suresh
2)Vuppala jagadesh
3)Komal Sree Varma Raju Dendukuri
4)Aathava Bhargav Kumar
5)BOORLE VIMALESH
6)M. A. Narsimha Raju
7)ALLAMSETTI SAI SUMANTH
8)Venkata Praneet Soorampalli
9)GORLE PAVAN KUMAR

(57) Abstract :
Porous metal substrates are proposed as a structural support layer for reduced operating temperatures of solid oxide fuel cells. This invention discloses a rapid manufacturing route to produce a porous metal substrate with optimal open porosity to facilitate fuel and oxidant seepage. The introduction of these fabricated porous structures has proven to enhance cell efficiency by reducing fuel cell thickness. Method and processing parameters of selective laser sintering are disclosed in the claims of the present invention. The electrochemical performance of the fuel cell fabricated by the proposed route has reported a 7% plunge in the cells' overall performance compared to the convention fuel cell system.

No. of Pages : 19 No. of Claims : 8

(12) PATENT APPLICATION PUBLICATION
(21) Application No.202141025992 A
(19) INDIA
(22) Date of filing of Application :11/06/2021
(43) Publication Date : 02/07/2021

(54) Title of the invention : ALPHA CEVA - A MASTERPIECE TECHNOLOGY IN AGRICULTURAL MONITORING SYSTEM USING IOT

(51) International classification	:A01G0009240000, G05D0027020000, A01G0007020000, G01D0021020000, A01G0009200000
(31) Priority Document No	:NA
(32) Priority Date	:NA
(33) Name of priority country	:NA
(86) International Application No	:NA
Filing Date	:NA
(87) International Publication No	: NA
(61) Patent of Addition to Application Number	:NA
Filing Date	:NA
(62) Divisional to Application Number	:NA
Filing Date	:NA

(71)**Name of Applicant :**
1)Dr.S.Balakrishnan
Address of Applicant :Professor and Head, Department of Computer Science and Business Systems, Sri Krishna College of Engineering and Technology, Kuniamuthur, Coimbatore. Tamilnadu, India. 641008. Tamil Nadu India
2)Mr.Hariharan K
3)Mr.Balaji B
4)Mr.Yokesh Srenevas R
5)Mr. Srihari M
6)Mr. Nishanth K
7)Mr. Rohit CMR
(72)**Name of Inventor :**
1)Dr.S.Balakrishnan
2)Mr.Hariharan K
3)Mr.Balaji B
4)Mr.Yokesh Srenevas R
5)Mr. Srihari M
6)Mr. Nishanth K
7)Mr. Rohit CMR

(57) Abstract :
The main objective of CEVA (Controlled Environment Vertical Agriculture) is to tackle the difficulties faced by farmers all around the world and to reduce or eliminate the dependency of agriculture on the unpredictable environment, weather or climate. With climate change being such an imminent threat Controlled Environment Vertical Agriculture uses sensors and devices to create an artificial environment that is most suitable for the healthy growth of the plant. It also optimizes the use of resources and reduces the wastage. Agriculture techniques consist of many methods but securely and economically will be a part to have a demand price. Major problems faced by the plants are spread by the diseases caused by insects, climates, their tissues, Improper Rainfalls etc... Imbalanced growth of the plant whereas Overwatering, lack of sunlight, Relative humidity is too low, Soil drains poorly and remains wet for too long, Injured by low temperatures and so on. Most of the plants are facing the problems in both self and cross pollination. Monitoring the water level, room temperature, soil moisture level, nutrient level, light intensity, and so on. Based on IoT, big data and Artificial intelligence smart learning-controlled environment vertical agriculture. Space consumption is maintained flexibly which is depending on plant growth. The setup of CEVA is full of automatic monitoring systems and hydroponic systems.

No. of Pages : 6 No. of Claims : 5

(12) PATENT APPLICATION PUBLICATION
(19) INDIA
(22) Date of filing of Application :11/06/2021

(21) Application No.202141026133 A
(43) Publication Date : 02/07/2021

(54) Title of the invention : DESIGN AND ANALYSIS OF DRY CYLINDER LINERS OF COATED AND NONCOATED MATERIALS USED IN DIESEL ENGINES

(51) International classification	:F02F0007000000, F02B0003060000, F04B0053160000, F16J0010040000, B23K0035280000
(31) Priority Document No	:NA
(32) Priority Date	:NA
(33) Name of priority country	:NA
(86) International Application No	:NA
Filing Date	:NA
(87) International Publication No	: NA
(61) Patent of Addition to Application Number	:NA
Filing Date	:NA
(62) Divisional to Application Number	:NA
Filing Date	:NA

(71)**Name of Applicant :**

1)Gadakary Saikumar, Assistant Professor / Department of Mechanical Engineering, Kakatiya Institute of Technology and Science

Address of Applicant :Kakatiya Institute of Technology and Science, Warangal, Telangana-506015 Telangana India

2)Dr. A. Devaraju, Associate professor/ Department of Mechanical Engineering, Kakatiya Institute of Technology and Science

3)Dr. Md. Sameer, Assistant Professor / Department of Mechanical Engineering, Kakatiya Institute of Technology and Science

4)Rakesh Paladi, Assistant Engineer / Mechanical Maintenance

5)Votarikari Rajesh, Assistant Professor / Department of Mechanical Engineering, Kshyatriya College of Engineering

6)A Kiran Kumar, Assistant Professor / Department of Mechanical Engineering, TKR College of Engineering and Technology

(72)**Name of Inventor :**

1)Gadakary Saikumar, Assistant Professor / Department of Mechanical Engineering, Kakatiya Institute of Technology and Science

2)Dr. A. Devaraju, Associate professor/ Department of Mechanical Engineering, Kakatiya Institute of Technology and Science

3)Dr. Md. Sameer, Assistant Professor / Department of Mechanical Engineering, Kakatiya Institute of Technology and Science

4)Rakesh Paladi, Assistant Engineer / Mechanical Maintenance

5)Votarikari Rajesh, Assistant Professor / Department of Mechanical Engineering, Kshyatriya College of Engineering

6)A Kiran Kumar, Assistant Professor / Department of Mechanical Engineering, TKR College of Engineering and Technology

(57) Abstract :

Abstract A Cylinder liner is a cylindrical part to be fixed in to an engine block to form a cylinder. It is one of the most significant efficient parts to make up the interior of an engine. Aim of to design and analysis of a dry liner for diesel engines. The first step is to model the dry liner part by using Pro/Engineer. In the next step, the amount of heat generated, heat transfer rate of the component, temperature produced inside the cylinder are to be calculated. Usually cylinder liners are ended of Cast Iron, Cast steel, Nickel CI, Nickel chrome CI. The surface of the liner is heat treated to obtain hard surface. The foremost aim of the document is to learn the heat transfer rate, heat flux, temperature distribution, thermal stresses, thermal strain, and thermal gradient of the liner by apply boundary circumstances as a temperature produced inside of the cylinder. And also by applying the surface coatings like ceramic, aluminum alloys and Nickel chrome alloy steel. Also we are conducting fatigue analysis on the liners. Fatigue analysis is used for finding the life time of the component means we can find out numeral of cycles it can with stand for the applied loads.

No. of Pages : 15 No. of Claims : 3

(12) PATENT APPLICATION PUBLICATION
(21) Application No.202141026147 A
(19) INDIA
(22) Date of filing of Application :11/06/2021
(43) Publication Date : 02/07/2021

(54) Title of the invention : INTELLIGENT VIDEO MONITORING SYSTEM BASED ON DEEP LEARNING TECHNIQUES FOR AUTOMATIC SURVEILLANCE

(51) International classification	:H04N0007180000, G06N0003080000, G08B0013196000, H04N0005760000, G06F0016332000
(31) Priority Document No	:NA
(32) Priority Date	:NA
(33) Name of priority country	:NA
(86) International Application No	:NA
Filing Date	:NA
(87) International Publication No	: NA
(61) Patent of Addition to Application Number	:NA
Filing Date	:NA
(62) Divisional to Application Number	:NA
Filing Date	:NA

(71)**Name of Applicant :**
1)Dr. Muthukumar S
Address of Applicant :Dean & Professor, Department of Computer Science and Engineering, Nagarjuna College of Engineering & Technology, Bangalore, Karnataka, India Karnataka India
2)Dr. Amit Jain
3)Dr. Manpreet Singh
4)Dr. Binod Kumar
5)Dr. Ujwal U.J
6)Dr.Karuna Pandit
7)Dr. Smitha M.L
8)Ghanshyam Kalubhai Dobariya
9)Shilpa Dennis
10)Ms. Jyoti Singh
11)Mohammed Azam
(72)**Name of Inventor :**
1)Dr. Muthukumar S
2)Dr. Amit Jain
3)Dr. Manpreet Singh
4)Dr. Binod Kumar
5)Dr. Ujwal U.J
6)Dr.Karuna Pandit
7)Dr. Smitha M.L
8)Ghanshyam Kalubhai Dobariya
9)Shilpa Dennis
10)Ms. Jyoti Singh
11)Mohammed Azam

(57) Abstract :
The present invention relates to intelligent video monitoring system based on deep learning techniques for automatic surveillance. The objective of the present invention is to solve the problems in the prior art technologies related to automatic surveillance.

No. of Pages : 30 No. of Claims : 2

(12) PATENT APPLICATION PUBLICATION
(19) INDIA
(22) Date of filing of Application :11/06/2021

(21) Application No.202141026169 A
(43) Publication Date : 02/07/2021

(54) Title of the invention : ARTIFICIAL NEURAL NETWORK BASED EARLY DIAGNOSIS OF HEALTH DETERIORATION

(51) International classification	:A61B0005000000, A61B0005010000, G06Q0050220000, G16H0040670000, A61B0005024000
(31) Priority Document No	:NA
(32) Priority Date	:NA
(33) Name of priority country	:NA
(86) International Application No	:NA
Filing Date	:NA
(87) International Publication No	: NA
(61) Patent of Addition to Application Number	:NA
Filing Date	:NA
(62) Divisional to Application Number	:NA
Filing Date	:NA

(71)**Name of Applicant :**
1)Prof. Sarath Chandiran. I,Sri Balaji Vidyapeeth Deemed to be University
Address of Applicant :Principal, School of Pharmacy, Sri Balaji Vidyapeeth Deemed to be University SBV Campus, Pillaiyarkuppam Pondicherry India 607402 Pondicherry India
2)K. Aanandha Saravanan,Veltech Rangarajan Dr Sagunthala R &D Institute of Science and Technology
3)Dr. Kaptain Kishor Bajpayee, M. G. College
4)Dr.Ankita Tiwari,Koneru Lakshmaiah Education Foundation
5)Dr.Bhubaneswari Bisoyi,Sri Sri University
6)Dr.S.Vijayaraj,Vels Institute Of Science, Technology & Advanced Studies
7)Parthasarathy K,Indian Naval Academy
8)R.Chandrasekaran,Vels Institute Of Science, Technology & Advanced Studies
9)Dr. Prakash Pralhad Sarwade,Shikshan Maharshi Guruvarya R. G. Shinde Mahavidyalaya
10)Dr. Sheershendu Shil Trivedi,Dr.Ram Manohar Lohiya Degree(P.G.) College
11)Ravi Kishore Veluri,Aditya Engineering College(A)
12)Dr. Ahmed Mateen,University of Agriculture

(72)**Name of Inventor :**
1)Prof. Sarath Chandiran. I,Sri Balaji Vidyapeeth Deemed to be University
2)K. Aanandha Saravanan,Veltech Rangarajan Dr Sagunthala R &D Institute of Science and Technology
3)Dr. Kaptain Kishor Bajpayee, M. G. College
4)Dr.Ankita Tiwari,Koneru Lakshmaiah Education Foundation
5)Dr.Bhubaneswari Bisoyi,Sri Sri University
6)Dr.S.Vijayaraj,Vels Institute Of Science, Technology & Advanced Studies
7)Parthasarathy K,Indian Naval Academy
8)R.Chandrasekaran,Vels Institute Of Science, Technology & Advanced Studies
9)Dr. Prakash Pralhad Sarwade,Shikshan Maharshi Guruvarya R. G. Shinde Mahavidyalaya
10)Dr. Sheershendu Shil Trivedi,Dr.Ram Manohar Lohiya Degree(P.G.) College
11)Ravi Kishore Veluri,Aditya Engineering College(A)
12)Dr. Ahmed Mateen,University of Agriculture

(57) Abstract :
Rapid development of technology, leads to new possibilities embracing in various traditional business sectors specifically Artificial Intelligence along with smart devices plays significant role for the development of health care centre. The technology of Artificial Neural Network transforms the landscape of healthcare, thereby posing higher requirement of resource management in hospitals. This invention develops a smart system that can be deployed for early diagnosis of health deterioration, where vital signs are collected through methods such as Wi-Fi, LoRa etc. This collected data is uploaded through securely connected cloud platform for further processing by which feedback is provided to the users utilizing user interface in real time. This invention measures physiological parameters of In-hospital patients periodically by IoT eliminating the need of a health care professional by ubiquitous monitoring system utilizing sensors, gateways and cloud for analyzing and storage of data. This recorded data is communicated to physicians wirelessly such that physicians are able to access patient™s data from any location through any smart devices such as PC, smart phone or tablet thereby prescribing appropriate medication. Hence Artificial neural network provides Autonomous life care system with higher efficiency and lower cost.

No. of Pages : 11 No. of Claims : 6

(12) PATENT APPLICATION PUBLICATION
(21) Application No.202141026211 A
(19) INDIA
(22) Date of filing of Application :12/06/2021
(43) Publication Date : 02/07/2021

(54) Title of the invention : SWAPPABLE BATTERY OPERATED MULTIPURPOSE AGRICULTURE NANO TRACTOR WITH WIRED PTO(POWER TAKE OFF) AND SOLAR CHARGING STATION

(51) International classification	:B60K0017280000, H02J0007350000, A01B0071060000, E21B0023000000, H02S0010400000	(71)**Name of Applicant :** **1)M Venkat Rao** Address of Applicant :S/O MVR Govinda Murthy, 3-149/6-F1, Venkateshwara Nilayam, Mallikarjuna Nagar, Peerzadiguda, Hyderabad 500092, Telangana Tamil Nadu India
(31) Priority Document No	:NA	(72)**Name of Inventor :** **1)M Venkat Rao**
(32) Priority Date	:NA	
(33) Name of priority country	:NA	
(86) International Application No	:NA	
Filing Date	:NA	
(87) International Publication No	: NA	
(61) Patent of Addition to Application Number	:NA	
Filing Date	:NA	
(62) Divisional to Application Number	:NA	
Filing Date	:NA	

(57) Abstract :
This invention is related to the field of electric tractors. More particularly the invention is related to a Nano tractor with wired PTO and is operable through a swapped battery, wherein one battery is used in the Nano tractor and the other battery is charged in a Solar charging station. Thereby the farmer is assured of use of the tractor without depending on fossil fuels or electricity from the grid. It comprises an overhaul tractor operable by electric power and includes two BLDC motors. Each battery pack is configured to provide power to the tractor for upto 3 hours. One BLDC motor is connected to the rear wheels of the tractor through a 2-speed differential. Another BLDC motor controller is connected to the wired PTO to drive the auxiliary equipment and configured to run even when the tractor ignition is switched off. The tractor is configured to carry 350 KG in high speed and up to 500 kgs in low speed.

No. of Pages : 25 No. of Claims : 3

(12) PATENT APPLICATION PUBLICATION
(19) INDIA
(22) Date of filing of Application :12/06/2021
(21) Application No.202141026212 A
(43) Publication Date : 02/07/2021

(54) Title of the invention : SEAWEED BASED GEL TYPE ORGANIC MANURE AND A PREPARATION METHOD THEREOF

(51) International classification	:A23L0029269000, B01D0011020000, C05F0011000000, A01N0063100000, G01N0033530000
(31) Priority Document No	:NA
(32) Priority Date	:NA
(33) Name of priority country	:NA
(86) International Application No	:NA
Filing Date	:NA
(87) International Publication No	: NA
(61) Patent of Addition to Application Number	:NA
Filing Date	:NA
(62) Divisional to Application Number	:NA
Filing Date	:NA

(71)**Name of Applicant :**
1)SATHYAM BIO
Address of Applicant :12 , GHouse Enclave, 70 Ft road , New Ellish Nagar, Madurai -625016. Tamil Nadu India
(72)**Name of Inventor :**
1)SATHYAM BIO

(57) Abstract :
The proposed invention is related to a gel based product prepared from brown seaweed, used as an agricultural bio-stimulant with using eco-friendly Enzyme-assisted extraction technology. It is useful to be applied in all type of crops in the various application methods to reduce application cost and also to avoid chemical fertilizers that are polluting to soil and other natural environments. The enzyme is a food-grade digestive enzyme, can be used to macerate the tissues and break down the cell walls of natural matrices and releasing cell contents. This is particularly important for marine algae, since cell walls and cutiles are made up of chemically complex and heterogeneous bio-molecules. In the proposed method, temperature, pH, proportion of substrate to enzyme, type of solvent (buffer with appropriate pH) and agitation are important parameters to be considered

No. of Pages : 24 No. of Claims : 6

(12) PATENT APPLICATION PUBLICATION
(19) INDIA
(22) Date of filing of Application :12/06/2021
(21) Application No.202141026215 A
(43) Publication Date : 02/07/2021

(54) Title of the invention : IOT AND CLOUD BASED AGRICULTURAL MONITORING SYSTEM

(51) International classification	:A01M0001020000, A01M0001100000, G06Q0050020000, A01M0001200000, H04L0029080000
(31) Priority Document No	:NA
(32) Priority Date	:NA
(33) Name of priority country	:NA
(86) International Application No	:NA
Filing Date	:NA
(87) International Publication No	: NA
(61) Patent of Addition to Application Number	:NA
Filing Date	:NA
(62) Divisional to Application Number	:NA
Filing Date	:NA

(71)**Name of Applicant :**
1)Dr. VASANTHAKUMAR G U
Address of Applicant :ASSISTANT PROFESSOR DEPARTMENT OF COMPUTER SCIENCE AND ENGINEERING NITTE MEENAKSHI INSTITUTE OF TECHNOLOGY YELAHANKA, BENGALURU- 560064 Karnataka India
2)Dr. HAMANT B. MAHAJAN
3)Mr. AJAY RUPANI
4)Dr. SUDHEER HANUMANTHAKARI
5)Mr. SANDEEP PRABHU M
6)Dr. ASHOK KUMAR KOSHARIYA
7)Dr.ASWATHAPPA .P
8)Mr. PAVAN KUMAR. E
9)Mr. NANJUNDI PRABHU
10)Dr. KISHORKUMAR DHOLWANI
(72)**Name of Inventor :**
1)Dr. VASANTHAKUMAR G U
2)Dr. HAMANT B. MAHAJAN
3)Mr. AJAY RUPANI
4)Dr. SUDHEER HANUMANTHAKARI
5)Mr. SANDEEP PRABHU M
6)Dr. ASHOK KUMAR KOSHARIYA
7)Dr.ASWATHAPPA .P
8)Mr. PAVAN KUMAR. E
9)Mr. NANJUNDI PRABHU
10)Dr. KISHORKUMAR DHOLWANI

(57) Abstract :
ABSTRACT IOT AND CLOUD BASED AGRICULTURAL MONITORING SYSTEM In this present invention, a novel IoT-based device for the programmed sensing and recording of different crop pests damages the agriculture field in various settings. An observing device for detecting diversified pests in the agriculture field that complies with the context of different crop fields of agriculture settings is compatible with the emerging discipline of the Internet of Things (IoT). We consider it can find its place in every field, farms under different environmental settings of agriculture field. This portable box-shaped instrument attracts other targeted insect pests, intellects the pest movement, and robotically takes a snapshot of the integral space inside the box. This agriculture-based insect e-trap comprises strong attractants (pheromone and food) to upsurge the insect arrest efficiency and insect traps on its gluey floor. The e-device transmits the primary optoelectronic radars to monitor all trap entries. As the pest enters, it intrudes the ultraviolet light source. It elicits a detection event, which further snaps a picture, and a time-stamp was fixed before sending the photo through the Wi-Fi to an approved stakeholder. The device can be integrated seamlessly into different agriculture settings and functions unremarkably to farmer's activity. Thus the present invention on various insect pests and, depending on the insect species, can reach an exposure accuracy between 90-95% ranges.

No. of Pages : 21 No. of Claims : 9

(12) PATENT APPLICATION PUBLICATION
(19) INDIA
(22) Date of filing of Application :14/06/2021

(21) Application No.202141026321 A
(43) Publication Date : 02/07/2021

(54) Title of the invention : MACHINE LEARNING ENABLED SENSITIVE FLEX SENSOR BASED BACK SPINE POSITION MONITORING AND ALERT SYSTEM

(51) International classification	:A61B0005000000, B29L0009000000, A63B0069000000, A61B0005024000, G08B0001080000
(31) Priority Document No	:NA
(32) Priority Date	:NA
(33) Name of priority country	:NA
(86) International Application No	:NA
Filing Date	:NA
(87) International Publication No	: NA
(61) Patent of Addition to Application Number	:NA
Filing Date	:NA
(62) Divisional to Application Number	:NA
Filing Date	:NA

(71)**Name of Applicant :**
1)Dr. Mareeswari V
Address of Applicant :Associate Professor & HOD, Department of Computer Science and Engineering, ACS College of Engineering, Kambipura, Mysore Road, Bangalore 560 074, Karnataka. Karnataka India
2)Dr. D. Sivakumar
3)Dr. Prasanna E
4)Sunita S Patil
5)Dr. G. Ramanan
6)Surekha Nigudgi
7)Dr. R. R. Neela Rajan
(72)**Name of Inventor :**
1)Dr. Mareeswari V
2)Dr. D. Sivakumar
3)Dr. Prasanna E
4)Sunita S Patil
5)Dr. G. Ramanan
6)Surekha Nigudgi
7)Dr. R. R. Neela Rajan

(57) Abstract :
i) A Wearable unit that can he worn on the hack of a person covering the entire hack region from shoulder to shoulder and neck to lower spine with flex sensors that measure the degree of hack bending hy the varying resistance of the flex sensor. 2) As claimed in Claim I, the flex sensor connects to a microcontroller embedded unit with data storage for collected data.

No. of Pages : 5 No. of Claims : 4

(12) PATENT APPLICATION PUBLICATION
(21) Application No.202141026322 A
(19) INDIA
(22) Date of filing of Application :14/06/2021
(43) Publication Date : 02/07/2021

(54) Title of the invention : REAL TIME STAGNANT WATER MONITORING SYSTEM IN STREETS USING IOT AND ANDROID

(51) International classification	:C02F0001000000, H01M0008043800, B81C0001000000, G06Q0030020000, E01C0003000000
(31) Priority Document No	:NA
(32) Priority Date	:NA
(33) Name of priority country	:NA
(86) International Application No	:NA
Filing Date	:NA
(87) International Publication No	: NA
(61) Patent of Addition to Application Number	:NA
Filing Date	:NA
(62) Divisional to Application Number	:NA
Filing Date	:NA

(71)**Name of Applicant :**
1)Dr. S. Balaji
Address of Applicant :Associate Professor, Department of Computer Science and Engineering, Panimalar Engineering College, Chennai - 600 123, Tamil Nadu. Tamil Nadu India
2)Ashwin N
3)Enturi Shanmukha Sai
4)Eswarraj B
(72)**Name of Inventor :**
1)Dr. S. Balaji
2)Ashwin N
3)Enturi Shanmukha Sai
4)Eswarraj B

(57) Abstract :
ABSTRACT: In the latest of times due to heavy monsoons roads and houses are flooded with water. Mainly due to poor drainage systems and also because of the unregulated constructions in low-lying areas. As a result of this, water stagnation is a major concern as blocked roads; flooded streets could cause distress to many ongoing commuters and sometimes may lead to accidents. It also acts as an incubator for different parasites and breeding ground for mosquitoes which indeed could lead to the spread of malaria, dengue. We propose an IOT device that would help detect stagnant water in streets and alert the public and the water resources department with the exact location using which necessary measures can be taken by the department in the areas and roads to clear out the water and also to provide real-time updates to the public regarding the routes that are blocked due to excessive water.

No. of Pages : 9 No. of Claims : 7

(12) PATENT APPLICATION PUBLICATION
(19) INDIA
(22) Date of filing of Application :14/06/2021
(21) Application No.202141026334 A
(43) Publication Date : 02/07/2021

(54) Title of the invention : OPTIMETER TO OPTIMIZE ENVIRONMENTAL CONDITION FOR MUSHROOM CULTIVATION

(51) International classification	:A01G0025160000, A01G0018000000, A01G0018600000, G08B0021200000, G05D0022020000
(31) Priority Document No	:NA
(32) Priority Date	:NA
(33) Name of priority country	:NA
(86) International Application No	:NA
Filing Date	:NA
(87) International Publication No	: NA
(61) Patent of Addition to Application Number	:NA
Filing Date	:NA
(62) Divisional to Application Number	:NA
Filing Date	:NA

(71)**Name of Applicant :**
1)Dr. ILANGO VELCHAMY
Address of Applicant :Head-Centre of Excellence for Intelligent Human Computer interaction, Dept of MCA, CMR Institute of Technology, AECS Layout, ITPL Mam Road, Bangalore, Karnataka, India 560 037. Karnataka India
(72)**Name of Inventor :**
1)Dr. ILANGO VELCHAMY
2)Dr. V R UMA
3)Ms. I. PAVAI

(57) Abstract :
This optimeter device will be used to optimize climatic conditions and environmental parameters such as temperature, humidity and ventilation, water requirements,pestiside requirement for mushroom cultivation in the rooms irrespective of different mushroom types. With the use of this device, installing sprinkler irrigation system in mushroom cultivation rooms became fully automatic. Optimal compost and casing humidity will be achieved by a newly developed system, with a method that use input from compost and casing humidity sensors and the climate controller. This device is Arduino based system . Two moisture sensors will be used, the moisture sensors can identify wet and dry areas in a growing room and have the potential to improve uniformity in substrate moisture and mushroom cropping. Additionally, Two more sensors were placed at the center and corner of the mushroom house to measure the temperature and humidity which were transmitted to the remote monitoring device via a micro-controller unit for further action. Since the system is connected to the Internet, any mobile device which has access to the Internet will be able to access the system .

No. of Pages : 7 No. of Claims : 3

(12) PATENT APPLICATION PUBLICATION
(21) Application No.202141026335 A
(19) INDIA
(22) Date of filing of Application :14/06/2021
(43) Publication Date : 02/07/2021

(54) Title of the invention : SYSTEM AND APPARATUS FOR DISPLAYING TEXT AND IMAGES AND VIDEOS FOR ON LINE INTERACTIVE TEACHING AND LEARNING FOR RURAL LEARNERS

(51) International classification	:H02J0007350000, G09B0005060000, G08G0001017000, H04N0007140000, H04N0007180000
(31) Priority Document No	:NA
(32) Priority Date	:NA
(33) Name of priority country	:NA
(86) International Application No	:NA
Filing Date	:NA
(87) International Publication No	: NA
(61) Patent of Addition to Application Number	:NA
Filing Date	:NA
(62) Divisional to Application Number	:NA
Filing Date	:NA

(71)**Name of Applicant :**
1)Dr. ILANGO VELCHAMY
Address of Applicant :Head - Centre of Excellence For Intelligent Human Computer Interaction, Dept of MCA, CMR Institute of Technology, AECS Layout, ITPL Main Road, Bangalore-560 037, Karnataka, India 560 037. Karnataka India
(72)**Name of Inventor :**
1)Dr. ILANGO VELCHAMY
2)Dr. V R UMA
3)Ms. I. PAVAI

(57) Abstract :
Abstract: A portable and integrated device is the need of the current era particularly in Information and Communication Technology based online teaching and learning practice. Robustness of this device is to withstand the rough conditions of high temperatures, the lack of cooling infrastructure, the large amounts of dust in the environment, and the lack of soft-handling. This system will be having two video inputs and outputs ports with for display high- definition images. This system will be having two audio inputs and outputs. It has a recording facility also. It has a high-definition web camera and microphone facility also. It is portable it can be installed even in buses and vans with both rear and front projection and it has significant inbuilt storage space upto one terabyte. The powerful speaker 40 watt gives clear sound. It has two USB ports and two HDMI ports and Wifi and Bluetooth based system, operating systems and leading presentation software such as Android , PowerPoint, PDF. This device can be powered using anything from inverters or car batteries to solar power in situations where there is no electricity. Installing such devices may enhance the life time of the display device and also uninterrupted interactive learning. The one of the main peculiarities of this innovation is, it is affordable for everyone. It is an integrated portable multimedia display device. It has a solar panel that is used for charging the battery. The battery is inbuilt. This device is portable and can function for a long time without power supply. This device has an inbuilt touch screen through which it can be operated.The remote-control device facilitates smooth operation of this device

No. of Pages : 5 No. of Claims : 3

(12) PATENT APPLICATION PUBLICATION
(21) Application No.202141026366 A
(19) INDIA
(22) Date of filing of Application :14/06/2021
(43) Publication Date : 02/07/2021

(54) Title of the invention : BATTERY SWAPPING SYSTEM AND METHOD OF OPERATION THEREOF

(51) International classification	:B60S0005060000, B60L0053800000, B60L0058100000, B60L0050500000, B62D0051020000	(71)**Name of Applicant :** **1)Pravaig Dynamics Private Limited** Address of Applicant :Plot No. 76, KIADB Hi Tech Hardware Park, Mahadeva Kodigehalli, Bengaluru, Karnataka-562149, India Karnataka India
(31) Priority Document No	:NA	(72)**Name of Inventor :**
(32) Priority Date	:NA	**1)KHULLAR, Dhawal**
(33) Name of priority country	:NA	**2)BAGRI, Siddhartha**
(86) International Application No	:NA	
Filing Date	:NA	
(87) International Publication No	: NA	
(61) Patent of Addition to Application Number	:NA	
Filing Date	:NA	
(62) Divisional to Application Number	:NA	
Filing Date	:NA	

(57) Abstract :
ABSTRACT BATTERY SWAPPING SYSTEM AND METHOD OF OPERATION THEREOF A battery swapping system 500 for an electric vehicle 700, comprising at least one slot 610 provided on a battery 600; and a platform 100 having a depth d to receive a battery 600 and the platform 100 comprise at least one arm having a fixed end 52 and a free end 54 with a pin 58, each disposed an first inner wall 12™ and a second inner wall 13™ along a length l of the platform 100; a plurality of wheels 30 disposed on an outer surface of the platform 100; a lifting mechanism 40 attached to the fixed end 52 to toggle the at least one arm 50 between an upper configuration 42 and a downward configuration 44; an alignment system 300 having a plurality of camera 315 disposed onto the platform 100 and a plurality of alignment marker 310 disposed onto a chassis 760 of the vehicle 700; a positioning system 400 provided in the platform 100 connected to a central server 450 located remotely. A method 2000 of swapping depleted battery 600™ with recharged battery 600 by the system 500 includes a step of removal of a discharged battery 600™ from a vehicle 700 and a step of insertion of a fully recharged battery 600 into the vehicle 700 using the battery swapping system 500. Figure 1

No. of Pages : 36 No. of Claims : 31

(12) PATENT APPLICATION PUBLICATION
(21) Application No.202141026373 A
(19) INDIA
(22) Date of filing of Application :14/06/2021
(43) Publication Date : 02/07/2021

(54) Title of the invention : NOVEL INTERNET OF THINGS BASED ARTIFICIAL INTELLIGENCE APPROACH TO HEALTH CARE MONITORING & CONTROLLED SYSTEM

(51) International classification	:A61B0005000000, A61M0016000000, G16H0050300000, G16H0010650000, A61M0016060000
(31) Priority Document No	:NA
(32) Priority Date	:NA
(33) Name of priority country	:NA
(86) International Application No	:NA
Filing Date	:NA
(87) International Publication No	: NA
(61) Patent of Addition to Application Number	:NA
Filing Date	:NA
(62) Divisional to Application Number	:NA
Filing Date	:NA

(71)**Name of Applicant :**
1)Dr. V Nagajothi
Address of Applicant :Principal, Shree Chandra Prabhu Jain College, Minjur, Chennai, Tamil Nadu, India Tamil Nadu India
2)Apoorva Joshi
3)K.Sharan Teja Reddy
4)Dr. Rajesh Bhausaheb Lahane
5)Ms. Sushma V
6)B. Keerthi Priya
7)Mr.Thamba Meshach W
8)Dr. A. Devendran
9)Dr. Niraj Upadhayaya
10)Dr. Shubhangi Milind Joshi
11)Dr. Pavithra G.
12)Prof. Trupti Shripad Tagare
13)Dr. Shashi Raj K.
14)Prof. Kavita Guddad
(72)**Name of Inventor :**
1)Dr. V Nagajothi
2)Apoorva Joshi
3)K.Sharan Teja Reddy
4)Dr. Rajesh Bhausaheb Lahane
5)Ms. Sushma V
6)B. Keerthi Priya
7)Mr.Thamba Meshach W
8)Dr. A. Devendran
9)Dr. Niraj Upadhayaya
10)Dr. Shubhangi Milind Joshi
11)Dr. Pavithra G.
12)Prof. Trupti Shripad Tagare
13)Dr. Shashi Raj K.
14)Prof. Kavita Guddad

(57) Abstract :
The present invention relates to novel internet of things based artificial intelligence approach to health care monitoring & controlled system. The objective of the present invention is to solve the problems in the prior art technologies related to monitoring of patient on oxygen therapy.

No. of Pages : 30 No. of Claims : 4

(12) PATENT APPLICATION PUBLICATION
(19) INDIA
(22) Date of filing of Application :14/06/2021

(21) Application No.202141026441 A
(43) Publication Date : 02/07/2021

(54) Title of the invention : EMBEDDED BASED SMART GARDENING SYSTEM

(51) International classification	:G01W0001140000, G06Q0050020000, A61M0016060000, H04M0001725000, A01G0007040000
(31) Priority Document No	:NA
(32) Priority Date	:NA
(33) Name of priority country	:NA
(86) International Application No	:NA
Filing Date	:NA
(87) International Publication No	: NA
(61) Patent of Addition to Application Number	:NA
Filing Date	:NA
(62) Divisional to Application Number	:NA
Filing Date	:NA

(71)**Name of Applicant :**
1)S. SWEETLINE SHAMINI
Address of Applicant :Assistant Professor, Department of Electronics and Communication Engineering, Sri Sai Ram Institute of Technology, Chennai, Tamil Nadu, India Tamil Nadu India
2)MALA YADAV
3)RAJESH NARAYAN DEO
4)AMIT KUMAR KESARWANI
5)NAND KISHORE
6)Dr. SURESH SEETHARAMAN
7)Dr. THERESA CENATE C F
8)Dr. N. MANIKANDAN
9)CHANDAN KUMAR
10)Dr. B. MUTHUVEL
(72)**Name of Inventor :**
1)S. SWEETLINE SHAMINI
2)MALA YADAV
3)RAJESH NARAYAN DEO
4)AMIT KUMAR KESARWANI
5)NAND KISHORE
6)Dr. SURESH SEETHARAMAN
7)Dr. THERESA CENATE C F
8)Dr. N. MANIKANDAN
9)CHANDAN KUMAR
10)Dr. B. MUTHUVEL

(57) Abstract :
ABSTRACT Embedded based Smart Gardening System This invention is related to the field of electronics and communication. This invention is an embedded based smart gardening system. It includes the use of different sensors for the development of plants and vegetables. The sensors are configured to estimate the temperature, humidity and barometric pressure and communicate it directly to a mobile application. A light dependent resistor radiates light of a particular tone which is required for a plant. A rain gauge sensor detects rainfall and conserves water supply to the plant while raining. The sensors are connected to a microcontroller, and the collected information is displayed in a mobile application in a smartphone. Provision to configure and control the operation of all the sensors is provided in the application.

No. of Pages : 9 No. of Claims : 2

(12) PATENT APPLICATION PUBLICATION
(21) Application No.202141026467 A
(19) INDIA
(22) Date of filing of Application :14/06/2021
(43) Publication Date : 02/07/2021

(54) Title of the invention : HIGH-PERFORMANCE CU BASED ELECTRODE DESIGN FOR ELECTROLYTIC ANTIFOULING IN MARINE WATERS

(51) International classification	:C09D0005160000, C04B0018020000, B01J0020300000, B22F0003100000, H01G0011260000
(31) Priority Document No	:NA
(32) Priority Date	:NA
(33) Name of priority country	:NA
(86) International Application No	:NA
Filing Date	:NA
(87) International Publication No	: NA
(61) Patent of Addition to Application Number	:NA
Filing Date	:NA
(62) Divisional to Application Number	:NA
Filing Date	:NA

(71)**Name of Applicant :**
1)Maduthuri Venkatesh
Address of Applicant :House no: 54-3-22, ramalayam street, Isukathota, Visakhapatnam Andhra Pradesh India
2)Dr.Vanthala Varaha Siva Prasad
3)Dr.Injeti N Niranjan Kumar
4)Teegala Hadassah
5)Dr. Beera Satish Ben
6)Dr. Beera Avinash Ben
7)M.V. Krishna Mohan
8)Palivela Yeshwanth Kumar
9)Kokkiri Hima Bindu
10)Marla Vikranth
(72)**Name of Inventor :**
1)Maduthuri Venkatesh
2)Dr.Vanthala Varaha Siva Prasad
3)Dr.Injeti N Niranjan Kumar
4)Teegala Hadassah
5)Dr. Beera Satish Ben
6)Dr. Beera Avinash Ben
7)M.V. Krishna Mohan
8)Palivela Yeshwanth Kumar
9)Kokkiri Hima Bindu
10)Marla Vikranth

(57) Abstract :
This invention relates to the design of high surface area electrode contours with fin-like structures made up of commercial-grade, affordable aluminium metal/ alloy. The developed alloy is coated with a thick layer of a copper material system, specifically cuprous oxides, with added additives to mitigate marine environments' fouling phenomena. The electrode has entailed a significant decrease in ion release times in the water systems. For particulars on the invention, refer to the claims and drawings section.

No. of Pages : 19 No. of Claims : 10

(12) PATENT APPLICATION PUBLICATION
(21) Application No.202141026538 A
(19) INDIA
(22) Date of filing of Application :15/06/2021
(43) Publication Date : 02/07/2021

(54) Title of the invention : AN INTELLIGENCE TECHNIQUE TO MAXIMIZE POWER GENERATION USING SOLAR PANEL AND ITS MAINTENANCE

(51) International classification	:H02S0020320000, F24S0030000000, F24S0030425000, H02S0020100000, F24S0050200000	(71)**Name of Applicant :** **1)VEENA K N** Address of Applicant :School of ECE, REVA University, Rukmini Knowledge Park, Kalligenahalli, Yelahanka, Bengaluru, Karnataka, India 560064. Karnataka India
(31) Priority Document No	:NA	**2)NIKHITA R JALAPURE**
(32) Priority Date	:NA	**3)NAYAN KUMAR M**
(33) Name of priority country	:NA	**4)NAVEEN SAI CHANDRA K**
(86) International Application No	:NA	**5)HARSHAVARDHAN T**
Filing Date	:NA	(72)**Name of Inventor :**
(87) International Publication No	: NA	**1)VEENA K N**
(61) Patent of Addition to Application Number	:NA	**2)NIKHITA R JALAPURE**
Filing Date	:NA	**3)NAYAN KUMAR M**
(62) Divisional to Application Number	:NA	**4)NAVEEN SAI CHANDRA K**
Filing Date	:NA	**5)HARSHAVARDHAN T**

(57) Abstract :
ABSTRACT: The Earth receives the maximum amount (174 Peta Watts) of radiation from the upper atmosphere. Approximately 30% is reflected to space while the remainder is absorbed. Solar energy is an alternate for fossil fuels because it is non-polluting, clean, reliable, and renewable source of energy. It does not pollute the air by releasing harmful gases to the environment like carbon dioxide, nitrogen oxide or Sulphur oxide. So, the risk of damage is reduced. Thus, the utilization of solar devices was more suggested and therefore the traffic light and streetlights in villages was installed using solar array, but the solar PV modules are generally employed within the dusty environments and therefore the dust gets accumulated on the front surface of the module and blocks the incident light form the sun and it reduces the facility generation capacity of the module, the power output reduces if the module is not cleaned for a frequently. In order to regularly clean the dust, this research presents a control application of a sun tracker that can follow the sun with high accuracy and clean the dust on the panel without requiring a precise process of installation or recalculation. The designed tracking system include sensors, microcontroller, drivers for dc motors and gear- bearing arrangements with supports and mountings. DC motor is used to move the system panel in order that suns beam is in a position to stay aligned with the solar array and also clean the dust on the panel by wiping the panel using wipers which improves the efficiency of the solar array. Simulation and experimental results are obtained from a low-cost single axis solar tracker and exposed. Energy saving factors are taken under consideration, which means that, among other factors, the sun isnt constantly tracked with an equivalent accuracy, to stop energy over consumption by the motors.

No. of Pages : 9 No. of Claims : 7

(12) PATENT APPLICATION PUBLICATION
(21) Application No.202141026539 A
(19) INDIA
(22) Date of filing of Application :15/06/2021
(43) Publication Date : 02/07/2021

(54) Title of the invention : IOT BASED FLOOD DETECTION AND SUITABLE EVACUATION DURING PANDEMIC

(51) International classification	:G06Q0050260000, G08B0027000000, G06Q0010060000, G08B0021100000, E04H0009140000	(71)**Name of Applicant :**
(31) Priority Document No	:NA	**1)Dr. Rajashekhar S.Laddimth**
(32) Priority Date	:NA	Address of Applicant :Assistant Professor, School of civil engineering, REVA University Karnataka India
(33) Name of priority country	:NA	**2)Ms. Shwetha Y R**
(86) International Application No	:NA	**3)Ms. Bhooshi Mahathi**
Filing Date	:NA	**4)Mr.Sanjeevaraddi**
(87) International Publication No	: NA	**5)Ms.Roshni Gangopadhyay**
(61) Patent of Addition to Application Number	:NA	**6)Mr.Sangamesh**
Filing Date	:NA	(72)**Name of Inventor :**
(62) Divisional to Application Number	:NA	**1)Dr. Rajashekhar S.Laddimth**
Filing Date	:NA	**2)Ms. Shwetha Y R**
		3)Ms. Bhooshi Mahathi
		4)Mr.Sanjeevaraddi
		5)Ms.Roshni Gangopadhyay
		6)Mr.Sangamesh

(57) Abstract :
Abstract Flooding has been one of the most devastating natural disasters that causes massive loss of lives and property. Identifying the frequently affected areas with flash floods and an evacuation plans for proposing suitable measures in the event of a pandemic (COVID-19) is need of the hour. Preparing an evacuation strategy much before the occurrence of flood helps to avoid the end-moment disorganization. The mitigation plan involves stakeholders and more importantly the decision-maker to exercise the care and precautions during the evacuation process. This work demonstrates the evacuation of the population from flood-affected regions to mitigate flood hazards. The real-time information on monitoring flooded zones, the GSM module is used. The cloud data from the ultrasonic sensor transmit the data to the GSM module for sending an alert via SMS. The analysis shows the capability of integration of GSM and smartphone to caution an alert to the inhabitants prior to the disaster. The experimental validation is carried out by testing the setup for two different environmental conditions. The proposed prototype will provide an alert system to overcome the flood evacuation risk during the event of a pandemic (COVID-19). The prototype is IoT-based which is significantly in line with the Cyber-Physical System, supporting the infrastructure of the Cyber-Physical System.

No. of Pages : 10 No. of Claims : 1

(12) PATENT APPLICATION PUBLICATION
(19) INDIA
(22) Date of filing of Application :15/06/2021
(21) Application No.202141026549 A
(43) Publication Date : 02/07/2021

(54) Title of the invention : INTELLIGENT MECHANICAL ROBOTIC WEED CONTROLLER FOR SUGAR BEET PRODUCTION

(51) International classification	:A01M0021040000, G06Q0010060000, A01M0021020000, A01M0007000000, G06Q0050300000
(31) Priority Document No	:NA
(32) Priority Date	:NA
(33) Name of priority country	:NA
(86) International Application No	:NA
Filing Date	:NA
(87) International Publication No	: NA
(61) Patent of Addition to Application Number	:NA
Filing Date	:NA
(62) Divisional to Application Number	:NA
Filing Date	:NA

(71)**Name of Applicant :**
1)Dr. P Monica
Address of Applicant :Assistant professor, Department of Electrical and Electronics Engineering, Sri Venkateswara college of Engineering and Technology RVS Nagar, Chittoor -517127 Andhra Pradesh India
2)Dr. N. Keerthi Kumar
3)Mr. Banoth Devender
4)Dr. Raghvendra Subramanya
5)Dr. N. M. Sivaram
6)Dr.Yadavalli Basavaraj
7)Mr.B K. Pavan Kumar
8)Mr. T H, Manjunatha
9)Mr. Mayur D Pawar
10)Dr. H. Kanagasabapathy
11)Mr. D. Saravanan
12)Dr. D. Stalin David
13)Mr. R. Parthiban
14)Mr. A S. Rajesh
15)Mr. Shashi Kant Gupta
(72)**Name of Inventor :**
1)Dr. P Monica
2)Dr. N. Keerthi Kumar
3)Mr. Banoth Devender
4)Dr. Raghvendra Subramanya
5)Dr. N. M. Sivaram
6)Dr.Yadavalli Basavaraj
7)Mr.B K. Pavan Kumar
8)Mr. T H, Manjunatha
9)Mr. Mayur D Pawar
10)Dr. H. Kanagasabapathy
11)Mr. D. Saravanan
12)Dr. D. Stalin David
13)Mr. R. Parthiban
14)Mr. A S. Rajesh
15)Mr. Shashi Kant Gupta

(57) Abstract :
Abstract INTELLIGENT MECHANICAL ROBOTIC WEED CONTROLLER FOR SUGAR BEET PRODUCTION Precision farming currently depends on chemicals such as herbicides and pesticides, which increases pollution and decreases sustainability. As a result, autonomous robotic weeding systems have demonstrated their full potential to lessen current pesticide use while helping to reduce environmental pollution. Most past weed control efforts have required quick and constant-time weed detection systems to get real-time treatment, such as robotic learning-based algorithms. Non-overlapping multi-camera methods are used in this invention concept to provide flexibility for the intelligent weed management system to manage the variable delays in classifying the plant.

No. of Pages : 19 No. of Claims : 5

(12) PATENT APPLICATION PUBLICATION
(19) INDIA
(22) Date of filing of Application :15/06/2021
(21) Application No.202141026551 A
(43) Publication Date : 02/07/2021

(54) Title of the invention : BIOGENIC PICKLING SOLUTION FOR MILD STEEL

(51) International classification	:C23G0001080000, C23G0001060000, C23G0001100000, C23G0001360000, C23G0001040000
(31) Priority Document No	:NA
(32) Priority Date	:NA
(33) Name of priority country	:NA
(86) International Application No	:NA
Filing Date	:NA
(87) International Publication No	: NA
(61) Patent of Addition to Application Number	:NA
Filing Date	:NA
(62) Divisional to Application Number	:NA
Filing Date	:NA

(71)**Name of Applicant :**
1)NATIONAL INSTITUTE OF TECHNOLOGY TIRUCHIRAPPALLI
Address of Applicant :National Institute of Technology Tiruchirappalli, Tiruchirappalli 620 015, Tamil Nadu, India Tamil Nadu India

(72)**Name of Inventor :**
1)MUTHUKUMAR KRISHNAN
2)HARINEE SUBRAMANIAN
3)ARTHUR JAMES RATHINAM
4)ASHOK MAHALINGAM
5)VIGNESH SIVANANDHAM
6)SANTHOSH GOKUL MURUGAIAH
7)HENCIYA SANTHASEELAN
8)PALANICHAMY SEENI
9)SUBRAMANIAN GOPALAN
10)RAJKUBERAN CHANDRASEKARAN
11)MATHIMANI THANGAVEL

(57) Abstract :
The invention related to the field of corrosion inhibitors. The invention deals with eco-friendly pickling solution and an application of the environment-friendly pickling corrosion inhibitor of mild steel. The invention discloses a biogenic pickling solution, comprising concentrated hydrochloric acid, methanolic extract of Turbinaria ornata (T. ornata) fucales and L-cystein. Additionally, the invention provides a pickling solution for mild steel which is environmentally safe and could be an acceptable replacement for ASTM G 1-03 recommends Clarke™s (ASTM Std. pickling/ Clarke™s) solution for the cleaning of iron and steel.

No. of Pages : 27 No. of Claims : 5

(12) PATENT APPLICATION PUBLICATION
(19) INDIA
(22) Date of filing of Application :15/06/2021
(21) Application No.202141026587 A
(43) Publication Date : 02/07/2021

(54) Title of the invention : A ROADMAP FOR BUILDING AN SLA MANAGEMENT ARCHITECTURE FOR IOT NETWORKS

(51) International classification	:H04L0012240000, A61L0027400000, H04L0012260000, H04L0012400000, A61L0027060000
(31) Priority Document No	:NA
(32) Priority Date	:NA
(33) Name of priority country	:NA
(86) International Application No	:NA
Filing Date	:NA
(87) International Publication No	: NA
(61) Patent of Addition to Application Number	:NA
Filing Date	:NA
(62) Divisional to Application Number	:NA
Filing Date	:NA

(71)**Name of Applicant :**
1)Mr. HERBERT RAJ. P
Address of Applicant :PROFESSOR, DEPARTMENT OF COMPUTER SCIENCE, INDRA GANESAN COLLEGE OF ARTS AND SCIENCE, IG VALLEY, MADURAI MAIN ROAD, MANIKANDAM, TRICHY, TAMIL NADU-620012 Tamil Nadu India
2)Dr. P. RAVIKUMAR
3)Dr. JAYWANT RAMDAS BHADANE
4)Dr. GOPIKRISHNAN. M
5)Dr. BHARAT MUKUNDRAI JOSHI
6)Dr. T. VASUDEVA REDDY
7)Dr. K. RAJESHWAR RAO
8)Dr. R. KARTHICK
9)Dr. K. S. DHANALAKSHMI
10)Mr. R.SENTHILKUMAR
(72)**Name of Inventor :**
1)Mr. HERBERT RAJ. P
2)Dr. P. RAVIKUMAR
3)Dr. JAYWANT RAMDAS BHADANE
4)Dr. GOPIKRISHNAN. M
5)Dr. BHARAT MUKUNDRAI JOSHI
6)Dr. T. VASUDEVA REDDY
7)Dr. K. RAJESHWAR RAO
8)Dr. R. KARTHICK
9)Dr. K. S. DHANALAKSHMI
10)Mr. R.SENTHILKUMAR

(57) Abstract :
In this work, we have proposed a roadmap for building SLA management architecture for operated IoT networks. We distinguish five functional entities: 1. The SLA Observer, which collects network performance metrics; 2. The Service Registry, which stores the measurements in the form of structured data; 3. The SLA Admitter, which analyzes the possibility of implementing the SLAs; 4. The SLA Manager, who analyzes the state of the network, verifies the application of service objectives and constructs instructions for maintaining QoS and installing new flows; 5. The SLA Enforcer, which adapts the network configuration to the instructions given to it. We have shown how these entities can guarantee QoS, and thus maintain the levels of service expected by customers. Our SLA architecture defines the interactions between these entities and describes the functions they apply and implement. Our examples are positioned in the context of the robust IEEE Std 802.15.4-2015 TSCH mode standard. This infrastructure offers flexibility: the operator is able to manage the lifespan of the relays by balancing the traffic, according to SLA starts and interruptions. He reports on the KPIs expected by customers and by himself. The architecture also allows the operator to adapt the network configuration (which depends on the technology chosen) to changes in the radio environment, and, if necessary, to alert the actors to an abnormal state of the network. The architecture must be adapted to the underlying protocol stack: we are considering its implementation within the framework of 6TiSCH and validation by experimentation. Depending on the level of requirements of the applications (e.g. low constraints in terms of time and speed), the operator can adopt the same SLA management architecture with technological choices different from 6TiSCH (e.g. LoRa).

No. of Pages : 26 No. of Claims : 5

(12) PATENT APPLICATION PUBLICATION
(21) Application No.202141026637 A
(19) INDIA
(22) Date of filing of Application :15/06/2021
(43) Publication Date : 02/07/2021

(54) Title of the invention : SYSTEM AND METHOD TO UNLOAD A LOADING MATERIAL FROM OPEN BOX RAILWAY WAGONS

(51) International classification	:B61D0007320000, F04B0041020000, B60P0001040000, B61D0047000000, C05F0017964000	(71)**Name of Applicant :** **1)KUNAPARAJU RAMBABU** Address of Applicant :Villa# 71, Indu Fortune Fields, 13th Phase KPHB Colony, Hyderabad, Telangana-500072, India. Telangana India
(31) Priority Document No	:NA	(72)**Name of Inventor :**
(32) Priority Date	:NA	**1)KUNAPARAJU RAMBABU**
(33) Name of priority country	:NA	
(86) International Application No	:NA	
Filing Date	:NA	
(87) International Publication No	: NA	
(61) Patent of Addition to Application Number	:NA	
Filing Date	:NA	
(62) Divisional to Application Number	:NA	
Filing Date	:NA	

(57) Abstract :
Exemplary embodiments of the present disclosure are directed towards system and method to unload loading material from open box train wagons. The system comprising: a frame structure comprising a pair of parallelly running channels placed above open box railway wagon containing the unloading material, the pair of parallelly running channels are placed above the ground based on the height of the open box railway wagon, and the pair of parallelly running channels are joined with a pair of concrete/steel columns emerging from a ground surface; and a detachable plate or a detachable mesh or a detachable bucket or a detachable wire brush, fitted to a piston of a hydraulic / pneumatic jack powered by hydraulic power pack positioned and screwed at a bottom, the hydraulic jack is fitted to a base plate and the base plate is operably coupled to a trolley that moves frontwards and backwards by a geared motor fixed to the trolley and a piston of a hydraulic jack is moved up and down by virtue of hydraulic/pneumatic pressure produced by the hydraulic/pneumatic jack. FIG. 1

No. of Pages : 23 No. of Claims : 6

(12) PATENT APPLICATION PUBLICATION
(21) Application No.202141026646 A
(19) INDIA
(22) Date of filing of Application :15/06/2021
(43) Publication Date : 02/07/2021

(54) Title of the invention : A PROCESS FOR PREPARING NANOFIBERS FACE MASK

(51) International classification	:A41D0013110000, D01D0005000000, A62B0017000000, B01D0039160000, A62B0023020000
(31) Priority Document No	:NA
(32) Priority Date	:NA
(33) Name of priority country	:NA
(86) International Application No	:NA
Filing Date	:NA
(87) International Publication No	: NA
(61) Patent of Addition to Application Number	:NA
Filing Date	:NA
(62) Divisional to Application Number	:NA
Filing Date	:NA

(71)**Name of Applicant :**
1)Dr. Thomas Varghese
Address of Applicant :Aiswarya, TC-13/2195(11), Near Mulavana Jn., Prabha Lane 19, Vanchiyur PO, Thiruvananthapuram-695035 Kerala India
2)Dr. T H Sukirtha
(72)**Name of Inventor :**
1)Dr. Thomas Varghese
2)Dr. T H Sukirtha
3)Mathew John
4)Hitha H
5)Dr. Priyanka KP
6)Anjaly Jose

(57) Abstract :
The present invention generally relates to a process for preparing nanofibers face mask. In the present invention, uniform sized nanotitania and nanofibers coated three-layer face masks are fabricated using electrospinning method. The meltblown fabric coated with TiO2 nanoparticles and Nylon 6 blended nanofibers is used as the filter layer of the face mask, which prevents particles or pathogens from penetrating in either direction. It also provides additional protective functions in UV protection and stopping capillary diffusion of airborne microorganisms and contaminants, and degrades them.

No. of Pages : 28 No. of Claims : 10

(12) PATENT APPLICATION PUBLICATION
(21) Application No.202141026702 A
(19) INDIA
(22) Date of filing of Application :15/06/2021
(43) Publication Date : 02/07/2021

(54) Title of the invention : SMART CHAIR

(51) International classification	:G06Q0010100000, A61B0005110000, A47C0007020000, A47C0031120000, A61F0005020000
(31) Priority Document No	:NA
(32) Priority Date	:NA
(33) Name of priority country	:NA
(86) International Application No	:NA
Filing Date	:NA
(87) International Publication No	: NA
(61) Patent of Addition to Application Number	:NA
Filing Date	:NA
(62) Divisional to Application Number	:NA
Filing Date	:NA

(71)**Name of Applicant :**
1)Gayana K N
Address of Applicant :School of CSE, REVA University Karnataka India
2)Goutami G Manvi
3)Mr. Ravishankar H
4)K Divyanjali
5)G Ramya sree
(72)**Name of Inventor :**
1)Mr. Ravishankar H
2)Goutami G Manvi
3)Gayana K N
4)K Divyanjali
5)G Ramya sree

(57) Abstract :
Smart chair to encourage healthy habits in an office job. One of the major issues faced by office workers is back pain caused by long periods of sitting time coupled with poor posture. The smart chair gathers and interprets data on the user's sitting posture. The smart chair would monitor the sitting time on the chair and reminds us to take a break at a regular interval. The device would also monitor the user's posture and provide feedback. The smart chair would pair with an application on the user's phone to provide feedback and reminders. The feedback will come from research related to common spine issues and simple techniques to provide relief.

No. of Pages : 13 No. of Claims : 2

(12) PATENT APPLICATION PUBLICATION
(21) Application No.202141026714 A
(19) INDIA
(22) Date of filing of Application :16/06/2021
(43) Publication Date : 02/07/2021

(54) Title of the invention : DEVELOPMENT OF END TO END SUPPORTED REINFORCED EARTH EMBANKMENT

(51) International classification	:E02D0029020000, E02D0017180000, E02D0017000000, E02D0029050000, G01B0021320000	(71)**Name of Applicant :** **1)Dr. P. Shivananda** Address of Applicant :#2578 7th Cross, 13th Main,E • Block, Sahakaranangara. Bangalore Karnataka India 560092 Karnataka India
(31) Priority Document No	:NA	(72)**Name of Inventor :**
(32) Priority Date	:NA	**1)Dr. P. Shivananda**
(33) Name of priority country	:NA	**2)Dr. P. Shivananda**
(86) International Application No	:NA	
Filing Date	:NA	
(87) International Publication No	: NA	
(61) Patent of Addition to Application Number	:NA	
Filing Date	:NA	
(62) Divisional to Application Number	:NA	
Filing Date	:NA	

(57) Abstract :
Present Reinforced Earth Embankment construction are becoming very popular. But the load transfer to the end panels by friction mobilization between soil fill and reinforcement. But if soil with less friction, then the design become uneconomical. In present research work reinforcements are provided from End to End (Panel to Panel). By conducting experiments in laboratory with 1m height wall on Regular Reinforced Earth wall and End-to-End Reinforced Earth wall. From the Figure 1 and 2 reveals that the End-to-End Reinforced Earth wall performed well in both reduction in deformation during loading and load carrying capacity for given deformation. It was observed after unloading End-to-End Reinforced Earth wall regained its panel shape compared to Regular Reinforced Earth wall.

No. of Pages : 9 No. of Claims : 1

(12) PATENT APPLICATION PUBLICATION
(21) Application No.202141026720 A
(19) INDIA
(22) Date of filing of Application :16/06/2021
(43) Publication Date : 02/07/2021

(54) Title of the invention : Z-SHAPED GATE HORIZONTAL POCKET DIELECTRIC MODULATED TUNNEL FET (ZHP-DM-TFET) BASED BIOSENSOR

(51) International classification	:H01L0029739000, H01L0029660000, H01L0029060000, H01L0029100000, G01N0027327000	(71)**Name of Applicant :** **1)VIT-AP UNIVERSITY** Address of Applicant :VIT-AP UNIVERSITY, Beside AP Secretariat, Near Vijayawada, Andhra Pradesh, India 522237. Andhra Pradesh India
(31) Priority Document No	:NA	(72)**Name of Inventor :**
(32) Priority Date	:NA	**1)Mr.Nelaturi Nagendra Reddy**
(33) Name of priority country	:NA	**2)Dr.Deepak Kumar Panda**
(86) International Application No	:NA	
Filing Date	:NA	
(87) International Publication No	: NA	
(61) Patent of Addition to Application Number	:NA	
Filing Date	:NA	
(62) Divisional to Application Number	:NA	
Filing Date	:NA	

(57) Abstract :
ABSTRACT OF THE INVENTION In this work, a Z-shaped Gate dielectric modulated (DM) tunnel field-effect transistor (TFET) based biosensor with extended horizontal n+ pocket in the source region is proposed, and performances metrics of the proposed biosensor are investigated. The unique gate structure design, i.e. the Z-shaped Gate, provides an apparent way to include both Effective structural modification effect and the filed induced quantum confinements (FIQC) effects to enhance the device's performances in terms of On current([on) and threshold voltage. The horizontal pocket beneath the source region of the ZHP-DM-TFET biosensor enables vertical tunneling besides the lateral tunneling. The improved tunneling rate enhances the device performance in term of short channel effects, low off the current and high On-current(Ion). A comparative study is also carried with existing biosensors, and it is observed that the ZHP-DM-TFET biosensor shows superiority over the other biosensors due to its unique arrangement of the gate and the horizontal n+ pocket provides an additional tunneling path to increase the rate of tunneling. The device's sensitivity analysis further investigated by varying the dielectric constant of the biomolecules inside the Nano-cavity for the value from K=l to K=10. The ZHP-DM-TFET biosensor shows a significant improvement in threshold voltage sensitivity 20%(k=2), 35%(K=4) than an SP-DM-HTFET, and a 102 improvement in Ion/Ioft ratio. The impact of the thickness of the n+ pocket (Pocket) over the biosensor's sensitivity is also investigated.

No. of Pages : 15 No. of Claims : 6

(12) PATENT APPLICATION PUBLICATION
(19) INDIA
(22) Date of filing of Application :16/06/2021
(21) Application No.202141026721 A
(43) Publication Date : 02/07/2021

(54) Title of the invention : ENHANCED SHAPE MATRIX GENERATION METHOD

(51) International classification	:G06K0009620000, G06K0009000000, G06K0009460000, G06K0009320000, H04N0001000000
(31) Priority Document No	:NA
(32) Priority Date	:NA
(33) Name of priority country	:NA
(86) International Application No	:NA
Filing Date	:NA
(87) International Publication No	: NA
(61) Patent of Addition to Application Number	:NA
Filing Date	:NA
(62) Divisional to Application Number	:NA
Filing Date	:NA

(71)**Name of Applicant :**
1)VIT-AP UNIVERSITY
Address of Applicant :VIT-AP UNIVERSITY, Beside AP Secretariat, Near Vijayawada, Andhra Pradesh, India 522237. Andhra Pradesh India
(72)**Name of Inventor :**
1)Dr. Hari Kishan Kondaveeti
2)Dr. Valli Kumari Vatsavayi

(57) Abstract :
ABSTRACT OF THE INVENTION In general, Object Detection (detecting the presence of an object in an image) and Classification (finding the class of objects to which the identified object belongs to) are two common tasks in Digital Image Processing. Objects may be of our interest like flowers, fruits, shoes, animals, or military targets. To perform classification, objects in an image must be represented in a way that a computer is able to understand that and uses that representation to distinguish two objects. However, this representation should be scale, rotation and translation invariant. We call this representation as invariant representation. Shape matrices are one of the invariant shape representation methods. However, there are some limitations in the existing Shape Matrix representation methods proposed by Goshtasby et al [1] and Vatsavayi et al. [2] such as the quantization of unwanted inner and outer shape details, and distractions in shape representations originated from the improper selection of axis-of-reference.

No. of Pages : 15 No. of Claims : 6

(12) PATENT APPLICATION PUBLICATION
(19) INDIA
(22) Date of filing of Application :16/06/2021
(21) Application No.202141026722 A
(43) Publication Date : 02/07/2021

(54) Title of the invention : E-DOC: A TELE- HEALTH KIOSK

(51) International classification	:G06Q0050220000, A61B0005000000, G16H0080000000, A61B0005010000, G16H0010200000
(31) Priority Document No	:NA
(32) Priority Date	:NA
(33) Name of priority country	:NA
(86) International Application No	:NA
Filing Date	:NA
(87) International Publication No	: NA
(61) Patent of Addition to Application Number	:NA
Filing Date	:NA
(62) Divisional to Application Number	:NA
Filing Date	:NA

(71)**Name of Applicant :**
1)VIT-AP UNIVERSITY
Address of Applicant :VIT-AP UNIVERSITY, Beside AP Secretariat, Near Vijayawada, Andhra Pradesh, India 522237. Andhra Pradesh India
(72)**Name of Inventor :**
1)Ms. Plabini Jibanjyoti Nayak
2)Mr. Kudipudi Rajesh Sai
3)Mr. Niket Chandil
4)Dr. Anoop Kumar Mishra

(57) Abstract :
ABSTRACT OF THE INVENTION: Telehealth can carry long-distance health care, patient and professional health-related guidance, public health and health management using digital information and communication technologies. In this report, a highly efficient system is presented as a convenient, user-friendly, economical solution that can lessen the communication gap between medical professionals and patients residing in rural areas. This medical kiosk helps patients measure, record and send the data over to medical professionals. Doctors can use the Portal (website) to view case data and send out prescriptions. Sensors interfaced with onboard computing systems can measure different health parameters of the patient. The proposed system employs the latest hardware and software embedded technologies to seamlessly transmit data. Specifically designed to suit the Indian Rural environment, the system offers 24 on the go-live language translation voice and text-based UI and also it features equipment usage graphical instruction clips to help users to handle the sensory equipment. This system is equipped with the best self-hardware diagnostic service, which requires no human intervention to manage the sensory tools and system software, everything is connected to the cloud and systems are intelligent enough to re-calibrate them on the go.

No. of Pages : 15 No. of Claims : 4

(12) PATENT APPLICATION PUBLICATION
(21) Application No.202141026724 A
(19) INDIA
(22) Date of filing of Application :16/06/2021
(43) Publication Date : 02/07/2021

(54) Title of the invention : WAPADS-WATER PROGNOSIS AND DECENTRALIZATION SYSTEM

(51) International classification	:G01D0004000000, G01F0015060000, G01F0015075000, H02J0003000000, G06Q0050060000
(31) Priority Document No	:NA
(32) Priority Date	:NA
(33) Name of priority country	:NA
(86) International Application No	:NA
Filing Date	:NA
(87) International Publication No	: NA
(61) Patent of Addition to Application Number	:NA
Filing Date	:NA
(62) Divisional to Application Number	:NA
Filing Date	:NA

(71)**Name of Applicant :**
1)VIT-AP UNIVERSITY
Address of Applicant :VIT-AP UNIVERSITY, Beside AP Secretariat, Near Vijayawada, Andhra Pradesh, India 522237. Andhra Pradesh India
(72)**Name of Inventor :**
1)V. Bharath Kumar
2)M. Kalyan Chakravnrthi

(57) Abstract :
ABSTRACT OF THE INVENTION In the existing backdrop of Water allocation and decentralization mechanisms employed among different nations are entirely dependent on the predetermined static databases. This traditional approach fails in meeting the necessary water consumption demand which is dynamic in nature. The coexisting challenges like improper water utilization, inconvenient water dispensing time and user demand based metering are to be seriously looked into for mitigation of water wastage. In addition to the challenges mentioned there is also a necessity for creating a dynamic computation mechanism which produces accurate predictions of consumer water usage. The proposed Water Prognosis And Decentralization System (WAPADS) IoT device resolves the real-time water distribution challenges and also gives a versatile solution from metering to prognosis of consumer water utility.

No. of Pages : 9 No. of Claims : 6

(12) PATENT APPLICATION PUBLICATION
(21) Application No.202141026725 A
(19) INDIA
(22) Date of filing of Application :16/06/2021
(43) Publication Date : 02/07/2021

(54) Title of the invention : T.A.R.S THE AUTONOMOUS RHAPSODY SPIDER

(51) International classification	:A01G0025160000, G08B0021180000, A01G0007000000, A01G0013020000, A01M0007000000	(71)**Name of Applicant :** **1)VIT-AP UNIVERSITY** Address of Applicant :VIT-AP UNIVERSITY, Beside AP Secretariat, Near Vijayawada, Andhra Pradesh, India 522237. Andhra Pradesh India
(31) Priority Document No	:NA	(72)**Name of Inventor :**
(32) Priority Date	:NA	**1)Mr. Pranav Kompally**
(33) Name of priority country	:NA	**2)Dr. S. Sibi Chakkaravarthy**
(86) International Application No	:NA	
Filing Date	:NA	
(87) International Publication No	: NA	
(61) Patent of Addition to Application Number	:NA	
Filing Date	:NA	
(62) Divisional to Application Number	:NA	
Filing Date	:NA	

(57) Abstract :
ABSTRACT OF THE INVENTION TARS is an all-terrain quadruped specifically designed for Agricultural field and crop health monitoring. The main aim of the project is to leverage this technology in botanical gardens to monitor plant health. The other application of it being monitoring the condition of the crop. T.A.R.S uses unique creep GAIT. It is specially programmed to mimic human and spider movement simultaneously. The program being quite small is written to have tars move over 500 steps at one command. DHT11 records hyperlocal weather data and calculates the health of the plant. This allows farmers/ gardene'rs to know the amount of pesticides to be sprayed/used. Further TARS can detect temperature at any high hyper-local (at a particular point where the TARS is) and detects the humidity (water percentage) and heat index present in the atmosphere. It can be controlled through internet or it can be accessible via Bluetooth. The skeleton is made up of PVA material (Poly Vinyl Alcohol) through 3-D printing.

No. of Pages : 10 No. of Claims : 4

(12) PATENT APPLICATION PUBLICATION
(21) Application No.202141026726 A
(19) INDIA
(22) Date of filing of Application :16/06/2021
(43) Publication Date : 02/07/2021

(54) Title of the invention : CLUSTER NODE FAILURE DETECTION USING A MONITORING DEVICE

(51) International classification	:H04L0012240000, H04L0012260000, G06F0011070000, G06F0011200000, H04L0012703000	(71)**Name of Applicant :** **1)VIT-AP UNIVERSITY** Address of Applicant :VIT-AP UNIVERSITY, Beside AP Secretariat, Near Vijayawada, Andhra Pradesh, India 522237. Andhra Pradesh India
(31) Priority Document No	:NA	(72)**Name of Inventor :**
(32) Priority Date	:NA	**1)Mr. Soma Sekhar Kolisetty**
(33) Name of priority country	:NA	**2)Dr. B. Srinivasa Rao**
(86) International Application No	:NA	
Filing Date	:NA	
(87) International Publication No	: NA	
(61) Patent of Addition to Application Number	:NA	
Filing Date	:NA	
(62) Divisional to Application Number	:NA	
Filing Date	:NA	

(57) Abstract :
ABSTRACT OF THE INVENTION Node Failure Detection in the cluster environment is a challenging task in order to provide continuous services. Nodes fail to work more often and loss communication with the cluster can result in software / hardware failure, network disconnection and state transfer failure. Heartbeat monitoring is a traditional node failure detection approach which can only detect the status of nodes and cannot decide whether a cluster node itself has failed due to failure in a hardware component or a communication path failure between the nodes. The other cluster nodes might not notice the cause of the node failure and presume the failed node is still functioning. To overcome the above stated problems in the traditional approach, a Node Monitoring Device (NMD) is used to determine what cluster node exactly failed and when it has failed. The device will monitor the state change information of each configured node and notify the node failures.

No. of Pages : 10 No. of Claims : 5

(12) PATENT APPLICATION PUBLICATION
(19) INDIA
(22) Date of filing of Application :16/06/2021
(21) Application No.202141026728 A
(43) Publication Date : 02/07/2021

(54) Title of the invention : DYNAMIC SMART ALARM BASED ON QUALITY OF SLEEP (QOS)

(51) International classification	:G04G0013020000, H04N0021472000, G06Q0010040000, G06Q0010000000, H04N0005445000
(31) Priority Document No	:NA
(32) Priority Date	:NA
(33) Name of priority country	:NA
(86) International Application No	:NA
Filing Date	:NA
(87) International Publication No	: NA
(61) Patent of Addition to Application Number	:NA
Filing Date	:NA
(62) Divisional to Application Number	:NA
Filing Date	:NA

(71)**Name of Applicant :**
1)VIT-AP UNIVERSITY
Address of Applicant :VIT-AP UNIVERSITY, Beside AP Secretariat, Near Vijayawada, Andhra Pradesh, India 522237. Andhra Pradesh India
(72)**Name of Inventor :**
1)BKSP Kumar Raju Alluri
2)Prabha Selvaraj
3)N Anupama
4)D Sumathi
5)Aravapalli Rama Satish

(57) Abstract :
Everyday many individuals will have hard deadlines and they can be accomplished based on the proper planning. This planning involves activities specific to an individual and the common across all the users is setting the alarm. In many cases, once the alarm rings in its pre-set time, the users will have a tendency to switch it off and go back to bed and this is more common with kids. This can happen either because of not having sufficient sleep as per the target person (or) user can even switch off because of laziness. The proposed system distinguishes between both the factors by quantifying the sleep and based on this, the alarm time is updated accordingly. The tracker collects the thermal imagery data for motion detection which is aggregated and given as one of the inputs for the quantification of QoS.

No. of Pages : 12 No. of Claims : 6

(12) PATENT APPLICATION PUBLICATION
(21) Application No.202141026729 A
(19) INDIA
(22) Date of filing of Application :16/06/2021
(43) Publication Date : 02/07/2021

(54) Title of the invention : A NOVEL METHOD TO HARVEST ENERGY FROM HEAT GENERATED IN TWO-WHEELER FOR ELECTRICAL USE

(51) International classification	:H02J0007320000, B62J0099000000, B60L0008000000, H02N0011000000, H02N0002180000	(71)**Name of Applicant :** **1)VIT-AP UNIVERSITY** Address of Applicant :VIT-AP UNIVERSITY, Beside AP Secretariat, Near Vijayawada, Andhra Pradesh, India 522237. Andhra Pradesh India
(31) Priority Document No	:NA	(72)**Name of Inventor :**
(32) Priority Date	:NA	**1)Dr. Arun Kumar Sinha**
(33) Name of priority country	:NA	
(86) International Application No	:NA	
Filing Date	:NA	
(87) International Publication No	: NA	
(61) Patent of Addition to Application Number	:NA	
Filing Date	:NA	
(62) Divisional to Application Number	:NA	
Filing Date	:NA	

(57) Abstract :
ABSTRACT OF THE INVENTION In modern days, the need to harvest energy has become important issue to reduce dependency on nonrenewable fuel. Researcher have converted renewable energy (i.e., solar, wind, thermal, vibration etc.) using harvesting techniques into electrical energy so that the human beings can suitably use it. In the present patent idea applied to a 2-wheeler running on petrol/diesel fuel. The heat energy generated by the engine present around the exhaust pipe can be converted into the electrical energy through the transducer and the intermediate electronic circuitry. With the increasing demand of electrical energy like charging phones, headlights, sensors etc., by the user riding a motorcycle. The present idea can help to meet the need without too much load on the alternator therefore can help to save the fuel consumption.

No. of Pages : 10 No. of Claims : 5

(12) PATENT APPLICATION PUBLICATION
(19) INDIA
(22) Date of filing of Application :16/06/2021
(21) Application No.202141026746 A
(43) Publication Date : 02/07/2021

(54) Title of the invention : DETECTION OF GLAUCOMA USING IMAGE PROCESSING

(51) International classification	:G06K0009620000, G06T0007000000, A61B0003120000, G06T0007136000, A61B0003000000
(31) Priority Document No	:NA
(32) Priority Date	:NA
(33) Name of priority country	:NA
(86) International Application No	:NA
Filing Date	:NA
(87) International Publication No	: NA
(61) Patent of Addition to Application Number	:NA
Filing Date	:NA
(62) Divisional to Application Number	:NA
Filing Date	:NA

(71)**Name of Applicant :**
1)Dr. A. NARASIMA VENKATESH
Address of Applicant :ASSOCIATE PROFESSOR MBA - DEPARTMENT OF HUMAN RESOURCE MANAGEMENT RV INSTITUTE OF MANAGEMENT CA 17, 36TH CROSS ROAD, 26TH MAIN, 4TH 'T' BLOCK, JAYANAGAR, BANGALORE - 560 041 Karnataka India
2)Dr. B.GOPINATH
3)Dr. AJAY SINGH YADAV
4)Dr. A. GOVINDARAJAN
5)Ms. R.PAVAIYARKARASI
6)Dr.REVANNA C R
7)Mr. M. SREENANDAN REDDY
8)Dr.KRISHNA KUMAR.N.J
9)Dr. RAJESH DODIYA
10)Mr. P RAMESH NAIDU
(72)**Name of Inventor :**
1)Dr. A. NARASIMA VENKATESH
2)Dr. B.GOPINATH
3)Dr. AJAY SINGH YADAV
4)Dr. A. GOVINDARAJAN
5)Ms. R.PAVAIYARKARASI
6)Dr.REVANNA C R
7)Mr. M. SREENANDAN REDDY
8)Dr.KRISHNA KUMAR.N.J
9)Dr. RAJESH DODIYA
10)Mr. P RAMESH NAIDU

(57) Abstract :
ABSTRACT IMAGE PROCESSING FRAMEWORK FOR DETECTION IN GLAUCOMA ANALYSIS This invention emphasis on detection of Glaucoma based on Cup to Disc Ratio and ISNT rule. The proposed project involves pre-processing, optic cup segmentation, optic disc segmentation and evaluation of CDR and ISNT. The OD is segmented from the fundus images obtained from RIM-ONE database using segmentation techniques such as mean, global and Otsu thresholding. The OC is segmented using Otsu thresholding and K-means clustering. The results of segmentation are compared with ground truth using Jaccard similarity measures and the best segmentated result is obtained. The segmented OD and OC are analyzed for CDR and ISNT rule. Based on the results of the CDR and ISNT rule evaluation the retinal images are classified as normal or abnormal and the stages of severity of glaucoma are identified.

No. of Pages : 30 No. of Claims : 5

(12) PATENT APPLICATION PUBLICATION
(19) INDIA
(22) Date of filing of Application :16/06/2021
(21) Application No.202141026750 A
(43) Publication Date : 02/07/2021

(54) Title of the invention : COMPUTER-AIDED DRUG DESIGN AND GREEN SYNTHESIS OF NOVEL PYRAZOLE ANALOGUES AS POTENTIAL SARS-COV-2 MAIN PROTEASE INHIBITORS AGAINST ANTI-COVID-19 PROTEIN TARGETS

(51) International classification	:C12Q0001700000, A61K0031470600, C07C0231020000, A61K0031703600, A61B0005040200
(31) Priority Document No	:NA
(32) Priority Date	:NA
(33) Name of priority country	:NA
(86) International Application No	:NA
Filing Date	:NA
(87) International Publication No	: NA
(61) Patent of Addition to Application Number	:NA
Filing Date	:NA
(62) Divisional to Application Number	:NA
Filing Date	:NA

(71)**Name of Applicant :**
1)SANTHOSH GOVINDARAJU
Address of Applicant :Department of Sciences and Humanities, CHRIST (Deemed to be University), Bengaluru, Karnataka - 560074, India. Karnataka India
2)SUMAIYA TABASSUM
3)SAMPATH CHINNAM
4)KAVITA KHATANA
5)ISHWARYA LAKSHMI KONATHALA
6)HARITHA ARNIPALLI
(72)**Name of Inventor :**
1)SANTHOSH GOVINDARAJU
2)SUMAIYA TABASSUM
3)SAMPATH CHINNAM
4)KAVITA KHATANA
5)ISHWARYA LAKSHMI KONATHALA
6)HARITHA ARNIPALLI

(57) Abstract :
COVID-19 pandemic has significantly increased high deaths, infectivity and hospitalizations. Severe acute respiratory syndrome coronavirus 2 (SARS-CoV-2) is a foremost problem in the world presently. Currently, all research institutions and pharmaceutical industries are keen in developing new vaccines and more effective drugs that could inhibit the SARS-CoV-2 virus and help in the treatment of patients. This provoked us to design medicinally effective drug candiadates which can prevent the SARS-CoV-2 virus of the infected patients. The present invention offers most promising anti-viral drugs docked against anti-COVID-19 protein targets: SARS-CoV-2 main protease, efficacy, drug-likeness, molecular docking, BOILED-EGG model, physicochemical and pharmacokinetic studies of novel synthesized polysubstituted 4,7-dihydro-1H-pyrazolo[3,4-b]pyridin-6-amine analogues. All the novel synthesized analogues including commercially available anti-COVID-19 drugs, Hydroxychloroquine and Umifenovir docked with anti-COVID-19 protein targets, i.e., PDB: 6LU7 and 6Y2E. This current invention further provides a rapid access to novel 4,7-dihydro-1H-pyrazolo[3,4-b]pyridin-6-amines and few advantages are milder reaction conditions, short reaction times, easy work-up, excellent yields, effective SARS-CoV-2 main protease inhibitors and use of ultrasonic radiation via green synthesis.

No. of Pages : 25 No. of Claims : 7

(12) PATENT APPLICATION PUBLICATION
(19) INDIA
(22) Date of filing of Application :16/06/2021
(21) Application No.202141026781 A
(43) Publication Date : 02/07/2021

(54) Title of the invention : ATITHIHAPPINESS SYSTEM HOTEL MANAGEMENT

(51) International classification	:G06Q0030020000, G06Q0050120000, G06Q0010060000, G06Q0030000000, G06Q0050140000
(31) Priority Document No	:NA
(32) Priority Date	:NA
(33) Name of priority country	:NA
(86) International Application No	:NA
Filing Date	:NA
(87) International Publication No	: NA
(61) Patent of Addition to Application Number	:NA
Filing Date	:NA
(62) Divisional to Application Number	:NA
Filing Date	:NA

(71)**Name of Applicant :**
1)Dr. T.MILTON
Address of Applicant :Designation- Dean, Tourism and Hospitality Management Department: Tourism and Hospitality Management Institution: Bharath Institute of Higher Education & Research, 173, Agaram Road, Selaiyur, Chennai 600073. Ph-9884143887,8072406672 Mail id- tmilton1971@gmail.com Years of experience-29 Qualification- BA, DHMCT & AN,MTM, MHRM,M.Phil, MBA, NET, Ph.D Area of interest- Tourism and Hospitality Management Tamil Nadu India
2)Dr. R.KANNAN
3)P. MANIKANDAN
(72)**Name of Inventor :**
1).

(57) Abstract :
TITLE OF INVENTION: AtithiHappiness System Hotel Management Field of Invention Tourism and Hotel Management
ABSTRACT AtithiHappiness System provides a customer-centric approach that creates a meaningful and memorable experience for hotel visitors. It helps the management to provide customers with a satisfactory experience, promoting their return rate. The Invention focuses on actionable insights and leads to increased productivity due to the quick identification of faulty departments. This has refined the service standards of hotels for a better customer experience. The Invention Measures customers satisfaction, Improve Hotel™s Products & Services, Improve the Hotel™s Staff Behaviour and Hospitality, Improve Customer Retention, Get More Referrals and Build Reputation, Shows You Value the Customer™s Opinions & Help Make Data-Driven Decisions. The Invention identifies unsatisfied customers and alerts the staff for better services in the areas of improvement based on customized choices. The Invention uses Artificial Intelligence and Decision Trees structure for quick action to be taken depending on the critical situation. The Invention ensures the happiness of the customer and ensures Continuous Improvements in Quality delivery.

No. of Pages : 10 No. of Claims : 2

(12) PATENT APPLICATION PUBLICATION
(21) Application No.202141026800 A
(19) INDIA
(22) Date of filing of Application :16/06/2021
(43) Publication Date : 02/07/2021

(54) Title of the invention : IOE BASED INTELLIGENT ELECTRONIC DISPLAY SYSTEM

(51) International classification	:G06Q0010100000, H04H0020140000, G09F0027000000, F16M0011420000, G09F0023000000	(71)**Name of Applicant :** **1)Dr. S. KANNAN** Address of Applicant :Assistant Professor, Department of Electronics and Communication Systems, Nehru Arts and Science College (Autonomous), Coimbatore 641105 Tamilnadu. Ph: 9443116765 E-Mail: drsk21p1@gmail.com Tamil Nadu India
(31) Priority Document No	:NA	**2)Dr. A. BALAMURUGAN**
(32) Priority Date	:NA	**3)D. ANTONY PRADEESH**
(33) Name of priority country	:NA	**4)Dr. M. SATHISHKUMAR**
(86) International Application No	:NA	**5)S. ANANDASARAVANAN**
Filing Date	:NA	(72)**Name of Inventor :**
(87) International Publication No	: NA	**1)Dr. S. KANNAN**
(61) Patent of Addition to Application Number	:NA	**2)Dr. A. BALAMURUGAN**
Filing Date	:NA	**3)D. ANTONY PRADEESH**
(62) Divisional to Application Number	:NA	**4)Dr. M. SATHISHKUMAR**
Filing Date	:NA	**5)S. ANANDASARAVANAN**

(57) Abstract :
ABSTRACT OF THE INVENTION In prior to the existing display systems, it was the conventional notice boards made used for conveying information with people in a defined space, say it as organizations and institutions. Later, the technology advancements had evolved the usage of display system that are in use these days. Despite, the motto of the display system remains the same, the design of each and every system varies depending upon the requirements of customer, environment and manufacturers. In this propounded invention, display system comprises of a single board computer Orange Pi which is used to handle the data that are to be processed and further controlled. The Board used consists of advanced features which is used to interface the video display, audio and video port, camera interface, Wi-Fi port and HDMI. Using these features, the advanced functionalities has been added with the existing ones, to make it more informative and likable for the targets. Such as, the display devices are used to display the visual information, speaker to play the audio files, sensor to detect the person to make display on availability and face recognition system to interface the attendance monitoring system. All information is made available on the cloud by saving the data of history for future orientations. Also, the most vital features enabled in this system is it works over Internet of Everything, which assured that all the devices connected to the host and vice versa. Therefore, to provide a secure, instant informations to the targets, this invention of IoE based intelligent Electronic display system will be helpful to enhance the quality and functionalities of the existing electronic display system on board.

No. of Pages : 15 No. of Claims : 9

(12) PATENT APPLICATION PUBLICATION
(19) INDIA
(22) Date of filing of Application :16/06/2021

(21) Application No.202141026824 A
(43) Publication Date : 02/07/2021

(54) Title of the invention : SENSOR BASED INTELLIGENT ROBOTIC ARM TO VACCINATE PEOPLE AGAINST COVID-19

(51) International classification	:A61K0039000000, A61B0005000000, G16H0050300000, B25J0019020000, G16H0020000000
(31) Priority Document No	:NA
(32) Priority Date	:NA
(33) Name of priority country	:NA
(86) International Application No	:NA
Filing Date	:NA
(87) International Publication No	: NA
(61) Patent of Addition to Application Number	:NA
Filing Date	:NA
(62) Divisional to Application Number	:NA
Filing Date	:NA

(71)**Name of Applicant :**
1)Mustafa Musa Jaber
Address of Applicant :Dijlah University College, Massafi st. Doura, Baghdad, 10021, Iraq Iraq
2)Prof. (Dr.) Sudhir Kumar Sharma
3)Dr. Raja Sarath Kumar Boddu
4)Dr Balbir Singh
5)Dr. M Jagadish Kumar
6)Naveen Hemrajani
7)Dr.K.Dhayalini
8)Dr. Anirban Das
9)Sura Khalil Abd
10)Dr. Pavithra G
11)Dr. Ravi Kumar
12)Dr.S.Balamurugan
(72)**Name of Inventor :**
1)Mustafa Musa Jaber
2)Prof. (Dr.) Sudhir Kumar Sharma
3)Dr. Raja Sarath Kumar Boddu
4)Dr Balbir Singh
5)Dr. M Jagadish Kumar
6)Naveen Hemrajani
7)Dr.K.Dhayalini
8)Dr. Anirban Das
9)Sura Khalil Abd
10)Dr. Pavithra G
11)Dr. Ravi Kumar
12)Dr.S.Balamurugan

(57) Abstract :
The Sensor Based Intelligent Robotic Arm to Vaccinate People against COVID-19 (SIRA) helps the government/hospital to make use of the SIRA to vaccinate the patient in a contactless manner by automatically checking the health conditions of the patient using temperature, humidity, and face recognition sensors. The COVID-19 vaccine syringe helps to inject the vaccine to the patient by a robot. The robot arm handles the syringe in a contactless manner to avoid the spread of the viruses to the doctors/nurses. The revolvable arm helps to move/fold the robot arm in all the angles. The calibration unit measures the various values. The conveyor belt is assisting the robot by rolling out the syringe continuously one by one. The battery supports the continuous function of the robot every time. The temperature, humidity, and face recognition sensors are measuring the patient health values and decide whether the patient is fit to take the vaccine or not. If the patient is fit then the robot vaccinates the patient else recommends for future dates. The SIRA control unit helps to monitoring and managing the successful functioning of the whole SIRA system. By using this SIRA, the government/hospitals to make use of the SIRA to vaccinate the patient in a contactless manner by automatically checking the health conditions of the patient using temperature, humidity, and face recognition sensors.

No. of Pages : 16 No. of Claims : 3

(12) PATENT APPLICATION PUBLICATION
(19) INDIA
(22) Date of filing of Application :16/06/2021
(21) Application No.202141026907 A
(43) Publication Date : 02/07/2021

(54) Title of the invention : METHOD OF FABRICATING A FUNCTIONAL ELECTRODE

(51) International classification	:B82Y0030000000, B33Y0080000000, H01M0004920000, H01M0004900000, B01J0023745000
(31) Priority Document No	:NA
(32) Priority Date	:NA
(33) Name of priority country	:NA
(86) International Application No	:NA
Filing Date	:NA
(87) International Publication No	: NA
(61) Patent of Addition to Application Number	:NA
Filing Date	:NA
(62) Divisional to Application Number	:NA
Filing Date	:NA

(71)**Name of Applicant :**
1)CHAITANYA LEKSHMI INDIRA
Address of Applicant :HEAD COES: MATERIALS SCIENCE/ SENSORS & NANOELECTRONICS, DEPARTMENT OF CHEMISTRY, CMR INSTITUTE OF TECHNOLOGY, 132 AECS LAYOUT, IT PARK ROAD, KUNDALAHALLI P.O., BENGALURU, 560037, KARNATAKA, INDIA Karnataka India
(72)**Name of Inventor :**
1)CHAITANYA LEKSHMI INDIRA
2)RAHUL PILLAI
3)PREETHA S.
4)B. NARASIMHAMURTHY

(57) Abstract :
A method of fabricating a functional electrode is disclosed. The method includes synthesizing a supporting framework of a predefined shape using an additive manufacturing technique. The supporting framework is composed of first predefined material. The method also includes coating or attaching the supporting framework with a conducting layer composed of second predefined material for obtaining an electrode template. Further, the method also includes depositing a predefined amount of a catalytic composite in a predefined form onto a surface or inside of the electrode template for obtaining the functional electrode. The catalytic composite includes a nanocomposite of one or more nanostructured particles including at least one of one or more transition metal oxides with doping or without doping, one or more perovskites, carbon nanotubes, one or more biomolecules, and one or more polymers. Moreover, the method is cost-effective and easier to implement in case of bulk production of such functional electrodes. FIG. 1

No. of Pages : 35 No. of Claims : 10

(12) PATENT APPLICATION PUBLICATION
(21) Application No.202141026910 A
(19) INDIA
(22) Date of filing of Application :16/06/2021
(43) Publication Date : 02/07/2021

(54) Title of the invention : SYSTEM FOR HYBRID SWITCH ASSEMBLY AND ROTARY SWITCH ASSEMBLY FOR CONTROLLING APPLIANCES

(51) International classification	:H01H0009540000, H01H0019110000, H01H0025040000, H01H0019060000, H01H0036000000	(71)**Name of Applicant :** **1)NIKHIL KACHATTIYAWAR** Address of Applicant :S/O VIJAYKUMAR, #13 HEBBALLI LAYOUT, KUMARVYAS NAGAR, HUBLI, 580031, KARNATAKA, INDIA Karnataka India
(31) Priority Document No	:NA	(72)**Name of Inventor :**
(32) Priority Date	:NA	**1)NIKHIL KACHATTIYAWAR**
(33) Name of priority country	:NA	
(86) International Application No	:NA	
Filing Date	:NA	
(87) International Publication No	: NA	
(61) Patent of Addition to Application Number	:NA	
Filing Date	:NA	
(62) Divisional to Application Number	:NA	
Filing Date	:NA	

(57) Abstract :
A system (10) for hybrid switch assembly and rotary switch assembly for controlling appliances is disclosed. The system (10) includes an electronic control unit (20) to interface input signals supplied to switch assembly (30) and a rotary switch assembly (40). The switch assembly includes switching arm mechanically coupled to an electrical switch knob (60) to perform a switching operation of an appliance and the rotary switch assembly includes an actuating arm (90) to rotate a rotary switch knob (110) upon receiving input signals from the electronic control unit. The rotary switch assembly includes a potentiometer (120) to estimate relative positions of the rotary switch knob. The system (10) includes a processing unit (141) to send a switching command and a rotary command received through a user interface (142) to a switch assembly and a rotary switch assembly respectively to the electronic control unit for controlling the appliances connected to switch assembly and rotary switch assembly. FIG. 1

No. of Pages : 43 No. of Claims : 11

(12) PATENT APPLICATION PUBLICATION
(21) Application No.202141026921 A
(19) INDIA
(22) Date of filing of Application :16/06/2021
(43) Publication Date : 02/07/2021

(54) Title of the invention : AN ARTIFICIALLY INTELLIGENT SYSTEM FOR REAL-TIME MONITORING OF GLUCOSE AND OTHER INTRAVENOUS (I.V) INFUSIONS

(51) International classification	:A61M0005168000, A61B0005145000, A61B0005000000, A61G0012000000, A61B0005145500
(31) Priority Document No	:NA
(32) Priority Date	:NA
(33) Name of priority country	:NA
(86) International Application No	:NA
Filing Date	:NA
(87) International Publication No	: NA
(61) Patent of Addition to Application Number	:NA
Filing Date	:NA
(62) Divisional to Application Number	:NA
Filing Date	:NA

(71)**Name of Applicant :**
1)Dr. D VINOD KUMAR
Address of Applicant :S/o. K DHAKSHNAMURTHY, PROFESSOR & HEAD, DEPARTMENT OF BIOMEDICAL ENGINEERING, VINAYAKA MISSION'S KIRUPANADA VARIYAR ENGINEERING COLLEGE, VINAYAKA MISSION'S RESEARCH FOUNDATION (DEEMED TO BE UNIVERSITY), SALEM - 636308, TAMIL NADU, INDIA Tamil Nadu India
2)Dr. D BASKAR
3)Dr. B ARUL
4)Dr. R KOTHAI
5)Dr. A SAM THAMBURAJ
6)Dr. J JEBA EMILYN
(72)**Name of Inventor :**
1)Dr. D VINOD KUMAR
2)Dr. D BASKAR
3)Dr. B ARUL
4)Dr. R KOTHAI
5)Dr. A SAM THAMBURAJ
6)Dr. J JEBA EMILYN

(57) Abstract :
In recent days, patients are increased due to various reasons, so in most hospitals, the doctors/nurses are struggled to give care for more no. patients. Unfortunately, for some individuals, doctors cannot monitor the patients due to more number of patients, so, most of the time one person needs to monitor the glucose dripping inpatient side and he wants to inform the doctor to cut off and exchange another bottle. So, the inventor decides to develop a mechanism for digitally control, monitoring and information to the doctor/nurses. In an embodiment, the invention has one glucose intravenous (IV) infusion monitoring system; this apparatus monitors the glucose flow amount in the tube for calculating the remaining glucose level in the bottle; wherein another apparatus controls and cutoffs the glucose. This system helps to properly care for the patients without fail and also eliminates the requirement of another person for watching glucose level near the patient.

No. of Pages : 25 No. of Claims : 9

(12) PATENT APPLICATION PUBLICATION
(19) INDIA
(22) Date of filing of Application :16/06/2021

(21) Application No.202141026938 A
(43) Publication Date : 02/07/2021

(54) Title of the invention : DEEP LEARNING BASED SYSTEM AND METHOD FOR DETECTION OF FACEMASK

(51) International classification	:A41D0013110000, G06K0009000000, G06N0003080000, A61M0016060000, G06N0003040000
(31) Priority Document No	:NA
(32) Priority Date	:NA
(33) Name of priority country	:NA
(86) International Application No	:NA
Filing Date	:NA
(87) International Publication No	: NA
(61) Patent of Addition to Application Number	:NA
Filing Date	:NA
(62) Divisional to Application Number	:NA
Filing Date	:NA

(71)**Name of Applicant :**
1)Y JUSTIN DHAS
Address of Applicant :S/o. S YESU DHASAN, DEPARTMENT OF COMPUTER SCIENCE AND ENGINEERING, EASWARI ENGINEERING COLLEGE, BHARATHI SALAI, RAMAPURAM, CHENNAI 600089, TAMIL NADU, INDIA. Tamil Nadu India
2)A SONYA
3)Dr. S AHAMED ALI
4)Dr. P SANTHOSH KUMAR
5)M ADITHI MOOKAMBAL
6)Dr. C SUNITHA RAM
7)S GOKULAKRISHNAN
8)R PREMA
9)M GAYATHRI
10)D ANANDAN
(72)**Name of Inventor :**
1)Y JUSTIN DHAS
2)A SONYA
3)Dr. S AHAMED ALI
4)Dr. P SANTHOSH KUMAR
5)M ADITHI MOOKAMBAL
6)Dr. C SUNITHA RAM
7)S GOKULAKRISHNAN
8)R PREMA
9)M GAYATHRI
10)D ANANDAN

(57) Abstract :
The COVID-19 pandemic forced governments across the world to impose lockdowns to prevent virus transmissions. Reports indicate that wearing face masks while at work clearly reduces the risk of transmission. An efficient and economic approach of using AI to create a safe environment in a manufacturing setup. A hybrid model using deep and classical machine learning for face mask detection is disclosed in the present invention. A face mask detection dataset consists of with mask and without mask images. The invention is to identify whether the person on image/video stream is wearing a face mask or not with the help of computer vision and deep learning.

No. of Pages : 21 No. of Claims : 3

(12) PATENT APPLICATION PUBLICATION
(21) Application No.202141026963 A
(19) INDIA
(22) Date of filing of Application :17/06/2021
(43) Publication Date : 02/07/2021

(54) Title of the invention : AUTOMATIC BLOOD GROUP IDENTIFICATION DEVICE

(51) International classification	:G01N0033800000, G06K0009000000, H04N0019177000, G06Q0050260000, G16H0010650000
(31) Priority Document No	:NA
(32) Priority Date	:NA
(33) Name of priority country	:NA
(86) International Application No	:NA
Filing Date	:NA
(87) International Publication No	: NA
(61) Patent of Addition to Application Number	:NA
Filing Date	:NA
(62) Divisional to Application Number	:NA
Filing Date	:NA

(71)**Name of Applicant :**
1)Ajit Danti (Professor)
Address of Applicant :A807, Gopalan Olympia, Kumbalgodu-Post, Mysore Road, Bangalore-560074. Dept. of Computer Science & Engg, School of Engineering & Technology Christ University, Kengeri Campus, Bangalore-74 E-mail : ajitdanti@yahoo.com Mobile: 7899198151 Karnataka India
2)Kumari K
3)Rakshith Danti
(72)**Name of Inventor :**
1)Ajit Danti (Professor)
2)Kumari K
3)Rakshith Danti

(57) Abstract :
ABSTRACT Our invention Automatic Blood Group Identification Device is an event of a coffee price image process system that enables the determination of human blood sorts. to see the blood sorts, it had been used the plate check that accommodates the mixture antigens specifics of blood sorts determination and also the sample blood of the donor. The mixtures blood/antigens area unit captured through a PI camera and analyze the victimization of the package from computer vision and machine learning techniques. The bestowed approach permits up the general public health potency as there's not however offered affordable industrial instrumentality to see blood sorts in an emergency scenario. The image process techniques like thresholding and morphological operations area unit used. The pictures of the slide check area unit obtained from the blood sample area unit processed and the incidence of agglutination area unit evaluated. So, the developed machine-driven technique determines the blood sort using image process techniques. The developed technique is helpful in emergency scenario to verify the blood cluster while not human error. Determining people in an emergency scenario is extremely vital. The method of sleuthing specific people of human is thought as diagnosis. Every one ought to apprehend their people and it's necessary. Throughout transfusion of blood, donating blood, road disaster and different imperative things inquiring regarding the precise people in brief time span is extremely vital.

No. of Pages : 13 No. of Claims : 10

(12) PATENT APPLICATION PUBLICATION
(21) Application No.202141026964 A
(19) INDIA
(22) Date of filing of Application :17/06/2021
(43) Publication Date : 02/07/2021

(54) Title of the invention : ISSE- BUILDING MANAGEMENT: INTELLIGENT BUILDING MANAGEMENT SYSTEM FOR SMART ENERGY GRID.

(51) International classification	:G05B0015020000, H02J0003380000, H02J0013000000, H02J0007350000, B60L0008000000
(31) Priority Document No	:NA
(32) Priority Date	:NA
(33) Name of priority country	:NA
(86) International Application No	:NA
Filing Date	:NA
(87) International Publication No	: NA
(61) Patent of Addition to Application Number	:NA
Filing Date	:NA
(62) Divisional to Application Number	:NA
Filing Date	:NA

(71)**Name of Applicant :**
1)Dr. D. Pavan Kumar (Assistant Professor (Ad-hoc))
Address of Applicant :Civil Engineering Department, JNTUACEA, Anantapur, India. E-mail : pavan.devaraj@gmail.com Andhra Pradesh India
2)Mr. Yogesh Deepak Nagvekar
3)Dr. K.V.G.D. Balaji (Distinguished Professor)
4)Dr. K. Srinivasan (Associate Professor)
5)Dr. M. C. Sashikkumar (Assistant Professor and Head)
6)Prof. (Dr.) Biplab Kumar Sarkar (International Patent Motivational Speaker)
(72)**Name of Inventor :**
1)Dr. D. Pavan Kumar (Assistant Professor (Ad-hoc))
2)Mr. Yogesh Deepak Nagvekar
3)Dr. K.V.G.D. Balaji (Distinguished Professor)
4)Dr. K. Srinivasan (Associate Professor)
5)Dr. M. C. Sashikkumar (Assistant Professor and Head)
6)Prof. (Dr.) Biplab Kumar Sarkar (International Patent Motivational Speaker)

(57) Abstract :
ABSTRACT Our invention is to a ISSE- building management: intelligent building management system for smart energy grid is a building management system for one or more buildings, having a processor and a display for showing a model of a building being managed. The invented model may be shown as a 3-D dimensional depiction or rendition, or a virtual building and also a database may provide information regarding sensors, actuators and other items which may be viewed in conjunction with the displayed model. The of power generation units may include a solar power generation unit, a wind power generation unit, a hydro power generation unit, and a fuel-based power generation unit and the main controller is electrically coupled to the plurality of power generation units, the inverter controller, and the power storage device. The monitors DC electrical power generation by the plurality of power generation units, monitors DC electrical power received by the inverter, measures charge of the power storage device, and directs DC electrical power from the power storage device to the inverter. The invention is a nature of the system and its applications allows the effective use of wireless communications systems and the like where they would otherwise not be possible. The invented technology is also a information regarding the location and status of the sensors, control devices, and the like, which may be points of interest, may be mapped on the virtual depiction or model of the building.

No. of Pages : 16 No. of Claims : 7

(12) PATENT APPLICATION PUBLICATION
(19) INDIA
(22) Date of filing of Application :17/06/2021
(21) Application No.202141026978 A
(43) Publication Date : 02/07/2021

(54) Title of the invention : DRONE SURVILLENCE SYSTEM DRONE GUARDS

(51) International classification :G06F0003034600, G08B0013196000, H04N0007180000, A61K0038000000, G06T0007292000
(31) Priority Document No :NA
(32) Priority Date :NA
(33) Name of priority country :NA
(86) International Application No :NA
Filing Date :NA
(87) International Publication No : NA
(61) Patent of Addition to Application Number:NA
Filing Date :NA
(62) Divisional to Application Number :NA
Filing Date :NA

(71)**Name of Applicant :**
1)DR. SUBBURAJ S. V
Address of Applicant :50F, Krishna Street, SRV Nagar, Thirunagar PO Madurai Tamilnadu India 626006 Tamil Nadu India
2)DR. MAHIZHARUVI P
3)DR. MUTHUSAMY ARUMUGAM
4)DR.T.RAMAPRABHA
5)P. K. MANOJKUMAR
6)DR VIJAYAKUMARI RODDA
7)DR D SRIPRIYA
8)DR. PREETI SHARMA
9)DR.SIVAKUMAR G
10)NAZEER SHAIK
(72)**Name of Inventor :**
1)DR. SUBBURAJ S. V
2)DR. MAHIZHARUVI P
3)DR. MUTHUSAMY ARUMUGAM
4)DR.T.RAMAPRABHA
5)P. K. MANOJKUMAR
6)DR VIJAYAKUMARI RODDA
7)DR D SRIPRIYA
8)DR. PREETI SHARMA
9)DR.SIVAKUMAR G
10)NAZEER SHAIK

(57) Abstract :
Country like india where surveillance plays a major role and its atmost important. Plenty of surveillance devices are available and people tend to used it based on their requirements. Every surveillance devices has its own merits and demerits. The major observation found with the existing surveillance device are the data store and time taken for tracking information. In this invention, drone guard is introduced that has two sensors for movement tracking and identifying object tracking in a specific location. Such design helps to retrieve information within stipulated timing and the only tracked information™s are stored in the data store. Motion tracking sensor is implemented for tracking movement and infrared thermopile sensor is used to track object. Hence the invention declares that these drone guards acts as a secure agent for tracking and storing tracked information based on object movement and thus reduces massive data store.

No. of Pages : 9 No. of Claims : 4

(12) PATENT APPLICATION PUBLICATION
(19) INDIA
(22) Date of filing of Application :17/06/2021
(21) Application No.202141027047 A
(43) Publication Date : 02/07/2021

(54) Title of the invention : ALL-TERRAIN VEHICLE HAVING ENHANCED WHEEL ALIGNMENT SYSTEM

(51) International classification	:B60G0003200000, B60G0009020000, B62D0055065000, B62D0063060000, G11B0033120000
(31) Priority Document No	:NA
(32) Priority Date	:NA
(33) Name of priority country	:NA
(86) International Application No	:NA
Filing Date	:NA
(87) International Publication No	: NA
(61) Patent of Addition to Application Number	:NA
Filing Date	:NA
(62) Divisional to Application Number	:NA
Filing Date	:NA

(71)**Name of Applicant :**
1)Gokaraju Rangaraju Institute of Engineering and Technology
Address of Applicant :Bachupally, Nizampet Road, Kukatpally, Hyderabad-500090, India Telangana India
(72)**Name of Inventor :**
1)GOGULAMUDI Pradeep Reddy
2)TATA Jagannadha Swamy
3)KOLANTI Vijay Kumar

(57) Abstract :
An all-terrain vehicle (10) includes each of the semi-trailing arms (14, 16, 18, 20) having a first end (17, 19, 24, 26) pivotably coupled to corresponding sides of the chassis (12). Each of the shock absorbing members (30, 32, 34, 36) includes a first end (31, 33, 42, 44) pivotably coupled to the corresponding first side (22) and second side (28) of the chassis (12). Each of the shock absorbing members (30, 32, 34, 36) includes a second end (42, 44, 50, 52) pivotably coupled to a corresponding second end (46, 48, 54, 56) of each of the semi-trailing arms (14, 16, 18, 20) respectively. The all-terrain vehicle (10) includes inverted arms (58, 60, 62, 64) pivotably coupled respectively to the second end (46, 48, 54, 56) of each of the semi-trailing arms (14, 16, 18, 20) respectively and provided with corresponding pairs of rotatable wheels (74, 76, 78, 80). To be illustrated with FIG. 1.

No. of Pages : 30 No. of Claims : 11

(12) PATENT APPLICATION PUBLICATION
(21) Application No.202141027048 A
(19) INDIA
(22) Date of filing of Application :17/06/2021
(43) Publication Date : 02/07/2021

(54) Title of the invention : SMART PEN-BASED IOT NETWORK TO SECURE ONLINE EXAMINATION

(51) International classification	:H04L0029060000, H04L0029080000, G06Q0020040000, G06F0003035400, G06F0021350000
(31) Priority Document No	:NA
(32) Priority Date	:NA
(33) Name of priority country	:NA
(86) International Application No	:NA
Filing Date	:NA
(87) International Publication No	: NA
(61) Patent of Addition to Application Number	:NA
Filing Date	:NA
(62) Divisional to Application Number	:NA
Filing Date	:NA

(71)**Name of Applicant :**
1)Kavitha S Patil
Address of Applicant :D/N -57, 2nd Cross, 2nd Block, P&T Colony, RT Nagar, Bangalore, Karnataka 560032 Karnataka India
2)Binu Dennis
3)Rajakumar B. R.
(72)**Name of Inventor :**
1)Kavitha S Patil
2)Binu Dennis
3)Rajakumar B. R.

(57) Abstract :
The main objective of the present invention is to provide a smart pen for securing online examinations, and detecting whether the user is a genuine writer or not. The main design of our invention discloses the smart pen-based IoT network to secure online examination. Initially, when the user starts the exam, the camera also starts automatically to record the video of the user and surrounding area. After that, the genuine detector identifies whether the user is an authorized user or not. Also, detects the electronic devices or study materials around the user. Subsequently, the optical character recognition creates the document based on the user™s written contents. Then, the plagiarism detector detects whether the written contents are taken from the website or not. If the user™s device is hacked by others, then the hacker detector detects it and passes the information to the server. Thus, the smart pen identifies whether the user is a genuine writer or not. [To be published with Figure.1]

No. of Pages : 17 No. of Claims : 5

(12) PATENT APPLICATION PUBLICATION
(19) INDIA
(22) Date of filing of Application :17/06/2021
(21) Application No.202141027057 A
(43) Publication Date : 02/07/2021

(54) Title of the invention : SMART PHARMA DRUG LOCATOR

(51) International classification	:G06Q0030040000, G06Q0050220000, H04M0015000000, G16H0040200000, G16H0020130000
(31) Priority Document No	:NA
(32) Priority Date	:NA
(33) Name of priority country	:NA
(86) International Application No	:NA
Filing Date	:NA
(87) International Publication No	: NA
(61) Patent of Addition to Application Number	:NA
Filing Date	:NA
(62) Divisional to Application Number	:NA
Filing Date	:NA

(71)**Name of Applicant :**
1)Mr.P.Kathirvel
Address of Applicant :Dept. of Electronics and Instrumentation Engineering, Dr. Mahalingam College of Engineering and Technology, Pollachi, Coimbatore, TamilNadu. Tamil Nadu India
2)Raghul M
3)Aravinth V
4)P.Kathirvel
5)Dr.K.Vijayakumar
6)L.Jayaraman
7)M.Ganeshan
8)Dr.K.Rameshkumar
9)Mr.A.Maideen Abdhulkader Jeylani
(72)**Name of Inventor :**
1)Mr.P.Kathirvel
2)Raghul M
3)Aravinth V
4)P.Kathirvel
5)Dr.K.Vijayakumar
6)L.Jayaraman
7)M.Ganeshan
8)Dr.K.Rameshkumar
9)Mr.A.Maideen Abdhulkader Jeylani

(57) Abstract :
In this work an automated medical tray locator along with a stock detection system which is connected to the database in the webserver is implemented in the pharmacy. When the bill is entered in the billing software accordingly to the prescription, by selecting the search option available in the billing software it will indicate the corresponding medicine trays with an LED indication. This will reduce the effort of searching. Tri-colour LED is used for simultaneous selection of same medicine in different systems. In addition, pharmacist can access the trays from anywhere by the webapp which will also show the stock availability of medicine.

No. of Pages : 5 No. of Claims : 3

(12) PATENT APPLICATION PUBLICATION
(19) INDIA
(22) Date of filing of Application :17/06/2021
(21) Application No.202141027064 A
(43) Publication Date : 02/07/2021

(54) Title of the invention : STUDY OF THE BEHAVIOUR AND PERFORMANCE OF A SOLAR STEAM TURBINE BY CALCULATING THREE VARIANTS BASED ON THE AVAILABLE TECHNOLOGIES

(51) International classification :F01K0023100000, F22B0001000000, F03G0006060000, F03G0006000000, F02C0006180000
(31) Priority Document No :NA
(32) Priority Date :NA
(33) Name of priority country :NA
(86) International Application No :NA
Filing Date :NA
(87) International Publication No : NA
(61) Patent of Addition to Application Number:NA
Filing Date :NA
(62) Divisional to Application Number :NA
Filing Date :NA

(71)**Name of Applicant :**
1)Dr. M.RAMARAO
Address of Applicant :ASSOCIATE PROFESSOR, DEPARTMENT OF MECHANICAL ENGINEERING, BHARATH INSTITUTE OF HIGHER EDUCATION AND RESEARCH, 173, AGHARAM ROAD, SELAIYUR, CHENNAI, TAMIL NADU- 600073 Tamil Nadu India
2)Dr. S. SENTHIL KUMAR
3)Mr. T CH ANIL KUMAR
4)Mr. N. LINGESHWARAN
5)Mr. NAGARAJA T. K
6)Mr. AMOL L. MANGRULKAR
7)Mr. R. SARWESWARAN
8)Mr. KANULLA KARTHIK
9)Dr. MOTI LAL RINAWA
10)Dr. SANJAY KUMAR. S. M
11)Mr. CHANNABASAV
12)Mr. PARTHASARATHY. K
(72)**Name of Inventor :**
1)Dr. M.RAMARAO
2)Dr. S. SENTHIL KUMAR
3)Mr. T CH ANIL KUMAR
4)Mr. N. LINGESHWARAN
5)Mr. NAGARAJA T. K
6)Mr. AMOL L. MANGRULKAR
7)Mr. R. SARWESWARAN
8)Mr. KANULLA KARTHIK
9)Dr. MOTI LAL RINAWA
10)Dr. SANJAY KUMAR. S. M
11)Mr. CHANNABASAV
12)Mr. PARTHASARATHY. K

(57) Abstract :
STUDY OF THE BEHAVIOUR AND PERFORMANCE OF A SOLAR STEAM TURBINE BY CALCULATING THREE VARIANTS BASED ON THE AVAILABLE TECHNOLOGIES This work examines solar thermal turbine cycle and combined cycle devices. It is required to compare the performance of solar steam turbine devices that use different steam generation technologies as well as to study how to control them. It is necessary to investigate the effect of the two different hybridization approaches on the operation of the combined cycle as well as to evaluate their performance. The analysis presented concerns the finding of the most appropriate way of controlling solar steam turbine devices and the comparison of the performance of the devices with thermodynamic and economic terms. In addition, combined cycle hybrid devices are studied and compared where solar heat is delivered to either the gas turbine cycle or the steam turbine cycle.

No. of Pages : 23 No. of Claims : 3

(12) PATENT APPLICATION PUBLICATION
(19) INDIA
(22) Date of filing of Application :17/06/2021
(21) Application No.202141027114 A
(43) Publication Date : 02/07/2021

(54) Title of the invention : AN ARTIFICIAL INTELLIGENCE BASED RESCUE SYSTEM FOR THE SAFETY OF WOMEN

(51) International classification	:A61B0005024000, A61B0005000000, H04W0004900000, G08B0025010000, G08B0021020000
(31) Priority Document No	:NA
(32) Priority Date	:NA
(33) Name of priority country	:NA
(86) International Application No	:NA
Filing Date	:NA
(87) International Publication No	: NA
(61) Patent of Addition to Application Number	:NA
Filing Date	:NA
(62) Divisional to Application Number	:NA
Filing Date	:NA

(71)**Name of Applicant :**
1)Dr. Rajasekar Rangasamy
Address of Applicant :Associate professor, Department of Computer Science and Engineering- AI &ML, School of Engineering, Malla Reddy University, Maisammaguda, Dhullapally Road, Hyderabad. Ph:9443273878 E-Mail:rajasekaratr@gmail.com Telangana India
2)Dr. Thayyaba Khatoon Mohammed
3)Dr. P. Manikandan
4)R. Manivasagan
5)K. Rajeshkumar
6)Dr. T. Prabakaran
(72)**Name of Inventor :**
1)Dr. Rajasekar Rangasamy
2)Dr. Thayyaba Khatoon Mohammed
3)Dr. P. Manikandan
4)R. Manivasagan
5)K. Rajeshkumar
6)Dr. T. Prabakaran

(57) Abstract :
ABSTRACT OF THE INVENTION Today in the current global scenario, women are facing many problems like women harassment. This invention has a device which is the integration of multiple miniature of devices, hardware comprises of a wearable tattoo that endlessly communicates with sensible phone that has access to the internet. This tattoo comprises a GPS Sensor, GSM Module, Raspberry Pi controller, Buzzer, Voice Sensor, Vibration Sensor and PPG sensor. Tattoo can automatically send a women locations and alert message to relatives/Guardian when a Women wearing tattoo senses danger. GPS (Global Positioning System) sensor sends an emergency message to the registered mobile number of women relatives via GSM (Global System for Mobile Communication). The buzzer makes a loud noise in the setting. So that people in the area will hear the alarm and come to their aid. If the Tattoo is destroyed by kidnappers or other unknown people, the vibration sensor will give the last spot. For heart rate control, a PPG sensor is used. Based on their heart rates, an Artificial Intelligence algorithm analyses a PPG data of women every second and sends a warning message to relatives if their condition is irregular or for any security reasons.

No. of Pages : 15 No. of Claims : 8

(12) PATENT APPLICATION PUBLICATION
(21) Application No.202141027119 A
(19) INDIA
(22) Date of filing of Application :17/06/2021
(43) Publication Date : 02/07/2021

(54) Title of the invention : STRUCTURE FOR A TOOTHBRUSH

(51) International classification	:B65D0043020000, F02K0001760000, B29C0065480000, H01R0025140000, A46B0005000000
(31) Priority Document No	:NA
(32) Priority Date	:NA
(33) Name of priority country	:NA
(86) International Application No	:NA
Filing Date	:NA
(87) International Publication No	: NA
(61) Patent of Addition to Application Number	:NA
Filing Date	:NA
(62) Divisional to Application Number	:NA
Filing Date	:NA

(71)**Name of Applicant :**
1)THIRUMURUGAN SUBBAIAH VEERAPPAN MAHADHEVAN
Address of Applicant :13/6, NAGENDRAN STREET, RASIPURAM, NAMAKKAL DISTRICT, TAMIL NADU, INDIA Tamil Nadu India
(72)**Name of Inventor :**
1)THIRUMURUGAN SUBBAIAH VEERAPPAN MAHADHEVAN

(57) Abstract :
A structure for a toothbrush is provided. The structure includes brush head(s) (20). The brush head(s) (20) include a first predefined locking interface (140) positioned on a first surface (250) of the corresponding brush head(s) (20). The first predefined locking interface (140) includes first protrusion(s) (150) arranged at a first predefined spacing (160). The structure also includes a brush body (30). The brush body (30) includes a second predefined locking interface (170) positioned at a first end of the brush body (30). The second predefined locking interface (170) includes second protrusion(s) (180) arranged at a second predefined spacing (190). The second predefined locking interface (170) is adapted to mechanically couple with the first predefined locking interface (140) upon locking the second protrusion(s) (180) with the first protrusion(s) (150) using a locking mechanism. FIG. 1

No. of Pages : 23 No. of Claims : 11

(12) PATENT APPLICATION PUBLICATION
(21) Application No.202141027122 A
(19) INDIA
(22) Date of filing of Application :17/06/2021
(43) Publication Date : 02/07/2021

(54) Title of the invention : STRUCTURE FOR AN UNMANNED AERIAL VEHICLE

(51) International classification	:B64C0029000000, B64C0039020000, B64C0027260000, B64C0039080000, B64C0003100000	(71)**Name of Applicant :** **1)BHEEMANAPALLY AKHILESH** Address of Applicant :C 27, SRIRAMPUR COLONY, MANCHERIAL, 504303, TELANGANA, INDIA Telangana India
(31) Priority Document No	:NA	(72)**Name of Inventor :**
(32) Priority Date	:NA	**1)BHEEMANAPALLY AKHILESH**
(33) Name of priority country	:NA	
(86) International Application No	:NA	
Filing Date	:NA	
(87) International Publication No	: NA	
(61) Patent of Addition to Application Number	:NA	
Filing Date	:NA	
(62) Divisional to Application Number	:NA	
Filing Date	:NA	

(57) Abstract :
A structure for an unmanned aerial vehicle is provided. The structure includes a wing-type fuselage (20). The structure also includes at least two fixed wings (40) which form a fixed-wing platform (70) of a cropped delta wing structure which includes a corresponding fixed-wing root chord (90) which is equivalent to a fuselage root chord (80). The structure also includes a first propeller (110) which provides a forward thrust to the unmanned aerial vehicle in a cruise mode. The structure also includes at least two pairs of second propellers (130) which provide a vertical thrust to the unmanned aerial vehicle in a vertical take-off mode, includes a first pair (131) attached at a first predefined portion of the first fixed-wing (41), and a second pair (132) attached at a second predefined portion of the second fixed-wing (42), thereby achieving a predefined lift and a predefined cruising speed during a flight of the unmanned aerial vehicle. FIG. 1

No. of Pages : 19 No. of Claims : 10

(12) PATENT APPLICATION PUBLICATION
(21) Application No.202141027151 A
(19) INDIA
(22) Date of filing of Application :17/06/2021
(43) Publication Date : 02/07/2021

(54) Title of the invention : AN ARTIFICIAL INTELLIGENCE BASED SYSTEM FOR GENERATING POLYNUCLEOTIDE BAR CODE

(51) International classification	:G06N0020000000, G06K0009620000, G06N0005020000, G06N0005000000, G06N0003020000	(71)**Name of Applicant :** **1)Dr.R.Dhanalakshmi** Address of Applicant :Associate Professor Department of Computer Science and Engineering Indian Institute of Information Technology Tiruchirappalli Tamil Nadu India
(31) Priority Document No	:NA	**2)Dr.P.Parthiban**
(32) Priority Date	:NA	**3)Dr. Monica R Mundada**
(33) Name of priority country	:NA	**4)Smt. Sowmya B J**
(86) International Application No	:NA	**5)Shri. Pradeep Kumar D**
Filing Date	:NA	(72)**Name of Inventor :**
(87) International Publication No	: NA	**1)Dr.R.Dhanalakshmi**
(61) Patent of Addition to Application Number	:NA	**2)Dr.P.Parthiban**
Filing Date	:NA	**3)Dr. Monica R Mundada**
(62) Divisional to Application Number	:NA	**4)Smt. Sowmya B J**
Filing Date	:NA	**5)Shri. Pradeep Kumar D**

(57) Abstract :
ABSTRACT AN ARTIFICIAL INTELLIGENCE BASED SYSTEM FOR GENERATING POLYNUCLEOTIDE BAR CODE [036] The present invention discloses an Artificial Intelligence based system for generating polynucleotide bar code. The system includes, but not limited to, a processing unit provided with an artificial intelligence and machine learning modules, which is programmable to operate with various biosensors to sense a polynucleotide sequence or a probe thereof for generating a polynucleotide bar code. Further, the processing unit is configured to calculate (with the help of an artificial intelligence and machine learning modules), the Hamming distance between the sample label of a polynucleotide sequence and the defined sample label a polynucleotide sequence while using the generated polynucleotide bar code. Moreover, the Hamming distance is calculated by a hamming distance calculation unit, which is one of several polynucleotide sequence string metrics for measuring the edit distance between two or more polynucleotide sequences. Accompanied Drawing [FIG. 1]

No. of Pages : 22 No. of Claims : 8

(12) PATENT APPLICATION PUBLICATION
(21) Application No.202141027159 A
(19) INDIA
(22) Date of filing of Application :17/06/2021
(43) Publication Date : 02/07/2021

(54) Title of the invention : INDUSTRIAL TOOLS STERILIZATION SYSTEM

(51) International classification	:A61L0002100000, G06Q0020020000, A61L0009200000, A23L0003280000, A61K0047690000	(71)**Name of Applicant :** **1)J.INDIRAPRIYADHARSHINI** Address of Applicant :31/25C,HARSH NIVAS, MANIMANDAPAM STREET, OTHAKALMANDAPAM(POST) COIMBATORE Tamil Nadu India
(31) Priority Document No	:NA	**2)T.SIVARANJANI**
(32) Priority Date	:NA	**3)K.ANANTHI**
(33) Name of priority country	:NA	**4)Dr. D. SHAMIA**
(86) International Application No	:NA	**5)M.R.RAVEENDRAN**
Filing Date	:NA	**6)L.SREEVIDYA**
(87) International Publication No	: NA	(72)**Name of Inventor :**
(61) Patent of Addition to Application Number	:NA	**1)J.INDIRAPRIYADHARSHINI**
Filing Date	:NA	**2)T.SIVARANJANI**
(62) Divisional to Application Number	:NA	**3)K.ANANTHI**
Filing Date	:NA	**4)Dr. D. SHAMIA**
		5)M.R.RAVEENDRAN
		6)L.SREEVIDYA

(57) Abstract :
Covid19, which took place in the year 2020, had a profound impact on the entire human race. Because of its rapid and widespread spread, it is necessary to wear face masks and gloves to avoid touching anything. Humans can be shielded by masks, but industrial tools are not so well protected. They have a higher ability to spread disease, such as Covid 19. As a result, hand-held industrial instruments must be sanitized. This complex problem is thus solved by using a smart electronic device controlled by a PIC controller. To solve this problem, a method of sterilization using ultraviolet C lights is proposed and developed. The proposed device employs a pair of UV-C tubes to ensure a successful outcome

No. of Pages : 10 No. of Claims : 7

(12) PATENT APPLICATION PUBLICATION
(19) INDIA
(22) Date of filing of Application :17/06/2021
(21) Application No.202141027167 A
(43) Publication Date : 02/07/2021

(54) Title of the invention : CLIP HELD, SELF STIRRING, HEIGHT ADAPTABLE IMMERSION HEATER

(51) International classification	:H05B0003820000, H05B0003120000, H05B0001020000, F24H0001060000, H05B0003140000
(31) Priority Document No	:NA
(32) Priority Date	:NA
(33) Name of priority country	:NA
(86) International Application No	:NA
Filing Date	:NA
(87) International Publication No	: NA
(61) Patent of Addition to Application Number	:NA
Filing Date	:NA
(62) Divisional to Application Number	:NA
Filing Date	:NA

(71)**Name of Applicant :**
1)ANJELO
Address of Applicant :S/o. LIDETU, LECTURER, DEPARTMENT OF MECHANICAL ENGINEERING, WACHEMO UNIVERSITY, HOSSANA 667, ETHIOPIA, AFRICA. Ethiopia
2)YARED
3)YONAEL
4)PREM CHARLES
5)VENKATESAN
6)MAHESH
(72)**Name of Inventor :**
1)ANJELO
2)YARED
3)YONAEL
4)PREM CHARLES
5)VENKATESAN
6)MAHESH

(57) Abstract :
The present invention is related to water heaters and more specifically to dip-rod type of water heaters for domestic purposes with multiple facilities and advantages to enable the user to operate the heater with different temperatures as it is needed by which electricity consumption can be reduced to far extent provided with an arrangement to position the heater coil to a depth that is required to be dipped in by maintaining a constant mix of water heat all over the vessel. The immersion heater 100 of the invention comprises of expandable sticks (5), a heating element (2); a stirring motor (4); a screw (7) and a screw handle (6) which on rotation can alter the height of the heating element (2). The heating element (2) comprises of two heating coils (3), (3) separated by a fin (1).Refer to Figure 2.

No. of Pages : 19 No. of Claims : 4

(12) PATENT APPLICATION PUBLICATION
(21) Application No.202141027189 A
(19) INDIA
(22) Date of filing of Application :17/06/2021
(43) Publication Date : 02/07/2021

(54) Title of the invention : A VEHICLE SYSTEM WITH HAPTIC OUTPUT FOR IMPAIRED BASED ON MACHINE LEARNING & ARTIFICIAL INTELLIGENCE INTERFACES

(51) International classification	:G06N0020000000, G06F0003010000, G01C0021340000, G06N0003080000, G09G0003200000
(31) Priority Document No	:NA
(32) Priority Date	:NA
(33) Name of priority country	:NA
(86) International Application No	:NA
Filing Date	:NA
(87) International Publication No	: NA
(61) Patent of Addition to Application Number	:NA
Filing Date	:NA
(62) Divisional to Application Number	:NA
Filing Date	:NA

(71)**Name of Applicant :**
1)Dr.Gudikandhula Narasimha Rao
Address of Applicant :Department of Geo-Engineering, College of Engineering (A), Andhra University, Visakhapatnam, Andhra Pradesh, India. Pin Code:530003 Andhra Pradesh India
2)Mr.Sandeep Srivastava
3)Mrs.Geetha Kurikala
4)Dr.P Udayakumar
5)Dr.S.Ravichandran
6)Dr.Prakash Kumar Sarangi
7)Dr.Mohammad Nayeemuddin
8)Mrs.Vijayalakshmi.S
9)Dr.G.G.Raja Sekhar
10)Dr.C.Sumithiradevi
(72)**Name of Inventor :**
1)Dr.Gudikandhula Narasimha Rao
2)Mr.Sandeep Srivastava
3)Mrs.Geetha Kurikala
4)Dr.P Udayakumar
5)Dr.S.Ravichandran
6)Dr.Prakash Kumar Sarangi
7)Dr.Mohammad Nayeemuddin
8)Mrs.Vijayalakshmi.S
9)Dr.G.G.Raja Sekhar
10)Dr.C.Sumithiradevi

(57) Abstract :
ABSTRACT A VEHICLE SYSTEM WITH HAPTIC OUTPUT FOR IMPAIRED BASED ON MACHINE LEARNING & ARTIFICIAL INTELLIGENCE INTERFACES [034] The present invention discloses a vehicle system with haptic output for impaired based on Machine Learning & Artificial Intelligence Interfaces. The method and system includes, but not limited to, a processing unit to activate a haptic device provide inside the vehicle under the reach of an impaired driver on receiving a predefined vicinity data about the driving path of the vehicle by a plurality of sensors. The processing unit is connected with a cloud network for further evaluating the action needs to be taken on having a set of input data. Further, the processing unit is having a deep learning tools and a machine learning and artificial intelligence modules to further analyse the input data in a real-time vehicle system. Accompanied Drawing [FIG. 1]

No. of Pages : 21 No. of Claims : 8

(12) PATENT APPLICATION PUBLICATION
(21) Application No.202141027195 A
(19) INDIA
(22) Date of filing of Application :18/06/2021
(43) Publication Date : 02/07/2021

(54) Title of the invention : SEMI AUTOMATED SILKWORM COCOON CUTTING MACHINE.

(51) International classification	:A01K0067040000, D01B0007020000, D01B0007000000, B26D0003000000, B65B0069000000
(31) Priority Document No	:NA
(32) Priority Date	:NA
(33) Name of priority country	:NA
(86) International Application No	:NA
Filing Date	:NA
(87) International Publication No	: NA
(61) Patent of Addition to Application Number	:NA
Filing Date	:NA
(62) Divisional to Application Number	:NA
Filing Date	:NA

(71)**Name of Applicant :**
1)Dr. Jyothi Thomas ,CHRIST (Deemed to be University), Bengaluru.
Address of Applicant :CHRIST (Deemed to be University), Bengaluru 560029, Karnataka, India. E-mail : j.thomas@christuniversity.in, E-mail: phd.jthomas@gmail.com Karnataka India
2)Vandana Reddy, CHRIST (Deemed to be University), Bengaluru.
3)Dinesh Chandrasekhar , Aadhya Tech Sol, Bengaluru.
4)Bharathi V P, College of Sericulture, Kolar.
5)Kumari K , CHRIST (Deemed to be University), Bengaluru
6)Sania Thomas, CHRIST (Deemed to be University), Bengaluru.
(72)**Name of Inventor :**
1)Dr. Jyothi Thomas ,CHRIST (Deemed to be University), Bengaluru.
2)Vandana Reddy, CHRIST (Deemed to be University), Bengaluru.
3)Dinesh Chandrasekhar , Aadhya Tech Sol, Bengaluru.
4)Bharathi V P, College of Sericulture, Kolar.
5)Kumari K , CHRIST (Deemed to be University), Bengaluru
6)Sania Thomas, CHRIST (Deemed to be University), Bengaluru.

(57) Abstract :
ABSTRACT Our Invention Semi Automated Silkworm Cocoon Cutting Machine is a cocoon cutting machine with 10 cutting blades is used to separate cocoon from the pupa without killing it. The inventive device includes a main frame with vibrating hopper and a vibrating table and in between there are 10 numbers of bobbin to carry the cocoon and 10 nos. of cutting disc blades mounted on a motor at 45° to cut the cocoon. The cocoon is fed to the top hopper and the cocoon gets segregated by the filter to allow ten cocoon at a time slide through and located into the bobbin slot. All the 10 bobbin with single cocoon each rotates clockwise at 90° with a help of a motor and stops for few seconds till the cocoon is cut. Further the Bobbin rotates 90° and allows the cocoon to drop on the vibrating table. The silk worm/pupa falls through the filter on to the tray kept below it. The same process repeats till the cocoon is empty in the hopper. A replaceable cup is used to accommodate different size of cocoon in the bobbin. During pre-processing of the cocoons, a major task in the grain ages or the seed factories is to cut open the cocoon manually and identify the sex of the cocoon. This entire process can be automated with the help of simple engineering solutions. Thereby the field of investigation is one of the cocoon preprocessing that is done at the granges/seed factories.

No. of Pages : 15 No. of Claims : 4

(12) PATENT APPLICATION PUBLICATION
(21) Application No.202141027199 A
(19) INDIA
(22) Date of filing of Application :18/06/2021
(43) Publication Date : 02/07/2021

(54) Title of the invention : DIGITAL IMAGE PROCESSING TECHNIQUES USING MATLAB

(51) International classification	:G06T0005000000, G06K0009400000, G10L0021023200, H04L0027000000, G01N0029460000
(31) Priority Document No	:NA
(32) Priority Date	:NA
(33) Name of priority country	:NA
(86) International Application No	:NA
Filing Date	:NA
(87) International Publication No	: NA
(61) Patent of Addition to Application Number	:NA
Filing Date	:NA
(62) Divisional to Application Number	:NA
Filing Date	:NA

(71)**Name of Applicant :**
1)Lingala Thirupathi, Research Scholor/ Department of CSE, GITAM Institute of Technology, GITAM (Deemed to be University)
Address of Applicant :GITAM Institute of Technology, GITAM (Deemed to be University), Vishakhapatnam, AP-530045 Andhra Pradesh India
2)Er. Sandeep Ravikanti, Assistant Professor / Department of CSE, Methodist College of Engineering & Technology
3)Dheeraj Sundaragiri, Assistant Professor/ Department of CSE, Sreenidhi Institute of Science and Technology
4)Mohd Munawer, Assistant Professor/ Department of CSE, Deccan College of Engineering and Technology.
5)A.Rajesh, Assistant Professor / Department of CSE, Methodist College of Engineering & Technology
6)Sunil Bollam, Assistant Professor/ Department of IT, Malla Reddy Institute of Engineering and Technology
(72)**Name of Inventor :**
1)Lingala Thirupathi, Research Scholor/ Department of CSE, GITAM Institute of Technology, GITAM (Deemed to be University)
2)Er. Sandeep Ravikanti, Assistant Professor / Department of CSE, Methodist College of Engineering & Technology
3)Dheeraj Sundaragiri, Assistant Professor/ Department of CSE, Sreenidhi Institute of Science and Technology
4)Mohd Munawer, Assistant Professor/ Department of CSE, Deccan College of Engineering and Technology.
5)A.Rajesh, Assistant Professor / Department of CSE, Methodist College of Engineering & Technology
6)Sunil Bollam, Assistant Professor/ Department of IT, Malla Reddy Institute of Engineering and Technology

(57) Abstract :
Abstract: High-frequency edges are among the most critical elements of a digital image. Reducing the noise using the conventional filter removes it efficiently. But the picture would be distorted. In other words, to keep the quality of the edge, we should avoid reducing the noise of the image. A wavelet analysis approach, also known as time-frequency analysis, utilizes an adjustable frequency band depending on the properties of the signal. To increase the time-frequency resolution, the frequency band must resemble the spectrum. The signal reduction process is much improved using the wavelet analysis approach. It covers the fundamentals of wavelet analysis. Our findings reveal that the de-noising approach is present in the orthogonal wavelet transform, which utilizes a soft and hard threshold. A de-noising approach has been proposed that utilizes the wavelet transform to resolve picture noise and edge protection based on MATLAB.

No. of Pages : 14 No. of Claims : 5

(12) PATENT APPLICATION PUBLICATION
(21) Application No.202141027206 A
(19) INDIA
(22) Date of filing of Application :18/06/2021
(43) Publication Date : 02/07/2021

(54) Title of the invention : DRIVER STRESS LEVEL PREDICTION USING HEARTBEAT SENSOR AND ARDUINO

(51) International classification	:A61B0005000000, A61B0005024000, A61B0005160000, G06N0003000000, A61B0005047600
(31) Priority Document No	:NA
(32) Priority Date	:NA
(33) Name of priority country	:NA
(86) International Application No	:NA
Filing Date	:NA
(87) International Publication No	: NA
(61) Patent of Addition to Application Number	:NA
Filing Date	:NA
(62) Divisional to Application Number	:NA
Filing Date	:NA

(71)**Name of Applicant :**
1)Dr.A. MURUGAN
Address of Applicant :DEPARTMENT OF COMPUTER SCIENCE AND ENGINEERING, SRM INSTITUTE OF SCIENCE AND TECHNOLOGY, KATTANKULATHUR, CHENGALPATTU DISTRICT, PIN CODE-603203. Tamil Nadu India
2)Mrs.R. SARANYA
(72)**Name of Inventor :**
1)Dr.A. MURUGAN
2)Mrs.R. SARANYA

(57) Abstract :
The levels of stress while driving affect the way we drive and have an impact on the likelihood of having an accident. Different types of sensors, such as heart rate or skin conductivity sensors, have been previously used to measure stress-related features. The proposed invention evaluates how effectively upcoming stress levels can be predicted considering current stress levels, current driving behavior, and the shape of the road. It uses features, such as the positive kinetic energy and severity of curves on the road to estimate how stress levels will evolve in the next minute. Cloud computing with blockchain techniques is evaluated and the results for both intra and inter-city driving and both intra and inter-driver data are presented. Results show that upcoming stress levels can be accurately predicted for a single user (correlation r = 0.99 and classification accuracy 97.5%) but prediction for different users is more limited (correlation r = 0.92 and classification accuracy 46.9%). Final data stored and interpretation factors affecting driver™s health with help of cloud computing and block chain.

No. of Pages : 19 No. of Claims : 6

(12) PATENT APPLICATION PUBLICATION
(21) Application No.202141027208 A
(19) INDIA
(22) Date of filing of Application :18/06/2021
(43) Publication Date : 02/07/2021

(54) Title of the invention : DEVELOPMENT OF SOLAR AND RAIN DROP PRESSURE CELL

(51) International classification	:H02J0007350000, H04R0017000000, H04R0007040000, F03D0009000000, H02S0010120000	(71)**Name of Applicant :** **1)Dr. Manjunatha L H** Address of Applicant :School of Mechanical Engineering, REVA UNIVERSITY, Rukmini Knowledge Park, Kattigenahalli, Yelahanka, Bengaluru Karnataka India
(31) Priority Document No	:NA	(72)**Name of Inventor :**
(32) Priority Date	:NA	**1)Dr.Manjunatha L H**
(33) Name of priority country	:NA	**2)Shaikh Sufiyan Ahmed**
(86) International Application No	:NA	**3)Syed Arbaz Ahmed**
Filing Date	:NA	**4)Syed Nawaz Ahammed**
(87) International Publication No	: NA	**5)Zabiulla K P**
(61) Patent of Addition to Application Number	:NA	**6)Dr Sachin Kumar Patil**
Filing Date	:NA	**7)Dr Siddaraju C**
(62) Divisional to Application Number	:NA	
Filing Date	:NA	

(57) Abstract :
The present investigation relates to Solar and Rain Pressure Cells to increase the efficiency of available solar panels which only works on sunny days. The proposed system consists of Solar panel, Piezoelectric sensors, Acrylic glass, rectifiers, battery system. This research has been improved for the purpose of generating more sustainable energy. The research on the use of piezoelectric transducer to harvest raindrop kinetic energy is gaining attention of researchers frequently. Following invention is described in detail with the help of figure 1 showing the block diagram of the invented system.

No. of Pages : 4 No. of Claims : 5

(12) PATENT APPLICATION PUBLICATION
(21) Application No.202141027240 A
(19) INDIA
(22) Date of filing of Application :18/06/2021
(43) Publication Date : 02/07/2021

(54) Title of the invention : ARTIFICIAL INTELLIGENT BASED DRUG DELIVERY SYSTEM FOR KIDNEY-RELATED AILMENTS

(51) International classification	:G06N0003040000, G06K0009620000, G06N0003080000, G16H0050200000, G16H0010600000
(31) Priority Document No	:NA
(32) Priority Date	:NA
(33) Name of priority country	:NA
(86) International Application No	:NA
Filing Date	:NA
(87) International Publication No	: NA
(61) Patent of Addition to Application Number	:NA
Filing Date	:NA
(62) Divisional to Application Number	:NA
Filing Date	:NA

(71)**Name of Applicant :**
1)Dr. J MUTHU MOHAMED
Address of Applicant :DEPARTMENT OF PHARMACEUTICAL TECHNOLOGY, BIT CAMPUS, ANNA UNIVERSITY, TIRUCHIRAPPALLI 620024, TAMIL NADU, INDIA Tamil Nadu India
2)Dr. KRISHNARAJU VENKATESAN
3)Dr. FAZIL AHMAD
4)Dr. PRANAVE SETHURAJ
5)Dr. NOOHU ABDULLA KHAN
6)Dr. KUMAR VENKATESAN
7)Dr. KUMARAPPAN CHIDAMBARAM
8)Dr. DURGARAMANI SIVADASAN
9)Dr. RASHEED AHEMAD SHAIK
10)Dr. TASNEEM MOHAMMED
11)Dr. AREEJ DAWOUD
12)Mr. AAMER ABBAS
(72)**Name of Inventor :**
1)Dr. J MUTHU MOHAMED
2)Dr. KRISHNARAJU VENKATESAN
3)Dr. FAZIL AHMAD
4)Dr. PRANAVE SETHURAJ
5)Dr. NOOHU ABDULLA KHAN
6)Dr. KUMAR VENKATESAN
7)Dr. KUMARAPPAN CHIDAMBARAM
8)Dr. DURGARAMANI SIVADASAN
9)Dr. RASHEED AHEMAD SHAIK
10)Dr. TASNEEM MOHAMMED
11)Dr. AREEJ DAWOUD
12)Mr. AAMER ABBAS

(57) Abstract :
Artificial intelligent based drug delivery system for kidney-related ailments is the proposed invention that is implemented using deep learning techniques. There is a need for treatment for patients who are suffering from kidney-related elements. Artificial intelligence is heading towards therapeutic and precise treatment by improving the drug delivery system. The proposed invention is implemented by providing a self-phased drug delivery system. A predictive algorithm is developed and run over the trained data set, which is trained using deep learning techniques.

No. of Pages : 16 No. of Claims : 7

(12) PATENT APPLICATION PUBLICATION
(21) Application No.202141027310 A
(19) INDIA
(22) Date of filing of Application :18/06/2021
(43) Publication Date : 02/07/2021

(54) Title of the invention : AN INTELLIGENT WAY TO TRACK VALUABLES USING LOCATION TRACKING BUZZER BOX

(51) International classification	:E05G0001000000, E05G0001140000, A45C0011160000, G08B0021180000, G06Q0010060000
(31) Priority Document No	:NA
(32) Priority Date	:NA
(33) Name of priority country	:NA
(86) International Application No	:NA
Filing Date	:NA
(87) International Publication No	: NA
(61) Patent of Addition to Application Number	:NA
Filing Date	:NA
(62) Divisional to Application Number	:NA
Filing Date	:NA

(71)**Name of Applicant :**
1)Er. Sandeep Ravikanti, Assistant Professor / Department of CSE, Methodist College of Engineering & Technology
Address of Applicant :Methodist College of Engineering & Technology, Abids, Hyderabad, Telangana-500001 Telangana India
2)Mallam Gurudeep, Student/ Department of ECE, Methodist College of Engineering & Technology
3)Pitta Sanju Vardhan, Student / Department of ECE, Methodist College of Engineering & Technology
4)Lingala Thirupathi, Assistant Professor / Department of CSE, Methodist College of Engineering & Technology
5)Unnati Khanapurkar, Assistant Professor / Department of CSE, Methodist College of Engineering & Technology
6)B. Sowjanya, Assistant Professor / Department of CSE, Methodist College of Engineering & Technology
(72)**Name of Inventor :**
1)Er. Sandeep Ravikanti, Assistant Professor / Department of CSE, Methodist College of Engineering & Technology
2)Mallam Gurudeep, Student/ Department of ECE, Methodist College of Engineering & Technology
3)Pitta Sanju Vardhan, Student / Department of ECE, Methodist College of Engineering & Technology
4)Lingala Thirupathi, Assistant Professor / Department of CSE, Methodist College of Engineering & Technology
5)Unnati Khanapurkar, Assistant Professor / Department of CSE, Methodist College of Engineering & Technology
6)B. Sowjanya, Assistant Professor / Department of CSE, Methodist College of Engineering & Technology

(57) Abstract :
Abstract Security is one of the pivotal factors for people in contemporary world. From riches to lower middle class everyone has valuable items which are supposed to be guarded. The new age technology paved a way to create a product which serves a compact security • in terms of size and price. It is named as LTBB (Location tracking buzzer box) At a glance it can be described as moving security box with various user-friendly features available at shoe string budget.

No. of Pages : 15 No. of Claims : 6

(12) PATENT APPLICATION PUBLICATION
(19) INDIA
(22) Date of filing of Application :18/06/2021
(21) Application No.202141027341 A
(43) Publication Date : 02/07/2021

(54) Title of the invention : SYSTEM AND METHOD TO ASSIST ROBOTIC PROCESS AUTOMATION

(51) International classification	:G06F0040300000, G06N0020000000, G06F0008600000, G06F0016951000, G06N0005020000
(31) Priority Document No	:NA
(32) Priority Date	:NA
(33) Name of priority country	:NA
(86) International Application No	:NA
Filing Date	:NA
(87) International Publication No	: NA
(61) Patent of Addition to Application Number	:NA
Filing Date	:NA
(62) Divisional to Application Number	:NA
Filing Date	:NA

(71)**Name of Applicant :**
1)VIGNESH KUMAR
Address of Applicant :TOWER 15, PRESTIGE LAKESIDE HABITAT, DEVASTHANAGULU, BANGALORE, 560087, KARNATAKA, INDIA Karnataka India
(72)**Name of Inventor :**
1)VIGNESH KUMAR

(57) Abstract :
System and method to assist in robotic process automation (RPA) are provided. The system includes an input module configured to receive or retrieve data in a pre-defined form; a data processing module configured to process the input to extract content; a data access module configured to access one or more networks; a model building module configured to build a ML model; the ML model is configured to determine a possibility to generate assistance for the process automation of functioning of the one or more sources, wherein the assistance is generated by a bot model, wherein the BOT model includes a BOT assistance module. The bot assistant module includes an analysis submodule configured to analyse parameters of a user device, networks associated to the user device, or a combination thereof; a server analysis submodule configured to analyse attributes associated to the user device; a process management submodule configured to provide assistance. FIG. 1

No. of Pages : 24 No. of Claims : 10

(12) PATENT APPLICATION PUBLICATION
(21) Application No.202141027417 A
(19) INDIA
(22) Date of filing of Application :18/06/2021
(43) Publication Date : 02/07/2021

(54) Title of the invention : TISSUE SPECIMEN MEASURING GAUGE

(51) International classification	:A61B0005107000, A61B0010020000, A61B0090000000, G01N0001360000, G01B0005020000
(31) Priority Document No	:NA
(32) Priority Date	:NA
(33) Name of priority country	:NA
(86) International Application No	:NA
Filing Date	:NA
(87) International Publication No	: NA
(61) Patent of Addition to Application Number	:NA
Filing Date	:NA
(62) Divisional to Application Number	:NA
Filing Date	:NA

(71)**Name of Applicant :**
1)MEENAKSHI ACADEMY OF HIGHER EDUCATION AND RESEARCH
Address of Applicant :NO.12, VEMBULIAMMAN KOIL STREET WEST K.K. NAGAR CHENNAI TAMIL NADU INDIA 600 078 Tamil Nadu India
(72)**Name of Inventor :**
1)DR. MANOJ PRABHAKAR
2)DR.SIVAPATHASUNDHARAMBALASUNDHARAM

(57) Abstract :
APPLICANT: MEENAKSHI ACADEMY OF HIGHER EDUCATION AND RESEARCH TITLE: TISSUE SPECIMEN MEASURING GAUGE ABSTRACT The present invention discloses a Tissue Specimen Measuring Gaugefor accurate measurement of dimensions of a tissue specimen. The Tissue Specimen Measuring Gauge of the present invention comprises of three measuring arms with markings in centimeters, a length arm[1]calibrated from 0 to 15 centimeters in measurement, a breadth arm[2]calibrated from 0 to 15 centimeters in measurement and a height arm[3]calibrated from 0 to 15 centimeters in measurement, integrated at 900 to each other at a single common point[4]calibrated by 0 cmthereby forming mutually perpendicular X, Y and Z axis. The Tissue Specimen Measuring Gauge of the present invention is characterized in positioning plurality of movable pointers on the arms[1-3]. The length arm[1] is incorporated with two short movable pointers[5a, 5b] adapted to move along the length arm[1] to adjust and mark tissue extremities and configured to measure length of the specimen. The breadth arm[2] is incorporated with two short movable pointers[6a,6b] adapted to move along the breadth arm[2] to adjust and mark tissue extremities and configured to measure breadth of the specimen. The height arm[3] is incorporated with single longer movable pointer[7] adapted to move along the height arm[3] and rest on highest point of tissue specimen and configured to measure height of the specimen.

No. of Pages : 10 No. of Claims : 4

(12) PATENT APPLICATION PUBLICATION
(21) Application No.202141027418 A
(19) INDIA
(22) Date of filing of Application :18/06/2021
(43) Publication Date : 02/07/2021

(54) Title of the invention : NOVEL HYBRID LIGHTWEIGHT FRAMEWORK LOGICAL SECURITY DEVICES FOR INTERNET OF THINGS

(51) International classification	:H04L0029060000, H04L0029080000, G06N0020000000, H04W0012120000, H04W0004700000
(31) Priority Document No	:NA
(32) Priority Date	:NA
(33) Name of priority country	:NA
(86) International Application No	:NA
Filing Date	:NA
(87) International Publication No	: NA
(61) Patent of Addition to Application Number	:NA
Filing Date	:NA
(62) Divisional to Application Number	:NA
Filing Date	:NA

(71)**Name of Applicant :**
1)Mr A. Ranjith, St. Joseph university in Tanzania
Address of Applicant :Assistant Lecturer, Department of Electronics and Communication Engineering, St. Joseph University in Tanzania Tanzania
2)Mr. Gireesh Babu C N, BMS Institute of Technology and Management
3)Mr. Chandrashekhara K T, BMS Institute Of Technology And Management
4)DR Prabhakaran Paulraj, St Joseph University In Tanzania
5)S.Arockia Jayadhas, St.Joseph University In Tanzania
6)Dr.R.Radhika, SRM IST, Chennai.
(72)**Name of Inventor :**
1)Mr A. Ranjith, St. Joseph university in Tanzania
2)Mr. Gireesh Babu C N, BMS Institute of Technology and Management
3)Mr. Chandrashekhara K T, BMS Institute Of Technology And Management
4)DR Prabhakaran Paulraj, St Joseph University In Tanzania
5)S.Arockia Jayadhas, St.Joseph University In Tanzania
6)Dr.R.Radhika, SRM IST, Chennai.

(57) Abstract :
Network tools use it to talk and think with each other in the real world. Kevin Ashton, someone with radio frequency identification (RFID), coined the term Internet of Things (IoT) in Forbes magazine objects mean things in a standard way Objects can be anything we encounter every day and, as noted, are connected to user applications through the internet. The article is not necessarily an electronic device. However, paper, pencils, keys, clothes, etc. equipment can. This may differ in the author's reference to the article. This is aimed at being able to identify and use the methods available for actual use for communications such as web, LAN, VAN or RFID or sensors. The Internet of Items (IoT) facilitates the connecting of diverse things in various contexts. This level of openness and little human interaction can expose the IoT to a variety of threats, including human intermediary assaults. DoS (distributed denial of service) attacks Furthermore, any device can connect to the network, resulting in illegal access. Physical equipment and network connections can potentially be harmed as a result of these assaults. This eventually jeopardises the IoT's security and privacy, given the IoT has restricted resources such as less power, bandwidth, and storage. As a result, efficient security solutions that do not impair IoT resources are required. IoT apps are beginning to gather data safely, explore the data, and assist you in making a final choice. In this study, the LEACH protocol was utilized for data collecting, HLSF was proposed for data protection, and frequency format mining (FP) was used as a data mining approach. Using the same data collecting and data mining methodologies, the overall performance of HLSF and CoAP is evaluated in the context of an inventory management system application scenario in IoT. Accuracy, recall, and correctness are measured and contrasted. When utilized in IoT situations, the findings demonstrate that HLSF delivers comparatively high accuracy, derivation, and decision-making precision when compared to current frameworks.

No. of Pages : 7 No. of Claims : 6

(12) PATENT APPLICATION PUBLICATION
(21) Application No.202141027419 A
(19) INDIA
(22) Date of filing of Application :18/06/2021
(43) Publication Date : 02/07/2021

(54) Title of the invention : INTELLIGENT TEMPORAL EXTRACTION AND ANALYSIS MODEL BASED WEB PERSONALIZED RECOMMENDATION

(51) International classification	:G06Q0030020000, G06Q0030060000, G06F0016953500, G02C0007020000, G06F0016957000
(31) Priority Document No	:NA
(32) Priority Date	:NA
(33) Name of priority country	:NA
(86) International Application No	:NA
Filing Date	:NA
(87) International Publication No	: NA
(61) Patent of Addition to Application Number	:NA
Filing Date	:NA
(62) Divisional to Application Number	:NA
Filing Date	:NA

(71)**Name of Applicant :**
1)Mrs.Chaitra H K
Address of Applicant :Assistant Professor, Department of Computer Science and Engineering, SJB Institute of Technology, BGS health and education city,Dr.Vishnuvardhan road, Kengeri, Bengaluru-560060 Karnataka India
2)Dr. Suneetha K R
(72)**Name of Inventor :**
1)Mrs.Chaitra H K
2)Dr. Suneetha K R

(57) Abstract :
Abstract INTELLIGENT TEMPORAL EXTRACTION AND ANALYSIS MODEL BASED WEB PERSONALIZED RECOMMENDATION The challenge of a typical web-based customized recommendation system from the user's viewpoint: to make the customization or suggestion precise and satisfy the user with the personalization or suggestion. Customization is the process of collecting and evaluating the saved information about website users. This concept helps to provide every visitor with the appropriate information at the appropriate moment. Customization should suggest papers and other websites, advertise goods, provide suitable recommendations, e-mail targets, etc. Personalization is being utilized to speed up the delivery to a visitor of information, making the website appealing and encouraging the user to return.

No. of Pages : 23 No. of Claims : 7

(12) PATENT APPLICATION PUBLICATION
(21) Application No.202141027474 A
(19) INDIA
(22) Date of filing of Application :19/06/2021
(43) Publication Date : 02/07/2021

(54) Title of the invention : A HYBRID METHOD FOR DETECTING UNINTENTIONAL ISLAND FORMATION IN MICRO-GRIDS

(51) International classification	:H02J0003380000, G06F0016310000, B23B0027140000, G01S0007360000, G01V0001520000	(71)**Name of Applicant :** **1)Dr. Suman M** Address of Applicant :4, Kamaraj Nagar, Bikshandar Kovil Post, Trichy 621216, Tamil Nadu Tamil Nadu India **2)Dr. Venkata Kirthiga M**
(31) Priority Document No	:NA	(72)**Name of Inventor :**
(32) Priority Date	:NA	**1)Dr. Suman M**
(33) Name of priority country	:NA	**2)Dr. Venkata Kirthiga M**
(86) International Application No	:PCT//	
Filing Date	:01/01/1900	
(87) International Publication No	: NA	
(61) Patent of Addition to Application Number	:NA	
Filing Date	:NA	
(62) Divisional to Application Number	:NA	
Filing Date	:NA	

(57) Abstract :
The present disclosure relates to a method for detecting unintentional island formation of microgrids. The method facilitates hybrid islanding detection based on mean of rate of change of frequency (AROCOFmean) (Passive Technique), circuit breaker status and disturbance injection (Active Technique). The method continuously monitors the circuit breaker status and as soon as the circuit breaker opens unintentionally, the disturbance is injected through a dedicated disturbance injection module (DDIM). The disturbance helps to vary frequency of the voltage signal significantly even for low power mismatch condition. On analyzing the frequency by AROCOFmean, the unintentional island formation is detected.

No. of Pages : 29 No. of Claims : 10

(12) PATENT APPLICATION PUBLICATION
(19) INDIA
(22) Date of filing of Application :19/06/2021
(21) Application No.202141027484 A
(43) Publication Date : 02/07/2021

(54) Title of the invention : WIRELESS STETHOSCOPE USING WIFI TECHNOLOGY FOR REMOTE ACCESS OF PATIENTS

(51) International classification	:A61B0007040000, A61B0007020000, A61B0005000000, A61B0007000000, A61B0005025000
(31) Priority Document No	:NA
(32) Priority Date	:NA
(33) Name of priority country	:NA
(86) International Application No	:PCT//
Filing Date	:01/01/1900
(87) International Publication No	: NA
(61) Patent of Addition to Application Number	:NA
Filing Date	:NA
(62) Divisional to Application Number	:NA
Filing Date	:NA

(71)**Name of Applicant :**
1)Rahul P
Address of Applicant :Assistant Professor, Department of Computer Science and Engineering, MET'S School of Engineering, APJ Abdul Kalam Technological University . Thrissur, kerala Kerala India
2)Dr.M.Ramkumar Raja
3)Dr. R.Kannan
4)Dr. M.Mano Raja Paul
5)Dr.A.Gokula chandar
6)Mr.Rajkumar.K.K
(72)**Name of Inventor :**
1)Rahul P
2)Dr.M.Ramkumar Raja
3)Dr. R.Kannan
4)Dr. M.Mano Raja Paul
5)Dr.A.Gokula chandar
6)Mr.Rajkumar.K.K

(57) Abstract :
Abstract: Stethoscopes are used regularly by medical personnel to listen to acoustic signals picked from the internal parts of the human body during diagnosis and treatment of patients. Although stethoscopes play a very important role in the diagnosis process, the chest piece and the connecting cable are known to facilitate transmission of pathogens from patient to patient and from patient to the user. Replacing the connecting cable with a wireless system may help reduce the potential risk and further allow broadcasting of the signals to multi-users for examination. The digital stethoscope was designed by modifying an analog stethoscope and adding an analog front end and miniaturized microcontroller with built-in Wi-Fi for digitization and transmission. A real-time heart sound signal acquisition, amplification, filtering, digitization, and wireless transmission are accomplished by the sensor sub-system. A multi-threaded python script was written to acquire, buffer, real-time pre-process and classify the heart sound data in the host computer. The optimized Ensemble algorithm which provides Feature reduction, hyper parameter optimization, along with asymmetrical cost assignment can be used to segregate the normal and abnormal Heart beat signal. The receiver unit comprises a headphone jack which can be inbuilt with a Wi-Fi modem in order to clearly hear the pulmonary, cardiac or digestive noises being monitored.

No. of Pages : 20 No. of Claims : 9

(12) PATENT APPLICATION PUBLICATION
(19) INDIA
(22) Date of filing of Application :19/06/2021

(21) Application No.202141027491 A
(43) Publication Date : 02/07/2021

(54) Title of the invention : A SOLAR-POWERED SMART MAILBOX SYSTEM USING IOT

(51) International classification	:A47G0029120000, H04W0004800000, H04L0029080000, H04L0029060000, G08B0021040000
(31) Priority Document No	:NA
(32) Priority Date	:NA
(33) Name of priority country	:NA
(86) International Application No	:NA
Filing Date	:NA
(87) International Publication No	: NA
(61) Patent of Addition to Application Number	:NA
Filing Date	:NA
(62) Divisional to Application Number	:NA
Filing Date	:NA

(71)**Name of Applicant :**
1)Dr Balakrishna Maddodi
Address of Applicant :Assistant Professor Selection Scale (Geology), Dept. of Civil Engineering, MIT Manipal, Karnataka. Karnataka India
2)Dr P Ramya
3)Mr S Dhayanandh
4)Mrs V Indumathi
5)Dr M Ravi
6)Dr T Tamilarasi
7)Mr Gowri Shankar Mahalingam
8)Dr P Ponmurugan
(72)**Name of Inventor :**
1)Dr Balakrishna Maddodi
2)Dr P Ramya
3)Mr S Dhayanandh
4)Mrs V Indumathi
5)Dr M Ravi
6)Dr T Tamilarasi
7)Mr Gowri Shankar Mahalingam
8)Dr P Ponmurugan

(57) Abstract :
In this age of electronic communication, checking the physical mailbox is still part of our daily life. Mailboxes are placed several meters away from the house, and sometimes across the opposite side of a street. It is annoying to walk to the mailbox each day and realize that the mailbox is empty. The proposed innovation is an Internet of Things (IoT)-connected smart mailbox that automatically sends a notification to the smartphone whenever new mail arrives. This notification removes the frustration of an unnecessary trip to the mailbox. The proposed mailbox contains a low power device comprising of sensors, a system-on-chip microcontroller with Bluetooth Low Energy (BLE), and a rechargeable battery that charges with a solar panel. Whenever the mailbox door is closed, it checks the presence of mail and then sends the data to a hub using BLE. The hub is placed inside the house and sends a push notification to the smartphone using the home Wi-Fi. A smart speaker, Google Home, is also interfaced with the system, which can verbally say the status of the mailbox when asked a customized question.

No. of Pages : 9 No. of Claims : 7

(12) PATENT APPLICATION PUBLICATION
(19) INDIA
(22) Date of filing of Application :19/06/2021

(21) Application No.202141027496 A
(43) Publication Date : 02/07/2021

(54) Title of the invention : PORTABLE SITTING DEVICE

(51) International classification	:G08B0021040000, A61B0017320000, A61B0005110000, H04N0005330000, G01F0023000000
(31) Priority Document No	:NA
(32) Priority Date	:NA
(33) Name of priority country	:NA
(86) International Application No	:NA
Filing Date	:NA
(87) International Publication No	: NA
(61) Patent of Addition to Application Number	:NA
Filing Date	:NA
(62) Divisional to Application Number	:NA
Filing Date	:NA

(71)**Name of Applicant :**
1)JAIN (Deemed-to-be University)
Address of Applicant :Jain Global Campus, Jakkasandra Post, Kanakapura Road, Kanakapura Taluk, Ramnagar District, Karnataka Bangalore 562112, India. Karnataka India
(72)**Name of Inventor :**
1)Vinuth Raj T N
2)S Naveen

(57) Abstract :
The present invention relates to a portable device comprises of circular plate 1 associated with multiple straps 2 to wear device over back region, A.I. based image capturing unit 3 attached at plate 1 to determine height of user, threshold distance between plate 1 and floor and type of floor, sensor module to determine if distance between plate 1 and floor is below threshold distance, multiple primary telescopic rods 4 attached beneath circular plate 1 which actuates upto particular distance, grapple 5 and suction cup 6 present on one end of primary rod actuates according to wet or dry surface detection via image capturing unit 3, secondary telescopic rod 7 present on periphery of plate 1 actuates when user is about to fall, two metal strips connected with battery at periphery of plate 1 associated with thermal imaging sensor to determine presence of insect and prevent it from climbing up.

No. of Pages : 14 No. of Claims : 7

(12) PATENT APPLICATION PUBLICATION
(21) Application No.202141027497 A
(19) INDIA
(22) Date of filing of Application :19/06/2021
(43) Publication Date : 02/07/2021

(54) Title of the invention : POTATO CHIPS SLICING DEVICE

(51) International classification	:A23L0019180000, B26D0007060000, A23N0007020000, B26D0003180000, B26D0007010000	(71)**Name of Applicant :** **1)Jain (Deemed-to-be University)** Address of Applicant :Jain Global Campus, Jakkasandra Post, Kanakapura Road, Kanakapura Taluk, Ramnagar District, Karnataka Bangalore 562112, India. Karnataka India
(31) Priority Document No	:NA	(72)**Name of Inventor :**
(32) Priority Date	:NA	**1)Venkadeshwaran K**
(33) Name of priority country	:NA	**2)Subhashini S**
(86) International Application No	:NA	
Filing Date	:NA	
(87) International Publication No	: NA	
(61) Patent of Addition to Application Number	:NA	
Filing Date	:NA	
(62) Divisional to Application Number	:NA	
Filing Date	:NA	

(57) Abstract :
A potato chips slicing device comprising a base 1 configured with a container 2, that stores plurality of potatoes, a Liquid crystal display (LCD) panel 3 for providing an access to a user to input commands regarding shape of the potato to be sliced, a freshness detection sensor for detecting freshness of the potatoes, a microcontroller for comparing freshness level with pre-fed value and generates a command to actuate motorized telescopic gripper 4 to grip the potato, a support 5 hinged with plurality of spikes 6 for grabbing and pushing the potato, an electric potato peeler 8 for peeling the potato, plurality of telescopic sticks 9 for accommodating the peeled potato, a cutter assembly 10 comprising plurality of blades for slicing the potato according to the shape input by the user, a sliding basket 11 for receiving the sliced potato and rinsing with solution present within the tank 12.

No. of Pages : 14 No. of Claims : 8

(12) PATENT APPLICATION PUBLICATION
(21) Application No.202141027498 A
(19) INDIA
(22) Date of filing of Application :19/06/2021
(43) Publication Date : 02/07/2021

(54) Title of the invention : AUTOMATED BRUSH MANUFACTURING DEVICE

(51) International classification	:H04N0005225000, B07B0013000000, B41J0002010000, G08B0013240000, B08B0001020000
(31) Priority Document No	:NA
(32) Priority Date	:NA
(33) Name of priority country	:NA
(86) International Application No	:NA
Filing Date	:NA
(87) International Publication No	: NA
(61) Patent of Addition to Application Number	:NA
Filing Date	:NA
(62) Divisional to Application Number	:NA
Filing Date	:NA

(71)**Name of Applicant :**
1)JAIN (Deemed-to-be University)
Address of Applicant :Jain Global Campus, Jakkasandra Post, Kanakapura Road, Kanakapura Taluk, Ramnagar District, Karnataka Bangalore 562112, India. Karnataka India
(72)**Name of Inventor :**
1)Asha K S
2)Vinod Moger

(57) Abstract :
The present invention relates to an automated brush manufacturing device includes a barrel unit 1 structured symmetrically to store multiple movable motorized reels2 wrapped with bristles 3 of different materials, wherein the reels 2 are employed with wheels that aid in movement of a selected reel 2 towards opening of the unit 1, a blade 4 associated in proximity to the opening via a motorized hinge, a conveyor belt 5 fixed in communication with opening of the barrel unit 1, an Artificial Intelligence (AI) camera module 6 installed in proximity to the belt 5, a roller 7 connected positioned at one end of the belt 5, a sliding track 8 fitted over a frame, wherein multiple V • shaped wires 9 are fitted over the track 8 and a railing 10 fitted over the frame, wherein a primary clamper unit 11 is mounted over the railing 10.

No. of Pages : 13 No. of Claims : 6

(12) PATENT APPLICATION PUBLICATION
(21) Application No.202141027499 A
(19) INDIA
(22) Date of filing of Application :19/06/2021
(43) Publication Date : 02/07/2021

(54) Title of the invention : PARCEL DELIVERY SYSTEM

(51) International classification	:G06Q0010080000, G06K0007100000, G07F0017120000, G06Q0050280000, E05G0007000000
(31) Priority Document No	:NA
(32) Priority Date	:NA
(33) Name of priority country	:NA
(86) International Application No	:NA
Filing Date	:NA
(87) International Publication No	: NA
(61) Patent of Addition to Application Number	:NA
Filing Date	:NA
(62) Divisional to Application Number	:NA
Filing Date	:NA

(71)**Name of Applicant :**
1)JAIN (Deemed-to-be University)
Address of Applicant :Jain Global Campus, Jakkasandra Post, Kanakapura Road, Kanakapura Taluk, Ramnagar District, Karnataka Bangalore 562112, India. Karnataka India
(72)**Name of Inventor :**
1)Dr. Dinesh Nilkant
2)Dr. Varsha Agarwal
3)Dr. Saravanan C

(57) Abstract :
The present invention relates to a delivery system comprises of a compartment 1 positioned at entrance of building 2, a primary image capturing module attached over compartment 1 to capture image of person delivering parcel, a secondary image capturing module 7 attached within compartment 1 to analyse data over parcel, a computing unit connected with microcontroller operated by user to authenticate person delivering parcel, multiple scanners attached within compartment 1 to scan parcel upon authentication of person and to generate an alarm in case of suspicious parcel, multiple containers 3 associated in proximity to compartment 1 which bifurcate into multiple chambers 8 with different temperatures to store parcel while delivering on basis of type of parcel, a sorter 9 attached within compartment 1 actuated by microcontroller to distribute parcel within chamber 8, multiple tracks 5 attached in grid shape within building 2 to deliver parcel to respective user™s window 4.

No. of Pages : 17 No. of Claims : 9

(12) PATENT APPLICATION PUBLICATION
(21) Application No.202141027500 A
(19) INDIA
(22) Date of filing of Application :19/06/2021
(43) Publication Date : 02/07/2021

(54) Title of the invention : INSECT CATCHING AND RELEASING DEVICE

(51) International classification	:G01N0021010000, A01M0001200000, F03D0013200000, A01M0001020000, A01M0001100000	(71)**Name of Applicant :** **1)JAIN (Deemed-to-be University)** Address of Applicant :Jain Global Campus, Jakkasandra Post, Kanakapura Road, Kanakapura Taluk, Ramnagar District, Karnataka Bangalore 562112, India. Karnataka India
(31) Priority Document No	:NA	(72)**Name of Inventor :**
(32) Priority Date	:NA	**1)Dr. Varsha Agarwal**
(33) Name of priority country	:NA	
(86) International Application No	:NA	
Filing Date	:NA	
(87) International Publication No	: NA	
(61) Patent of Addition to Application Number	:NA	
Filing Date	:NA	
(62) Divisional to Application Number	:NA	
Filing Date	:NA	

(57) Abstract :
An insect catching and releasing device comprising, a telescopic installed with an optical sensor 4 to detect presence of a user™s hand, an image capturing module 5 mounted over rod 1 to detect presence as well as size of an insect over a surface, a shape shifting fabric 6 paired with a circular plate 7 attached at distal end 3 of rod 1 and actuated by microcontroller to provide movement to circular plate 7, a first and second set of bristles 8, 9 perforated within circular plate 7 and one of bristles 8, 9 set gets actuated by microcontroller in accordance with respective size of insect for clasping insect in a secured manner, a storage container 10 attached along with rod 1, microcontroller actuates fabric 6 along with motorized bristles 8, 9 to bend plate 7 towards container 10 respectively and release clasped insect within container 10.

No. of Pages : 13 No. of Claims : 10

(12) PATENT APPLICATION PUBLICATION
(19) INDIA
(22) Date of filing of Application :19/06/2021

(21) Application No.202141027501 A
(43) Publication Date : 02/07/2021

(54) Title of the invention : SMART ANIMAL MUZZLE

(51) International classification	:A61B0005000000, G01N0033020000, A01K0005010000, A61B0005010000, A61B0005048800
(31) Priority Document No	:NA
(32) Priority Date	:NA
(33) Name of priority country	:NA
(86) International Application No	:PCT//
Filing Date	:01/01/1900
(87) International Publication No	: NA
(61) Patent of Addition to Application Number	:NA
Filing Date	:NA
(62) Divisional to Application Number	:NA
Filing Date	:NA

(71)**Name of Applicant :**
1)JAIN (Deemed-to-be University)
Address of Applicant :Jain Global Campus, Jakkasandra Post, Kanakapura Road, Kanakapura Taluk, Ramnagar District, Karnataka Bangalore 562112, India. Karnataka India
(72)**Name of Inventor :**
1)Dr Yogesh Kumar K
2)Dr. Manjunath H R

(57) Abstract :
A smart animal muzzle, comprising a wearable body 1 installed with multiple biological sensors 2 for determining physiological parameters of an animal, an (AI) artificial intelligence enabled image capturing module 3 for detecting edible portions of consumable food that are supposed to be consumed by animal, wherein the module 3 also determines presence of dirt/dust, insects and pests accumulation over food, a hyper spectral image processing unit for analysing the nutrients of food before consumption by animal, a microcontroller interconnected in between the sensors 2, module 3 and unit for generating a command in case harmful nutrients/ingredients are detected within food, having a probability of altering parameters of animal, a pair of telescopic rods 5 attached to a plate 6, wherein the rods 5 extend to place the plate 6 over mouth portion of animal to restrict consumption of the dirt/dust, insects and pests accumulated food.

No. of Pages : 15 No. of Claims : 9

(12) PATENT APPLICATION PUBLICATION
(19) INDIA
(22) Date of filing of Application :19/06/2021
(21) Application No.202141027502 A
(43) Publication Date : 02/07/2021

(54) Title of the invention : EVIDENCE IDENTIFICATION AND MARKING DEVICE

(51) International classification	:G07D0007120000, G06K0019140000, A63F0001180000, H03K0017940000, G09F0003000000	(71)**Name of Applicant :** **1)JAIN (Deemed-to-be University)** Address of Applicant :Jain Global Campus, Jakkasandra Post, Kanakapura Road, Kanakapura Taluk, Ramnagar District, Karnataka Bangalore 562112, India. Karnataka India
(31) Priority Document No	:NA	(72)**Name of Inventor :**
(32) Priority Date	:NA	**1)Madhumala K N**
(33) Name of priority country	:NA	**2)Anusha S**
(86) International Application No	:NA	
Filing Date	:NA	
(87) International Publication No	: NA	
(61) Patent of Addition to Application Number	:NA	
Filing Date	:NA	
(62) Divisional to Application Number	:NA	
Filing Date	:NA	

(57) Abstract :
The present invention relates to an evidence identification and marking device comprises, a body 3 kept in the proximity to an investigation area, mounted with an image capturing unit 2 that takes multiple images and records video of the area, a microcontroller embedded within the body 3 and paired with the image capturing unit 2, where the microcontroller based upon the footages, creates a blue print of the area once it is cleaned up by identifying each and every object present in the area and saves into a data base, plurality Omni directional wheels 5 controller by said microcontroller that positions the body 3 in the area and actuates a projection unit 1 that projects saved blue print too recreate the area for investigation, and an ultraviolet light that emits lights over the area in order to identify hidden texts to aid in investigation and find clue for an event.

No. of Pages : 13 No. of Claims : 9

(12) PATENT APPLICATION PUBLICATION
(21) Application No.202141027503 A
(19) INDIA
(22) Date of filing of Application :19/06/2021
(43) Publication Date : 02/07/2021

(54) Title of the invention : ELECTRICAL SAFETY DEVICE

(51) International classification	:A41D0019000000, H02H0005040000, G08C0019000000, H05B0003360000, E06B0009680000
(31) Priority Document No	:NA
(32) Priority Date	:NA
(33) Name of priority country	:NA
(86) International Application No	:NA
Filing Date	:NA
(87) International Publication No	: NA
(61) Patent of Addition to Application Number	:NA
Filing Date	:NA
(62) Divisional to Application Number	:NA
Filing Date	:NA

(71)**Name of Applicant :**
1)JAIN (Deemed-to-be University)
Address of Applicant :Jain Global Campus, Jakkasandra Post, Kanakapura Road, Kanakapura Taluk, Ramnagar District, Karnataka Bangalore 562112, India. Karnataka India
(72)**Name of Inventor :**
1)Dr. Raghu N
2)Dr. Balamurugan
3)Dr.Kola Sambangi Sambaiah

(57) Abstract :
An electrical safety device, comprising two gloves 1, 12 having multiple layers for protecting a user while operating transmission lines, wherein the gloves 1 is installed with an inflating unit for ensuring proper fitting and flexibility in wearing the gloves 1, a sensing unit 2, 3 for detecting presence of current and/or temperature of the lines, wherein a microcontroller generates a command to actuate an primary insulation layer 4 arranged on a telescopic rod 5 to cover fingers, wherein the secondary insulation layer 6 is wrapped on a motorized roller 7 arranged on a rack 8 that unwraps to cover palm of the user for protection, multiple telescopic pins 10 for holding electrical wires while working on the lines wherein a pusher 11 and cutter 9 actuates to crimp the wire, a motorized roller 13 wrapped with an insulating material that rolls out for encasing the wires.

No. of Pages : 14 No. of Claims : 8

(12) PATENT APPLICATION PUBLICATION
(19) INDIA
(22) Date of filing of Application :19/06/2021

(21) Application No.202141027504 A
(43) Publication Date : 02/07/2021

(54) Title of the invention : WIRE STAPLING DEVICE

(51) International classification	:B41J0002165000, B64C0039020000, G01N0029220000, G01R0029080000, B25C0005160000
(31) Priority Document No	:NA
(32) Priority Date	:NA
(33) Name of priority country	:NA
(86) International Application No	:NA
Filing Date	:NA
(87) International Publication No	: NA
(61) Patent of Addition to Application Number	:NA
Filing Date	:NA
(62) Divisional to Application Number	:NA
Filing Date	:NA

(71)**Name of Applicant :**
1)Jain (Deemed-to-be University)
Address of Applicant :Jain Global Campus, Jakkasandra Post, Kanakapura Road, Kanakapura Taluk, Ramnagar District, Karnataka Bangalore 562112, India. Karnataka India
(72)**Name of Inventor :**
1)Dr. P.Pradeepa
2)Trupti VN
3)Yashaswini H K
4)Spandana Gowda H K

(57) Abstract :
The present invention relates a wire stapling device comprising, a housing 1 embedded with plurality of nailing unit (s) 2 that comprises of a rectangular base 3 having a pair of pins 4 to fasten different types of objects, an AI camera 5 integrated with a microcontroller for real time monitoring of thickness of the objects, wherein the controller on processing the images generates a command to actuate a pair of clamps 6 in order to adjust positioning of the pins 4, a motorized piston 7 mounted on the housing 1 for driving the pins 4 within a wall, an ultrasonic sensor interfaced with the microcontroller for detecting depth of pipe/metal present within the wall, wherein the microcontroller on processing the detected signals generates a command to actuate an alarming unit.

No. of Pages : 14 No. of Claims : 6

(12) PATENT APPLICATION PUBLICATION
(19) INDIA
(22) Date of filing of Application :19/06/2021
(21) Application No.202141027505 A
(43) Publication Date : 02/07/2021

(54) Title of the invention : REGENERATIVE SURFACE MEASUREMENT DEVICE

(51) International classification	:H02N0002180000, G01B0003120000, A61B0017290000, H01L0041113000, E01C0023090000
(31) Priority Document No	:NA
(32) Priority Date	:NA
(33) Name of priority country	:NA
(86) International Application No	:NA
Filing Date	:NA
(87) International Publication No	: NA
(61) Patent of Addition to Application Number	:NA
Filing Date	:NA
(62) Divisional to Application Number	:NA
Filing Date	:NA

(71)**Name of Applicant :**
1)JAIN (Deemed-to-be University)
Address of Applicant :Jain Global Campus, Jakkasandra Post, Kanakapura Road, Kanakapura Taluk, Ramnagar District, Karnataka Bangalore 562112, India. Karnataka India
(72)**Name of Inventor :**
1)Chethan G S
2)Ashutosh Pattanaik

(57) Abstract :
The present invention relates to a regenerative surface measurement device comprises, a telescopic rod 1 having a proximal and distal end, proximal end is attached with a handle 2, a wheel 9 is installed at distal end of rod via a motorized ball joint, wheel 9 allows a user to glide rod over road surface to be measured, a hydraulic module 4 placed between handle 2 and wheel 9 facilitates in rotation of wheel 9 in predefined direction and converting applied force into electrical energy, a display screen 5 fitted adjacent to handle 2 allows the user to insert the desired angle of rotation, an image capturing unit 6 and paired with a microcontroller to capture multiple images of the surrounding to make a 3-dimensional map so as to measure distance covered by wheel 9 in real time, a piezoelectric module 7 to generate electricity from applied force.

No. of Pages : 14 No. of Claims : 5

(12) PATENT APPLICATION PUBLICATION
(19) INDIA
(22) Date of filing of Application :19/06/2021
(21) Application No.202141027526 A
(43) Publication Date : 02/07/2021

(54) Title of the invention : DESIGNING AN ELECTRIC CIRCUIT BY USING A NEURAL NETWORK WITH BAYESIAN INFERENCE TO SELECT SUB-ROUTES FOR CONNECTING ELEMENTS

(51) International classification	:G06N0003040000, G06K0009620000, G06K0009000000, G06N0003080000, G06K0009460000
(31) Priority Document No	:NA
(32) Priority Date	:NA
(33) Name of priority country	:NA
(86) International Application No	:NA
Filing Date	:NA
(87) International Publication No	: NA
(61) Patent of Addition to Application Number	:NA
Filing Date	:NA
(62) Divisional to Application Number	:NA
Filing Date	:NA

(71)**Name of Applicant :**
1)Dr.Jarabala Ranga
Address of Applicant :Professor, Department of EEE, Ramachandra College of Engineering, Eluru, Andhra Pradesh, India. Pin Code:534007 Andhra Pradesh India
2)Mr.T CH Anil Kumar
3)Mr.P.Tamilarasu
4)Dr.K.Jamberi
5)Dr.M.Murali
6)Dr.Rabinarayan Satpathy
7)Dr.Sushma Jaiswal
8)Mr.Tarun Jaiswal
9)Dr.Mundluru Dharani
10)Dr.Sakuntala Mahapatra
(72)**Name of Inventor :**
1)Dr.Jarabala Ranga
2)Mr.T CH Anil Kumar
3)Mr.P.Tamilarasu
4)Dr.K.Jamberi
5)Dr.M.Murali
6)Dr.Rabinarayan Satpathy
7)Dr.Sushma Jaiswal
8)Mr.Tarun Jaiswal
9)Dr.Mundluru Dharani
10)Dr.Sakuntala Mahapatra

(57) Abstract :
ABSTRACT DESIGNING AN ELECTRIC CIRCUIT BY USING A NEURAL NETWORK WITH BAYESIAN INFERENCE TO SELECT SUB-ROUTES FOR CONNECTING ELEMENTS [034] The present invention discloses a virtual jewellery shopping and related user interfaces. The method and system includes, but not limited to, a plurality of I/O devices for receiving data representing from a plurality of circuit elements; a means implemented with a Convolutional Neural Network (CNN) module is configured to use a Bayesian inference for object detection and recognition of placement of circuit connecting elements through image analysis, and processing models for extracting image features should tolerate pattern deformations and pattern position shifts generate a state signal, which further represents configuration of the electrical circuit. Further, the Bayesian inference and CNN module is used to further identify a plurality of candidate routes for connecting each elements present in the circuit. Accompanied Drawing [FIG. 1]

No. of Pages : 21 No. of Claims : 8

(12) PATENT APPLICATION PUBLICATION
(21) Application No.202141027540 A
(19) INDIA
(22) Date of filing of Application :19/06/2021
(43) Publication Date : 02/07/2021

(54) Title of the invention : DEEP LEARNING METHOD BASED NATURAL DISASTER PREDICTION SYSTEM

(51) International classification	:G06K0009620000, G06N0003080000, G06N0003040000, G06N0020000000, G06N0007000000
(31) Priority Document No	:NA
(32) Priority Date	:NA
(33) Name of priority country	:NA
(86) International Application No	:NA
Filing Date	:NA
(87) International Publication No	: NA
(61) Patent of Addition to Application Number	:NA
Filing Date	:NA
(62) Divisional to Application Number	:NA
Filing Date	:NA

(71)**Name of Applicant :**
1)Dr.M. Thangamani, Kongu Engineering College
Address of Applicant :Associate Professor, Department of IT, Kongu Engineering College, Perundurai - 638 052, Tamilnadu, India. Email id : manithangamani2@gmail.com Mobile No : 9488152464 Tamil Nadu India
2)Dr.R. Rameshkumar, Sphoorthy Engineering College
3)Mrs.M. Ganthimathi, Muthayammal Engineering College
4)Dr. Nalini Chinnusamy, Kongu Engineering College
5)Dr.K. Radha, Mahendra Engineering College
6)Dr.S. Lavanya, Muthayammal Engineering College
7)Dr.S. Prema, Mahendra Engineering College
8)Dr.P. Malarkodi, Kongu Engineering College
9)Mrs.P. Renukadevi, Paavai Engineering College
10)Mrs.R. Dhivya, Paavai Engineering College
(72)**Name of Inventor :**
1)Dr.M. Thangamani, Kongu Engineering College
2)Dr.R. Rameshkumar, Sphoorthy Engineering College
3)Mrs.M. Ganthimathi, Muthayammal Engineering College
4)Dr. Nalini Chinnusamy, Kongu Engineering College
5)Dr.K. Radha, Mahendra Engineering College
6)Dr.S. Lavanya, Muthayammal Engineering College
7)Dr.S. Prema, Mahendra Engineering College
8)Dr.P. Malarkodi, Kongu Engineering College
9)Mrs.P. Renukadevi, Paavai Engineering College
10)Mrs.R. Dhivya, Paavai Engineering College

(57) Abstract :
Deep learning is a branch of machine learning founded on a set of algorithms that model high-level abstractions in data by using model architectures, with complex structures and regularly collected of multiple non-linear transformations. Deep learning is part of a wider family of machine learning methods based on learning representations of data. An observation (e.g., an image) can be denoted in many ways such as a vector of intensity values per pixel, or in a more abstract way as a set of edges, regions of particular shape, etc. Deep learning algorithms often use a cascade of many layers of nonlinear processing units for feature extraction and transformation. Each consecutive layer uses the output from the previous layer as input. The algorithms may be supervised or unsupervised, and applications include pattern analysis (unsupervised) and classification (supervised). This invention being initiated to predict natural incidence and responses. Initially, one or more personal data gathering device (computer) receives one or more data in the form of alerts with respect to incidence. The computer in this system converts aggregated data into prediction model. A Restricted Boltzmann Machine (RBM) is a generative stochastic ANN that can learn a probability distribution over its set of inputs. In this invention, RBM is utilized to train the predicted model based on the supervised learning method.

No. of Pages : 13 No. of Claims : 3

(12) PATENT APPLICATION PUBLICATION
(19) INDIA
(22) Date of filing of Application :19/06/2021

(21) Application No.202141027546 A
(43) Publication Date : 02/07/2021

(54) Title of the invention : SALES DECISION MANAGEMENT SYSTEM USING POSSIBILITY THEORY

(51) International classification	:G06Q0010060000, G06Q0010100000, G06Q0099000000, G06N0005000000, G06Q0090000000
(31) Priority Document No	:NA
(32) Priority Date	:NA
(33) Name of priority country	:NA
(86) International Application No	:NA
Filing Date	:NA
(87) International Publication No	: NA
(61) Patent of Addition to Application Number	:NA
Filing Date	:NA
(62) Divisional to Application Number	:NA
Filing Date	:NA

(71)**Name of Applicant :**
1)Mr. T CH Anil Kumar
Address of Applicant :Assistant Professor, Department of Mechanical Engineering, VFSTR (Deemed to be University) Vadlamudi, Pincode : 522213 Andhra Pradesh India
2)Mr. Ajay Kumar Garg
3)Mr.Basavaraj S Mammani
4)Mr. V. Selvakumar
5)Dr Poonam Kakkad
6)Mr. S.Jayadatta
7)Dr.Ashutosh Gaur
8)Mr. D M Arvind Mallik
9)Mr. Paluru Munesh
10)Ms. Kamakshi
11)Mr. D. Saravanan
12)Dr. D. Stalin David
13)Mr. R. Parthiban
14)Dr.U.Palani
(72)**Name of Inventor :**
1)Mr. T CH Anil Kumar
2)Mr. Ajay Kumar Garg
3)Mr.Basavaraj S Mammani
4)Mr. V. Selvakumar
5)Dr Poonam Kakkad
6)Mr. S.Jayadatta
7)Dr.Ashutosh Gaur
8)Mr. D M Arvind Mallik
9)Mr. Paluru Munesh
10)Ms. Kamakshi
11)Mr. D. Saravanan
12)Dr. D. Stalin David
13)Mr. R. Parthiban
14)Dr.U.Palani

(57) Abstract :
Abstract SALES DECISION MANAGEMENT SYSTEM USING POSSIBILITY THEORY The loss of integrity of the complex systems and the so-called island perspective is critical for IT companies. It aims to share data, apps and business processes efficiently and seamlessly into an organizational platform. The sales department is a crucial component for any company, and thus, efficiency plays a vital role in the organization's overall success. The integrity of data and performance in this unit also helps to improve the performance of the company. We are trying to devise a decision-making mechanism for the integration of sales units in this innovation. Here we propose the process in two stages. The first stage, which examines the flow of information in the form of an information flow for sales activities. In the second phase, the theory of possibility, which is a probabilistic mathematical theory in fuzzy Logic, is decided to apply the system's rules based on data from the previous step and owing to uncertainty in the data from enterprises. It ensures the knowledge and planning of events that have an influential role in the integrity of the sales department are focused on achieving its objectives. Utilize accurate organizational data and be able to objectively use the outcomes of the invention.

No. of Pages : 23 No. of Claims : 4

(12) PATENT APPLICATION PUBLICATION
(21) Application No.202141027555 A
(19) INDIA
(22) Date of filing of Application :20/06/2021
(43) Publication Date : 02/07/2021

(54) Title of the invention : DESIGN AN ENERGY SAVING MANAGEMENT SYSTEM BASED ON INTERNET OF THINGS

(51) International classification	:H04L0012280000, H04L0029080000, H02J0003140000, G06Q0050060000, G01D0004000000
(31) Priority Document No	:NA
(32) Priority Date	:NA
(33) Name of priority country	:NA
(86) International Application No	:NA
Filing Date	:NA
(87) International Publication No	: NA
(61) Patent of Addition to Application Number	:NA
Filing Date	:NA
(62) Divisional to Application Number	:NA
Filing Date	:NA

(71)**Name of Applicant :**
1)Dr. S. SASIKALA DEVI
Address of Applicant :PPG College of Arts and Science, Coimbatore-641035, Tamil Nadu, India Tamil Nadu India
2)R. LAVANYA
3)Dr. S. S. SUGANYA
4)S. SUGANTHA PRIYA
5)Dr. M. PRAVEENA
6)R. SARANYA
7)Dr. R. MARUTHAVENI
8)K. SIVAPRIYA
9)Dr. P. SHIVARANJANI
10)Dr. S. MYTHILI
(72)**Name of Inventor :**
1)Dr. S. SASIKALA DEVI
2)R. LAVANYA
3)Dr. S. S. SUGANYA
4)S. SUGANTHA PRIYA
5)Dr. M. PRAVEENA
6)R. SARANYA
7)Dr. R. MARUTHAVENI
8)K. SIVAPRIYA
9)Dr. P. SHIVARANJANI
10)Dr. S. MYTHILI

(57) Abstract :
ABSTRACT DESIGN AN ENERGY SAVING MANAGEMENT SYSTEM BASED ON INTERNET OF THINGS In the past decade, critical challenge for the world is to meet the demand for energy. Power saving can be done only when consumption of energy by the load is monitored. Once monitored, adoption of suitable control method can optimize the usage of energy leading to energy saving. Conventional techniques for saving of energy along with monitoring of energy for domestic purpose or for industrial purpose are not effective such that significant amount of energy is saved. Hence, the proposed method presented in this paper is based on Internet of Things (IoT) which monitors the power consumed by load and saves energy in an efficient way. Framework of Internet of Things (IoT) can be applied to a number of applications ranging from (a) home automation to industries where connecting (b) physical things from anywhere to a network. The proposed work implements the system for energy management based on the technology of Internet of Things (IoT) where collection of data is done from (c) automated energy meter operating in a smart way, using the network of (d) GPRS which is then displayed on the website. This system is able to collect data from the load and control it in the environment of Internet of Things (IoT).

No. of Pages : 9 No. of Claims : 3

(12) PATENT APPLICATION PUBLICATION
(19) INDIA
(22) Date of filing of Application :20/06/2021
(21) Application No.202141027582 A
(43) Publication Date : 02/07/2021

(54) Title of the invention : AN IOT-DL SYSTEM FOR BREAST-CV ABNORMALITY DETECTION AND METHODS THEREOF

(51) International classification	:G06Q0010060000, G06F0003048100, G06F0003035400, A61B0005053000, A61B0005055000
(31) Priority Document No	:NA
(32) Priority Date	:NA
(33) Name of priority country	:NA
(86) International Application No	:NA
Filing Date	:NA
(87) International Publication No	: NA
(61) Patent of Addition to Application Number	:NA
Filing Date	:NA
(62) Divisional to Application Number	:NA
Filing Date	:NA

(71)**Name of Applicant :**
1)Ms.S.Saranya
Address of Applicant :Assistant Professor, Department of Computer Applications, Hindusthan College of Arts and Science, Coimbatore 641028, Tamilnadu, India Tamil Nadu India
2)Dr.Sasikala Subramani
(72)**Name of Inventor :**
1)Ms.S.Saranya
2)Dr.Sasikala Subramani

(57) Abstract :
The present disclosure pertains to an IoT-DL System and Methods Thereof to aware the abnormalities in the breast and subsequent cardio vascular parameters of the user, more specifically temporal physiological changes in real time manner, more effectively

No. of Pages : 23 No. of Claims : 8

(12) PATENT APPLICATION PUBLICATION
(21) Application No.202141027583 A
(19) INDIA
(22) Date of filing of Application :20/06/2021
(43) Publication Date : 02/07/2021

(54) Title of the invention : An IoT System incorporated with LOF and SGBMO-ANN Machine Learning for CVD Monitoring and Methods Thereof

(51) International classification	:G06N0020000000, G06N0003080000, G06N0003040000, H04L0029080000, G06K0009620000	(71)**Name of Applicant :** **1)P.Deepika** Address of Applicant :Assistant Professor, PG and Research Department of Computer Science, Hindusthan College of Arts and Science, Coimbatore 641028, Tamilnadu, India Tamil Nadu India **2)Dr.Sasikala Subramani**
(31) Priority Document No	:NA	
(32) Priority Date	:NA	
(33) Name of priority country	:NA	(72)**Name of Inventor :**
(86) International Application No	:PCT//	**1)P.Deepika**
Filing Date	:01/01/1900	**2)Dr.Sasikala Subramani**
(87) International Publication No	: NA	
(61) Patent of Addition to Application Number	:NA	
Filing Date	:NA	
(62) Divisional to Application Number	:NA	
Filing Date	:NA	

(57) Abstract :
The present disclosure pertains to an IoT System incorporated with LOF and SGBMO-ANN Machine Learning for CVD Monitoring and Methods Thereof to aware the abnormalities in the cardio vascular parameters of the user, more specifically in real time manner, using the machine learning framework Local Outlier Faactor, LOF preprocessing and Spider Monkey Optimization Artificial Neural Network, SGBMO-ANN techniques more effectively.

No. of Pages : 25 No. of Claims : 8

(12) PATENT APPLICATION PUBLICATION
(21) Application No.202141027599 A
(19) INDIA
(22) Date of filing of Application :21/06/2021
(43) Publication Date : 02/07/2021

(54) Title of the invention : PREPARATION OF NOVEL FLOWER LIPREPARATION OF NOVEL FLOWER LIKE STRUCTURE CU-ZNO/RGO COMPOSITE FILM FOR CYTOTOXICITY ACTIVITY AGAINST HUMAN EMBRYONIC KIDNEY CELL LINE (HEK293)E STRUCTURE CU-ZNO/RGO COMPOSITE FILM FOR CYTOTOXICITY ACTIVITY AGAIN

(51) International classification	:B82Y0030000000, B01J0037030000, A61L0015440000, C02F0101300000, C02F0001280000
(31) Priority Document No	:NA
(32) Priority Date	:NA
(33) Name of priority country	:NA
(86) International Application No	:NA
Filing Date	:NA
(87) International Publication No	: NA
(61) Patent of Addition to Application Number	:NA
Filing Date	:NA
(62) Divisional to Application Number	:NA
Filing Date	:NA

(71)**Name of Applicant :**
1)Rajeswari Rakkappan
Address of Applicant :26, Subramaniyapuram 2nd Street, North Extn, Karaikudi, Tamil Nadu, India 630002. Tamil Nadu India
2)Kavitha Alagappan
3)GurumalleshPrabu Halliah
4)Ananda Babu Sairam
(72)**Name of Inventor :**
1)Rajeswari Rakkappan
2)Kavitha Alagappan
3)GurumalleshPrabu Halliah
4)Ananda Babu Sairam

(57) Abstract :
The antimicrobial properties of two-dimensional materials such as graphene-based surfaces are vital for environmental and biomedical applications. Here, the improvement of the antibacterial property of reduced graphene oxide by the preparation of CuO-RGO/ZnO nanocomposite was reported. Hydrothermal method is employed for the synthesis of copper nanoflowers on RGO/ZnO nanocomposites which, finds promising applications in biological activities. Reduced graphene oxide (RGO) along with zinc oxide (ZnO), and copper nitrate were placed in an autoclave, under optimum experimental conditions, it reduces itself and forms Cu-RGO/ZnO nanocomposite, without using any chemical reductants. The synthesized nanocomposite was characterized by several techniques. The X-ray diffraction (XRD) and X-ray photo electron spectroscopic (XPS) analysis confirmed the successful deposition of Cu on the RGO-ZnO sheets. Fourier transform infrared spectroscopy (FT-IR), confirmed the presence of functional groups. Scanning e/ectron mrcroscoptc (SEM) observations showed that the prepared composite displayed a uniform morphology. The SAED patterns of the Transmission electron microscopic studies (TEM) revealed that the prepared Cu-RGO/ZnO nanocomposite has the size of 38 nm. The fabricated Cuo-RGO/ZnO nanocomposite exhibited significantly excellent performance towards gram negative bacterial and fungal pathogens. The antibacterial properties were closely associated to reactive oxygen species (ROS), simultaneously its antioxidant capacity and cytotoxicity nature was determined. This work affords an insight into the antimicrobial mechanisms of copper oxide reduced GO/ZnO composite for water treatment systems and potential applications in biomedicine fields.

No. of Pages : 21 No. of Claims : 6

(12) PATENT APPLICATION PUBLICATION
(21) Application No.202141027665 A
(19) INDIA
(22) Date of filing of Application :21/06/2021
(43) Publication Date : 02/07/2021

(54) Title of the invention : SMART BLIND ASSISTANT FOR VISUALLY IMPAIRED PERSON

(51) International classification	:G09B0021000000, A61H0003060000, A61F0009080000, G06F0003160000, G10L0013000000
(31) Priority Document No	:NA
(32) Priority Date	:NA
(33) Name of priority country	:NA
(86) International Application No	:NA
Filing Date	:NA
(87) International Publication No	: NA
(61) Patent of Addition to Application Number	:NA
Filing Date	:NA
(62) Divisional to Application Number	:NA
Filing Date	:NA

(71)**Name of Applicant :**
1)Prashamshini.L
Address of Applicant :#4, Nachukunte Gauribidnur (T), Chikballapur, Karnataka, India 561213. Karnataka India
2)Prateeksha Dinni
3)Raghavendra Rao DV
4)Raksha LN
5)Raghu K
(72)**Name of Inventor :**
1)Prashamshini.L
2)Prateeksha Dinni
3)Raghavendra Rao DV
4)Raksha LN
5)Raghu K

(57) Abstract :
Abstract In this fast-growing world where every person strives to be individualistic endure in this ruthless world, our project is developed to provide an independent life for visually impaired people and ensures their safety. It contains ultrasonic sensors and IR sensors to detect obstacles. Whenever obstacles are detected, the camera is triggered to capture the object. The captured image is sent to the processor to identify the type of objects then it is proclaimed to voice command through a speaker or via earphones connected with raspberry pi. So that blind can able to identify object present in front of them. It consists of an emergency location tracking module, which sends message in cases of any emergency to relatives of the blind with the current location of the blind using GSM and GPS module. Therefore the system provides affordable and reliable solution and also helps visually impaired people to be highly self-dependent. By this project, blind people difficult life becomes a bit easier and smooth.

No. of Pages : 8 No. of Claims : 8

(12) PATENT APPLICATION PUBLICATION
(21) Application No.202141027892 A
(19) INDIA
(22) Date of filing of Application :22/06/2021
(43) Publication Date : 02/07/2021

(54) Title of the invention : POLYMERS BLEND OF TACROLIMUS MICROBEADS

(51) International classification	:A61K0009200000, A61K0009280000, A61K0047100000, A61K0047320000, A61K0031436000	(71)**Name of Applicant :** **1)** Address of Applicant : Bulgaria (72)**Name of Inventor :** **1)**
(31) Priority Document No	:NA	
(32) Priority Date	:NA	
(33) Name of priority country	:NA	
(86) International Application No	:NA	
Filing Date	:NA	
(87) International Publication No	: NA	
(61) Patent of Addition to Application Number	:NA	
Filing Date	:NA	
(62) Divisional to Application Number	:NA	
Filing Date	:NA	

(57) Abstract :
The aim of this study was to microencapsulate Tacrolimus using an ionotropic gelation technique, using sodium alginate as a hydrophilic carrier and Carbopol 934 as a drug release modifier in various proportions, and to investigate the effects of various process parameters on physicochemical properties, such as drug:polmer ratio, calcium chloride concentration, stirring speed, and cross-linking time. The current study aims to increase bioavailability while lowering dosing frequency and dose-related side effects. There was no evidence of interactions between the drug, polymers, and excipients in FTIR studies. The particle size, percent yield, drug entrapment efficacy, in vitro release, and release kinetics of the microbeads were all evaluated. All formulations suit well with zero order kinetics, according to in vitro release kinetics studies. Hydrophilic polymers were added in various concentrations to delay the drug release, allowing the drug to be released continuously for 24 h. Scanning electron microscopy was used to examine the surface morphology and form of the optimised batch microbeads (SEM).

No. of Pages : 15 No. of Claims : 6

(12) PATENT APPLICATION PUBLICATION
(21) Application No.202141028030 A
(19) INDIA
(22) Date of filing of Application :22/06/2021
(43) Publication Date : 02/07/2021

(54) Title of the invention : HIGH STRENGTH CONCRETE WITH ALCCOFINE AS REPLACEMENT OF CEMENT

(51) International classification	:C04B0028020000, C04B0028040000, C04B0040000000, C04B0018160000, C04B0024260000
(31) Priority Document No	:NA
(32) Priority Date	:NA
(33) Name of priority country	:NA
(86) International Application No	:PCT//
Filing Date	:01/01/1900
(87) International Publication No	: NA
(61) Patent of Addition to Application Number	:NA
Filing Date	:NA
(62) Divisional to Application Number	:NA
Filing Date	:NA

(71)**Name of Applicant :**
1)Dr N R DAKSHINA MURTHY
Address of Applicant :Associate Professor, Civil Engineering, CBIT, Gandipet, Telangana 500075, India Telangana India
(72)**Name of Inventor :**
1)Dr N R DAKSHINA MURTHY
2)Dr K. JAGANNADHA RAO
3)Dr D. RAMA SESHU

(57) Abstract :
ABSTRACT HIGH STRENGTH CONCRETE WITH ALCCOFINE AS REPLACEMENT OF CEMENT A high performance concrete (102), the HPC (102) comprising: cement (104) in a range of 325 kilograms to 515 kilograms having a strength of about 70 N/mm2 at 28 days; fine aggregates (106) having a silt content less than 4% by weight, wherein the fine aggregates is of zone 1 or zone 2; coarse aggregates (108) having a specific gravity of 2.83 and water absorption of 0.2% by weight; and alccofine (110) as an admixture, wherein the alccofine is added in fixed a ratio of 10% by weight.

No. of Pages : 28 No. of Claims : 10

(12) PATENT APPLICATION PUBLICATION
(19) INDIA
(22) Date of filing of Application :22/06/2021
(21) Application No.202141028054 A
(43) Publication Date : 02/07/2021

(54) Title of the invention : A SYSTEM AND METHOD FOR PROCESSING RANDOM ACCESS PROCEDURES IN RELAY USING STATE-ACTION-REWARD-STATE-ACTION (SARSA)

(51) International classification	:H04W0074080000, H04W0074000000, H04W0084180000, H04B0007155000, H04W0004700000
(31) Priority Document No	:NA
(32) Priority Date	:NA
(33) Name of priority country	:NA
(86) International Application No	:PCT//
Filing Date	:01/01/1900
(87) International Publication No	: NA
(61) Patent of Addition to Application Number	:NA
Filing Date	:NA
(62) Divisional to Application Number	:NA
Filing Date	:NA

(71)**Name of Applicant :**
1)Ms.Sri Silpa Padmanabhuni
Address of Applicant :Associate Professor, Department of Computer Science and Engineering, Potti Sriramulu Chalavadi Mallikarjuna Rao College of Engineering & Technology, Vijayawada, Andhra Pradesh, India. Pin Code:520001 Andhra Pradesh India
2)Dr.Pilli Lalitha Kumari
3)Dr.S.Sivakumar
4)Dr.K.Amaresh
5)Mr.Kommalapati Rajesh
6)Mr.Manohar Jayampu
7)Dr.Sushma Jaiswal
8)Mr.Tarun Jaiswal
9)Dr.Rabinarayan Satpathy
10)Mr.Amara S A L G Gopala Gupta
(72)**Name of Inventor :**
1)Ms.Sri Silpa Padmanabhuni
2)Dr.Pilli Lalitha Kumari
3)Dr.S.Sivakumar
4)Dr.K.Amaresh
5)Mr.Kommalapati Rajesh
6)Mr.Manohar Jayampu
7)Dr.Sushma Jaiswal
8)Mr.Tarun Jaiswal
9)Dr.Rabinarayan Satpathy
10)Mr.Amara S A L G Gopala Gupta

(57) Abstract :
ABSTRACT A SYSTEM AND METHOD FOR PROCESSING RANDOM ACCESS PROCEDURES IN RELAY USING STATE-ACTION-REWARD-STATE-ACTION (SARSA) [034] The present invention discloses a system and method for processing random access procedures in relay using State-Action-Reward-State-Action (SARSA). The method and system includes, but not limited to, a processing unit, which operates and selects the actuation of relays particularly to a low power random access relay in the IoT environment or in a wireless sensor network. Further, the processing unit is configured to have a State-Action-Reward-State-Action (SARSA) modelling to process the selected relay having a slot time distribution to each downstream joint while the relay is in demand.

No. of Pages : 21 No. of Claims : 8

(12) PATENT APPLICATION PUBLICATION
(21) Application No.202141028076 A
(19) INDIA
(22) Date of filing of Application :22/06/2021
(43) Publication Date : 02/07/2021

(54) Title of the invention : Novel substrate formulation for cultivation of medicinal mushrooms

(51) International classification	:A61K0008640000, C05F0011000000, C12N0001140000, A23L0033175000, A23L0027210000	(71)**Name of Applicant :** **1)MALLIPATHRA NUTRACEUTICAL PVT LTD** Address of Applicant :TECHNOLOGY INCUBATION CENTER, SIR MVIT CAMPUS, HUNASAMARAHALLI, INTERNATIONAL AIRPORT ROAD, KRISHNADEVARAYANAGAR, BANGALORE-562157 Karnataka India
(31) Priority Document No	:NA	
(32) Priority Date	:NA	
(33) Name of priority country	:NA	(72)**Name of Inventor :**
(86) International Application No	:PCT//	**1)Dr. Mousumi Mondal**
Filing Date	:01/01/1900	**2)Srinivas B V**
(87) International Publication No	: NA	
(61) Patent of Addition to Application Number	:NA	
Filing Date	:NA	
(62) Divisional to Application Number	:NA	
Filing Date	:NA	

(57) Abstract :
In a first aspect, the invention provides the composition of substrate for the artificial cultivation of Cordyceps mushrooms. It provides the method of producing the same in a shorter duration with enhanced medicinal properties and active ingredients. The composition of the substrate comprises of proportions of carbon, nitrogen & amino acids. In the present invention Bambusoideae seeds in combination with silk protein sericin forms the novel substrate combination. This amino acid composition of sericin being superior in terms of Aspartic acid which is crucial for mycelial growth can replace the otherwise expensive source-peptone. The present invention depicts the optimum combination of Bambusoideae seeds as the major carbohydrate source of 60% to support mycelial growth, Sericin a natural source of amino acids critical for mycelial growth & fructification which includes 16% Aspartic acid and 30% Serine. This combination depicts enhanced mycelial growth, enhances biomass production and productivity, improves extracellular Cordycepinc and other bioactive production and productivity, increases yield, enhances fructification, reduces duration of production to 30 days as opposed to 365 days in nature & enhances the active ingredient composition of Cordycepin, Cordycepic acid, polysaccharides etc.,

No. of Pages : 7 No. of Claims : 5

(12) PATENT APPLICATION PUBLICATION
(19) INDIA
(22) Date of filing of Application :23/06/2021

(21) Application No.202141028084 A
(43) Publication Date : 02/07/2021

(54) Title of the invention : VDBA BASED FIRST ORDER ALL PASS FILTER AND ITS APPLICATIONS

(51) International classification	:H02J0003010000, H05K0003400000, H05K0003240000, G01N0033500000, G06F0001160000
(31) Priority Document No	:NA
(32) Priority Date	:NA
(33) Name of priority country	:NA
(86) International Application No	:NA
Filing Date	:NA
(87) International Publication No	: NA
(61) Patent of Addition to Application Number	:NA
Filing Date	:NA
(62) Divisional to Application Number	:NA
Filing Date	:NA

(71)**Name of Applicant :**
1)VIT-AP UNIVERSITY
Address of Applicant :VIT-AP UNIVERSITY, BESIDE AP SECRETARIAT, NEAR VIJAYAWADA, ANDHRA PRADESH - INDIA 522 237. Andhra Pradesh India
(72)**Name of Inventor :**
1)Dr. GURUMURTHY KOMANAPALLI
2)Dr. PRIYANKA GUPTA

(57) Abstract :
A Voltage differencing buffered amplifier (VDBA) based first order all pass filter (APF) is presented. The proposed circuit is realized using a single VDBA, four resistors and a grounded capacitor which provides voltage output at low impedance with electronically tunable gain. The proposed circuit can be configured to provide inverting or non-inverting outputs. Two quadrature phase oscillators (QPO) and a multiphase sinusoidal oscillator (MSO) are realized as application examples of proposed APF. Functionality of proposed structures is verified through SPICE simulations using 0.18 urn CMOS process parameters. Monte Carlo and PVT analyses are also performed to verify the low sensitivities of proposed APF and its applications. The proposals are verified experimentally also using commercially available ICs AD844 for VDBA realization

No. of Pages : 42 No. of Claims : 4

(12) PATENT APPLICATION PUBLICATION
(21) Application No.202141028086 A
(19) INDIA
(22) Date of filing of Application :23/06/2021
(43) Publication Date : 02/07/2021

(54) Title of the invention : COGNITIVELY MANAGING DEPRESSION LEVELS IN AN INDIVIDUAL

(51) International classification	:H04L0029080000, A61B0005160000, G16H0050300000, G06N0005020000, G06N0020000000
(31) Priority Document No	:NA
(32) Priority Date	:NA
(33) Name of priority country	:NA
(86) International Application No	:NA
Filing Date	:NA
(87) International Publication No	: NA
(61) Patent of Addition to Application Number	:NA
Filing Date	:NA
(62) Divisional to Application Number	:NA
Filing Date	:NA

(71)**Name of Applicant :**
1) Dr. ANNAPURNA P PATIL
Address of Applicant :RAMAIAH INSTITUTE OF TECHNOLOGY, BENGALURU AFFILIATED TO VISVESVARAYA TECHNOLOGICAL UNIVERSTIY, BELAGAVI, KARNATAKA, INDIA 560054. Karnataka India
2)SHREEKANT JERE
(72)**Name of Inventor :**
1) Dr. ANNAPURNA P PATIL
2)SHREEKANT JERE
3)SUMUKH N. ARADHYA
4)VARDAN NARULA
5)SONIA BENNY THOMAS
6)GARIMA MISHRA

(57) Abstract :
A cognitive method and system for managing depression levels in individual involves monitoring the individuals activities in a work environment (1), social media (2), and gamification-based assignments (3) to analyze the individuals mood and attentiveness (4). In addition, the cognitive method and system utilizes wearable and surrounding IoT devices (6) to track the individuals food habits/appetite (8) and sleeping patterns (7) and trains an artificial intelligence (Al) model (5) with a history of the individuals activities and IoT data (6) to calibrate the mental health or depression levels of the individual. In addition, the cognitive method and system generate a digital twin companion (of close relative, friend, parents, or loved ones) animations in a virtual reality environment (9) to engage the individual through voice interactions or activities on a timely basis to control the discrepancy in the mental health of the individual.

No. of Pages : 13 No. of Claims : 10

(12) PATENT APPLICATION PUBLICATION
(21) Application No.202141028508 A
(19) INDIA
(22) Date of filing of Application :24/06/2021
(43) Publication Date : 02/07/2021

(54) Title of the invention : FARMCHAIN INTELLIGENT NETWORK SYSTEM (FINS)

(51) International classification	:G08B0021180000, H04L0009080000, H04L0029060000, H04W0004440000, H04N0007180000
(31) Priority Document No	:NA
(32) Priority Date	:NA
(33) Name of priority country	:NA
(86) International Application No	:NA
Filing Date	:NA
(87) International Publication No	: NA
(61) Patent of Addition to Application Number	:NA
Filing Date	:NA
(62) Divisional to Application Number	:NA
Filing Date	:NA

(71)**Name of Applicant :**
1)Neenu Johnson
Address of Applicant :Kozhippatt House, Kizhakkambalam P.O., Kizhakkambalam, Ernakulam District, Kerala 683562 Kerala India
2)Dr. Santosh Kumar M.B.
3)Dr. Dhannia T
(72)**Name of Inventor :**
1)Neenu Johnson
2)Dr. Santosh Kumar M.B.
3)Dr. Dhannia T

(57) Abstract :
The disclosed invention relates to information management technology and in particular to a method and process for providing farmchain management. The disclosed invention improves a communication between farmers, government, buyers, and other agricultural stakeholders. The disclosed invention provides a system (100) for managing a distributed farmchain comprising a data receiving unit (110) configured to receive sensed data and visual data; a data storage unit (112) configured to store the received sensed and crop data in a blockchain network (106); a processing unit (114) configured to: determine numerical values of the parameters; compare the numerical values of the parameters with predefined range of safe values; generate a first notification when the determined numerical values of the parameters is determined to be unsafe based on the comparison; and a communication unit (116) configured to transmit the generated first notification to a user device (108a-108n) associated with secondary users.

No. of Pages : 21 No. of Claims : 6

(12) PATENT APPLICATION PUBLICATION
(21) Application No.202141028527 A
(19) INDIA
(22) Date of filing of Application :25/06/2021
(43) Publication Date : 02/07/2021

(54) Title of the invention : A SYSTEM AND A METHOD FOR DYNAMICALLY AND CUSTOMIZED ASSISTING IN THE SELECTION OF THE HIGHER EDUCATION COURSE AND THEIR CORRESPONDING UNIVERSITIES FOR THE STUDENTS

(51) International classification	:G06Q0050200000, G09B0007000000, G06Q0010000000, G09B0007020000, G06Q0030020000
(31) Priority Document No	:NA
(32) Priority Date	:NA
(33) Name of priority country	:NA
(86) International Application No	:PCT//
Filing Date	:01/01/1900
(87) International Publication No	: NA
(61) Patent of Addition to Application Number	:NA
Filing Date	:NA
(62) Divisional to Application Number	:NA
Filing Date	:NA

(71)**Name of Applicant :**
1)Dr.B.Sendilkumar, Dean&Director
Address of Applicant :School of Allied Health Sciences, Vinayaka Missions Research Foundation-Deemed to be University, Salem Tamil Nadu India 636308 Tamil Nadu India
2)Dr.T.Priyamathi ,Associate Professor & Incharge ,Dept.of Public Health
(72)**Name of Inventor :**
1)Dr.B.Sendilkumar, Dean&Director
2)Dr.T.Priyamathi ,Associate Professor & Incharge ,Dept.of Public Health

(57) Abstract :
The invention relates to a system and method for dynamically and customized search tool designed to assist the school students in finalizing their higher education courses and college. The system for dynamically and customized assisting the school students in the selection of a course and college of their requirement comprises a graphical user interface (GUI) on an user equipment for interacting with the end user and collecting the requirements of the students; a college selection, computing and identification software and logic in communication with the said graphical user interface; a processor configured for selecting the college education institution and college course teaching data or career data, and college geographical location data to display on the dynamic graphical user interface and configured for receiving the student data input from one or more users, the student data comprising text, audio, video or multimedia based content indicating the preferences and requirements of the student and a user database comprising memory adapted for storing personal profile data for the one or more students that is received by the dynamic GUI interface, the personal profile data selected from the user forum entries. The system is further configured to receive user data gathered from a prospective student who has completed or about to complete the school education; analyse the gathered data for relationships between one or more variables which correlate with actual college student satisfaction and with the college facilities and experience; and identify, with the computer, one or more appropriate colleges for the prospective college student to consider by determining an association between the prospective college student's gathered data and one or more of the variables which correlate with actual college student satisfaction with their college providing facilities and finally deliver a generated list of at least one of the following recommendations to said student in the GUI: (i) required courses provided by the total post-secondary institutions; (ii) ranking of the institutions providing the desired courses; and (iii) suggesting the geographical location of the one or more post-secondary institutions according to said user data and a type and size of the educational institution, and an admission selectivity of the educational institution.

No. of Pages : 14 No. of Claims : 5

(12) PATENT APPLICATION PUBLICATION
(21) Application No.202141028751 A
(19) INDIA
(22) Date of filing of Application :25/06/2021
(43) Publication Date : 02/07/2021

(54) Title of the invention : Modelling and Simulation of Wireless Electric vehicle charging using Solar and Wind energy

(51) International classification	:H02J0007020000, H02J0007350000, H02S0010120000, B60L0008000000, B60K0016000000
(31) Priority Document No	:NA
(32) Priority Date	:NA
(33) Name of priority country	:NA
(86) International Application No	:PCT//
Filing Date	:01/01/1900
(87) International Publication No	: NA
(61) Patent of Addition to Application Number	:NA
Filing Date	:NA
(62) Divisional to Application Number	:NA
Filing Date	:NA

(71)**Name of Applicant :**
1)Prof. K Nethra
Address of Applicant :Prof. K Nethra Assistant Professor School of Electrical & Electronics Engineering REVA university, Bangalore - 64 Karnataka India
2)Dr. Bansilal Bairwa
3)Christina Sundari V
(72)**Name of Inventor :**
1)Prof. K Nethra
2)Dr. Bansilal Bairwa
3)Christina Sundari V

(57) Abstract :
The fuel existing vehicles produce air, noise pollution and it produces many other effects on an environment like global warming, green-house effect etc. Due to these impacts, conventional fuel for vehicles is changing to battery. Hence there is increase in number of EV™s recently. Charging station is one of basic need for them. Charging time also to be reduced to a short duration. In EV™s there is a major disadvantage that it could not travel more than few hundred kilometres. For solving this issue, if the battery capacity of EV increased, then weight and size also increases thus it is not possible. Hence there is a need for setting up and developing of charging stations within the short range of distances. So, in this project we are aiming for modelling and simulation of wireless electric vehicle charging using solar and wind energy. The battery bank in charging station will be charged from solar and wind based on availability. The wireless charging of Electric vehicle is based on inductive power transfer between two mutually coupled coils, one is primary • connected to rechargeable battery bank, charged by solar and wind energy. An inverter is connected on this primary coil side. And other secondary coil • is connected to battery of electric vehicle through rectifier and voltage regulator. The advantages provided by the wireless charging are in terms of safety, comfort, as the driver can avoid the danger of using power cord and he needs to park vehicle without the need of plug-in operation to start charge battery of vehicle. A conventional vehicle fuel filling from petrol, diesel stations are common all around. Similarly, EV charging stations has to be constructed to charge the electric vehicles. Long distance travel would happen only if battery charging facilities are available in intermediate locations. Nowadays inexhaustible energy plays a great role in power system. Integration of PV and wind is useful because energy will be generated continuously irrespective of seasonal and time changes. PV and wind energy resources are renewable, inexhaustible and available resource for future energy generation. The use of solar and wind energy is pollution free and eco-friendly in nature. Using PV and wind energy generation as source for charging electric vehicles reduces the fossil fuel dependency and advantageous to power grid. However, the overcharging of battery is prevented by using suitable charge controllers. By taking the dynamic charging needs of EV™s, the design of charging circuit is formulated and validated in MATLAB Simulink

No. of Pages : 15 No. of Claims : 3

(12) PATENT APPLICATION PUBLICATION
(19) INDIA
(22) Date of filing of Application :26/06/2021
(21) Application No.202141028807 A
(43) Publication Date : 02/07/2021

(54) Title of the invention : RECYCLE OF SEA FOOD WASTE INTO MOBILE CASES BY 3D PRINTING

(51) International classification	:G06Q0010000000, B29B0017000000, B29B0017040000, C08J0011060000, C08J0011100000
(31) Priority Document No	:NA
(32) Priority Date	:NA
(33) Name of priority country	:NA
(86) International Application No	:NA
Filing Date	:NA
(87) International Publication No	: NA
(61) Patent of Addition to Application Number	:NA
Filing Date	:NA
(62) Divisional to Application Number	:NA
Filing Date	:NA

(71)**Name of Applicant :**
1)Mr. A. Joseph Arockiam
Address of Applicant :Assistant Professor, Department of Automobile Engineering, Arasu Engineering College, Kumbakonam Tamil Nadu India
2)Dr. Balakrishnan S
3)Dr. Nirmala Devi Danabala,
4)Dr. Patel Badari Narayana,
5)Dr. Asheesh Kumar
6)Dr Pal Pandian P
7)Mr. Gurupranes SV
8)Dr Ruchin Kacker
9)Dr S. Rajesh
10)Mr. D Karunakaran
11)Mr. R. G. Padmanabhan
12)Mr. G. B. Sathishkumar
(72)**Name of Inventor :**
1)Mr. A. Joseph Arockiam
2)Dr. Balakrishnan S
3)Dr. Nirmala Devi Danabala,
4)Dr. Patel Badari Narayana,
5)Dr. Asheesh Kumar
6)Dr Pal Pandian P
7)Mr. Gurupranes SV
8)Dr Ruchin Kacker
9)Dr S. Rajesh
10)Mr. D Karunakaran
11)Mr. R. G. Padmanabhan
12)Mr. G. B. Sathishkumar

(57) Abstract :
The problem of plastic recycling has recently become one of the significant environmental protection and waste management concerns. In many sectors of everyday life and business, polymer materials have been discovered to have applicable. In addition to their widespread usage, plastic wastes were also a concern since they remained persistent and harmful waste after their removal from use. The invention will lead to the first step towards reducing pollution via the replacement of synthetic polymer for mobile accessories into biodegradable waste (seafood waste). Here, vast quantities of trash from marine food in this civilization are accessible. One of the most environmentally friendly issues is the handling of fish waste. The waste product may be utilized for recycled materials such as PLA. As one of the most innovative materials created for various uses, PLA has attracted considerable attention. The polymer is a biodegradable thermoplastic, making it very appealing for biological applications. Statistically unaltered is the tensile elasticity module. Even if the average mechanical characteristics are identical before and after recycling. There were a vast number of mobile cases, and individuals continually replace the mobile suit. This is why society has to be overwhelmed by masses of pollution. With the technique of 3D printing, we can produce mobile cabinet cases with the substitution of fish-scale polylactic acid (PLA) filament.

No. of Pages : 24 No. of Claims : 4

(12) PATENT APPLICATION PUBLICATION
(21) Application No.202141028814 A
(19) INDIA
(22) Date of filing of Application :26/06/2021
(43) Publication Date : 02/07/2021

(54) Title of the invention : PERFORMANCE IDENTIFICATION METHOD FOR HV INSULATOR MATERIALS

(51) International classification	:H01B0017320000, C08L0083040000, G06F0030230000, F28F0021020000, H01G0004200000
(31) Priority Document No	:NA
(32) Priority Date	:NA
(33) Name of priority country	:NA
(86) International Application No	:NA
Filing Date	:NA
(87) International Publication No	: NA
(61) Patent of Addition to Application Number	:NA
Filing Date	:NA
(62) Divisional to Application Number	:NA
Filing Date	:NA

(71)**Name of Applicant :**
1)Sreesha Achar. H. B
Address of Applicant :UG Student, School of Electrical and Electronics Engineering, REVA University, Rukmini Knowledge Park, Kattigenahalli, Yelahanka, Bengaluru, Karnataka 560064, India Karnataka India
2)Rajini. H
3)Udaykiran.G. S
4)Saahithi.S
5)Raghu.C. N
6)Manish Bharat
(72)**Name of Inventor :**
1)Sreesha Achar. H. B
2)Rajini. H
3)Udaykiran.G. S
4)Saahithi.S
5)Raghu.C. N
6)Manish Bharat

(57) Abstract :
Ceramic Insulators are used as electrical insulators ever since the introduction of power system. These insulators provide mechanical strength to the live lines and electrically isolate them. Because of its rigid structure, heavy weight, more over pollution flash-over, which is one of the main disadvantages, they are being replaced by polymeric insulators, these days. These polymeric insulators are light in weight and are comparatively less prone to pollution flashover because of its hydrophilic nature and are gaining more popularity these days. In the manufacturing process of these insulators, the check on polymeric materials used becomes very important as, the life of polymeric materials depends on the composition of materials used in producing the insulators. In this project, polymeric material samples with different compositions of SiR are evaluated for their electrical and mechanical properties. The electric field simulation of polymeric material sample is carried out using ANSYS software. An attempt has been made to bring out best composition of Silicone Rubber material which can have better performance of insulator.

No. of Pages : 19 No. of Claims : 3

(12) PATENT APPLICATION PUBLICATION
(21) Application No.202141028837 A
(19) INDIA
(22) Date of filing of Application :27/06/2021
(43) Publication Date : 02/07/2021

(54) Title of the invention : ARTIFICIAL INTELLIGENCE BASED AUTONOMOUS ECG MONITORING SYSTEM

(51) International classification	:A61B0005000000, A61B0005045200, A61B0005042800, A61B0005046000, A61B0005040000
(31) Priority Document No	:NA
(32) Priority Date	:NA
(33) Name of priority country	:NA
(86) International Application No	:NA
Filing Date	:NA
(87) International Publication No	: NA
(61) Patent of Addition to Application Number	:NA
Filing Date	:NA
(62) Divisional to Application Number	:NA
Filing Date	:NA

(71)**Name of Applicant :**
1)Dr. Sivasankari.S,Vellore Institute of Technology
Address of Applicant :Assistant Professor(Senior Grade 1) Department of Database Systems, School of Computer Science and Engineering Vellore Institute of Technology Tiruvalam Road Vellore Tamil Nadu India 632014 Tamil Nadu India
2)Dr.R.Jothi Chitra,Velammal Institute of Technology
3)Dr.M.Sivarathinabala,Velammal Institute of Technology
4)Mrs.D. Jeyamani Latha,Velammal Institute of Technology
5)Mr. Biswajit Nayak,Sri Sri University
6)Dr. Maheshkumar Lahu Mane,Shikshan Maharshi Guruvarya R. G. Shinde Mahavidyalaya
7)Dr Raju B S,REVA University
8)Ms. Dimple Sukhija,Indore Institute of Management and Research
9)Mr. Aamir khan,Glocal university
10)Dr. Ahmed Mateen,University of Agriculture Faisalabad

(72)**Name of Inventor :**
1)Dr. Sivasankari.S,Vellore Institute of Technology
2)Dr.R.Jothi Chitra,Velammal Institute of Technology
3)Dr.M.Sivarathinabala,Velammal Institute of Technology
4)Mrs.D. Jeyamani Latha,Velammal Institute of Technology
5)Mr. Biswajit Nayak,Sri Sri University
6)Dr. Maheshkumar Lahu Mane,Shikshan Maharshi Guruvarya R. G. Shinde Mahavidyalaya
7)Dr Raju B S,REVA University
8)Ms. Dimple Sukhija,Indore Institute of Management and Research
9)Mr. Aamir khan,Glocal university
10)Dr. Ahmed Mateen,University of Agriculture Faisalabad

(57) Abstract :
Human lifetime is drastically affected by heart disease as it affects normal heart activity. Heart signal is represented by Electrocardiograph (ECG) which contains intervals, waves and segments. This invention focuses on detection of cardiac arrhythmia by differentiating normal ECG signal and abnormal ECG signal which involves three steps where the first step involves removal of noise from these biological signals by designing of specific filters namely band reject filter with the cut off frequencies in the range of 57-63 Hz for removal of interferences due to power line and usage of band pass filter with cut off frequencies in the range of 0.05 -30 Hz for removal of signals due to patient motion or patient™s chest movement. Second step involves computation of step variables and feature extraction using wavelet transform algorithm decomposing signals using wavelets. Third step involves artificial neural network (ANN) algorithm which utilizes extracted features along with parameters as input gains knowledge by training the classifier which is able to analyze ECG signals for presence of arrhythmia implemented using MATLAB R2014b.

No. of Pages : 11 No. of Claims : 6

(12) PATENT APPLICATION PUBLICATION
(21) Application No.202141029267 A
(19) INDIA
(22) Date of filing of Application :29/06/2021
(43) Publication Date : 02/07/2021

(54) Title of the invention : DESIGN AND FABRICATION OF EMERGENCY STRETCHER USING SPRING-LINKAGE SUSPENSION SYSTEM

(51) International classification	:A61G0001040000, A61G0001020000, B60N0002500000, A61G0001060000, B62K0025280000	(71)**Name of Applicant :** **1)Dr.P.Gurusamy** Address of Applicant :Department of Mechanical Engineering, Chennai Institute of Technology,Kundrathur Chennai-600069 Tamil Nadu India
(31) Priority Document No	:NA	**2)Dr.P.Nagasankar**
(32) Priority Date	:NA	**3)Dr.V.K.Shanmuganathan**
(33) Name of priority country	:NA	**4)Dr.N.Gayathri**
(86) International Application No	:PCT//	(72)**Name of Inventor :**
Filing Date	:01/01/1900	**1)Dr.P.Gurusamy**
(87) International Publication No	: NA	**2)Dr.P.Nagasankar**
(61) Patent of Addition to Application Number	:NA	**3)Dr.V.K.Shanmuganathan**
Filing Date	:NA	**4)Dr.N.Gayathri**
(62) Divisional to Application Number	:NA	
Filing Date	:NA	

(57) Abstract :
This model is concerned with introducing a spring-linkage suspension system for emergency stretchers that reduces the stress impact on the patient. Initially, the impact on the wheels of the gurney is carried to the suspension linkages. The linkages will reduce the magnitude of the forces and moments at the top of the gurney by the action of springs so that the patient on the stretcher backboard enjoys a comfortable journey. Any unevenness on the road exerts a shock on the wheels. When this shock travels through a suspension linkage, the linkage will undergo small displacement and moment. The linkage is capable of rotating in the socket provided at the top of the gurney frame. The displacement and moment due to any shock will tend the linkage to tense/ enjoys compress the horizontal springs located at the top of the gurney. As the shock spreads to the other side through the rigid members, the other spring creates a compensating compression/tension. This alternate compression and tension lead to the damping of the impact. The resultant moment and displacement on the stretcher backboard are made negligible and so the patient comfortable travel.

No. of Pages : 25 No. of Claims : 7

(12) PATENT APPLICATION PUBLICATION
(21) Application No.202141029277 A
(19) INDIA
(22) Date of filing of Application :29/06/2021
(43) Publication Date : 02/07/2021

(54) Title of the invention : Design of an Asymmetrical Multilevel Inverter Using Cascaded H Bridges

(51) International classification	:H02J0003380000, H02M0007538700, H02M0007480000, H02J0003010000, H02M0007497000
(31) Priority Document No	:NA
(32) Priority Date	:NA
(33) Name of priority country	:NA
(86) International Application No	:PCT//
Filing Date	:01/01/1900
(87) International Publication No	: NA
(61) Patent of Addition to Application Number	:NA
Filing Date	:NA
(62) Divisional to Application Number	:NA
Filing Date	:NA

(71)**Name of Applicant :**
1)Dr. Rama Sudha Kasibhatla
Address of Applicant :Professor, Department of Electrical Engineering, AU College of Engineering (A), Andhra University, Visakhapatnam, Andhra Pradesh India. Andhra Pradesh India
2)Dr. Vijaya Santhi Rajamahanthi
3)Mrs.K.Aravinda Shilpa
4)Mrs.M.Revathi
5)Mrs.M.Divya
6)Ms. Venkat Pankaj Lahari Molleti
7)Dr. Chandra Sekhar Akkapeddi
(72)**Name of Inventor :**
1)Dr. Rama Sudha Kasibhatla
2)Dr. Vijaya Santhi Rajamahanthi
3)Mrs.K.Aravinda Shilpa
4)Mrs.M.Revathi
5)Mrs.M.Divya
6)Ms. Venkat Pankaj Lahari Molleti
7)Dr. Chandra Sekhar Akkapeddi

(57) Abstract :
Inverter are best known for their efficient performance in medium voltages and high power applications. In this chapter, inverter of thirty one level is designed, with a combination of three H-bridge and DC sources taken in binary configuration. It results in a stepped alternating voltage as output with desired minimum total harmonic distortion. The efficiency and operation of this inverter was verified using MATLAB/Simulink simulation results and with experimental implementation.

No. of Pages : 15 No. of Claims : 8

(12) PATENT APPLICATION PUBLICATION
(21) Application No.202141029516 A
(19) INDIA
(22) Date of filing of Application :30/06/2021
(43) Publication Date : 02/07/2021

(54) Title of the invention : Preservation of Higher Accuracy Computing in Resource-Constrained Devices Using Deep Neural Approach by Knowledge Distillation Method

(51) International classification	:G06N0003040000, G06N0003080000, H04L0029080000, G06N0003063000, G06N0020000000
(31) Priority Document No	:NA
(32) Priority Date	:NA
(33) Name of priority country	:NA
(86) International Application No	:PCT//
Filing Date	:01/01/1900
(87) International Publication No	: NA
(61) Patent of Addition to Application Number	:NA
Filing Date	:NA
(62) Divisional to Application Number	:NA
Filing Date	:NA

(71)**Name of Applicant :**
1)S.S.SARANYA,Assistant Professor
Address of Applicant :Department of Computer Science & Engineering School of computing,SRM institute of science & Technology Kattankulathur Campus,Potheri Chennai Tamilnadu India 603203 Tamil Nadu India
2)Dr.N.Sabiyath Fatima,Associate Professor
(72)**Name of Inventor :**
1)S.S.SARANYA,Assistant Professor
2)Dr.N.Sabiyath Fatima,Associate Professor

(57) Abstract :
The embedded type of devices in IOT generally depends upon the resource constraints which include memory capabilities, low power consumption and reliable in cost. The constrained devices such as edge server are handled at the end nodes. The end nodes such as sensors and actuators are connected using the gateway devices which connect the IOT cloud-based platform. A wireless device which has the limited set of processing and storage based capability which runs based on the wireless medium or batteries is the resource constrained device. Resource constrained devices provides the efficient way of limited processing with the maximal data output along with the minimal power as input. These are generally cost effective as it consumes less energy and power consumption in devices. The edge server is a type of resource-constrained devices which is the entry point of the network and application. In this paper, the research is based upon the proposal model of resource constrained devices by reducing the parameters using the DNN. The DNN model parameters reduce the memory, execution latency by attaining the higher accuracy. To preserve the higher accuracy in the device computation, the Knowledge Distillation Method is proposed. The knowledge distillation method determines the output predictions of larger DNN into the smaller DNN trained sets. This methodology reduces the trained model by compressing the model accordingly. These smaller DNN predicts the output and behaviors similar to the larger DNN. Smaller DNN predicts approximately equal to the larger DNN. Knowledge Distillation Method is used in several applications in machine learning such as natural language processing, AI, Detection of objects and neural networks graph correspondingly. Keywords: Edge server, Knowledge Distillation Method, Deep Neural Network, IOT, Resource-constrained devices.

No. of Pages : 13 No. of Claims : 7

(12) PATENT APPLICATION PUBLICATION
(21) Application No.202143027924 A
(19) INDIA
(22) Date of filing of Application :22/06/2021
(43) Publication Date : 02/07/2021

(54) Title of the invention : AN INTELLIGENT SYSTEM AND DEVICE THEREOF TO EXTRACT PERTINENT DETAILS OF INDIAN MEDICINAL HERBS

(51) International classification	:G06K0009460000, G06K0009620000, G06T0007110000, G06K0009000000, G06T0007000000
(31) Priority Document No	:NA
(32) Priority Date	:NA
(33) Name of priority country	:NA
(86) International Application No	:PCT//
Filing Date	:01/01/1900
(87) International Publication No	: NA
(61) Patent of Addition to Application Number	:
Filed on	:01/01/1900
(62) Divisional to Application Number	:NA
Filing Date	:NA

(71)**Name of Applicant :**
1)Roopashree Shailendra
Address of Applicant :Assistant Professor, Department of Computer Science and Engineering, Dayananda Sagar University, #32A, Phase I, Classic Orchards, Behind Meenakshi Temple, B G Road, Bengaluru, Karnataka, India 560076. Karnataka India
2)Anitha J
(72)**Name of Inventor :**
1)Roopashree Shailendra
2)Anitha J

(57) Abstract :
System and method to identify and extract pertinent details of Indian medicinal herbs are provided. The system includes a processing subsystem. The processing subsystem includes an image acquisition module configured to acquire at least one sample image of the corresponding one or more herbs, a pre-processing module configured to apply an image segmentation technique on the at least one sample image, a feature extraction module configured to extract one or more sample features; building a machine learning algorithm that combines two techniques viz., Histogram of Oriented Gradients (HoG) and Oriented FAST and Rotated BRIEF (ORB) and the Bag of Visual words technique along with the originally claimed technique (Scale Invariant Feature Transform (SIFT)). The current invention further describes the adaption of the current method in the form of a mobile or an internet-of-things (IOT) solution to predict the medical plant species (Refer 1)

No. of Pages : 30 No. of Claims : 10

(12) PATENT APPLICATION PUBLICATION
(21) Application No.202144019039 A
(19) INDIA
(22) Date of filing of Application :26/04/2021
(43) Publication Date : 02/07/2021

(54) Title of the invention : REAL-TIME VEHICLE NUMBER AND HELMET DETECTION USING DEEP LEARNING

(51) International classification	:G08G0001017000, A42B0003040000, G06K0009320000, G08G0001040000, G08G0001054000
(31) Priority Document No	:India
(32) Priority Date	:26/04/2021
(33) Name of priority country	:India
(86) International Application No	:NA
Filing Date	:NA
(87) International Publication No	: NA
(61) Patent of Addition to Application Number	:NA
Filing Date	:NA
(62) Divisional to Application Number	:NA
Filing Date	:NA

(71)**Name of Applicant :**
1)Aruna Kumara B
Address of Applicant :Assistant Professor School of Computing and Information Technology REVA University Karnataka India
(72)**Name of Inventor :**
1)Aruna Kumara B
2)Dr. Mallikarjun M Kodabagi
3)Bhavana N
4)Surendra Babu K N
5)Raghavendra Nayaka P
6)Syed Thouheed Ahmed
7)Gopinath R

(57) Abstract :
The rapid changes in lifestyle and exponential growth of the population made exponential growth in the vehicles particularly those used for personal transport. This development other than its positive perspectives accompanies a worry of saving life on the street because of mishaps. As indicated by the overview most of the existence lost in street accidents is because of the carelessness of wearing a helmet on a bike. The requirement of the traffic rules with respect to this infringement ends up being a test because of the thick populace and low pace of recognition which is essentially brought about by the absence of a mechanized framework to distinguish the infringement and make the fundamental move. The developing populace and the developing number of vehicles cause the manual frameworks set up to fall flat in checking the issue. Consequently, the mechanical headways in the field of AI are needed to adapt up to the difficulties like street wellbeing and traffic rule infringement. The proposed work detects two-wheeler riders without a helmet and vehicle number using deep learning. The proposed work first captures the real picture of road traffic later it distinguishes between the two-wheelers with the other vehicles. The method later checks whether the rider and pillion rider of the vehicle wears the helmet or not. In the event that any of the riders and pillion rider discovered not wearing the helmet, their vehicle number plate is processed using optical character recognition (OCR). Once the vehicle registration number is extracted, a challan will be produced against the individual vehicle and finally, the challan will be sent by means of e-mail and SMS to the registered owner of the vehicle.

No. of Pages : 7 No. of Claims : 4

(12) PATENT APPLICATION PUBLICATION
(21) Application No.202144028492 A
(19) INDIA
(22) Date of filing of Application :24/06/2021
(43) Publication Date : 02/07/2021

(54) Title of the invention : LINEAR DATA TRANSFER ARCHITECTURE OF INTEGRATED SYSTEMS IN MIDDLEWARE TECHNOLOGY

(51) International classification	:G06F0016250000, H04L0029080000, G06F0016270000, G06Q0010060000, G06F0009540000	(71)**Name of Applicant :** **1)S.RAVISANKAR** Address of Applicant :294, FOURTH CROSS STREET, PALANI ANDAVAR NAGAR, PALANI - 624601 DINDIGUL DISTRICT, TAMILNADU STATE, INDIA. Tamil Nadu India
(31) Priority Document No	:202141013173	(72)**Name of Inventor :** **1)S.RAVISANKAR**
(32) Priority Date	:25/03/2021	
(33) Name of priority country	:India	
(86) International Application No	:PCT//	
Filing Date	:01/01/1900	
(87) International Publication No	: NA	
(61) Patent of Addition to Application Number	:NA	
Filing Date	:NA	
(62) Divisional to Application Number	:NA	
Filing Date	:NA	

(57) Abstract :
ABSTRACT Linear data transfer architecture for integration of systems in middleware technology, is the title of the invention, is specified based on system client number specification. The invention belongs to the technical fields of computer science, distributed computing, and communication under science and technology. The invention relates to the technical problem of the data transfer for integration of systems in middleware technology. The solution to the technical problem through the invention is explained in the detailed description and illustrated with the accompanying drawings. Summary or feature of the invention This architecture is a conceptual model that defines the structure, behavior and functionality of linear data transfer for integration of system(s) in middleware technology. The principal use(s) of this invention are, 1. Science and Technology. 2. Distributed computing and Space research solutions. 3. Various Industry sectors. 4. Communication, Transfer, integration, interface and exchange processes. 5. Environmental solution. 6. Digital electronics and Digital business systems. 7. Implementation using the hardware, software and middleware. 8. Suitable for multiple systems environment. 9. Use in large and bulk data 10. Integration or interface or transfer or communication The reference numerals of drawings are 101, 102, 103, 201, 202, 203, 204, 205, 206, 207, 301, 302, 303 and 401, where source system(s) (101), internal source system(s) (102), external source system(s) (103), middleware system(s) (201), internal middleware system(s) (202), internal middleware system™s source client number (203), internal middleware system™s target client number (204), external middleware system(s) (205), external middleware system™s source client number (206), external middleware system™s target client number (207), and target system(s) (301), internal target system(s) (302), external target system(s) (303), data transfer (401).

No. of Pages : 26 No. of Claims : 7

(12) PATENT APPLICATION PUBLICATION
(21) Application No.1469/KOL/2010 A
(19) INDIA
(22) Date of filing of Application :30/12/2010
(43) Publication Date : 02/07/2021

(54) Title of the invention : ANTI MISSILE

(51) International classification	:A63F 03000
(31) Priority Document No	:NA
(32) Priority Date	:NA
(33) Name of priority country	:NA
(86) International Application No	:NA
Filing Date	:NA
(87) International Publication No	: NA
(61) Patent of Addition to Application Number	:NA
Filing Date	:NA
(62) Divisional to Application Number	:NA
Filing Date	:NA

(71)**Name of Applicant :**
1)NANDA PRAMOD KUMAR
Address of Applicant :GOVT. OF UNIVERSE, NANDA RESEARCH LABORATORY, UNIVERSAL WELFARE, DEFENCE & JUDICIAL DEPARTMENT, PO- BADAPARI, KHURDA, ORISSA, PIN-752023, INDIA Orissa India
(72)**Name of Inventor :**
1)NANDA PRAMOD KUMAR

(57) Abstract :
This antimissile or missile for non-violence or invisible missile - Kalki-89 is the missile which starts WAR (War Against Rascals or Rascals Supporters) despite of WAR (War Against Rastras or Countries) and destroyed the enemies and all defense missile of all charges and cutting and transportation mystery of the lightning observed in the year of 1982 of 31st May at Nanda Research Laboratory. It is also functioning under the principle of when carrier wave is not present and when carrier wave and cosmological medium are present. Where Vidr(0-finite) is the induced voltage developed by SVDM at the radial distance from 0 to finite from the source of SVDM. K is the proportionality constant depending upon the medium, surrounding temperature, presence of invisible electro magnetic waves emitted by different sources created from earth or space or GS Satellite System , emission of different cosmological charges from cosmological bodies during their different stages of formation etc. Vappds is the applied voltage at the source for SVDM either AC or DC supply. fcfs is the created frequency at the source by a SVDM or LED light source or by Oscillation circuit. Rfinite is the limiting or finite radial distance from the source of SVDM. Again it is experimented that when carrier wave or tower or Geo Stationary Sattelite is installed at regular interval then the same induced voltage Vidr(0-finite) is converted to Vidr(0-infinite) (i.e. the induced voltage is remaining the same at infinite distance) as it jumps one carrier wave to another carrier wave. It will balance the world economy, indirectly protect from Tsunami & Earthquake, any corruption, decreases the loss of biological diversity, protect universal human fundamental right, eradicating injustice as well as carbon emission from the world. Eventually, no doubt, it will bring prosperous and corruption fee universal democracy to the world.

No. of Pages : 12 No. of Claims : 10

(12) PATENT APPLICATION PUBLICATION
(21) Application No.202031024063 A
(19) INDIA
(22) Date of filing of Application :09/06/2020
(43) Publication Date : 02/07/2021

(54) Title of the invention : METHODS AND DISINFECTION EQUIPMENT FOR RESPIRATORS AND PERSONAL PROTECTIVE EQUIPMENT

(51) International classification	:A61L0002100000, A61L0002000000, C02F0001320000, A61L0002200000, A61L0002180000	(71)**Name of Applicant :** **1)Rajib Banerjee** Address of Applicant :A-43, Moulana Azad Sarani, City Centre, Durgapur, West Bengal, India. Pin Code - 713216 West Bengal India **2)Manash K. Paul**
(31) Priority Document No	:NA	
(32) Priority Date	:NA	(72)**Name of Inventor :**
(33) Name of priority country	:NA	**1)Rajib Banerjee**
(86) International Application No	:NA	**2)Manash K. Paul**
Filing Date	:NA	**3)Surajeet Das**
(87) International Publication No	: NA	**4)Pulakesh Roy**
(61) Patent of Addition to Application Number	:NA	
Filing Date	:NA	
(62) Divisional to Application Number	:NA	
Filing Date	:NA	

(57) Abstract :
The present invention relates to equipment and methods for sterilizing medical personal protection equipment, non-critical patient care items, other domestic and personal materials. The invention provides a method for optimisation of disinfection/ sterilisation as per the material of the article to be disinfected/sterilized. The disinfection/sterilisation method of the present invention provides efficient decontamination, reduced cycle time, and improved reuse ratio of the articles being disinfected/sterilized. The invention also provides for a piece of equipment with which the methods provided can be implemented. The equipment comprises multiple systems, including ultraviolet radiation and warm moist/dry heat treatment. These can be used as standalone systems or be used as hybrid systems. The invention provides an efficient, cheaper, scalable time-saving method and equipment for disinfection/ sterilisation.

No. of Pages : 22 No. of Claims : 9

(12) PATENT APPLICATION PUBLICATION
(21) Application No.202031027204 A
(19) INDIA
(22) Date of filing of Application :26/06/2020
(43) Publication Date : 02/07/2021

(54) Title of the invention : UV SANITIZER DEVICE

(51) International classification	:A61L0002180000, A01N0031020000, E05B0001000000, B01F0001000000, B65D0083380000	(71)**Name of Applicant :** **1)ADAMAS UNIVERSITY** Address of Applicant :An Indian Institute of BARASAT - BARRACKPORE ROAD, P.O. -JAGANNATHPUR, KOLKATA 700 126, WEST BENGAL, INDIA West Bengal India
(31) Priority Document No	:NA	(72)**Name of Inventor :**
(32) Priority Date	:NA	**1)MUKHERJEE, MOUMITA**
(33) Name of priority country	:NA	**2)GANGOPADHYAY, MOUMITA**
(86) International Application No	:NA	
Filing Date	:NA	
(87) International Publication No	: NA	
(61) Patent of Addition to Application Number	:NA	
Filing Date	:NA	
(62) Divisional to Application Number	:NA	
Filing Date	:NA	

(57) Abstract :
ABSTRACT UV SANITIZER DEVICE The present invention provides an Ultraviolet-C (UV-C) based multi-purpose sanitizer device comprising a body (A) provided with UV-C sources (12) on the top portion. The body has a sanitizing chamber (13) for accommodating at least an object (6) to be sanitized by operating the UV-sources from top. The sanitizing chamber is equipped with a load estimator (3) having a display means. The load estimator is operatively connected to a microcontroller (10) which is integrated to the body (A) of the sanitizer device, whereby the exact duration of UV-C exposure/dose needed for an object (6) to be sanitized can be deciphered, depending upon the weight of the object (6). FIG. 1

No. of Pages : 25 No. of Claims : 10

(12) PATENT APPLICATION PUBLICATION
(21) Application No.202031027688 A
(19) INDIA
(22) Date of filing of Application :30/06/2020
(43) Publication Date : 02/07/2021

(54) Title of the invention : A NOVEL PROBIOTIC TROCHE FOR ORAL HEALTH CARE USING L.REUTERI AND L.RHAMNOSUS WITH VITAMIN D

(51) International classification	:A61K0035747000, H04L0029060000, A23L0033135000, A61K0008670000, G06Q0050220000
(31) Priority Document No	:NA
(32) Priority Date	:NA
(33) Name of priority country	:NA
(86) International Application No	:NA
Filing Date	:NA
(87) International Publication No	: NA
(61) Patent of Addition to Application Number	:NA
Filing Date	:NA
(62) Divisional to Application Number	:NA
Filing Date	:NA

(71)**Name of Applicant :**
1)DR.SUMITA MISHRA
Address of Applicant :ASSOCIATE PROFESSOR, INSTITUTE OF DENTAL SCIENCES, SIKSHA O ANUSANDHAN (DEEMED TO BE UNIVERSITY), GHATIKIA, KALINGA NAGAR, BHUBANESWAR-751003 Orissa India
(72)**Name of Inventor :**
1)DR.SUMITA MISHRA

(57) Abstract :

No. of Pages : 0 No. of Claims : 0

(12) PATENT APPLICATION PUBLICATION
(21) Application No.202031051699 A
(19) INDIA
(22) Date of filing of Application :27/11/2020
(43) Publication Date : 02/07/2021

(54) Title of the invention : A CYNOSURE AIR IONIZATION DEVICE FOR AIR SANITIZATION AND A METHOD TO OPERATE THE SAME

(51) International classification	:A61L0009220000, H01T0023000000, F24F0003160000, B03C0003380000, B03C0003410000	(71)**Name of Applicant :** **1)SANTANU GHOSH** Address of Applicant :3, MAYFAIR ROAD, FLAT 1A, KOLKATA, 700019, WEST BENGAL, INDIA West Bengal India
(31) Priority Document No	:NA	(72)**Name of Inventor :** **1)SANTANU GHOSH**
(32) Priority Date	:NA	
(33) Name of priority country	:NA	
(86) International Application No	:NA	
Filing Date	:NA	
(87) International Publication No	: NA	
(61) Patent of Addition to Application Number	:NA	
Filing Date	:NA	
(62) Divisional to Application Number	:NA	
Filing Date	:NA	

(57) Abstract :
A cynosure air ionization device (100) is disclosed. An enclosed assembly (105) includes a first end (110) mounted on a fan inlet for enabling inflow of air from an indoor environment, an air flow conduit (115) having a cylindrical shape and includes an electrode to generate a plurality of bipolar charged ions, upon inflow of the air, using a bipolar ionization technique based on utilization of a positive and a negative half cycle of alternating current of power supplied by an electronic discharge circuit board. The power supplied is regulated by a frequency and voltage regulation unit coupled to the electrode (120), wherein the frequency and voltage regulation unit regulates frequency and voltage of the power supplied to a corresponding predefined range constantly, wherein the electrode produces ionized air. The enclosed assembly also includes a second end (130) which is adapted to receive the bipolar ionized air produced for discharging at the indoor environment for the air sanitization. FIG.1

No. of Pages : 23 No. of Claims : 8

(12) PATENT APPLICATION PUBLICATION
(21) Application No.202131026333 A
(19) INDIA
(22) Date of filing of Application :14/06/2021
(43) Publication Date : 02/07/2021

(54) Title of the invention : A SOLAR POWERED LIGHTING SYSTEM HAVING A RELAY BASED CIRCUIT

(51) International classification	:F21S0009030000, F21Y0115100000, H02J0007350000, H04W0088040000, H04B0007155000
(31) Priority Document No	:NA
(32) Priority Date	:NA
(33) Name of priority country	:NA
(86) International Application No	:NA
Filing Date	:NA
(87) International Publication No	: NA
(61) Patent of Addition to Application Number	:NA
Filing Date	:NA
(62) Divisional to Application Number	:NA
Filing Date	:NA

(71)**Name of Applicant :**
1)MR.SANTOSH SWAIN
Address of Applicant
:NUAGAN,TARAVA,DHENKANAL,ODISHA-759013,INDIA Orissa India
2)DR. SUDHANSU SEKHAR SAHOO
3)DR. MANOJ KUMAR NAYAK
4)DR.SUSANTA KUMAR ROUT
(72)**Name of Inventor :**
1)MR.SANTOSH SWAIN
2)DR. SUDHANSU SEKHAR SAHOO
3)DR. MANOJ KUMAR NAYAK
4)DR.SUSANTA KUMAR ROUT

(57) Abstract :
A solar powered lighting system having a relay based circuit Abstract This invention relates to a solar powered lighting system and in particular, this invention relates to the solar powered lighting system having a relay based circuit. More particularly, this present invention relates to the solar powered lighting system having a relay based circuit which will perform properly at low voltage cases including rainy seasons, cloudy weather, fog environment etc. Furthermore, this invention also relates to the solar powered lighting system which is safe, reliable and convenient for use, and can improve the existing daytime lighting and save a large quantity of energy sources, thus having better practical and popularization significance.

No. of Pages : 15 No. of Claims : 8

Publication After 18 Months:

The following Patent Applications have been published under Section 11A (3) of The Patents (Amendment) Act, 2005. Any Person may file representation by way of opposition to the Controller of Patents at the appropriate office against the grant of the patent in the prescribed manner under section 25(1) of the Patents (Amendment) Act, 2005 read with the rule 55 of The Patents (Amendment) Rules, 2006:

(12) PATENT APPLICATION PUBLICATION

(19) INDIA

(22) Date of filing of Application :25/12/2019

(21) Application No.201911053824 A

(43) Publication Date : 02/07/2021

(54) Title of the invention : ANTI-ACNE MICROEMULSIONS FOR TOPICAL ADMINISTRATION CO-LOADED WITH AZELAIC ACID AND TEA TREE ESSENTIAL OIL

(51) International classification	:A61K0009000000, A61K0047140000, A61K0036610000, A61Q0019000000, A61K0008020000	(71)**Name of Applicant :** **1)SHOOLINI UNIVERSITY OF BIOTECHNOLOGY AND MANAGEMENT SCIENCES** Address of Applicant :VILLAGE- BHAJOL, P.O. SULTANPUR, SOLAN- 173229 (H.P) Himachal Pradesh India
(31) Priority Document No	:NA	(72)**Name of Inventor :**
(32) Priority Date	:NA	**1)ALPANA BISHT**
(33) Name of priority country	:NA	**2)PRAKRITI NIDHI**
(86) International Application No	:NA	**3)RAJAN ROLTA**
Filing Date	:NA	**4)PROF. KAMAL DEV**
(87) International Publication No	: NA	**5)PROF. ANURADHA SOURIRAJAN**
(61) Patent of Addition to Application Number	:NA	**6)Dr. POONAM NEGI**
Filing Date	:NA	
(62) Divisional to Application Number	:NA	
Filing Date	:NA	

(57) Abstract :
Present invention relates to microemulsions and microemulsion hydrogel composition, comprising a therapeutically effective amount of Azelaic acid and Tea tree essential oil for use in the treatment of acne vulgaris. AzA and TTO microemulsions are developed for the topical delivery of acne vulgaris. Microemulsions (ME) was prepared employing construction of pseudo-ternary phase diagrams. All the ME were characterised for droplet size, size distribution and zeta potential. The ME hydrogel was found to be optimum with respect to rheological and textural attributes. The skin permeation and retention of AzA was significantly higher vis- -vis marketed formulation. The antibacterial efficacy of ME and ME hydrogel was also superior in comparison to plain drug. Thus, the developed ME system could be promising drug delivery systems for the topical therapy of Acne vulgaris.

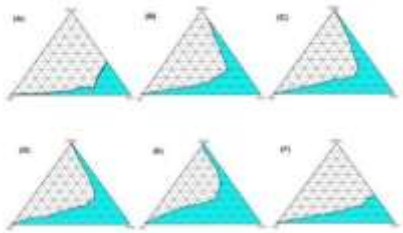

No. of Pages : 30 No. of Claims : 5

(12) PATENT APPLICATION PUBLICATION
(19) INDIA
(22) Date of filing of Application :25/12/2019

(21) Application No.201911053826 A
(43) Publication Date : 02/07/2021

(54) Title of the invention : A METHOD FOR EVALUATION OF ANTI-HYPERTENSIVE ACTIVITY OF HIBISCITRIN TARGETING ANGIOTENSIN CONVERTING ENZYME

(51) International classification	:A61K0038550000, A61K0036250000, C07K0014415000, G01N0024080000, A61K0031403000	(71)**Name of Applicant :** **1)SHOOLINI UNIVERSITY OF BIOTECHNOLOGY AND MANAGEMENT SCIENCES** Address of Applicant :VILLAGE- BHAJOL, P.O. SULTANPUR, SOLAN- 173229 (H.P) Himachal Pradesh India
(31) Priority Document No	:NA	(72)**Name of Inventor :**
(32) Priority Date	:NA	**1)AZHAR KHAN**
(33) Name of priority country	:NA	**2)HUMA KHAN**
(86) International Application No	:NA	**3)Dr. MD. ZUBBAIR MALIK**
Filing Date	:NA	**4)MONIKA KATARIA**
(87) International Publication No	: NA	**5)Dr. AZIZ UR RAHMAN**
(61) Patent of Addition to Application Number	:NA	
Filing Date	:NA	
(62) Divisional to Application Number	:NA	
Filing Date	:NA	

(57) Abstract :
This invention relates to screening fraction oi Hibiscus sabdariffa inhibiting the conversion of Ang I to Ang II by blocking the action of angiotensin converting enzyme. Hibiscus sabdariffa leaves fraction was tested for their ability to inhibit angiotensin-converting enzyme (ACE), an important component of the Renin-Angiotensin System which is a critical regulator of arterial blood pressure. The ACE inhibitory activity of each fraction was measured by employing a colorimetric assay based on the hydrolysis of histidyl-hippuryl-leucine (HHL) by ACE. The results of ACE inhibitory revealed that the n- butanol, ethyl acetate and chloroform fraction exhibited the antihypertensive activity with a percent inhibition of 28.67%, 47.17% and 68.97%). The chloroform fraction was shows maximum inhibition for ACE in comparison to other fractions. Thus chloroform fraction was further characterized by LCMS and NMR and after the analysis of LCMS and NMR we found the Hibiscitrin compound. The fraction was further use for antioxidant assay i.e Superoxide (O2) radical scavenging activity (SOD) and nitric oxide assay (NO). The result of the Hibiscus sabdariffa chloroform fraction shows IC50 value was 320.6897 in NO and 310.8527 bark in SOD. Ascorbic acid was use as a positive control in SOD and NO which shows IC50 was 243.3071 and 302.22 respectively.

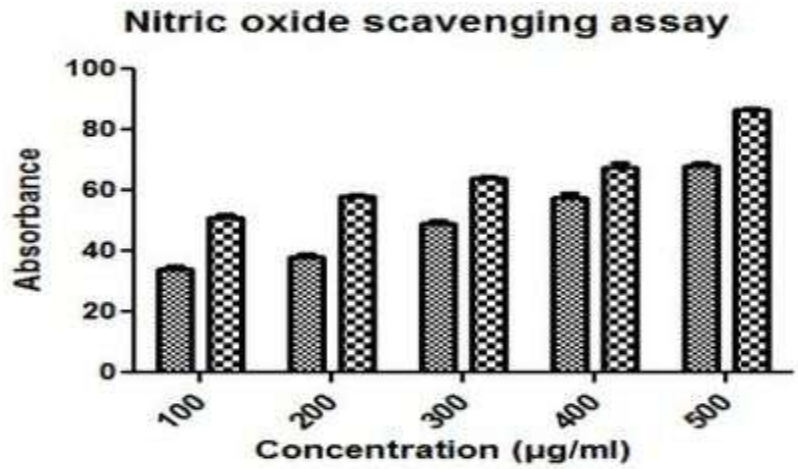

No. of Pages : 27 No. of Claims : 6

(12) PATENT APPLICATION PUBLICATION
(21) Application No.201911053880 A
(19) INDIA
(22) Date of filing of Application :26/12/2019
(43) Publication Date : 02/07/2021

(54) Title of the invention : BREATHER SYSTEM FOR AN AUTOMOBILE ENGINE

(51) International classification	:F01M0013040000, F16H0003000000, G02B0005122000, F02D0041240000, A61B0050000000	(71)**Name of Applicant :** **1)MARUTI SUZUKI INDIA LIMITED** Address of Applicant :1 Nelson Mandela Road, Vasant Kunj, New Delhi-110070, India Delhi India
(31) Priority Document No	:NA	(72)**Name of Inventor :**
(32) Priority Date	:NA	**1)Vineet Gupta**
(33) Name of priority country	:NA	**2)Ankur Jha**
(86) International Application No	:NA	**3)Robin Yadav**
Filing Date	:NA	
(87) International Publication No	: NA	
(61) Patent of Addition to Application Number	:NA	
Filing Date	:NA	
(62) Divisional to Application Number	:NA	
Filing Date	:NA	

(57) Abstract :
The present invention relates to a breather system. In the present invention, a breather system (100) for an automobile engine is disclosed. The breather system (100) comprises a plurality of stoppers (104) rigidly fixed at bottom surface of a breathing chamber (110) and positioned centrally inside the breathing chamber (110), each of the plurality of stoppers (104) includes three plates (401, 402, 403) coupled together at one end at an intersection point (400), wherein two of the three plates being positioned at a predefined angle and a third plate (403) being positioned such that the third plate (403) bisects the predefined angle; and a plurality of hinged baffles (103) positioned adjacent to the stoppers (104), each of the plurality of hinged baffles (104) having a pair of plates (301, 302), each of which is hinged at the intersection point of the three plates (400) of the stoppers (104).

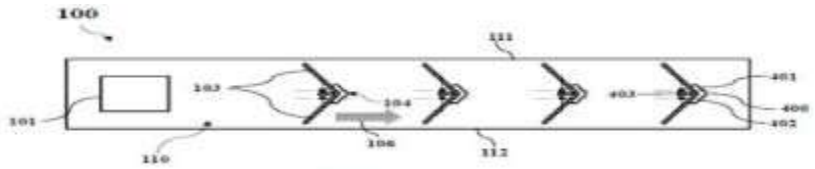

Fig. 1A

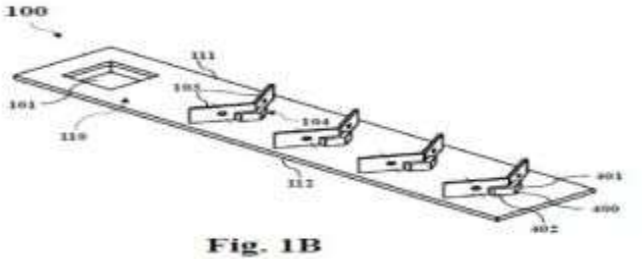

Fig. 1B

No. of Pages : 14 No. of Claims : 3

(12) PATENT APPLICATION PUBLICATION
(19) INDIA
(22) Date of filing of Application :26/12/2019

(21) Application No.201911053885 A
(43) Publication Date : 02/07/2021

(54) Title of the invention : CHITOSAN-ONION SHELL COMPOSITE AND PREPARATION THEREOF

(51) International classification	:A61K0009480000, C08K0003080000, C08K0003360000, D06M0023080000, A61Q0011000000	(71)**Name of Applicant :** **1)Indian Institute of Technology Delhi** Address of Applicant :Hauz Khas, New Delhi-110016, India. Delhi India
(31) Priority Document No	:NA	(72)**Name of Inventor :**
(32) Priority Date	:NA	**1)BUTOLA, B S**
(33) Name of priority country	:NA	**2)ISLAM, Shahid Ul**
(86) International Application No	:NA	**3)SRIVASTAVA, Mayuri**
Filing Date	:NA	
(87) International Publication No	: NA	
(61) Patent of Addition to Application Number	:NA	
Filing Date	:NA	
(62) Divisional to Application Number	:NA	
Filing Date	:NA	

(57) Abstract :
The present invention relates to a chitosan composite having antibacterial and anti-oxidant property, useful for functionalising textiles. In particular, the present invention relates to a chitosan composite formulation comprising onion shell and chitosan complex. The present invention further relates to preparation of said composite formulation using precipitation method.

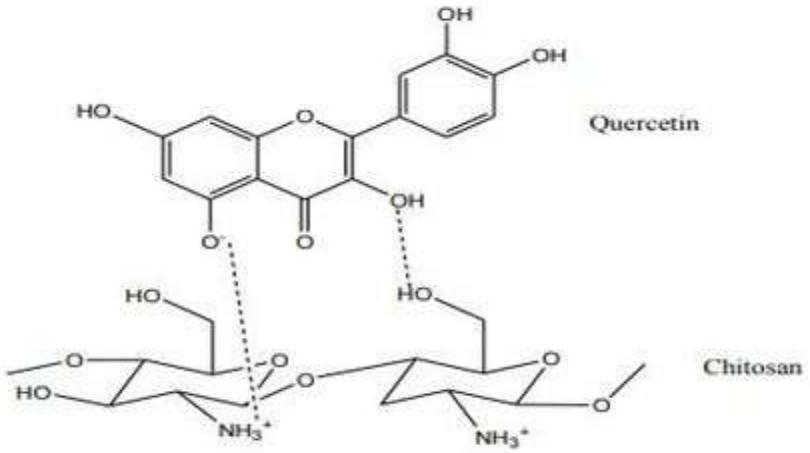

No. of Pages : 25 No. of Claims : 16

(12) PATENT APPLICATION PUBLICATION
(19) INDIA
(22) Date of filing of Application :26/12/2019

(21) Application No.201911053889 A
(43) Publication Date : 02/07/2021

(54) Title of the invention : CALCULATING A RETURN PERIOD WIND SPEED

(51) International classification	:B64G0001360000, H04N0021274300, G09B0005140000, G10L0021100000, G05B0019042000	(71)**Name of Applicant :** **1)Vestas Wind Systems A/S** Address of Applicant :Hedeager 42, 8200 Aarhus N, Denmark Denmark (72)**Name of Inventor :** **1)Sayantan Chattopadhyay**
(31) Priority Document No	:NA	
(32) Priority Date	:NA	
(33) Name of priority country	:NA	
(86) International Application No	:NA	
Filing Date	:NA	
(87) International Publication No	: NA	
(61) Patent of Addition to Application Number	:NA	
Filing Date	:NA	
(62) Divisional to Application Number	:NA	
Filing Date	:NA	

(57) Abstract :
A method of calculating a return period wind speed for a proposed wind turbine site is provided. Wind speed measurements and modelled wind speeds associated with the proposed site are provided. The measured and modelled wind speeds are transformed into the frequency domain, and combined to generate a hybrid spectrum. The hybrid spectrum is transformed into the time domain to generate a set of hybrid wind speed measurements, which are used to calculate the return period wind speed.

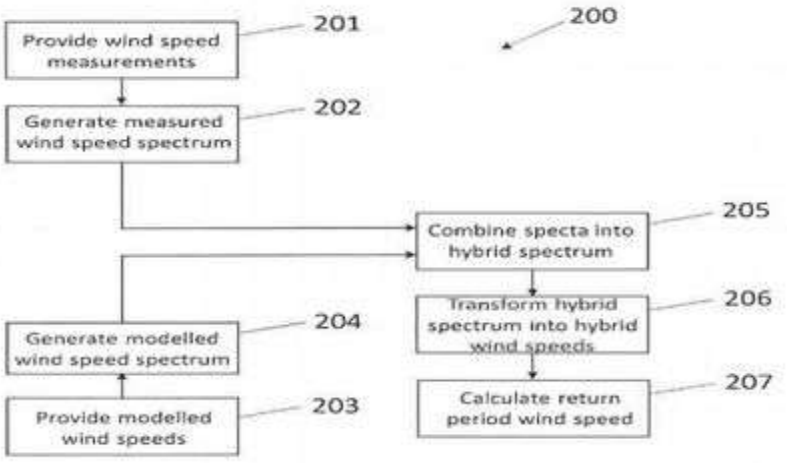

No. of Pages : 21 No. of Claims : 17

(12) PATENT APPLICATION PUBLICATION
(21) Application No.201911053938 A
(19) INDIA
(22) Date of filing of Application :26/12/2019
(43) Publication Date : 02/07/2021

(54) Title of the invention : EVAPORATED FUEL COLLECTING DEVICE FOR A STRADDLE-TYPE VEHICLE

(51) International classification	:F02M0025080000, B62K0011040000, B62J0015000000, B62K0005010000, B62K0025280000	(71)**Name of Applicant :** **1)Hero MotoCorp Limited** Address of Applicant :The Grand Plaza, Plot No.2, Nelson Mandela Road, Vasant Kunj- Phase -II, New Delhi Delhi India (72)**Name of Inventor :** **1)KUMAR, Vinod**
(31) Priority Document No	:NA	
(32) Priority Date	:NA	
(33) Name of priority country	:NA	
(86) International Application No	:NA	
Filing Date	:NA	
(87) International Publication No	: NA	
(61) Patent of Addition to Application Number	:NA	
Filing Date	:NA	
(62) Divisional to Application Number	:NA	
Filing Date	:NA	

(57) Abstract :
A straddle-type vehicle (100) is provided. The straddle-type vehicle (100) comprises a body frame (200) having a main frame (202), a left seat rail (204a), and a right seat rail (204b). The main frame (202), the left seat rail (204a) and the right seat rail (204b) defines a connecting junction (J). The straddle-type vehicle (100) also comprises a swing arm (121), at least one suspension device (118), a battery box (514) and an evaporated fuel collecting device (212) mounted to the battery box (514). At least portion of the connecting junction (J) over laps with the evaporated fuel collecting device (212) in top view of the straddle-type vehicle (100). Further, the evaporated fuel collecting device (212) extends substantially parallel to the at least one suspension device (118) in side view of the straddle type vehicle (100).

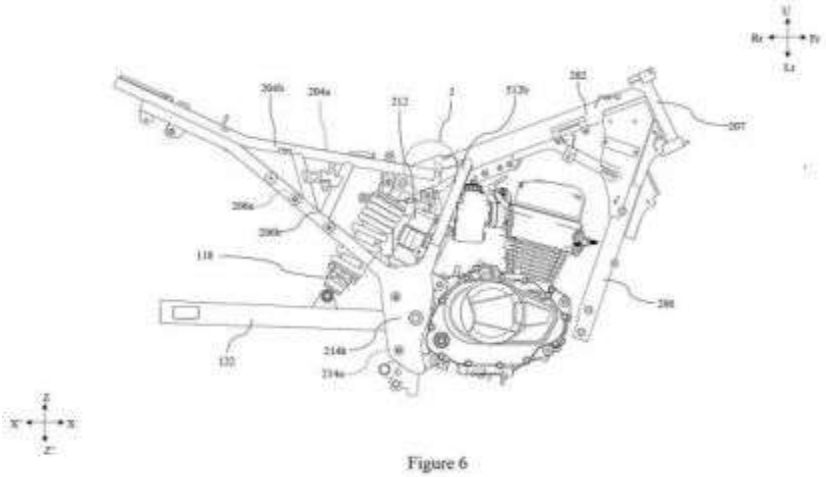

Figure 6

No. of Pages : 28 No. of Claims : 10

(12) PATENT APPLICATION PUBLICATION
(21) Application No.201911053963 A
(19) INDIA
(22) Date of filing of Application :26/12/2019
(43) Publication Date : 02/07/2021

(54) Title of the invention : A SYSTEM FOR ISOLATING LOAD FROM CRANKSHAFT OF A VEHICLE

(51) International classification	:F02B0039120000, B60H0001320000, F02B0039040000, F04D0013060000, B60K0017020000	(71)**Name of Applicant :** **1)MARUTI SUZUKI INDIA LIMITED** Address of Applicant :1 NELSON MANDELA ROAD, VASANT KUNJ, NEW DELHI-110070, INDIA. Delhi India
(31) Priority Document No	:NA	(72)**Name of Inventor :**
(32) Priority Date	:NA	**1)SAMARTH GHADGE**
(33) Name of priority country	:NA	**2)AJAY KUMAR VASHISTH**
(86) International Application No	:NA	**3)DEEPAK GARG**
Filing Date	:NA	**4)RANJEET RAJAK**
(87) International Publication No	: NA	**5)DEEPTI MAHRA**
(61) Patent of Addition to Application Number	:NA	**6)NITIN KUMAR**
Filing Date	:NA	
(62) Divisional to Application Number	:NA	
Filing Date	:NA	

(57) Abstract :
The present disclosure relates to a system 100 for isolating load from crankshaft of a vehicle. The system 100 includes a spacer 101 having its first end rotatably engaged with the crankshaft of the vehicle, an isolator assembly 102 mounted on extended oil pump assembly 201 to accommodate auxiliary and ancillary loads, a magnetic clutch assembly 103 to engage the isolator assembly 102 with the crankshaft of the vehicle after achieving stable RPM, and an electronic control unit to engage or disengage the magnetic clutch assembly 103 from the isolator assembly 102, wherein during initial priming the electronic control unit disengage the magnetic clutch assembly 103 from the isolator assembly 102 to reduce the load from the crankshaft and again engage the magnetic clutch assembly 103 with the isolator assembly 102 when stable RPM is achieved. Due to less load on the crankshaft, CNG is able to generate the torque required to acquire stable RPM even during cold start in all operating condition. Further, start fuel quantity for initial priming is reduced considerably which not only saves the fuel, but also reduces high CO2 and hydrocarbon emission.

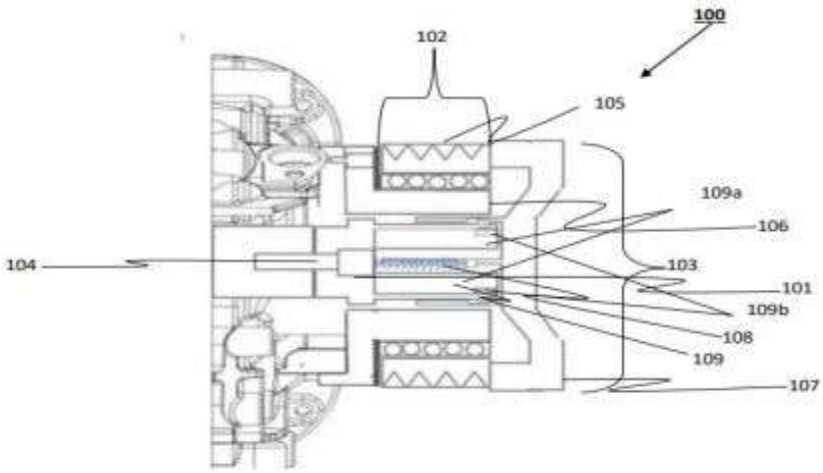

No. of Pages : 22 No. of Claims : 9

(12) PATENT APPLICATION PUBLICATION
(19) INDIA
(22) Date of filing of Application :26/12/2019

(21) Application No.201911053965 A
(43) Publication Date : 02/07/2021

(54) Title of the invention : METHOD AND DEVICE FOR DATA STORAGE IN AN EXTERNAL DEVICE

(51) International classification	:G06F0013380000, C23C0014240000, G06F0016245300, F16F0009512000, G06F0012084600	
(31) Priority Document No	:NA	
(32) Priority Date	:NA	
(33) Name of priority country	:NA	
(86) International Application No	:NA	
Filing Date	:NA	
(87) International Publication No	: NA	
(61) Patent of Addition to Application Number	:NA	
Filing Date	:NA	
(62) Divisional to Application Number	:NA	
Filing Date	:NA	

(71)**Name of Applicant :**
1)National Institute of Technology, Kurukshetra
Address of Applicant :National Institute of Technology Kurukshetra, Kurukshetra-136119, Haryana, India Haryana India
(72)**Name of Inventor :**
1)CHHABRA, Jitender Kumar
2)JOSHI, Apoorv
3)GHILDIYAL, Gaurav Kumar
4)KEDIA, Mayank

(57) Abstract :
The present invention discloses a method and device for securely storing data on inner partition space of an external device 122, communicatively coupled with the host device. The method includes creating plurality of partitions and inner partition space on the external device 122 by the host device 100. The plurality of partitions is based on a size of at least one file to be stored on the external device 122. The method includes transforming data in the at least one file from a readable form into an unreadable form. The method includes splitting the transformed data into a plurality of data-groups, each of the plurality of data-groups having a pre-defined size. The method further includes storing the plurality of data-groups at the inner partition space between the plurality of partitions on the external device 122 in a pre-defined sequence.

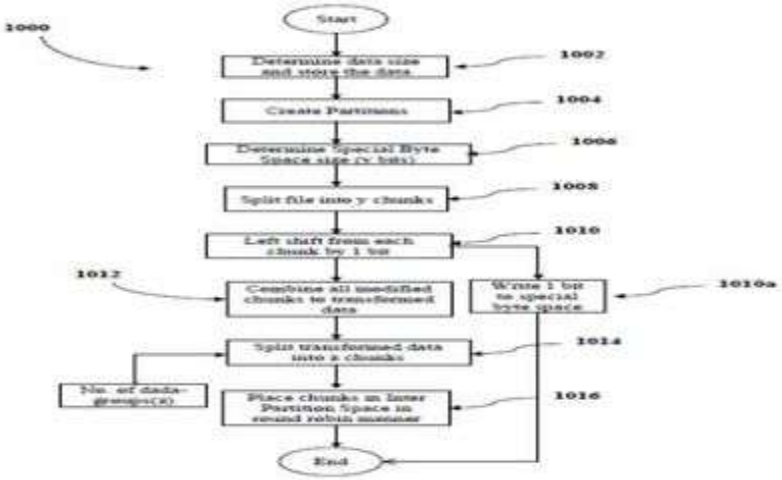

No. of Pages : 30 No. of Claims : 18

(12) PATENT APPLICATION PUBLICATION
(19) INDIA
(22) Date of filing of Application :26/12/2019

(21) Application No.201911053966 A
(43) Publication Date : 02/07/2021

(54) Title of the invention : SECURE STORAGE DEVICE AND METHOD OF SECURE TRANSFERRING OF DATA

(51) International classification	:G06F0003060000, G06F0012080400, H04L0029060000, G06F0021720000, G06F0021780000	
(31) Priority Document No	:NA	
(32) Priority Date	:NA	
(33) Name of priority country	:NA	
(86) International Application No	:NA	
Filing Date	:NA	
(87) International Publication No	: NA	
(61) Patent of Addition to Application Number	:NA	
Filing Date	:NA	
(62) Divisional to Application Number	:NA	
Filing Date	:NA	

(71)**Name of Applicant :**
1)Chairman, Defence Research And Development Organisation (DRDO)
Address of Applicant :Ministry Of Defence, Govt. of India, Room No. 348, B- Wing, DRDO Bhawan, Rajaji Marg, New Delhi-110011, India Delhi India
(72)**Name of Inventor :**
1)THAMAN, Rajeev
2)VERMA, Vinay
3)GARAI, Mainak

(57) Abstract :
The present disclosure describes secure storage device and method of secure transferring of data. In accordance with the embodiments, the secure storage device includes a communication interface to communicatively couple with a host device in a network environment comprising of plurality of networks. The secure storage device includes a first memory and a second memory. The first memory is to store control information corresponding to a set of networks from the plurality of networks. The second memory is to store data. The secure storage device includes an interface controller operatively coupled to the communication interface, the first memory, and the second memory. The interface controller is to selectively transfer the data between the second memory and the host device in the network environment based on the control information. The secure storage device includes a secure controller operatively coupled to the second memory. The secure controller is to encrypt and store the data in the second memory based on the control information.

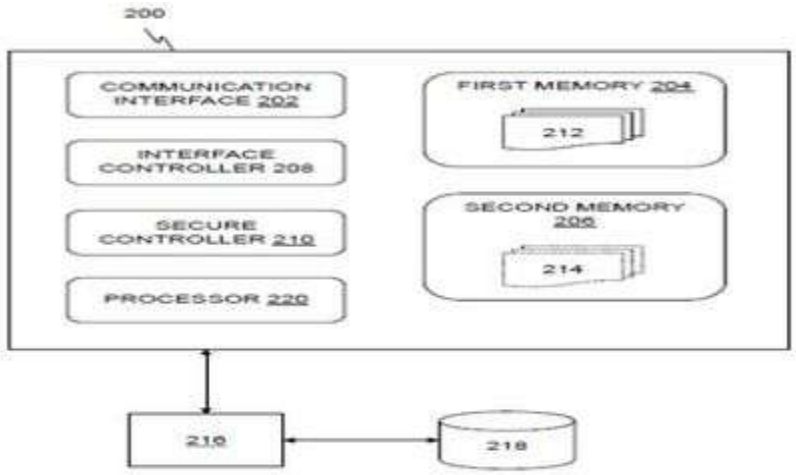

No. of Pages : 30 No. of Claims : 17

(12) PATENT APPLICATION PUBLICATION
(19) INDIA
(22) Date of filing of Application :26/12/2019

(21) Application No.201911053967 A
(43) Publication Date : 02/07/2021

(54) Title of the invention : AN ARRANGEMENT TO REGULATE WATER FLOW IN A WASHING MACHINE

(51) International classification	:G05D0023130000, D06F0039000000, D06F0039120000, D06F0039080000, F16K0011220000	(71)**Name of Applicant :** **1)LG ELECTRONICS INC.** Address of Applicant :20 Yeouido-dong, Yeongdeungpo-gu, Seoul 150-721, Republic of Korea Republic of Korea (72)**Name of Inventor :** **1)Verma Rituraj**
(31) Priority Document No	:NA	
(32) Priority Date	:NA	
(33) Name of priority country	:NA	
(86) International Application No	:NA	
Filing Date	:NA	
(87) International Publication No	: NA	
(61) Patent of Addition to Application Number	:NA	
Filing Date	:NA	
(62) Divisional to Application Number	:NA	
Filing Date	:NA	

(57) Abstract :
An arrangement (100) to regulate water flow in a washing machine is provided. The arrangement (100) comprises of a first valve (102), a second valve (104) and a sensor (106) . The first valve (102) and the second valve (104) are configured to control the flow of water in the washing machine from a source. Upon detecting a pre-defined pressure limit of the water flow and the level of water in the washing machine, the sensor (106) is configured to close and open the first valve (102) and the second valve (104) to regulate flow of water into the washing machine.

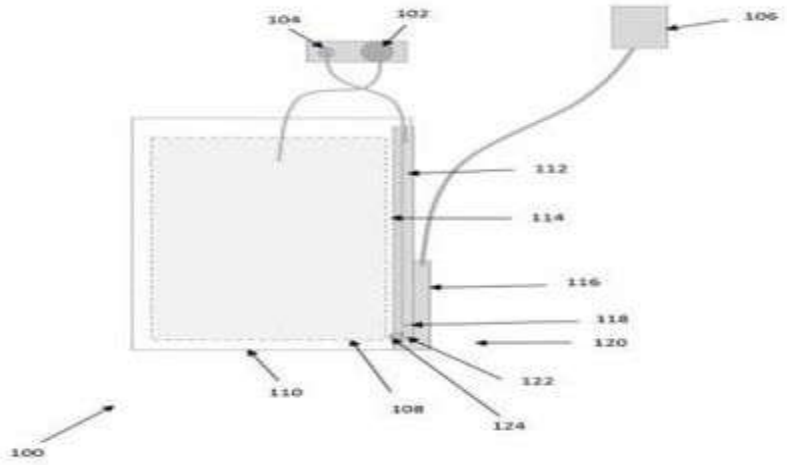

No. of Pages : 16 No. of Claims : 19

(12) PATENT APPLICATION PUBLICATION
(21) Application No.201911053968 A
(19) INDIA
(22) Date of filing of Application :26/12/2019
(43) Publication Date : 02/07/2021

(54) Title of the invention : AN ARRANGEMENT FOR REDUCING UNDESIRABLE VIBRATIONS IN A WASHING MACHINE

(51) International classification	:D06F0037240000, D06F0037260000, D06F0037200000, D06F0037220000, D06F0037000000	(71)**Name of Applicant :** **1)LG ELECTRONICS INC.** Address of Applicant :20 Yeouido-dong, Yeongdeungpo-gu, Seoul 150-721, Republic of Korea Republic of Korea
(31) Priority Document No	:NA	(72)**Name of Inventor :** **1)Magar Gopal** **2)Singh Devender**
(32) Priority Date	:NA	
(33) Name of priority country	:NA	
(86) International Application No	:NA	
Filing Date	:NA	
(87) International Publication No	: NA	
(61) Patent of Addition to Application Number	:NA	
Filing Date	:NA	
(62) Divisional to Application Number	:NA	
Filing Date	:NA	

(57) Abstract :
An arrangement (200) for reducing undesirable abnormal high vibrations in a washing machine (10 0) is provided. The arrangement (200) comprises a cabinet (102) , an outer drum (104) , an inner drum (106) and at least a suspension assembly (108) . The outer drum (104) is provided inside the cabinet (102) of the washing machine (100). The inner drum (106) is provided within the outer drum (104) of the washing machine (100) . Each suspension assembly (10 8) is operably coupled to a portion of the cabinet (102) and a portion of the outer drum (104) such that the outer drum (104) is suspended from the cabinet (102) respectively. Further, each suspension assembly (108) is provided with a spring (206) which is moveably mounted on a suspension rod (208) to hold the outer drum (104).

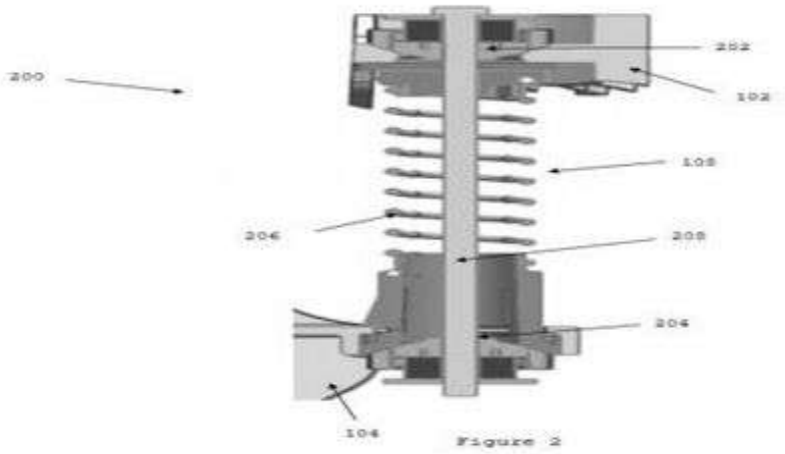

Figure 2

No. of Pages : 15 No. of Claims : 12

(12) PATENT APPLICATION PUBLICATION
(21) Application No.201911053969 A
(19) INDIA
(22) Date of filing of Application :26/12/2019
(43) Publication Date : 02/07/2021

(54) Title of the invention : AN ARRANGEMENT FOR SECURING BLADES OF A CEILING FAN

(51) International classification	:F04D0025080000, H01C0001140000, F04D0029380000, F04D0029340000, H01M0004600000	(71)**Name of Applicant :** **1)LG ELECTRONICS INC.** Address of Applicant :20 Yeouido-dong, Yeongdeungpo-gu, Seoul 150-721, Republic of Korea Republic of Korea
(31) Priority Document No	:NA	(72)**Name of Inventor :** **1)Anand**
(32) Priority Date	:NA	
(33) Name of priority country	:NA	
(86) International Application No	:NA	
Filing Date	:NA	
(87) International Publication No	: NA	
(61) Patent of Addition to Application Number	:NA	
Filing Date	:NA	
(62) Divisional to Application Number	:NA	
Filing Date	:NA	

(57) Abstract :
An arrangement (100) for securing blades (102) of a ceiling fan from dust particles is provided. The arrangement (100) comprises a plurality of blades (102), a plurality of conductive polymer electrodes (106) and electric power unit (204) . The plurality of blades (102) are horizontally attached with a rotating part of a motor. The plurality of conductive polymer electrodes (106) are provided at each blade (102) of the ceiling fan. The plurality of conductive polymer electrodes (106) are provided in a form of strips at the surface of the blades (102) of the ceiling fan. The strips of the plurality of conductive polymer electrodes (106) are provided inside the hollow (104) portion of the plurality of blades (102) of the ceiling fan.

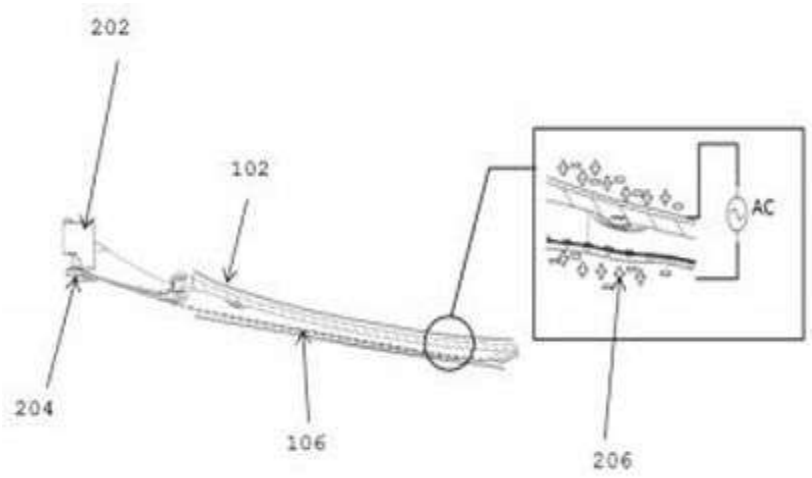

No. of Pages : 13 No. of Claims : 9

(12) PATENT APPLICATION PUBLICATION
(19) INDIA
(22) Date of filing of Application :26/12/2019

(21) Application No.201911053970 A
(43) Publication Date : 02/07/2021

(54) Title of the invention : AN ARRANGEMENT FOR CLEANING AN APPAREL IN A WASHING MACHINE

(51) International classification	:D06F0037020000, D06F0037240000, D06F0037260000, D06F0037220000, D06F0037120000	(71)**Name of Applicant :** **1)LG ELECTRONICS INC.** Address of Applicant :20 Yeouido-dong, Yeongdeungpo-gu, Seoul 150-721, Republic of Korea Republic of Korea
(31) Priority Document No	:NA	(72)**Name of Inventor :** **1)Bhatt Navneet Mohan**
(32) Priority Date	:NA	
(33) Name of priority country	:NA	
(86) International Application No	:NA	
Filing Date	:NA	
(87) International Publication No	: NA	
(61) Patent of Addition to Application Number	:NA	
Filing Date	:NA	
(62) Divisional to Application Number	:NA	
Filing Date	:NA	

(57) Abstract :
An arrangement (100) for cleaning apparel (118) in a washing machine is provided. The arrangement (100) comprises a outer drum (104) , an inner drum (106) , a plurality of conducting metallic balls and a plurality of electromagnets (110, 112, 114, 116) . The outer drum (104) is provided inside the washing machine. The inner drum (106) is provided within the outer drum (104) of the washing machine. The plurality of conducting metallic balls are provided for clipping with stained apparels (118) for cleaning. The plurality of electromagnets (110, 112, 114, 116) are provided inside the inner drum (106) of the washing machine to creates a magnetic field inside the inner drum (106). The plurality of conducting metallic balls with the apparels (118) move inside the inner drum (106) by the influence of the magnetic field of the plurality of electromagnets (110, 112, 114, 116).

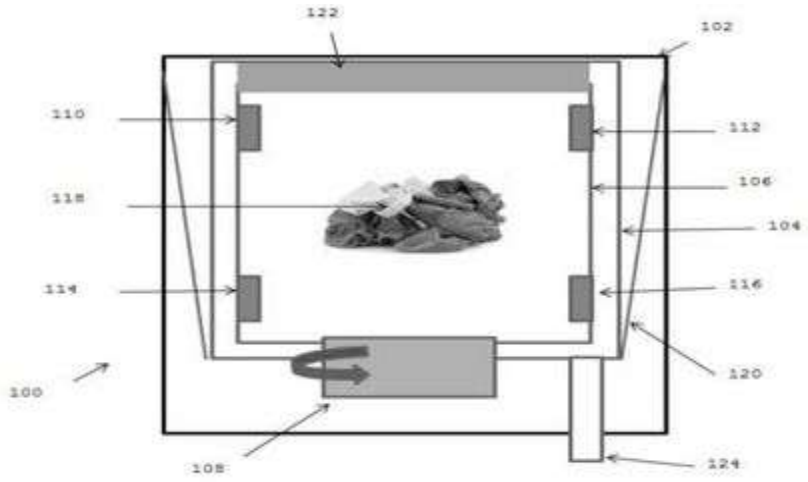

No. of Pages : 17 No. of Claims : 24

(12) PATENT APPLICATION PUBLICATION
(19) INDIA
(22) Date of filing of Application :26/12/2019

(21) Application No.201911053976 A
(43) Publication Date : 02/07/2021

(54) Title of the invention : METHODS FOR IMPROVING BARRIER INTEGRITY OF GINGIVAL TISSUE

(51) International classification	:A61Q0011000000, A61K0031120000, A61K0008250000, A61K0009000000, A61K0008040000	(71)**Name of Applicant :** **1)Colgate-Palmolive Company** Address of Applicant :300 Park Avenue New York, New York 10022, U.S.A U.S.A. **2)The University of North Carolina at Chapel Hill**
(31) Priority Document No	:NA	(72)**Name of Inventor :**
(32) Priority Date	:NA	**1)ARORA, Payal**
(33) Name of priority country	:NA	**2)TRIVEDI, Harsh Mahendra**
(86) International Application No	:NA	**3)HAO, Zhigang**
Filing Date	:NA	**4)THOMSON, Paul**
(87) International Publication No	: NA	**5)MANDHARE, Manish**
(61) Patent of Addition to Application Number	:NA	**6)WANG, Yu**
Filing Date	:NA	**7)CHENG, Chi-Yuan**
		8)PAN, Long
(62) Divisional to Application Number	:NA	**9)BARROS, Silvana**
Filing Date	:NA	

(57) Abstract :
Described herein are methods for improving or maintaining the barrier integrity of gingival tissue comprising administering an oral care composition comprising a curcuminoid, to the oral cavity of a subject in need thereof.

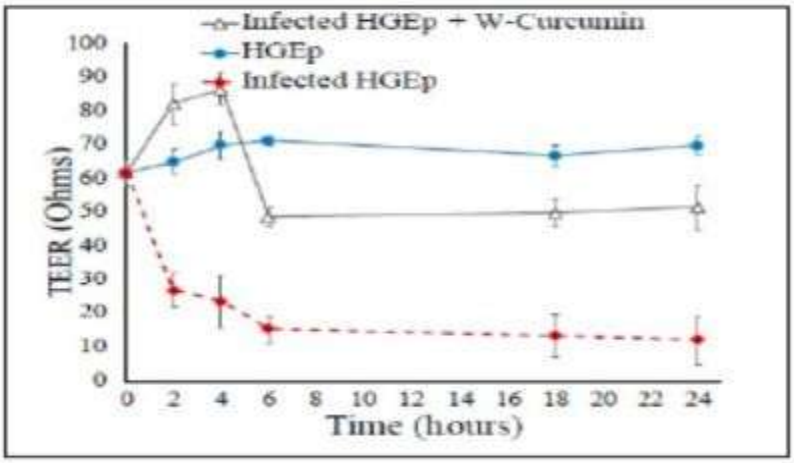

No. of Pages : 28 No. of Claims : 20

(12) PATENT APPLICATION PUBLICATION
(19) INDIA
(22) Date of filing of Application :26/12/2019

(21) Application No.201911053977 A
(43) Publication Date : 02/07/2021

(54) Title of the invention : ORAL CARE COMPOSITIONS

(51) International classification	:A61K0031120000, A61K0008210000, A61K0008240000, B01J0035100000, A61K0036906600	(71)**Name of Applicant :** **1)Colgate-Palmolive Company** Address of Applicant :300 Park Avenue, New York, New York 10022, U.S.A. U.S.A.
(31) Priority Document No	:NA	(72)**Name of Inventor :**
(32) Priority Date	:NA	**1)ARORA, Payal**
(33) Name of priority country	:NA	**2)TRIVEDI, Harsh Mahendra**
(86) International Application No	:NA	**3)HAO, Zhigang**
Filing Date	:NA	**4)THOMSON, Paul**
(87) International Publication No	: NA	**5)MANDHARE, Manish**
(61) Patent of Addition to Application Number	:NA	**6)WANG, Yu**
Filing Date	:NA	**7)CHENG, Chi-Yuan**
(62) Divisional to Application Number	:NA	**8)PAN, Long**
Filing Date	:NA	

(57) Abstract :
Described herein are - inter alia - complexes comprising a curcuminoid; and an anionic surfactant. Methods of making and using same are also described.

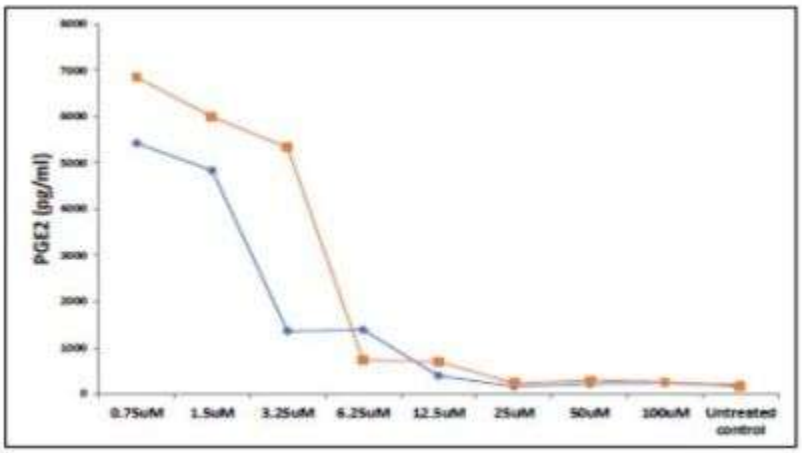

No. of Pages : 34 No. of Claims : 48

(12) PATENT APPLICATION PUBLICATION
(19) INDIA
(22) Date of filing of Application :26/12/2019

(21) Application No.201911054004 A
(43) Publication Date : 02/07/2021

(54) Title of the invention : WIPER ASSEMBLY WITH ELECTROMAGNETS

(51) International classification	:B60S0001340000, B60S0001400000, G01S0015890000, F01L0009040000, B60S0001240000	(71)**Name of Applicant :** **1)MARUTI SUZUKI INDIA LIMITED** Address of Applicant :1 Nelson Mandela Road, Vasant Kunj, New Delhi-110070, India Delhi India
(31) Priority Document No	:NA	(72)**Name of Inventor :**
(32) Priority Date	:NA	**1)PRATEEK SHAH**
(33) Name of priority country	:NA	**2)BHUVNESHWAR YADAV**
(86) International Application No	:NA	**3)ZUBER AHMAD**
Filing Date	:NA	**4)KAMAL KUMAR AGARWAL**
(87) International Publication No	: NA	**5)ROHIT DANG**
(61) Patent of Addition to Application Number	:NA	**6)SANDEEP RAINA**
Filing Date	:NA	
(62) Divisional to Application Number	:NA	
Filing Date	:NA	

(57) Abstract :
Described herein is a wiper assembly (200) comprises a wiper arm (202) pivotally connected with a wiper arm head (201) at one end and a wiper blade provided at other end and a pivot shaft (204) where one end is rotatably coupled with wiper arm head (202) and other end is connected to a lever (205). The wiper assembly (200) further comprise a wiper arm position, velocity and acceleration sensor (403) is coupled with the pivot shaft (207) and a housing (206) having a pair of electromagnets (206b, 206c); and a third electromagnet (205c) provided at other end of the lever (205), the third electromagnet (205c) is movable coupled in the housing (206) in between the first fixed electromagnet (206b) and the second fixed electromagnet (206c) to move the wiper arm head (201) coupled with the lever (205) via pivot shaft (204).

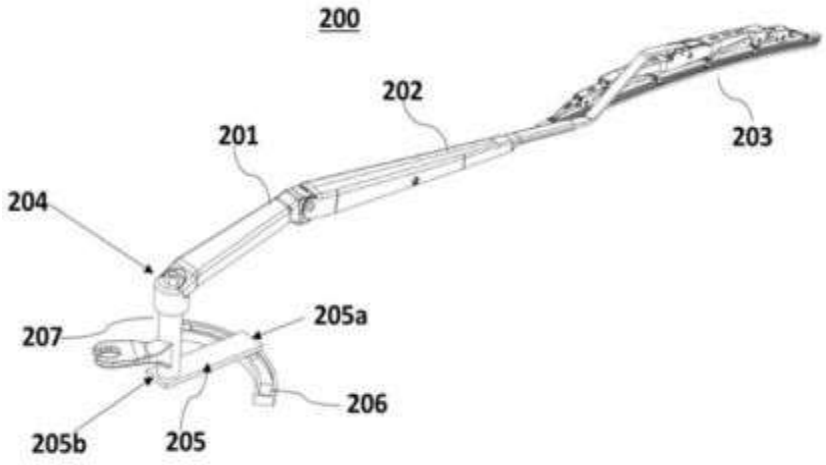

No. of Pages : 38 No. of Claims : 16

(12) PATENT APPLICATION PUBLICATION
(19) INDIA
(22) Date of filing of Application :26/12/2019

(21) Application No.201911054005 A
(43) Publication Date : 02/07/2021

(54) Title of the invention : A VEHICLE BODY STRUCTURE FOR ACCOMMODATING AN EXHAUST GAS PURIFICATION CONTAINER

(51) International classification	:B62D0043060000, B62D0043040000, B62D0021150000, B66F0009075000, B62D0035020000	(71)**Name of Applicant :** **1)MARUTI SUZUKI INDIA LIMITED** Address of Applicant :1 Nelson Mandela Road, Vasant Kunj, New Delhi-110070, India Delhi India
(31) Priority Document No	:NA	(72)**Name of Inventor :**
(32) Priority Date	:NA	**1)ABHIMANYU BANDYOPADHYAY**
(33) Name of priority country	:NA	**2)RAHUL DEV**
(86) International Application No	:NA	**3)KIRAN PAL**
Filing Date	:NA	**4)RAJAT BAGGA**
(87) International Publication No	: NA	**5)MOHIT RAWAT**
(61) Patent of Addition to Application Number	:NA	
Filing Date	:NA	
(62) Divisional to Application Number	:NA	
Filing Date	:NA	

(57) Abstract :
The present disclosure relates to a vehicle body structure (100) for accommodating an exhaust gas purification container (110). The vehicle body structure (100) comprises a vehicle underbody (102), a rear axle (104) for interconnecting rear wheels (106), a spare tyre structure (108) and an exhaust gas purification container (110) defining a front side (202) and a rear side (204). The exhaust gas purification container (110) is disposed between the rear axle (104) and the spare tyre structure (108). The rear side (204) faces the spare tyre structure (108) and is configured to be in shape of an arc (206), wherein the arc (206) resembles an outer profile of the spare tyre structure (108).

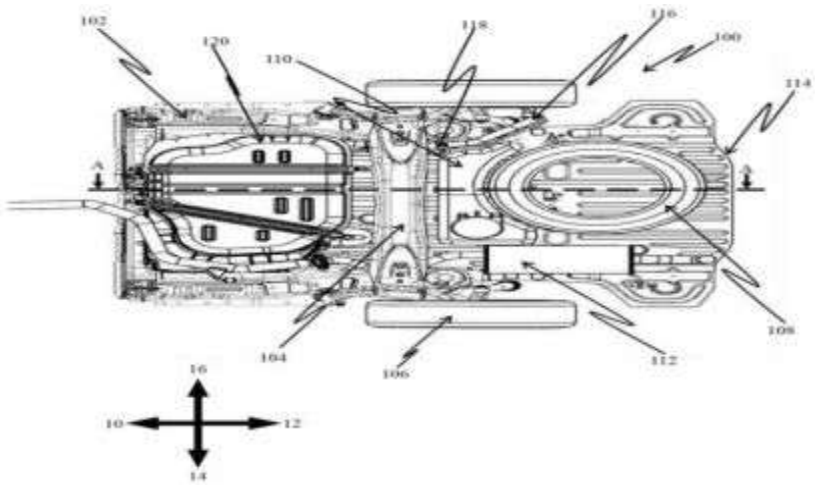

No. of Pages : 20 No. of Claims : 10

(12) PATENT APPLICATION PUBLICATION
(21) Application No.201911054006 A
(19) INDIA
(22) Date of filing of Application :26/12/2019
(43) Publication Date : 02/07/2021

(54) Title of the invention : A METHOD FOR DETECTING UN-AUTHORIZED OPENING OF COVER OF A TRACTION BATTERY PACK AND CIRCUIT THEREOF

(51) International classification	:H02J0007000000, H01M0010420000, H01M0002100000, H01M0010480000, G01R0031396000
(31) Priority Document No	:NA
(32) Priority Date	:NA
(33) Name of priority country	:NA
(86) International Application No	:NA
Filing Date	:NA
(87) International Publication No	: NA
(61) Patent of Addition to Application Number	:NA
Filing Date	:NA
(62) Divisional to Application Number	:NA
Filing Date	:NA

(71)**Name of Applicant :**
1)MARUTI SUZUKI INDIA LIMITED
Address of Applicant :1 Nelson Mandela Road, Vasant Kunj, New Delhi-110070, India Delhi India
(72)**Name of Inventor :**
1)ROOHUL ABASS PANDITH
2)ABHILASH CHOUDHARY
3)SHASHANK SHARMA
4)DR. PRASHANT TULI

(57) Abstract :
The present disclosure relates to a traction battery pack (100) for storing an event of un-authorized opening of cover of the traction battery pack. The traction battery pack (100) comprises a master battery management system (BMS) (110, 200) coupled with a plurality of battery cells (101a) from a battery string (101) connected in series to receive low voltage (LV). The traction battery pack further includes a first switch (SI) (102) provided on a positive terminal line and a second switch (S2) (103) provided on a negative terminal line. Further, a resistor (R2) (104) and a capacitor (CI) (105) provided on the positive terminal line in series and an optical isolator (106) provided in between the resistor (R2) (104) and the capacitor (CI) (105) to supply the low voltage (LV) to the master BMS (110) when the first switch (SI) (102) and the second switch (S2) (103) are closed.

No. of Pages : 24 No. of Claims : 13

(12) PATENT APPLICATION PUBLICATION
(21) Application No.201911054007 A
(19) INDIA
(22) Date of filing of Application :26/12/2019
(43) Publication Date : 02/07/2021

(54) Title of the invention : A COVER STRUCTURE FOR B-PILLAR IN A VEHICLE

(51) International classification	:B62D0025040000, B60R0022240000, B62D0025020000, B62D0029000000, B62D0029040000	(71)**Name of Applicant :** **1)MARUTI SUZUKI INDIA LIMITED** Address of Applicant :1 Nelson Mandela Road, Vasant Kunj, New Delhi-110070, India Delhi India (72)**Name of Inventor :** **1)PANKAJ SINGH BISHT** **2)AMIT SHRIVASTAVA**
(31) Priority Document No	:NA	
(32) Priority Date	:NA	
(33) Name of priority country	:NA	
(86) International Application No	:NA	
Filing Date	:NA	
(87) International Publication No	: NA	
(61) Patent of Addition to Application Number	:NA	
Filing Date	:NA	
(62) Divisional to Application Number	:NA	
Filing Date	:NA	

(57) Abstract :
Described herein is a cover structure (200) for covering an inner panel of a B-pillar in a vehicle, the cover structure (200) comprises a longitudinal portion (202) defining an upper edge portion (203) and a lower edge portion (204), wherein the upper edge portion (203) is coupled with roof of the vehicle along the B-pillar and lower edge portion (204) is coupled with side sill of the vehicle along the B-pillar, characterized in that is a reinforcement plate (205) hinged at the lower edge portion (204) of the longitudinal portion (202) such that upon folding towards inner surface (201) of the cover structure (200), the reinforcement plate (205) overlaps with a portion (206) of the cover structure (200) faced by a seat belt retractor (103) disposed on the B-pillar.

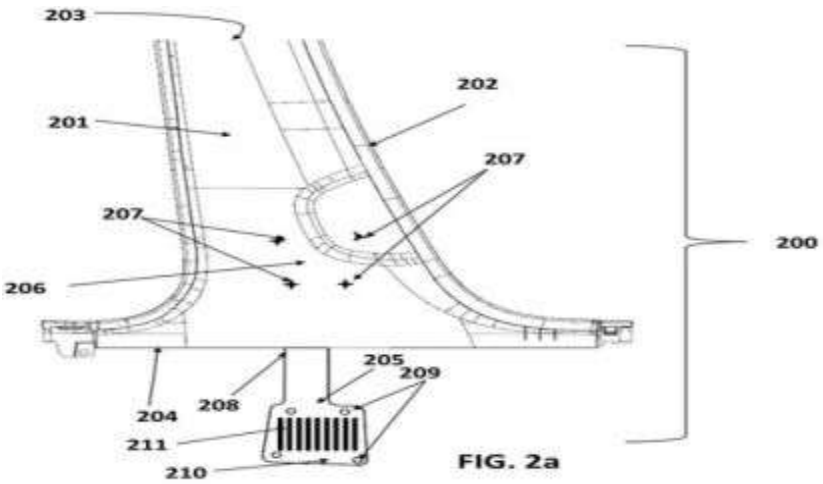

FIG. 2a

No. of Pages : 24 No. of Claims : 10

(12) PATENT APPLICATION PUBLICATION
(21) Application No.201911054008 A
(19) INDIA
(22) Date of filing of Application :26/12/2019
(43) Publication Date : 02/07/2021

(54) Title of the invention : A SIDE DOOR STRUCTURE FOR AN AUTOMOBILE TO SECURE DOOR STOPPER ASSEMBLY

(51) International classification	:B60J0005040000, E05B0017200000, B22D0017220000, E05D0005060000, E06B0003820000
(31) Priority Document No	:NA
(32) Priority Date	:NA
(33) Name of priority country	:NA
(86) International Application No	:NA
Filing Date	:NA
(87) International Publication No	: NA
(61) Patent of Addition to Application Number	:NA
Filing Date	:NA
(62) Divisional to Application Number	:NA
Filing Date	:NA

(71)**Name of Applicant :**
1)MARUTI SUZUKI INDIA LIMITED
Address of Applicant :1 Nelson Mandela Road, Vasant Kunj, New Delhi-110070, India Delhi India
(72)**Name of Inventor :**
1)AMRINDER SINGH SIDHU
2)TARANDEEP SINGH
3)RAHUL SEMWAL
4)RAGHAVENDRA KATTI

(57) Abstract :
The present subject matter relates to a side door structure for an automobile to accommodate a door stopper assembly which has an inner door panel (201) and an outer door panel, a reinforcement bracket (300) is mounted on the inner door panel (201) to reinforce the stop comp cut-out area (209) to mount the door stopper assembly, the reinforcement bracket (300) has a base (301) having a first side (302) having an arc shape and a first flange (304) extending away from the first side (302), the second flange (305) bend is in opposite direction to the first to define a step shape structure (309), the step-shape structure (309) has a base portion (306) and a top portion (308) connected by an inclined translating portion (307).

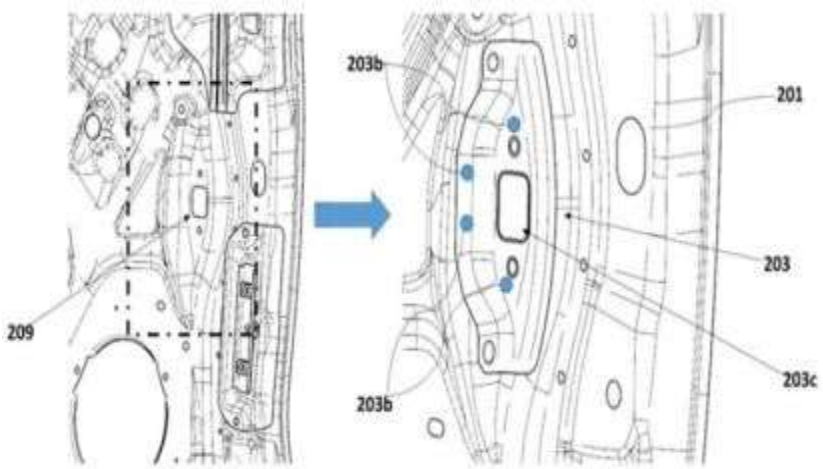

No. of Pages : 24 No. of Claims : 10

(12) PATENT APPLICATION PUBLICATION
(19) INDIA
(22) Date of filing of Application :26/12/2019

(21) Application No.201911054016 A
(43) Publication Date : 02/07/2021

(54) Title of the invention : SYSTEM AND METHOD FOR COMPUTING A REWARD FOR AN OUTCOME

(51) International classification	:G06Q0030020000, H04B0001100000, G06F0017160000, H04B0017336000, H04B0017345000	(71)**Name of Applicant :** **1)ASHUTOSH KUMAR** Address of Applicant :HH302, AMRAPALI VILLAGE, INDIRAPURAM, GHAZIABAD - 201014, UTTAR PRADESH, INDIA Uttar Pradesh India **2)AVINASH KUMAR**
(31) Priority Document No	:NA	
(32) Priority Date	:NA	(72)**Name of Inventor :**
(33) Name of priority country	:NA	**1)ASHUTOSH KUMAR**
(86) International Application No	:NA	**2)AVINASH KUMAR**
Filing Date	:NA	
(87) International Publication No	: NA	
(61) Patent of Addition to Application Number	:NA	
Filing Date	:NA	
(62) Divisional to Application Number	:NA	
Filing Date	:NA	

(57) Abstract :
A system for computing reward for an outcome is disclosed. The system includes a processing subsystem including an entry receiving subsystem to generate a first matrix based on a plurality of entries and a second matrix based on a plurality of outcomes received from the corresponding plurality of nodes; a matrix creation subsystem to compute a third matrix based on the first matrix and the second matrix; a statistical distribution computation subsystem to compute a first value representative of a statistical distribution parameter for each column of the third matrix by applying a statistical distribution formula; a reward computation subsystem is configured to compute a second value representative of the reward based on each of the first value representative of the corresponding statistical distribution parameter, plurality of entries received from the corresponding nodes and a reward function selected from a group of reward functions.

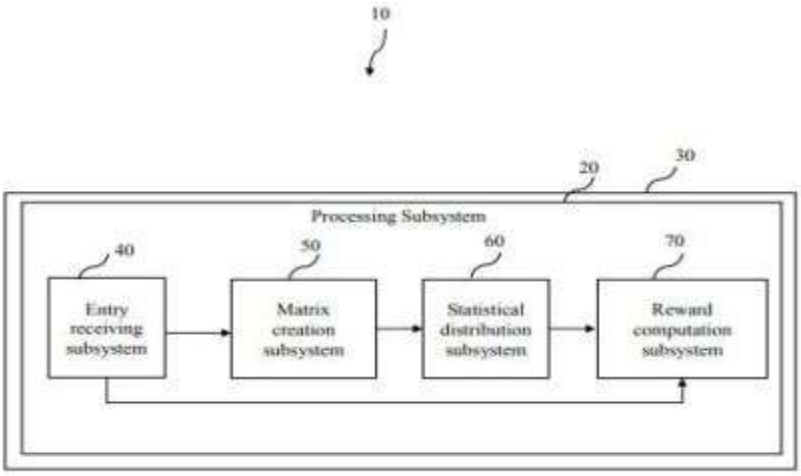

No. of Pages : 26 No. of Claims : 5

(12) PATENT APPLICATION PUBLICATION
(21) Application No.201911054040 A
(19) INDIA
(22) Date of filing of Application :26/12/2019
(43) Publication Date : 02/07/2021

(54) Title of the invention : A DEW CONDENSATION ELIMINATION STRUCTURE IN A REFRIGERATOR

(51) International classification	:F25D0021040000, F25D0017060000, F25D0011020000, F25C0001240000, F25D0029000000	(71)**Name of Applicant :** **1)LG ELECTRONICS INC.** Address of Applicant :20 Yeouido-dong, Yeongdeungpo-gu, Seoul 150-721, Republic of Korea Republic of Korea
(31) Priority Document No	:NA	(72)**Name of Inventor :** **1)Gupta Gaurav** **2)Gautam Piyush**
(32) Priority Date	:NA	
(33) Name of priority country	:NA	
(86) International Application No	:NA	
Filing Date	:NA	
(87) International Publication No	: NA	
(61) Patent of Addition to Application Number	:NA	
Filing Date	:NA	
(62) Divisional to Application Number	:NA	
Filing Date	:NA	

(57) Abstract :
A dew condensation elimination structure in a refrigerator (100) is provided. The dew condensation elimination structure comprises a hot line (108) provided between a freezer compartment (104) and a refrigeration compartment (106) of the refrigerator (100), an electric heater (102) provided in a flange (202) around the freezer compartment (104) and the refrigeration compartment (106) in the refrigerator (100) and a plurality of sensors to detect the formation of dew around the freezer compartment (104) and the refrigeration compartment (106) . The hot line (108) facilitates in removing the dew formed between the freezer compartment (104) and the refrigeration compartment (106) and upon detecting the formation of dew around the freezer compartment (104) and the refrigeration compartment (106) via the sensors, the electric heater (102) facilitates in removing the dew formed around the freezer compartment (104) and the refrigeration compartment (106).

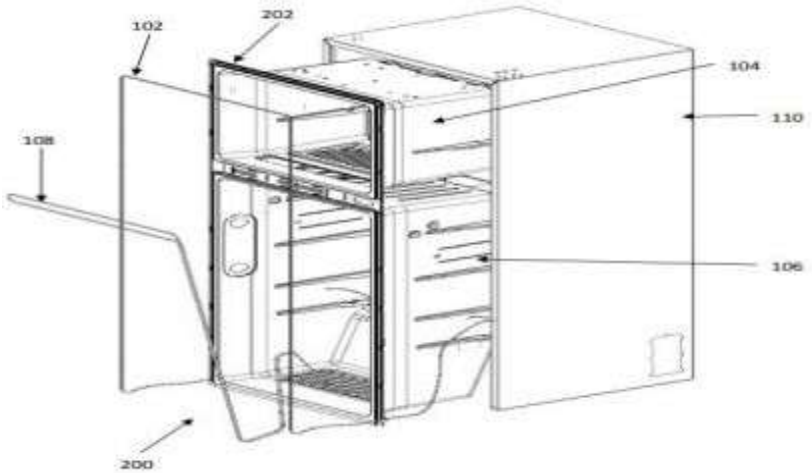

No. of Pages : 19 No. of Claims : 14

(12) PATENT APPLICATION PUBLICATION
(19) INDIA
(22) Date of filing of Application :26/12/2019

(21) Application No.201911054041 A
(43) Publication Date : 02/07/2021

(54) Title of the invention : AUTOMATED ANALYSIS OF INJECTION MOLDING PROCESS

(51) International classification	:B29C0045760000, E21B0049000000, B29C0045170000, B29C0064386000, G06F0008610000	(71)**Name of Applicant :** **1)LG ELECTRONICS INC.** Address of Applicant :20 Yeouido-dong, Yeongdeungpo-gu, Seoul 150-721, Republic of Korea Republic of Korea (72)**Name of Inventor :** **1)Singh Simranjit**
(31) Priority Document No	:NA	
(32) Priority Date	:NA	
(33) Name of priority country	:NA	
(86) International Application No	:NA	
Filing Date	:NA	
(87) International Publication No	: NA	
(61) Patent of Addition to Application Number	:NA	
Filing Date	:NA	
(62) Divisional to Application Number	:NA	
Filing Date	:NA	

(57) Abstract :
An embodiment of the present invention provides, a computer implemented method for conceptualization and analysis of injection molding of at least one component in an injection molding machine. The computer implemented method includes providing a finite mesh of the at least one component to be molded. The computer implemented method also includes providing at least one parameter for the finite mesh and analyzing the at least one parameter to obtain one or more model for the at least one component. Further, the computer implemented method includes determining one or more properties of each model from amongst the one or more model. Additionally, the computer implemented method includes outputting the one or more model along with the one or more properties for analysis of the injection molding of the at least one component.

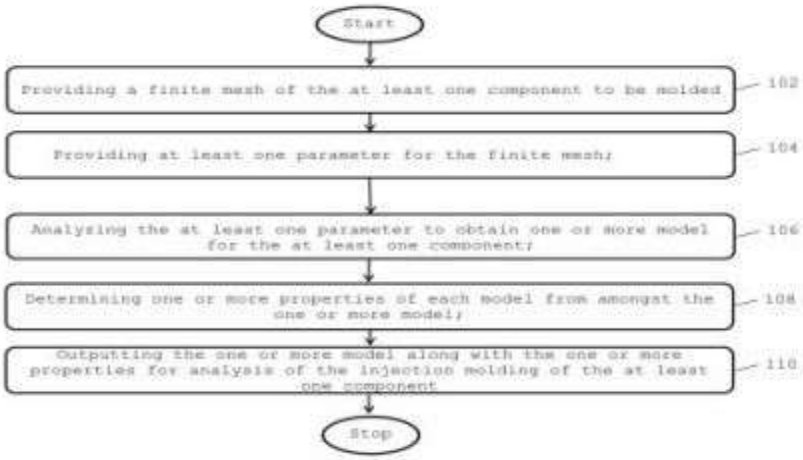

No. of Pages : 23 No. of Claims : 16

(12) PATENT APPLICATION PUBLICATION
(19) INDIA
(22) Date of filing of Application :26/12/2019

(21) Application No.201911054042 A
(43) Publication Date : 02/07/2021

(54) Title of the invention : AN AIR FILTER DUST CLEANING ARRANGEMENT

(51) International classification	:B01D0046000000, A47L0013520000, A47L0011400000, F24F0013280000, B01D0046100000	(71)**Name of Applicant :** **1)LG ELECTRONICS INC.** Address of Applicant :20 Yeouido-dong, Yeongdeungpo-gu, Seoul 150-721, Republic of Korea Republic of Korea
(31) Priority Document No	:NA	(72)**Name of Inventor :**
(32) Priority Date	:NA	**1)Singh Navtej**
(33) Name of priority country	:NA	**2)Dang Vikram**
(86) International Application No	:NA	
Filing Date	:NA	
(87) International Publication No	: NA	
(61) Patent of Addition to Application Number	:NA	
Filing Date	:NA	
(62) Divisional to Application Number	:NA	
Filing Date	:NA	

(57) Abstract :
An air filter dust cleaning arrangement (10 0) for an air conditioner is provided. The arrangement (100) comprises a frame (102) provided with at least one holder (104) for attaching a threaded rod (106) . The frame (102) further comprises a guide slot (114) opposite to the threaded rod (106) . The arrangement (100) also includes a brush (108) and a dust pan (110) to remove dust particles deposited on an air filter. The dust pan (110) and the brush (108) are parallel to each other and move with the threaded collar (112). The dust pan (110) collects the removed dust particles of the air filter by the brush (108) and dispenses them in a dust box (500).

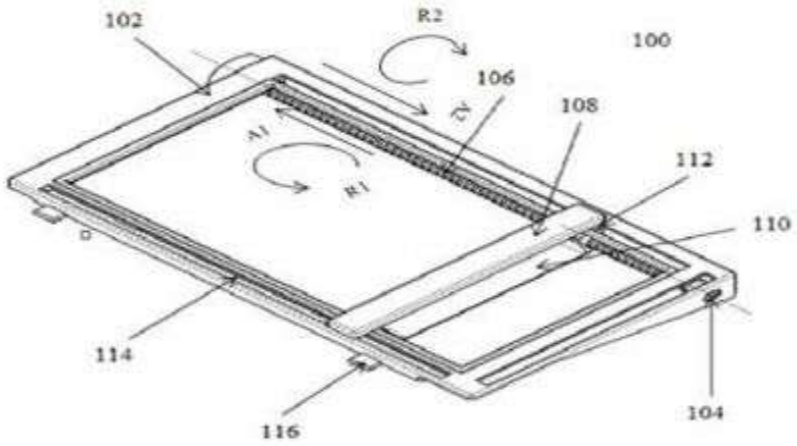

No. of Pages : 24 No. of Claims : 15

(12) PATENT APPLICATION PUBLICATION
(19) INDIA
(22) Date of filing of Application :26/12/2019

(21) Application No.201911054043 A
(43) Publication Date : 02/07/2021

(54) Title of the invention : AN ARRANGEMENT FOR CONTROLLING WATER DRAINAGE OF A WASHING MACHINE

(51) International classification	:A61F0013420000, D06F0037420000, D06F0039080000, E03D0005100000, F16F0015020000	(71)**Name of Applicant :** **1)LG ELECTRONICS INC.** Address of Applicant :20 Yeouido-dong, Yeongdeungpo-gu, Seoul 150-721, Republic of Korea Republic of Korea (72)**Name of Inventor :** **1)Gill Baljit** **2)Upadhyay Awadhesh**
(31) Priority Document No	:NA	
(32) Priority Date	:NA	
(33) Name of priority country	:NA	
(86) International Application No	:NA	
Filing Date	:NA	
(87) International Publication No	: NA	
(61) Patent of Addition to Application Number	:NA	
Filing Date	:NA	
(62) Divisional to Application Number	:NA	
Filing Date	:NA	

(57) Abstract :
An arrangement (10 0) for controlling water drainage of a washing machine. The arrangement (10 0) housing (102), a plunger (110), a wetness detection sensor (112) and a control unit. The housing (102) is provided at a base cabinet (202) of a washing machine. The plunger (110) provided inside the housing (102), the plunger (110) is coupled with a motor (104) via a threaded shaft (108) . The wetness detection sensor (112) is attached to a bottom portion of the plunger (110) . The wetness detection sensor (112) detects the height of the water at the floor surface by up and down movement of the plunger (110) over the threaded shaft (108) . The control unit stops the water drainage from the washing machine when the water is detected by the wetness detection sensor (112) at its floor surface.

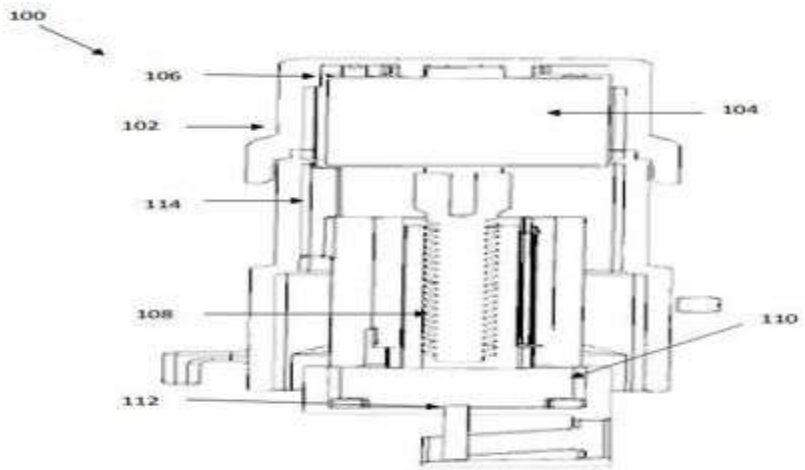

No. of Pages : 17 No. of Claims : 14

(12) PATENT APPLICATION PUBLICATION
(19) INDIA
(22) Date of filing of Application :26/12/2019

(21) Application No.201911054044 A
(43) Publication Date : 02/07/2021

(54) Title of the invention : AN ARRANGEMENT TO DISPENSE HOT AND COLD WATER IN A FLUID DISPENSER

(51) International classification	:B67D0001080000, G05D0023130000, A61F0007000000, F24F0011300000, F24F0005000000	(71)**Name of Applicant :** **1)LG ELECTRONICS INC.** Address of Applicant :20 Yeouido-dong, Yeongdeungpo-gu, Seoul 150-721, Republic of Korea Republic of Korea (72)**Name of Inventor :** **1)Goyal Rajat**
(31) Priority Document No	:NA	
(32) Priority Date	:NA	
(33) Name of priority country	:NA	
(86) International Application No	:NA	
Filing Date	:NA	
(87) International Publication No	: NA	
(61) Patent of Addition to Application Number	:NA	
Filing Date	:NA	
(62) Divisional to Application Number	:NA	
Filing Date	:NA	

(57) Abstract :
ABSTRACT AN ARRANGEMENT TO DISPENSE HOT AND COLD WATER IN A FLUID DISPENSER An arrangement (100) to dispense hot and cold water in a fluid dispenser is provided. The arrangement (100) comprises of a plurality of peltier modules (102, 104, 106) facilitating in heating and cooling of the water, a plurality of sensors (108) to maintain a predetermined temperature of hot water and cold water and a control unit (110) for controlling the operations of the plurality of peltier modules (102, 104, 106). The fluid dispenser dispenses the hot water and the cold water in the predetermined temperatures and also dispenses the water without any heating and cooling process, as per user needs. Fig. 1

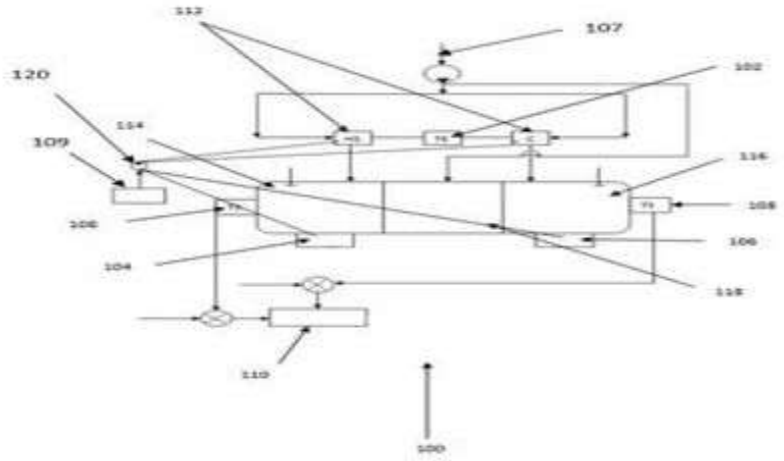

No. of Pages : 24 No. of Claims : 16

(12) PATENT APPLICATION PUBLICATION
(19) INDIA
(22) Date of filing of Application :26/12/2019

(21) Application No.201911054049 A
(43) Publication Date : 02/07/2021

(54) Title of the invention : POLYMER NANOCOMPOSITE AND IMPLEMENTATIONS THEREOF

(51) International classification	:G01N0033533000, H05B0031000000, B01J0020286000, C02F0003280000, B63C0007260000	(71)**Name of Applicant :** **1)CHAIRMAN, DEFENCE RESEARCH & DEVELOPMENT ORGANISATION** Address of Applicant :Ministry of Defence, Govt. of India, Room No 348, B - Wing, DRDO Bhawan, Rajaji Marg, New Delhi 110 011, India Delhi India
(31) Priority Document No	:NA	
(32) Priority Date	:NA	(72)**Name of Inventor :**
(33) Name of priority country	:NA	**1)PRIYA, Vedanarayanan**
(86) International Application No	:NA	**2)SASIKUMAR, Krishnamoorthy**
Filing Date	:NA	**3)DHANALAKSHMI, Sathishkumar**
(87) International Publication No	: NA	**4)SOLOMON, Uthriappan**
(61) Patent of Addition to Application Number	:NA	**5)BALAMURUGAN, Venkatesan**
Filing Date	:NA	**6)SANJEEVI, Prasath**
		7)CHENNAKESAVULU, Kattela
(62) Divisional to Application Number	:NA	**8)SASIPRABA, Thankappan**
Filing Date	:NA	

(57) Abstract :
The present disclosure provides a multifunctional polymer nanocomposite composition comprising: a) at least one polymer base; b) 1-5 php of at least one functionalised nanofiller; and c) 30-70 php of at least one micro filler, wherein the at least one functionalised nanofiller and the at least one micro filler dispersed in the at least one polymer base. A convenient process for preparing the composition is also provided. The compositions of the present disclosure exhibits effective ElectroMagnetic Interference(EMI) shielding properties along with good physical, mechanical, thermal and electrical properties. An article comprisisng the multifunctional polymer nanocomposite composition is also disclosed herein.

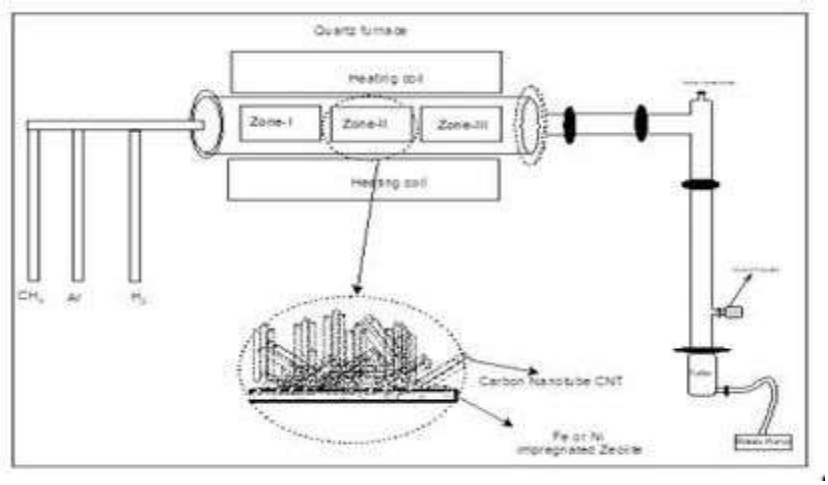

No. of Pages : 47 No. of Claims : 14

(12) PATENT APPLICATION PUBLICATION
(19) INDIA
(22) Date of filing of Application :26/12/2019

(21) Application No.201911054054 A
(43) Publication Date : 02/07/2021

(54) Title of the invention : DRUG DETECTION DEVICE

(51) International classification	:A61B0005000000, G06K0009000000, G06T0007000000, A61B0003140000, G06K0009460000	(71)**Name of Applicant :** **1)Chitkara Innovation Incubator Foundation** Address of Applicant :SCO: 160-161, Sector -9c, Madhya Marg, Chandigarh- 160009, India. Chandigarh India
(31) Priority Document No	:NA	(72)**Name of Inventor :**
(32) Priority Date	:NA	**1)GERA, Ashish**
(33) Name of priority country	:NA	**2)AHUJA, Sachin**
(86) International Application No	:NA	**3)SALUJA, Nitin**
Filing Date	:NA	
(87) International Publication No	: NA	
(61) Patent of Addition to Application Number	:NA	
Filing Date	:NA	
(62) Divisional to Application Number	:NA	
Filing Date	:NA	

(57) Abstract :
A drug detection device is disclosed. The device includes a camera for capturing one or more images of an eye, a processing unit operatively coupled with the camera. The processing unit comprising a processor coupled to a memory, the memory storing instructions executable by the processor to extract a set of ocular features from the captured one or more images, evaluate a weighted average of the extracted set of ocular features. Generate an identifier based on the weighted average of the extracted set of ocular features, and compare the generated identifier with a predefined threshold identifier, where the threshold identifier is the weighted average of the extracted set of ocular features associated with the eye. Based on the comparison when the identifier is more than or equal to the threshold identifier, the processing unit generates an alert signal.

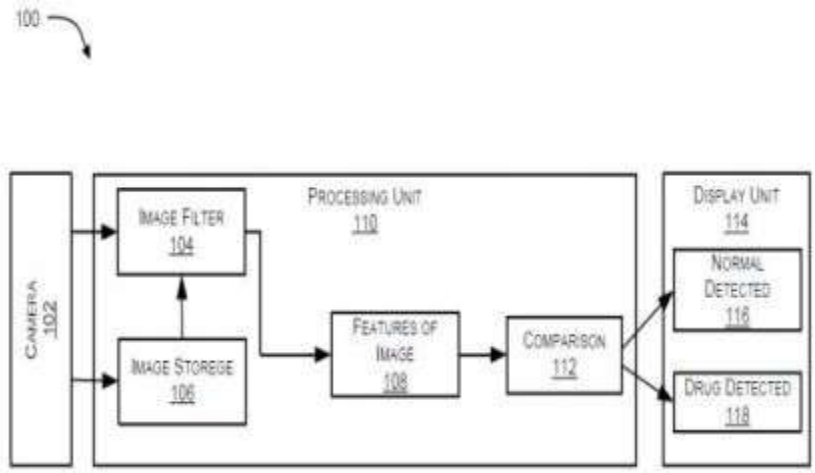

No. of Pages : 17 No. of Claims : 9

(12) PATENT APPLICATION PUBLICATION
(21) Application No.201911054055 A
(19) INDIA
(22) Date of filing of Application :26/12/2019
(43) Publication Date : 02/07/2021

(54) Title of the invention : HERBAL COMPOSITION COMPRISING PLUCHEA LANCEOLATA AND TRIGONELLA FOENUM-GRAECUM

(51) International classification	:A61K0031355000, A61K0009107000, A61K0008060000, C11D0001720000, A61K0047220000	(71)**Name of Applicant :** **1)Chitkara Innovation Incubator Foundation** Address of Applicant :SCO: 160-161, Sector -9c, Madhya Marg, Chandigarh- 160009, India. Chandigarh India
(31) Priority Document No	:NA	(72)**Name of Inventor :**
(32) Priority Date	:NA	**1)SHARMA, Neelam**
(33) Name of priority country	:NA	**2)SINGH, Sukhbir**
(86) International Application No	:NA	**3)GREWAL, Ajmer Singh**
Filing Date	:NA	**4)BANSAL, Anil**
(87) International Publication No	: NA	**5)BEHL, Tapan**
(61) Patent of Addition to Application Number	:NA	**6)ARORA, Sandeep**
Filing Date	:NA	
(62) Divisional to Application Number	:NA	
Filing Date	:NA	

(57) Abstract :
The present invention relates to a micro-emulsion composition for the treatment of digestive disturbances. Particularly, the present invention relates to a d-a-Tocopheryl polyethylene glycol 1000 succinate (TPGS) based herbal micro-emulsion composition comprising of Pluchealanceolata and Trigonellafoenum-graecumand a process of preparing the same.

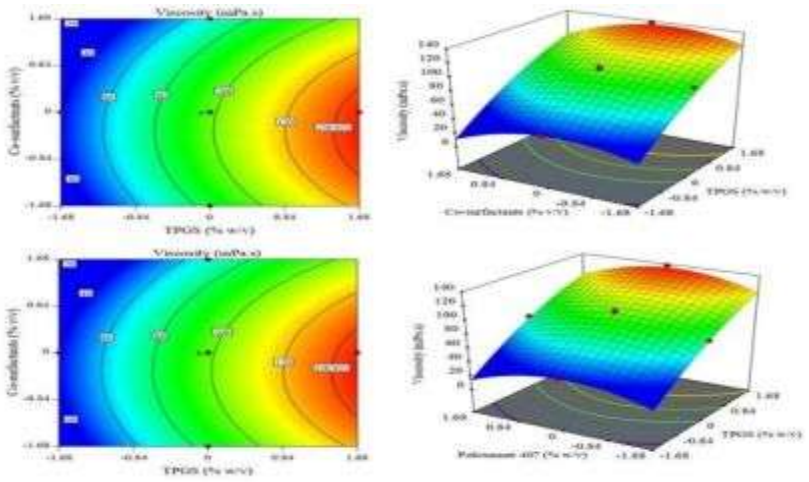

No. of Pages : 26 No. of Claims : 12

(12) PATENT APPLICATION PUBLICATION
(21) Application No.201911054063 A
(19) INDIA
(22) Date of filing of Application :26/12/2019
(43) Publication Date : 02/07/2021

(54) Title of the invention : DETERGENT DETECTION IN WASHING MACHINE

(51) International classification	:D06F0039020000, G01S0015880000, G01F0023296000, B60S0001080000, C10M0169040000	(71)**Name of Applicant :** **1)LG ELECTRONICS INC.** Address of Applicant :20 Yeouido-dong, Yeongdeungpo-gu, Seoul 150-721, Republic of Korea Republic of Korea
(31) Priority Document No	:NA	(72)**Name of Inventor :** **1)Kumar Dharmendar** **2)Upadhyay Awadhesh**
(32) Priority Date	:NA	
(33) Name of priority country	:NA	
(86) International Application No	:NA	
Filing Date	:NA	
(87) International Publication No	: NA	
(61) Patent of Addition to Application Number	:NA	
Filing Date	:NA	
(62) Divisional to Application Number	:NA	
Filing Date	:NA	

(57) Abstract :
An embodiment of the present invention discloses, an arrangement (200) to detect amount of detergent in a detergent box (100) of a washing machine. The arrangement (200) includes an optical sensor coupled to a wall of the detergent box (100) . The optical sensor is movable along the wall. Further, the optical sensor has a transmitter (202) to transmit a transmitted signal through the wall into the detergent box (100) . Next, a receiver (204) , of the optical sensor, receives a received signal reflected from the detergent box (10 0) . The arrangement (200) also includes a controller to determine a difference between the transmitted signal and the reflected signal. The controller also detects amount of detergent in the detergent box (100) based on the difference determined.

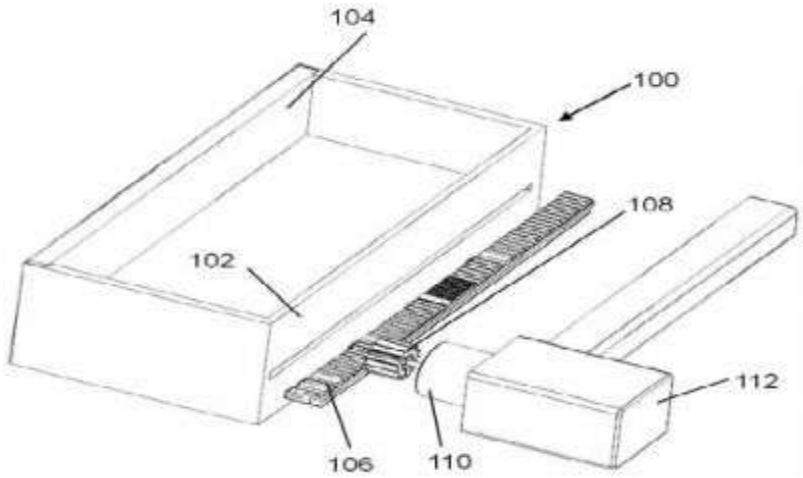

No. of Pages : 28 No. of Claims : 20

(12) PATENT APPLICATION PUBLICATION
(21) Application No.201911054064 A
(19) INDIA
(22) Date of filing of Application :26/12/2019
(43) Publication Date : 02/07/2021

(54) Title of the invention : AN ADJUSTABLE LINT FILTER SYSTEM IN A WASHING MACHINE

(51) International classification	:D06F0058220000, D06F0033020000, D06F0039100000, D06F0025000000, H04N0001060000	(71)**Name of Applicant :** **1)LG ELECTRONICS INC.** Address of Applicant :20 Yeouido-dong, Yeongdeungpo-gu, Seoul 150-721, Republic of Korea Republic of Korea (72)**Name of Inventor :** **1)Kale Dinesh**
(31) Priority Document No	:NA	
(32) Priority Date	:NA	
(33) Name of priority country	:NA	
(86) International Application No	:NA	
Filing Date	:NA	
(87) International Publication No	: NA	
(61) Patent of Addition to Application Number	:NA	
Filing Date	:NA	
(62) Divisional to Application Number	:NA	
Filing Date	:NA	

(57) Abstract :
An adjustable lint filter (110) system in a washing machine is provided. The system comprises of an outer drum (102) where a motor (104) with a lead screw (106) coupled with a holder (108) is mounted on the outer drum (102), an inner drum (114) where a lint filter (110) coupled with a connecting channel (112) is mounted on the inner drum (114), a sensing module and a control unit configured to adjust the lint filter (110). The lint filter (110) is coupled with the holder (108) via the connecting channel (112) and when the sensing module detects the water level in the inner drum (114), the control unit positions the lint filter (110) to a pre-determined level by rotating the motor (104) and moving the lint filter (110) to the pre¬determined level via the lead screw (106) .

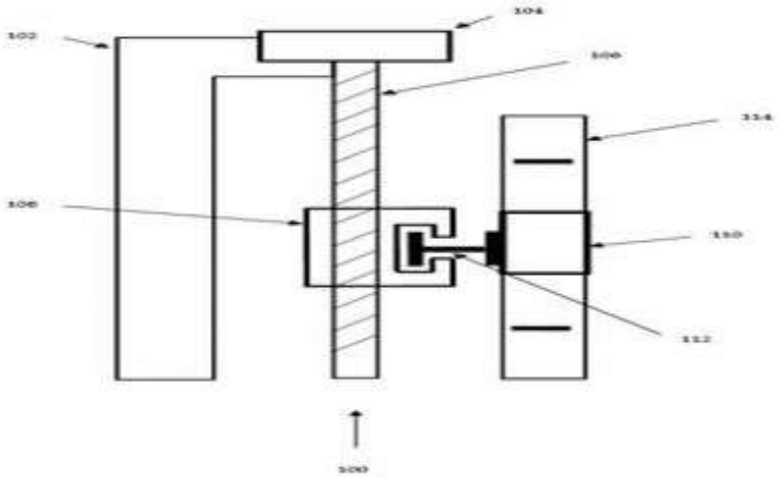

No. of Pages : 19 No. of Claims : 17

(12) PATENT APPLICATION PUBLICATION
(19) INDIA
(22) Date of filing of Application :26/12/2019
(21) Application No.201911054065 A
(43) Publication Date : 02/07/2021

(54) Title of the invention : AN ARRANGEMENT FOR AUTOMATIC DISPENSING OF LAUNDRY IN A WASHING MACHINE

(51) International classification	:D06F0039020000, D06F0039120000, D06F0039000000, D06F0039080000, D06F0037260000	(71)**Name of Applicant :** **1)LG ELECTRONICS INC.** Address of Applicant :20 Yeouido-dong, Yeongdeungpo-gu, Seoul 150-721, Republic of Korea Republic of Korea
(31) Priority Document No	:NA	(72)**Name of Inventor :** **1)Aggarwal Sanyam**
(32) Priority Date	:NA	
(33) Name of priority country	:NA	
(86) International Application No	:NA	
Filing Date	:NA	
(87) International Publication No	: NA	
(61) Patent of Addition to Application Number	:NA	
Filing Date	:NA	
(62) Divisional to Application Number	:NA	
Filing Date	:NA	

(57) Abstract :
An arrangement (100) for automatic dispensing of laundry in a washing machine (102) is provided. The arrangement (100) comprises a lid (108), a stand (104), a control panel (110) and a laundry cabinet (112) . The lid (108) is provided for closing an opening of a drum (106) of the washing machine (102) . The stand (104) is provided at a rear portion of the washing machine (102) . The control panel (110) is provided at an upper portion of the stand (104) . The laundry cabinet (112) is coupled with the control panel (110) to store different types of laundry. The control panel (110) controls the opening and closing of the laundry cabinet (112) for dispensing the laundry into the washing machine (102) for washing.

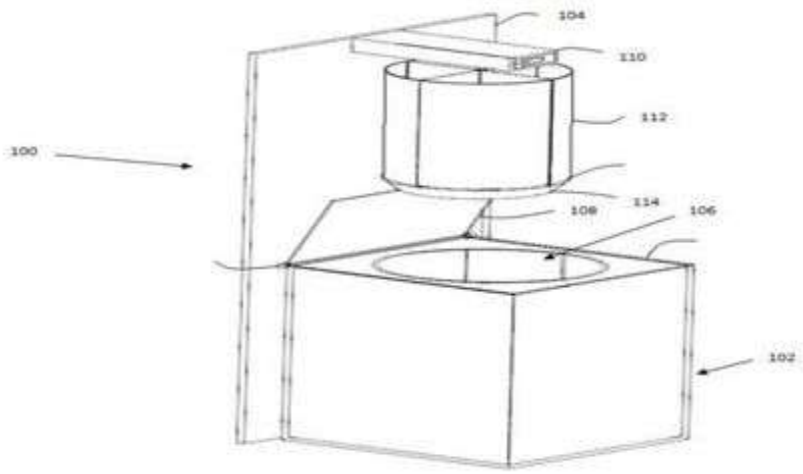

No. of Pages : 23 No. of Claims : 19

(12) PATENT APPLICATION PUBLICATION
(19) INDIA
(22) Date of filing of Application :26/12/2019

(21) Application No.201911054066 A
(43) Publication Date : 02/07/2021

(54) Title of the invention : A REFRIGERATION CYCLE APPARATUS IN A REFRIGERATION SYSTEM

(51) International classification	:F25B0049020000, F25B0043000000, F25B0041000000, F25B0040000000, F25D0011020000	(71)**Name of Applicant :** **1)LG ELECTRONICS INC.** Address of Applicant :20 Yeouido-dong, Yeongdeungpo-gu, Seoul 150-721, Republic of Korea Republic of Korea (72)**Name of Inventor :** **1)Bisen Sudhir**
(31) Priority Document No	:NA	
(32) Priority Date	:NA	
(33) Name of priority country	:NA	
(86) International Application No	:NA	
Filing Date	:NA	
(87) International Publication No	: NA	
(61) Patent of Addition to Application Number	:NA	
Filing Date	:NA	
(62) Divisional to Application Number	:NA	
Filing Date	:NA	

(57) Abstract :
A refrigeration cycle apparatus (100) in a refrigeration system is provided. The refrigeration cycle apparatus (100) comprises of a first evaporator (108) provided in a refrigeration compartment of the refrigerator, a second evaporator (116) provided in a freezer compartment of the refrigerator, a separator (110) configured to separate refrigerant flowing from the first evaporator (108) into liquid refrigerant and gaseous refrigerant, an ejector (112) configured to mix refrigerant flowing from the separator (110) and the second evaporator (116) . The liquid refrigerant from the separator (110) flows to the ejector (112) via the second evaporator (116), and the gaseous refrigerant from the separator (110) flows to the ejector (112) and upon mixing the liquid refrigerant and the gaseous refrigerant, the ejector (112) feeds the mixed refrigerant to a compressor (102) to complete the refrigeration cycle.

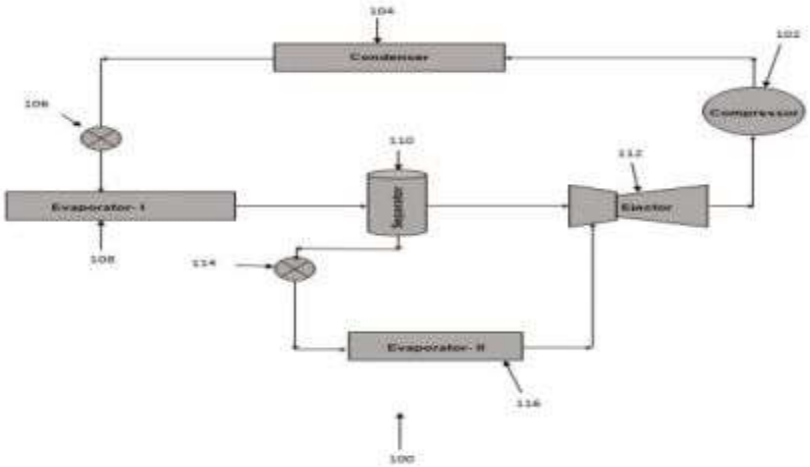

No. of Pages : 21 No. of Claims : 12

(12) PATENT APPLICATION PUBLICATION
(19) INDIA
(22) Date of filing of Application :27/12/2019

(21) Application No.201911054084 A
(43) Publication Date : 02/07/2021

(54) Title of the invention : CURVED ROOF POLYHOUSE STRUCTURE FOR WATER HARVESTING

(51) International classification	:H01Q0001420000, A01G0009140000, B63B0035440000, E03B0003280000, H01L0021266000	(71)**Name of Applicant :** **1)SHOOLINI UNIVERSITY OF BIOTECHNOLOGY AND MANAGEMENT SCIENCES** Address of Applicant :VILLAGE- BHAJOL, P.O. SULTANPUR, SOLAN- 173229 (H.P) Himachal Pradesh India
(31) Priority Document No	:NA	(72)**Name of Inventor :**
(32) Priority Date	:NA	**1)KARTIK CHAUHAN**
(33) Name of priority country	:NA	**2)DR. RUPAK NAGRAIK**
(86) International Application No	:NA	
Filing Date	:NA	
(87) International Publication No	: NA	
(61) Patent of Addition to Application Number	:NA	
Filing Date	:NA	
(62) Divisional to Application Number	:NA	
Filing Date	:NA	

(57) Abstract :
Polyhouse cultivation of vegetables is emerging as a specialized production technology to overcome biotic and abiotic stresses and to break the seasonal barrier production in agriculture. In our study, modified structure of poly house helps to overcome problems such as crop destruction caused by weather, water shortage, soil erosion and inability to grow two different seasonal crops simultaneously. The new structural design of polyhouse provides stability and maximize the harvesting of rain water without changing the functionality of the polyhouse structure.

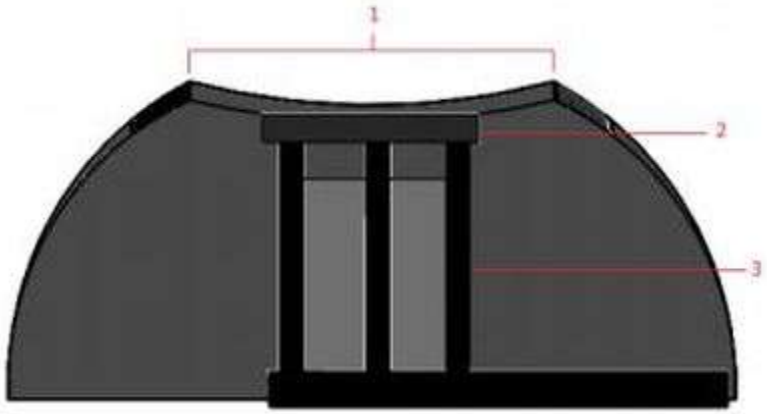

No. of Pages : 11 No. of Claims : 6

(12) PATENT APPLICATION PUBLICATION
(21) Application No.201911054114 A
(19) INDIA
(22) Date of filing of Application :27/12/2019
(43) Publication Date : 02/07/2021

(54) Title of the invention : LAMP HEAT-SINKING CUP AND LAMP

(51) International classification	:F21K0009690000, G02B0027640000, F16C0011060000, A61F0002460000, H01M0012060000	(71)**Name of Applicant :** **1)CHENFENG TECH PRIVATE LIMITED** Address of Applicant :PLOT NO - 21, SECTOR- ECOTECH-1, EXTENSION 1, GREATER NOIDA, Gautam Buddha Nagar, Uttar Pradesh, Uttar Pradesh India
(31) Priority Document No	:NA	(72)**Name of Inventor :**
(32) Priority Date	:NA	**1)Wenjian He**
(33) Name of priority country	:NA	
(86) International Application No	:NA	
Filing Date	:NA	
(87) International Publication No	: NA	
(61) Patent of Addition to Application Number	:NA	
Filing Date	:NA	
(62) Divisional to Application Number	:NA	
Filing Date	:NA	

(57) Abstract :
Disclosed are a lamp heat-sinking cup and a lamp, wherein the lamp heat-sinking cup comprises a small opening portion, a large opening portion, and a conical portion which connects the large opening portion and the small opening portion; wherein a cup nesting step is provided on the small opening portion or the large opening portion, such that when two heat-sinking cups are nested, fitting of the cup nesting steps enables formation of an interstice-fitting between those portions other than the cup nesting step; when the rear heat-sinking cup is nested into the current heat-sinking cup, presence of the cup nesting steps plays a role of supporting the front heat-sinking cup, thereby preventing the rear heat-sinking cup from being constantly squeezed and caught into the inner cavity of the front heat-sinking cup.

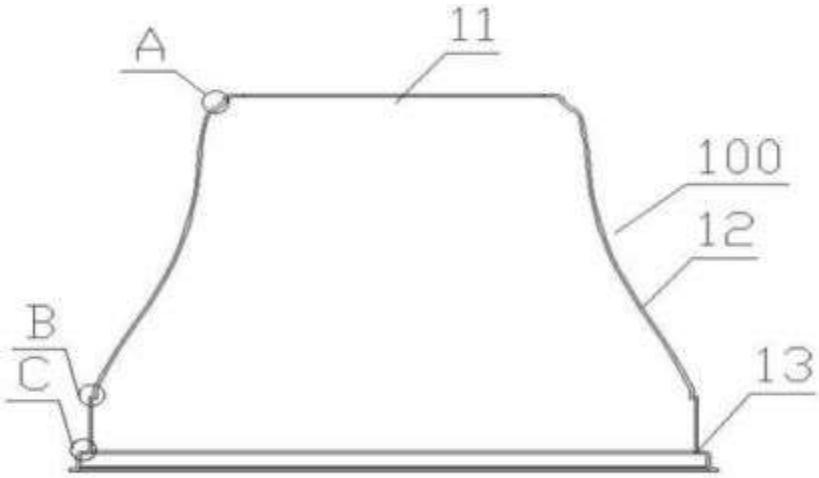

No. of Pages : 26 No. of Claims : 10

(12) PATENT APPLICATION PUBLICATION
(19) INDIA
(22) Date of filing of Application :27/12/2019

(21) Application No.201911054177 A
(43) Publication Date : 02/07/2021

(54) Title of the invention : AN ARRANGEMENT TO REGULATE WATER FLOW IN A WASHING MACHINE

(51) International classification	:D06F0075180000, E03C0001080000, G05D0016160000, A62C0035000000, B01D0035143000	(71)**Name of Applicant :** **1)LG ELECTRONICS INC.** Address of Applicant :20 Yeouido-dong, Yeongdeungpo-gu, Seoul 150-721, Republic of Korea Republic of Korea (72)**Name of Inventor :** **1)Verma Rituraj** **2)Senthilkumar Chidambaram Rajendran**
(31) Priority Document No	:NA	
(32) Priority Date	:NA	
(33) Name of priority country	:NA	
(86) International Application No	:NA	
Filing Date	:NA	
(87) International Publication No	: NA	
(61) Patent of Addition to Application Number	:NA	
Filing Date	:NA	
(62) Divisional to Application Number	:NA	
Filing Date	:NA	

(57) Abstract :
An arrangement (100) to regulate water flow in a washing machine is provided. The arrangement (100) comprises of a poppet assembly (102) , a switch (104) and a valve (106) . The water in the arrangement (100) upon reaching a pressure limit push the poppet assembly (102) to activate the switch (104) facilitating in the flow of water by opening a valve (106) in the arrangement (10 0). And, upon reduced water flow pressure the poppet assembly (102) in the arrangement (100) stops the flow of water, by deactivating the switch (104) and closing the valve (106) .

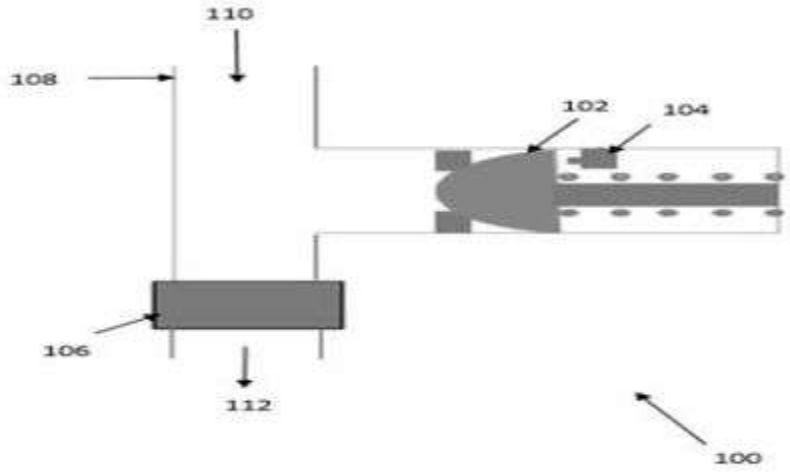

No. of Pages : 17 No. of Claims : 20

(12) PATENT APPLICATION PUBLICATION
(19) INDIA
(22) Date of filing of Application :27/12/2019

(21) Application No.201911054178 A
(43) Publication Date : 02/07/2021

(54) Title of the invention : A SYSTEM TO REUSE RINSE WATER IN A WASHING MACHINE

(51) International classification	:D06F0039000000, C11D0001720000, C11D0003480000, B08B0003020000, A61B0005160000	(71)**Name of Applicant :** **1)LG ELECTRONICS INC.** Address of Applicant :20 Yeouido-dong, Yeongdeungpo-gu, Seoul 150-721, Republic of Korea Republic of Korea (72)**Name of Inventor :** **1)Sharma Nav Raj**
(31) Priority Document No	:NA	
(32) Priority Date	:NA	
(33) Name of priority country	:NA	
(86) International Application No	:NA	
Filing Date	:NA	
(87) International Publication No	: NA	
(61) Patent of Addition to Application Number	:NA	
Filing Date	:NA	
(62) Divisional to Application Number	:NA	
Filing Date	:NA	

(57) Abstract :
A system (200) to reuse rinse water in a washing machine (100) is provided. The system (200) comprises a sensor to detect dissolved detergent content in the rinse water. The system (200) further comprises a microprocessor which is communicatively coupled to the sensor, to determine if the dissolved detergent content in the rinse water is less than a predefined level of the detergent content in the rinse water. The system (200) furthermore comprises one or more water tanks (202, 204) . When the dissolved detergent content in the rinse water is less than a predefined level of the detergent content in the rinse water, the rinse water is collected in the one or more water tanks (202, 204) to be pumped from the one or more water tanks (202, 204) into a washing drum (102) for reuse.

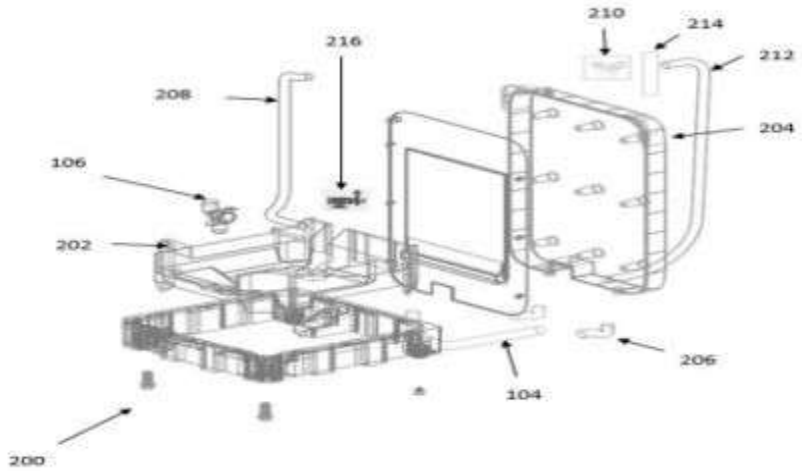

No. of Pages : 22 No. of Claims : 21

(12) PATENT APPLICATION PUBLICATION
(19) INDIA
(22) Date of filing of Application :27/12/2019

(21) Application No.201911054228 A
(43) Publication Date : 02/07/2021

(54) Title of the invention : TRANSFORMED PLANTS HAVING INCREASED CAROTENOID LEVEL AND METHODS OF PRODUCING SUCH.

(51) International classification	:C12N0015820000, A61K0031070000, C12P0023000000, A61K0031592000, C07C0403240000
(31) Priority Document No	:NA
(32) Priority Date	:NA
(33) Name of priority country	:NA
(86) International Application No	:NA
Filing Date	:NA
(87) International Publication No	: NA
(61) Patent of Addition to Application Number	:NA
Filing Date	:NA
(62) Divisional to Application Number	:NA
Filing Date	:NA

(71)**Name of Applicant :**
1)NATIONAL AGRI-FOOD BIOTECHNOLOGY INSTITUTE (NABI)
Address of Applicant :NATIONAL AGRI-FOOD BIOTECHNOLOGY INSTITUTE (NABI) (AN AUTONOMOUS INSTITUTE OF DEPARTMENT OF BIOTECHNOLOGY, GOVT. OF INDIA), SECTOR 81, KNOWLEDGE CITY, S.A.S. NAGAR, MOHALI 140306, PUNJAB (INDIA). Punjab India
(72)**Name of Inventor :**
1)SIDDHARTH TIWARI
2)NAVNEET KAUR

(57) Abstract :
Vitamin A deficiency (VAD) is a leading cause of preventable blindness, growth retardation and lowered resistance to infections. Currently, pharmaceutical supplementation has been implemented to alleviate VAD. However, the risk of toxicity is associated with high-dose vitamin A supplementation. Biofortification of staple crops is a feasible and cost-effective means of delivering micronutrients to the population. Banana plays an important role towards food security in the world. India is ranked first with the current yearly production about 30.47 million metric tons (http://www.fao.org/faostat/en/#data/QC). Banana is least genetically improved relative to other major crops due to its complex genetic makeup. The conventional breeding for genetic improvement in banana is difficult due to the ploidy level and nature of parthenocarpic fruit development. Thus, we aimed at enhancing the provitamin A content in banana via genetic engineering approach. The present invention is related to biofortify banana with provitamin A carotenoids. We examined the first enzyme of methylerythritol phosphate (MEP) pathway, 1-deoxyxylulose 5-phosphate synthase (DXS) as a metabolic substrate flux provider for carotenoid biosynthesis. After screening banana cultivars, Nendran and Rasthali were identified as contrasting cultivars for high and low carotenoid content, respectively. After isolation, cloning and complementation assay of DXS homologs from Nendran, NEN-DXS2 gene was identified as candidate gene. We overexpressed NEN-DXS2 gene under Maize ubiquitin (ZmUbi) promoter with kanamycin selection in cultivars Grand Naine and Rasthali using Agrobacterium-mediated transformation. The transformed plants were grown under containment facility. The banana cultivars, Grand Naine and Rasthali events with up to = 30-fold enhanced provitamin A content in ripe fruit-pulp was devloped with respect to non-transformed control. These events can be used for VAD eradication by complementing the available provitamin A resources.

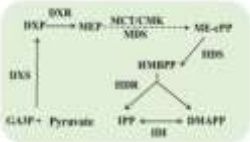

No. of Pages : 23 No. of Claims : 7

(12) PATENT APPLICATION PUBLICATION
(19) INDIA
(22) Date of filing of Application :28/12/2019
(21) Application No.201911054353 A
(43) Publication Date : 02/07/2021

(54) Title of the invention : CONTROLLED-RELEASE FLUVASTATIN MICROSPHERES BY RESPONSE SURFACE METHODOLOGY •

(51) International classification	:A61K0009160000, A61K0009500000, A61K0031600000, B32B0003260000, B41M0005500000	(71)**Name of Applicant :** **1)Chitkara Innovation Incubator Foundation** Address of Applicant :SCO: 160-161, Sector -9c, Madhya Marg, Chandigarh- 160009, India. Chandigarh India
(31) Priority Document No	:NA	(72)**Name of Inventor :** **1)SHARMA, Neelam**
(32) Priority Date	:NA	**2)SINGH, Sukhbir**
(33) Name of priority country	:NA	**3)ARORA, Sandeep**
(86) International Application No	:NA	
Filing Date	:NA	
(87) International Publication No	: NA	
(61) Patent of Addition to Application Number	:NA	
Filing Date	:NA	
(62) Divisional to Application Number	:NA	
Filing Date	:NA	

(57) Abstract :
The present invention relates to controlled-release microsphere composition comprising fluvastatin or a salt thereof having a bilayer shell structure comprising an outer polymer layer and an inner layer, and a core comprising the fluvastatin or a salt thereof, wherein the microspheres have a mean size diameter in a range from 100 um to 500 um; and wherein, the drug to polymer ratio is in the range of 1:1 to 1:5. The present invention also relates to optimization of the process for preparation of controlled-release microsphere by response surface methodology such that high entrapment efficiency and high yield of the microspheres is obtained.

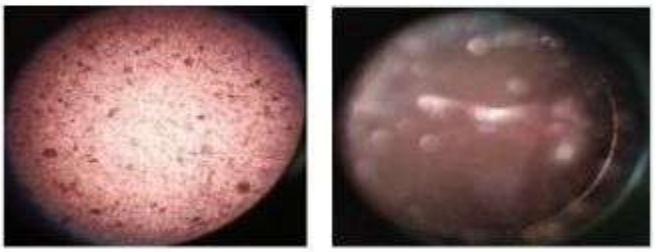

FIGURE 1

No. of Pages : 30 No. of Claims : 16

(12) PATENT APPLICATION PUBLICATION
(21) Application No.201911054413 A
(19) INDIA
(22) Date of filing of Application :30/12/2019
(43) Publication Date : 02/07/2021

(54) Title of the invention : BASEMENT DISTRIBUTION BOX

(51) International classification	:G02B0006440000, G02B0006380000, H02G0003080000, F02B0075220000, H02B0001440000	(71)**Name of Applicant :** **1)Sterlite Technologies Limited** Address of Applicant :House No. IFFCO Tower, 3rd Floor, Plot No.3, Street Sector 29 City Gurgaon State Haryana Country India Pin code 122002 Haryana India
(31) Priority Document No	:NA	(72)**Name of Inventor :**
(32) Priority Date	:NA	**1)Keerthi Lingarajappa**
(33) Name of priority country	:NA	
(86) International Application No	:NA	
Filing Date	:NA	
(87) International Publication No	: NA	
(61) Patent of Addition to Application Number	:NA	
Filing Date	:NA	
(62) Divisional to Application Number	:NA	
Filing Date	:NA	

(57) Abstract :
The present disclosure relates to a basement distribution box (100) for indoor and outdoor installation. The basement distribution box (100) includes a separable universal door (102). The basement distribution box (100) includes an intermediate structure (106). The separable universal door (102) is attached on a front portion of the basement distribution box (100). In addition, the separable universal door (102) is levered at the front portion of the basement distribution box (100) using a hinge mechanism. Further, the separable universal door (102) is equipped with main lock (104a). The intermediate structure (106) is positioned at an inside portion of the basement distribution box (100). In addition, the intermediate structure (106) includes one or more fibre optic adapter assemblies and an optical fibre cable coil on a front side of the intermediate structure (106). Further, the intermediate structure (106) includes a first panel (108).

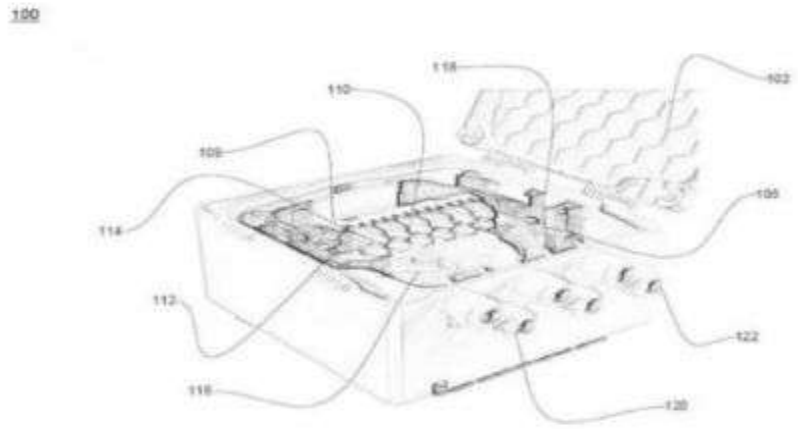

No. of Pages : 35 No. of Claims : 12

(12) PATENT APPLICATION PUBLICATION
(21) Application No.201911054418 A
(19) INDIA
(22) Date of filing of Application :30/12/2019
(43) Publication Date : 02/07/2021

(54) Title of the invention : ROBOTIC SYSTEM FOR DEPLOYING OPTICAL NETWORK COMPONENTS

(51) International classification	:B25J0009160000, A61B0034100000, G06F0017270000, B60T0008171000, A61B0090000000	(71)**Name of Applicant :** **1)Sterlite Technologies Limited** Address of Applicant :IFFCO Tower, 3rd Floor, Plot No.3, Sector 29 Gurgaon Haryana India 122002 Haryana India
(31) Priority Document No	:NA	(72)**Name of Inventor :** **1)Keerthi Lingarajappa** **2)Himanshu Kumar**
(32) Priority Date	:NA	
(33) Name of priority country	:NA	
(86) International Application No	:NA	
Filing Date	:NA	
(87) International Publication No	: NA	
(61) Patent of Addition to Application Number	:NA	
Filing Date	:NA	
(62) Divisional to Application Number	:NA	
Filing Date	:NA	

(57) Abstract :
ABSTRACT ROBOTIC SYSTEM FOR DEPLOYING OPTICAL NETWORK COMPONENTS The present disclosure provides a robotic system (108). The robotic system (108) performs a method to deploy optical network components in a facility using the robotic system (108). The method includes a first step to receive an input command. In addition, the method includes a second step to capture one or more images of congested areas using a camera (110). Further, the method includes a third step to analyze congested areas in the facility. Furthermore, the method includes a fourth step to calculate cable route information of congested areas. Moreover, the method includes a fifth step to transmit cable route information and the one or more images of congested areas to an operator (102). Also, the one or more images of congested areas are captured to analyze congested areas in the facility. Also, congested areas are analyzed with facilitation of an artificial intelligence-based engine. FIG. 1

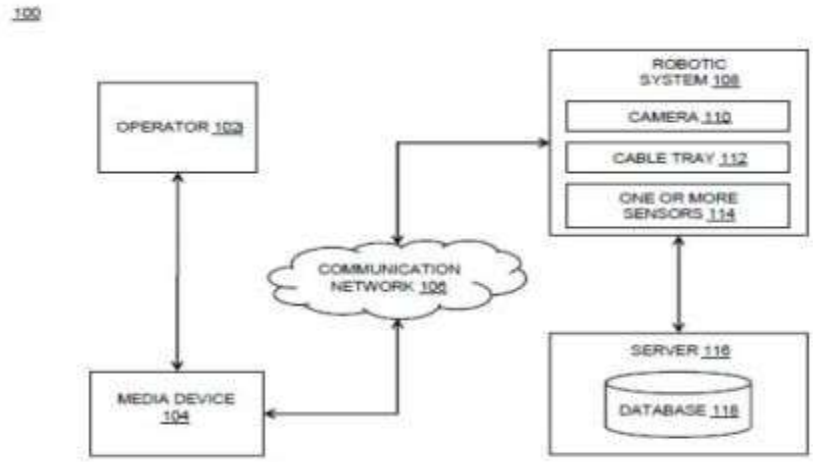

No. of Pages : 26 No. of Claims : 10

(12) PATENT APPLICATION PUBLICATION
(19) INDIA
(22) Date of filing of Application :30/12/2019
(21) Application No.201911054425 A
(43) Publication Date : 02/07/2021

(54) Title of the invention : BINDER FREE NIFE2O4 CATHODE AND METHOD OF FABRICATING ASYMMETRIC HYBRID SUPERCAPACITOR DEVICE BASED ON SAID CATHODE AND ACTIVATED CARBON ANODE

(51) International classification	:H04L0029080000, C07D0417140000, C07D0417060000, C07D0263320000, G03G0015000000
(31) Priority Document No	:NA
(32) Priority Date	:NA
(33) Name of priority country	:NA
(86) International Application No	:NA
Filing Date	:NA
(87) International Publication No	: NA
(61) Patent of Addition to Application Number	:NA
Filing Date	:NA
(62) Divisional to Application Number	:NA
Filing Date	:NA

(71)**Name of Applicant :**
1)Chairman, Defence Research and Development Organisation
Address of Applicant :Ministry of Defence, Govt. of India, Room No. 348, B-Wing, DRDO Bhawan, Rajaji Marg, New Delhi 110 011, India Delhi India
(72)**Name of Inventor :**
1)MORDINA, BABLU
2)KUMAR, RUDRA
3)NEERAJ, NAGENDRA SINGH
4)SRIVASTAVA, ALOK KUMAR
5)SETUA, DIPAK KUMAR
6)SHARMA, ASHUTOSH
7)PRASAD, NAMBURI ESWARA

(57) Abstract :
A binder free cathode comprising NiFe204 nanoparticles and conductive Ni-foam substrate, wherein said NiFe204 nanoparticles are attached directly over the conductive Ni-foam substrate without using any polymeric binder.

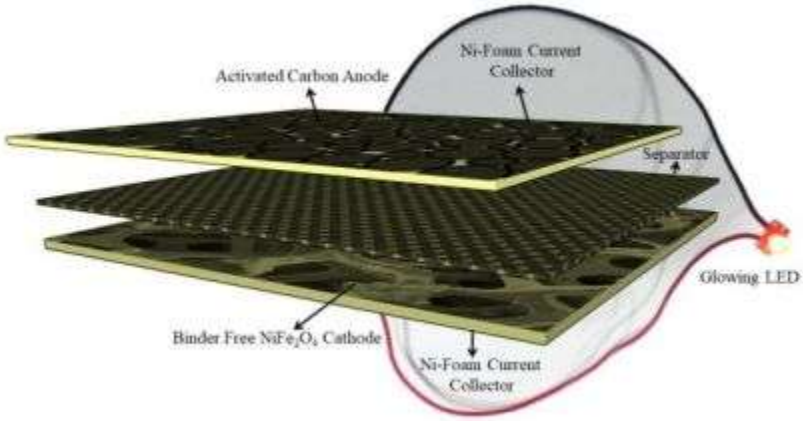

No. of Pages : 38 No. of Claims : 15

(12) PATENT APPLICATION PUBLICATION
(19) INDIA
(22) Date of filing of Application :30/12/2019

(21) Application No.201911054427 A
(43) Publication Date : 02/07/2021

(54) Title of the invention : STATIONARY FRICTION PROCESSING PROCESS OF THERMAL SPRAY COATING FOR DRAMATICALLY ENHANCING ITS EROSION AND EROSION-CORROSION RESISTANCE •

(51) International classification	:H04L0029080000, C07D0417140000, C07D0417060000, C07D0263320000, G03G0015000000	(71)**Name of Applicant :** **1)Chairman, Defence Research & Development Organisation** Address of Applicant :Ministry of Defence, Govt of India, Room No-348, B-Wing, DRDO Bhawan, Rajaji Marg, New Delhi - 110011, India, Delhi India
(31) Priority Document No	:NA	
(32) Priority Date	:NA	
(33) Name of priority country	:NA	
(86) International Application No	:NA	
Filing Date	:NA	
(87) International Publication No	: NA	
(61) Patent of Addition to Application Number	:NA	
Filing Date	:NA	
(62) Divisional to Application Number	:NA	
Filing Date	:NA	

(72)**Name of Inventor :**
1)Singh, Harpreet
2)Grewal, Harpreet Singh
3)Roy, Manish
4)Singh, Harpreet
5)Rani, Manjeet

(57) Abstract :
A process for post-processing of thermal spray coating deposited on metallic material, comprising the steps of rotating a cylindrical tool which is fixed in the vertical milling machine, on thermal spray coated metallic material at a rotational speed in the range of 350-400 rpm for a period in the range of 5-10 min to obtain the post processed thermal spray coating.

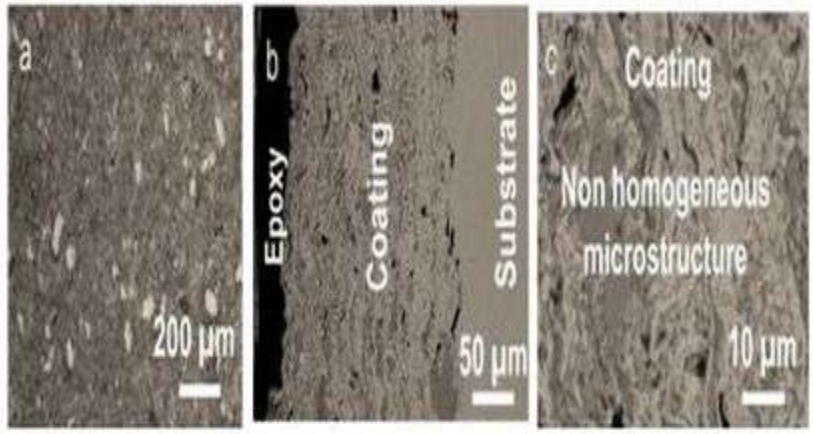

No. of Pages : 19 No. of Claims : 10

(12) PATENT APPLICATION PUBLICATION
(19) INDIA
(22) Date of filing of Application :30/12/2019

(21) Application No.201911054438 A
(43) Publication Date : 02/07/2021

(54) Title of the invention : UNIVERSALLY MOUNTABLE FIBER OPTIC SPLICE AND DISTRIBUTION ENCLOSURE

(51) International classification	:G02B0006440000, H02G0015013000, H02G0015113000, H02G0015117000, H02G0015007000	(71)**Name of Applicant :** **1)Sterlite Technologies Limited** Address of Applicant :House No. IFFCO Tower, 3rd Floor, Plot No.3, Street Sector 29 City Gurgaon State Haryana Country India Pin code 122002 Haryana India
(31) Priority Document No	:NA	(72)**Name of Inventor :**
(32) Priority Date	:NA	**1)Keerthi Lingarajappa**
(33) Name of priority country	:NA	**2)Himanshu Kumar**
(86) International Application No	:NA	**3)Shanta Kumar**
Filing Date	:NA	
(87) International Publication No	: NA	
(61) Patent of Addition to Application Number	:NA	
Filing Date	:NA	
(62) Divisional to Application Number	:NA	
Filing Date	:NA	

(57) Abstract :
The present disclosure relates to an optic cable closure (100) for enclosing splice and splitter connections. The optic cable closure (100) includes a first panel (102), a housing (104), a first plurality of temporary joint slots (106a-h), a second plurality of temporary joint slots (llOa-h), a plurality of cable holders (112a-d) and a wall mounting bracket (114). In addition, the first panel (102) includes a first side (102a), a second side (102b), a third side (102c) and a fourth side (102d). Further, the first panel (102) facilitates access to interior of the housing (104) of the optic cable closure (100). Furthermore, the housing (104) includes a first face (108a), a second face (108b), a third face (108c) and a fourth face (108d).

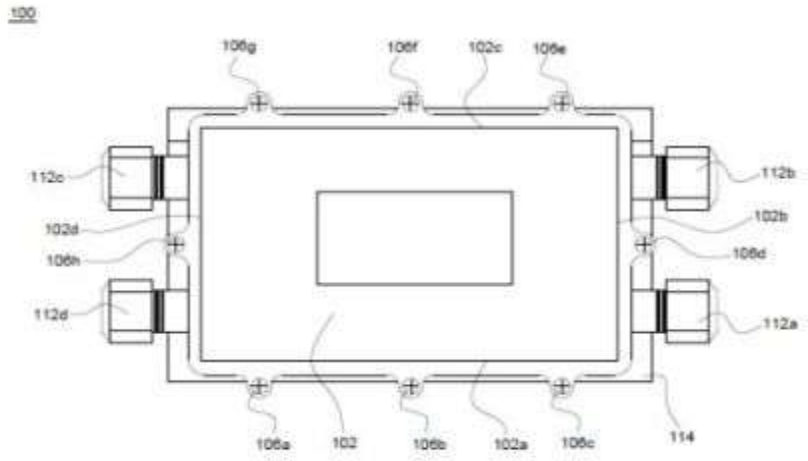

No. of Pages : 50 No. of Claims : 17

(12) PATENT APPLICATION PUBLICATION
(21) Application No.201911054464 A
(19) INDIA
(22) Date of filing of Application :30/12/2019
(43) Publication Date : 02/07/2021

(54) Title of the invention : METHOD FOR MAKING BALE USING AN AUTONOMOUS BALER

(51) International classification	:A01F0015070000, A01F0015080000, B65B0063020000, F16L0055165000, C08J0011160000	(71)**Name of Applicant :** **1)Shiv Nadar University** Address of Applicant :NH91, Tehsil Dadri, Gautam Buddha Nagar, Uttar Pradesh 201314, India. Uttar Pradesh India
(31) Priority Document No	:NA	(72)**Name of Inventor :** **1)Dr. Ankit Gupta**
(32) Priority Date	:NA	**2)Rakesh Rayapuredddi**
(33) Name of priority country	:NA	**3)Venkata Amith**
(86) International Application No	:NA	
Filing Date	:NA	
(87) International Publication No	: NA	
(61) Patent of Addition to Application Number	:NA	
Filing Date	:NA	
(62) Divisional to Application Number	:NA	
Filing Date	:NA	

(57) Abstract :
The present invention relates to method for making bale (B) using an autonomous baler (100), comprising the steps of: entering stubble to a chamber (103) consisting of conveyer belts (104), a plurality of inner rollers (1), and a plurality of bigger rollers (3) that creates a completely closed space; providing the fast-rotating motion of conveyor belts (104), the plurality of bigger rollers (3), and a plurality of inner rollers (1) that provides pressure to hold the bale (B) in tight, a plurality of linear actuators (2) that helps additional length belt for increasing the bale diameter together helps the stubble to rotate and formation of initial cylindrical bale (B) at the same time being pressed between the conveyor belts (104); and sending signals to a door actuator to raise a door (112) when a sensor detecting the maximum diameter of bale (B) has formed.

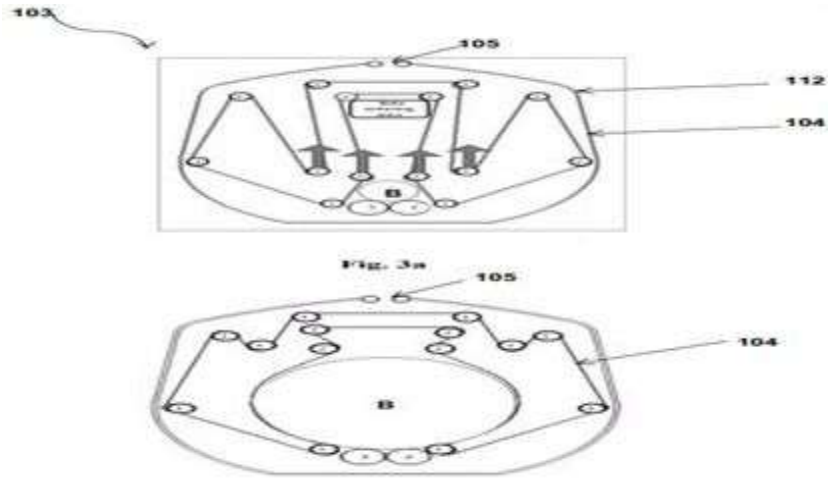

No. of Pages : 19 No. of Claims : 10

(12) PATENT APPLICATION PUBLICATION
(19) INDIA
(22) Date of filing of Application :30/12/2019

(21) Application No.201911054475 A
(43) Publication Date : 02/07/2021

(54) Title of the invention : CONTROL PANEL FOR TUNNEL TYPE-DE-DUSTING MACHINE

(51) International classification	:H04L0012460000, H04W0076120000, D06F0073020000, D06F0039000000, G08B0025140000	(71)**Name of Applicant :** **1)PROF. JOGINDER SINGH** Address of Applicant :GATEWAY COLLEGE OF ARCHITECTURE AND DESIGN, SONIPAT, HARYANA-131001, INDIA Haryana India
(31) Priority Document No	:NA	(72)**Name of Inventor :**
(32) Priority Date	:NA	**1)PROF. JOGINDER SINGH**
(33) Name of priority country	:NA	
(86) International Application No	:NA	
Filing Date	:NA	
(87) International Publication No	: NA	
(61) Patent of Addition to Application Number	:NA	
Filing Date	:NA	
(62) Divisional to Application Number	:NA	
Filing Date	:NA	

(57) Abstract :
A Panel to control a tunnel type de-dusting machine comprising various devices is disclosed herein. The invention describes a low cost controlling system with both automatic and manual mode. The control panel comprises a Wi-Fi enabled touch switches pad, current protection relay with display, voltage protection relay with display, drive display card, air pressure sensor with pitot tube, a retro reflective photoelectric sensor with one minute adjustable timer and trip Indicators.

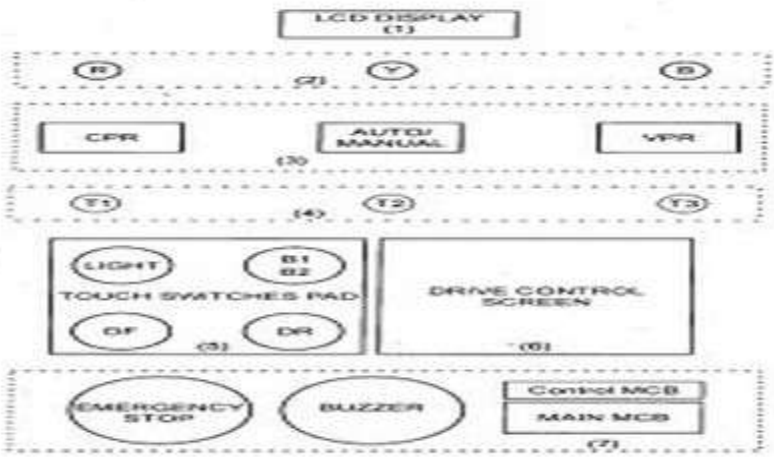

No. of Pages : 21 No. of Claims : 9

(12) PATENT APPLICATION PUBLICATION
(21) Application No.201911054478 A
(19) INDIA
(22) Date of filing of Application :30/12/2019
(43) Publication Date : 02/07/2021

(54) Title of the invention : ATTITUDE CONTROLLER FOR LUBRICATION SYSTEM OF AN AIRCRAFT ENGINE

(51) International classification	:F01M0013040000, F01D0025200000, F02B0061040000, F02M0021020000, F02C0007060000	(71)**Name of Applicant :** **1)Chairman, Defence Research & Development Organisation (DRDO)** Address of Applicant :Defence, Govt. of India, Room No. 348, B Wing, DRDO Bhawan, Rajaji Marg, New Delhi- 110011, India Delhi India
(31) Priority Document No	:NA	
(32) Priority Date	:NA	(72)**Name of Inventor :**
(33) Name of priority country	:NA	**1)Aditya Kumar Mishra**
(86) International Application No	:NA	**2)R K Mishra**
Filing Date	:NA	**3)Mathews P Samuel**
(87) International Publication No	: NA	**4)R Ragupathy**
(61) Patent of Addition to Application Number	:NA	**5)Prashant Kumar**
Filing Date	:NA	**6)C Jagadish Babu**
(62) Divisional to Application Number	:NA	
Filing Date	:NA	

(57) Abstract :
The present disclosure relates to an attitude controller (5) for the oil system of aircraft engine in which the oil tank has multiple inlet ports (2,3,4,5) with valves (45,46,47,48) and connected together prior to entry to existing elements of oil system beyond oil tank i.e. either breather line (1b) or pump line (1a). The attitude controller (5) provides external feedback and control mechanism to decide on which inlet will feed the oil. This attitude electronic controller senses the attitude of the aircraft and through an internal logic actuates the valve of inlet port that can provide oil at that attitude of aircraft. The inlet port also acts as input to the breather line in case oil is unavailable in that particular port.

Figure of Abstract

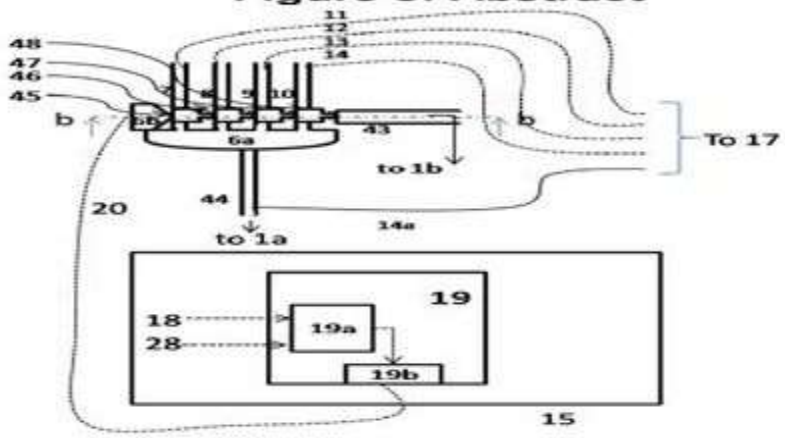

No. of Pages : 25 No. of Claims : 12

(12) PATENT APPLICATION PUBLICATION
(19) INDIA
(22) Date of filing of Application :30/12/2019
(21) Application No.201911054521 A
(43) Publication Date : 02/07/2021

(54) Title of the invention : PERSONAL CARE COMPOSITIONS

(51) International classification	:A61K0031580000, A61K0008360000, A61K0031327000, A01N0025160000, A61K0047380000
(31) Priority Document No	:NA
(32) Priority Date	:NA
(33) Name of priority country	:NA
(86) International Application No	:NA
Filing Date	:NA
(87) International Publication No	: NA
(61) Patent of Addition to Application Number	:NA
Filing Date	:NA
(62) Divisional to Application Number	:NA
Filing Date	:NA

(71)**Name of Applicant :**
1)Colgate-Palmolive Company
Address of Applicant :300 Park Avenue New York, New York 10022, U.S.A. U.S.A.
(72)**Name of Inventor :**
1)MALI, Nikhil
2)JADHAV, Purushottam

(57) Abstract :
Described herein is a powdered soap comprising a plurality of particles, each of the particles comprising: an ionic polymer; and a fatty component comprising compounds having Cg to Ci8 chains.

No. of Pages : 19 No. of Claims : 31

(12) PATENT APPLICATION PUBLICATION
(19) INDIA
(22) Date of filing of Application :30/12/2019
(21) Application No.201911054522 A
(43) Publication Date : 02/07/2021

(54) Title of the invention : PERSONAL CARE COMPOSITIONS

(51) International classification	:A23L0033115000, A61K0009500000, H01M0004640000, A61K0008020000, A61K0009120000
(31) Priority Document No	:NA
(32) Priority Date	:NA
(33) Name of priority country	:NA
(86) International Application No	:NA
Filing Date	:NA
(87) International Publication No	: NA
(61) Patent of Addition to Application Number	:NA
Filing Date	:NA
(62) Divisional to Application Number	:NA
Filing Date	:NA

(71)**Name of Applicant :**
1)Colgate-Palmolive Company
Address of Applicant :300 Park Avenue New York, New York 10022, U.S.A. U.S.A.
(72)**Name of Inventor :**
1)MALI, Nikhil
2)JADHAV, Purushottam

(57) Abstract :
Described herein is a powdered soap comprising a plurality of particles, each of the particles comprising a polyquat, a clay, and a fatty component.

No. of Pages : 20 No. of Claims : 55

(12) PATENT APPLICATION PUBLICATION
(19) INDIA
(22) Date of filing of Application :31/12/2019

(21) Application No.201911054630 A
(43) Publication Date : 02/07/2021

(54) Title of the invention : A WASHING MACHINE WITH VARIABLE SPEED OF ROTATION

(51) International classification	:F04B0049060000, D06F0037200000, D06F0033020000, D06F0037300000, D06F0035000000	(71)**Name of Applicant :** **1)LG ELECTRONICS INC.** Address of Applicant :20 Yeouido-dong, Yeongdeungpo-gu, Seoul 150-721, Republic of Korea Republic of Korea (72)**Name of Inventor :** **1)Mullapudi Pradeep**
(31) Priority Document No	:NA	
(32) Priority Date	:NA	
(33) Name of priority country	:NA	
(86) International Application No	:NA	
Filing Date	:NA	
(87) International Publication No	: NA	
(61) Patent of Addition to Application Number	:NA	
Filing Date	:NA	
(62) Divisional to Application Number	:NA	
Filing Date	:NA	

(57) Abstract :
A system (102) configured to vary speed of rotation of a drum associated with a washing machine 100 during at least one phase of an ongoing cycle is provided. The system (102) includes at least one sensor module (104) configured to capture a first value of current consumed by the washing machine (10 0) during rotation of the drum in the at least one phase of the ongoing cycle. The system (102) also includes at least one controller (106) configured to analyze the first value of current with respect to a pre-defined value of current to be consumed by the washing machine (10 0) during rotation of the drum in the at least one phase of the ongoing cycle by artificial intelligence. Further, the at least one controller (106) varies the speed of rotation of the drum based on the analysis of the first value of current.

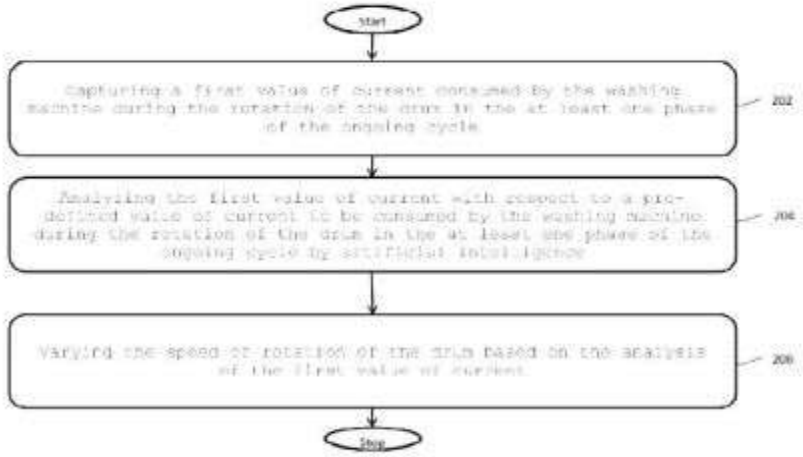

No. of Pages : 36 No. of Claims : 36

(12) PATENT APPLICATION PUBLICATION
(21) Application No.201911054654 A
(19) INDIA
(22) Date of filing of Application :31/12/2019
(43) Publication Date : 02/07/2021

(54) Title of the invention : A SYSTEM AND METHOD FOR WEB-GIS (GEOGRAPHIC INFORMATION SYSTEM) POWERED SHAPEFILE-BASED SURVEY

(51) International classification	:G06F0016290000, G01C0015000000, G06Q0030020000, G01C0015060000, G06F0016953700	(71)**Name of Applicant :** **1)ANTEF TECHNOLOGIES PRIVATE LIMITED** Address of Applicant :B-2448, 4-F KAILASH NAGER, FAZILKA, PUNJAB - 152123, INDIA Punjab India
(31) Priority Document No	:NA	(72)**Name of Inventor :**
(32) Priority Date	:NA	**1)ARSH DODA**
(33) Name of priority country	:NA	
(86) International Application No	:NA	
Filing Date	:NA	
(87) International Publication No	: NA	
(61) Patent of Addition to Application Number	:NA	
Filing Date	:NA	
(62) Divisional to Application Number	:NA	
Filing Date	:NA	

(57) Abstract :
The present invention discloses a system and method for geographic information system (GIS) based survey, wherein user designs the survey form on the GIS web application and distribute the form within the team from the web application to the surveyor. The users then assign areas to the surveyors for conducting surveys. The surveyor need to go to the assigned survey area and fills the form directly on the GIS data. The surveyor can create/edit the GIS data directly on the mobile GIS app. The web application automatically compiles the data into the shapefile attributes, so the user can download the data with multiple format options.

No. of Pages : 23 No. of Claims : 15

(12) PATENT APPLICATION PUBLICATION
(19) INDIA
(22) Date of filing of Application :31/12/2019

(21) Application No.201911054676 A
(43) Publication Date : 02/07/2021

(54) Title of the invention : ELECTROMAGNETIC INDUCTION BASED STORAGE WATER GEYSER

(51) International classification	:B64G0001360000, H04N0021274300, G09B0005140000, G10L0021100000, G05B0019042000	(71)**Name of Applicant :** **1)Addon Research and Innovation Labs** Address of Applicant :2241/7 HC Sen Road Chandni Chowk Delhi-110006, India Delhi India (72)**Name of Inventor :** **1)Ammar Zamir** **2)Talha Zamir**
(31) Priority Document No	:NA	
(32) Priority Date	:NA	
(33) Name of priority country	:NA	
(86) International Application No	:NA	
Filing Date	:NA	
(87) International Publication No	: NA	
(61) Patent of Addition to Application Number	:NA	
Filing Date	:NA	
(62) Divisional to Application Number	:NA	
Filing Date	:NA	

(57) Abstract :
A storage water geyser (200) is provided. The geyser (200) comprises a set of thermostats (13) configured to trigger a first command for energizing an induction coil (5) for inducing a magnetic flux. Further, the storage water geyser (200) comprises a storage tank (9) configured to receive the magnetic flux repeatedly for magnetizing the storage tank (9) . The magnetization produces eddy currents in the storage tank (9) resulting in heat generation in the storage tank (9) for heating the water in the storage tank (9).

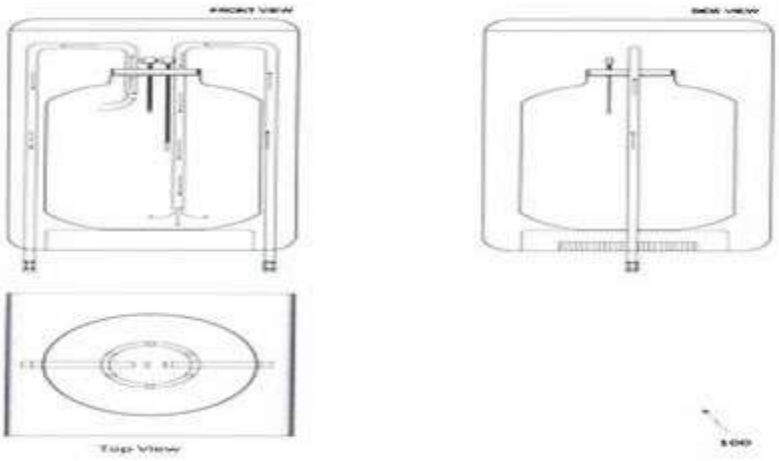

No. of Pages : 28 No. of Claims : 10

(12) PATENT APPLICATION PUBLICATION
(19) INDIA
(22) Date of filing of Application :31/12/2019

(21) Application No.201911054710 A
(43) Publication Date : 02/07/2021

(54) Title of the invention : SYSTEM FOR WATER EXTRACTION FROM AIR.

(51) International classification	:B01D0053260000, E03B0003280000, B01D0005000000, G05D0023240000, H01F0027220000	(71)**Name of Applicant :** **1)CHAIRMAN, DEFENCE RESEARCH & DEVELOPMENT ORGANISATION** Address of Applicant :Ministry of Defence, Govt. of India, Room No. 348, B-Wing, DRDO Bhawan Rajaji Marg, New Delhi, India. PIN-110011 Delhi India
(31) Priority Document No	:NA	(72)**Name of Inventor :** **1)Daya Lama** **2)Sanjai Kumar Dwivedi**
(32) Priority Date	:NA	
(33) Name of priority country	:NA	
(86) International Application No	:NA	
Filing Date	:NA	
(87) International Publication No	: NA	
(61) Patent of Addition to Application Number	:NA	
Filing Date	:NA	
(62) Divisional to Application Number	:NA	
Filing Date	:NA	

(57) Abstract :
A system to extract water from atmospheric air is provided. The assembly includes heat extraction chamber, chamber for housing equipment for circulation and compression of fluid, an air fan, a temperature controller, a water outlet duct, a water container, support for fixing heat dissipating equipment, covers for chambers, heat extraction equipment, heat dissipating equipment and expansion valve. Heat extraction equipment comprises of copper tube in coil form and heat dissipating equipment comprising of steel wire and tube. Fluid for heat absorption and transfer comprises of R134a, hydro fluorocarbon refrigerant. Expansion valve regulates the flow of refrigerant into copper coil, heat gained from air through copper coil is transpired by evaporation of refrigerant in copper coil, compressor increases the pressure and corresponding boiling point of refrigerant vapour to facilitate heat dissipation by equipment to surrounding, heat transfer through heat dissipating equipment occurs in tubes of heat dissipating equipment.

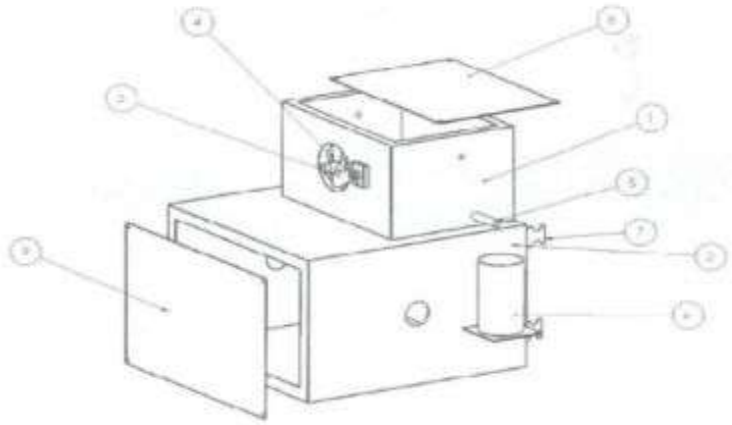

No. of Pages : 21 No. of Claims : 12

(12) PATENT APPLICATION PUBLICATION
(21) Application No.201911054749 A
(19) INDIA
(22) Date of filing of Application :31/12/2019
(43) Publication Date : 02/07/2021

(54) Title of the invention : AUTOMATIC WATER HARVESTING AND RECYLING SYSTEM

(51) International classification	:E03B0003030000, E04D0013000000, E04D0013040000, E04H0001120000, A01G0027000000	(71)**Name of Applicant :** **1)Chandigarh University** Address of Applicant :National Highway 95, Chandigarh-Ludhiana Highway, Mohali, Punjab - 140413, India. Punjab India (72)**Name of Inventor :** **1)Aman Upadhyay**
(31) Priority Document No	:NA	
(32) Priority Date	:NA	
(33) Name of priority country	:NA	
(86) International Application No	:NA	
Filing Date	:NA	
(87) International Publication No	: NA	
(61) Patent of Addition to Application Number	:NA	
Filing Date	:NA	
(62) Divisional to Application Number	:NA	
Filing Date	:NA	

(57) Abstract :
The present invention relates to an automatic water harvesting and recycling system 1, comprises: multiple solar panels 3 attached on a rooftop that coverts the absorbed solar energy into electrical energy, curved portions 2 attached on two end of the roof that allows the passage of rain water inside a pipe, wherein the curved portion increases amount of water entering inside the vents 4, a heating unit attached at internal portion of the pipe that kills the pathogen present inside the rain water by using electrical energy generated by the solar panels, a filtering unit attached to the heating unit that removes unwanted impurities away from the boiled water, and a storage unit attached to the pipe that reserves the filtered rain water.

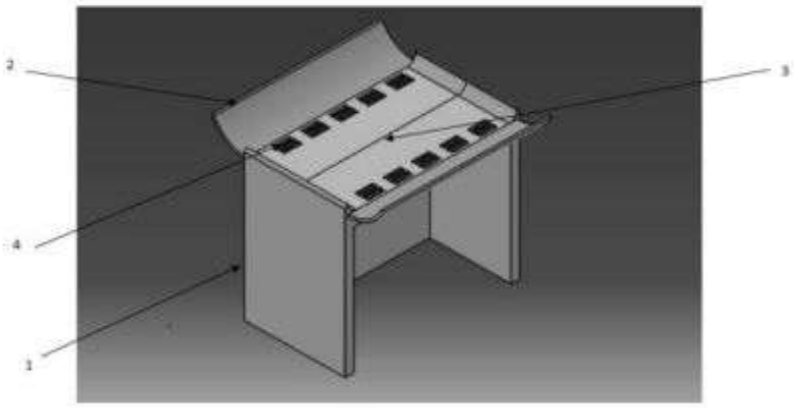

Figure 1

No. of Pages : 9 No. of Claims : 4

(12) PATENT APPLICATION PUBLICATION
(19) INDIA
(22) Date of filing of Application :31/12/2019

(21) Application No.201911054759 A
(43) Publication Date : 02/07/2021

(54) Title of the invention : AUTOMATED AGRICULTURE CROP PROTECTION SYSTEM

(51) International classification	:G08B0017100000, B60L0003000000, B60L0003040000, G08B0003100000, G06Q0010040000	(71)**Name of Applicant :** **1)Chandigarh University** Address of Applicant :National Highway 95, Chandigarh-Ludhiana Highway, Mohali, Punjab 140413, India. Punjab India
(31) Priority Document No	:NA	(72)**Name of Inventor :**
(32) Priority Date	:NA	**1)Pardeep Kumar**
(33) Name of priority country	:NA	**2)Dr. Inderpreet Kaur**
(86) International Application No	:NA	
Filing Date	:NA	
(87) International Publication No	: NA	
(61) Patent of Addition to Application Number	:NA	
Filing Date	:NA	
(62) Divisional to Application Number	:NA	
Filing Date	:NA	

(57) Abstract :
The present invention relates to a frame consisting multiple of poles 4 vertically fixed on a field 5 and multiple of rod 2 joined with the poles 4, multiple of sensors 1 for detecting smoke while burning of crops, two motor 3, 6 fixed on two corner to move the motor 3, 6 from one corner to another, a GPS module for detecting a location of the field 5, a controller for generating command signal and alert signal upon detection of the smoke and location, a communication module that transfers alert signal with location to authorized person, a buzzer for providing sound alert, a relay for turning ON/OFF a tube well upon receiving the command signal, multiple of sprinklers 8 for discharging water on the crops and electrical source for providing electrical energy to the system.

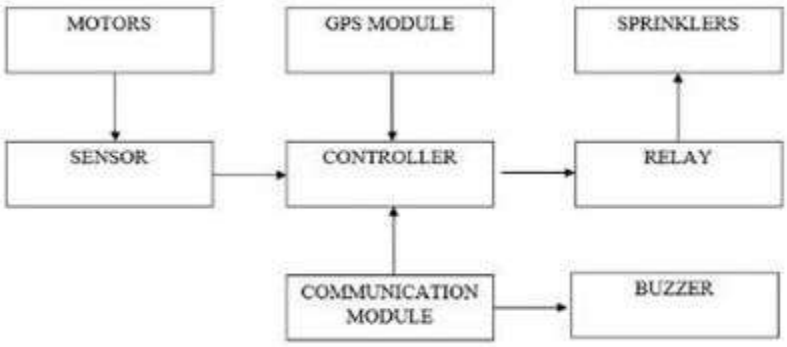

Figure 1.

No. of Pages : 12 No. of Claims : 10

(12) PATENT APPLICATION PUBLICATION
(19) INDIA
(22) Date of filing of Application :31/12/2019

(21) Application No.201911054760 A
(43) Publication Date : 02/07/2021

(54) Title of the invention : WEIGHT LIFTING DEVICE

(51) International classification	:H01H0001200000, G01R0031280000, B67D0001000000, H01H0073040000, G02B0027000000	(71)**Name of Applicant :** **1)Chandigarh University** Address of Applicant :National Highway 95, Chandigarh-Ludhiana Highway, Mohali, Punjab - 140413, India. Punjab India
(31) Priority Document No	:NA	(72)**Name of Inventor :** **1)Kiran Jot Singh**
(32) Priority Date	:NA	**2)Geet Arora**
(33) Name of priority country	:NA	**3)Khushal Thakur**
(86) International Application No	:NA	**4)Anshul Sharma**
Filing Date	:NA	**5)Divneet Singh Kapoor**
(87) International Publication No	: NA	
(61) Patent of Addition to Application Number	:NA	
Filing Date	:NA	
(62) Divisional to Application Number	:NA	
Filing Date	:NA	

(57) Abstract :
The present invention relates to a weight lifting device, comprising a rod 1 having at least two fixed 2 and two movable blocks 3, a first set of springs 4 are positioned, the movable blocks come in contact with multiple weight(s) that are put on the rod 1, a frame 5 connected to the rod 1 via a second set of springs 6,the frame 5 is equipped with at least two buttons 8 which are pressed by the user to compress the second set of springs 6, expand the first set of springs 4 and move the frame 5 in a predefined direction, expanding of the first set of springs 4 pushes the movable blocks 3 and at least two bars 7 hinged with the frame 5 and the fixed blocks 2 and the bars 7 move along with the frame 5.

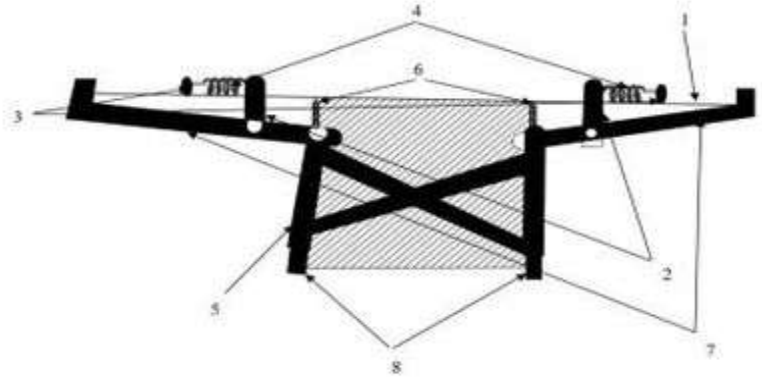

No. of Pages : 10 No. of Claims : 7

(12) PATENT APPLICATION PUBLICATION
(21) Application No.201911054764 A
(19) INDIA
(22) Date of filing of Application :31/12/2019
(43) Publication Date : 02/07/2021

(54) Title of the invention : STABILITY SYSTEM FOR SPACECRAFTS

(51) International classification	:B64G0001280000, B64G0001360000, E05F0015000000, G05B0019042000, A61B0017000000	(71)**Name of Applicant :** **1)Chandigarh University** Address of Applicant :National Highway 95, Chandigarh-Ludhiana Highway, Mohali, Punjab 140413, India. Punjab India (72)**Name of Inventor :** **1)Gagandeep Singh Mavi** **2)Akash Tiwary**
(31) Priority Document No	:NA	
(32) Priority Date	:NA	
(33) Name of priority country	:NA	
(86) International Application No	:NA	
Filing Date	:NA	
(87) International Publication No	: NA	
(61) Patent of Addition to Application Number	:NA	
Filing Date	:NA	
(62) Divisional to Application Number	:NA	
Filing Date	:NA	

(57) Abstract :
The present invention relates to a stability system for spacecrafts, comprising a gravity sensor 2 attached to a spacecraft 1 for detecting changes in the gravity, a gyroscope sensor 3 associated to the spacecraft 1 detects changes in angular-movements, a control unit connected to the sensors 2, 3 for generating command signal, a fluid container 4 interconnected to the sensors 2, 3 that provides fluid to the system through closing and opening of a valve, a compressor unit 5 connected to the container 4 for increasing fluid pressure by compressing the fluid, a hydraulic arm 6 coupled to the control unit that expands in accordance to the command signals for providing soft landing to the spacecraft 1, a stand 8 attached to the arm for positioning the arm 6 on a stellar surface and multiple nozzles 9 associated to the stand 8 provides a passage for releasing the fluid.

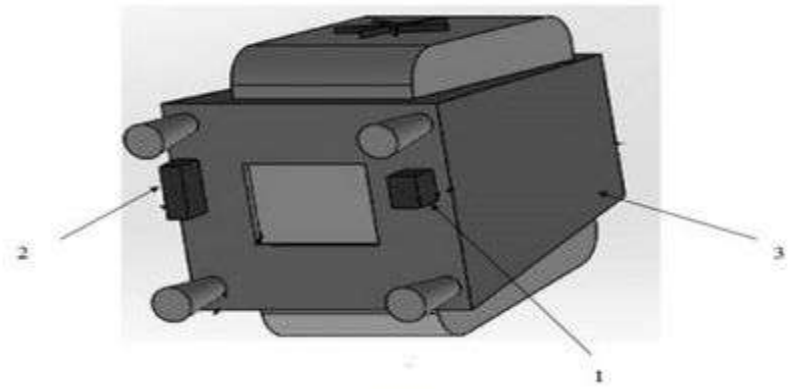

Figure 1

No. of Pages : 11 No. of Claims : 6

(12) PATENT APPLICATION PUBLICATION
(19) INDIA
(22) Date of filing of Application :31/12/2019

(21) Application No.201911054766 A
(43) Publication Date : 02/07/2021

(54) Title of the invention : TRAIN COLLISION PREVENTION SYSTEM

(51) International classification	:A61B0005010000, H04N0005330000, G01N0025720000, B61L0015000000, G01J0005000000	(71)**Name of Applicant :** **1)Chandigarh University** Address of Applicant :National Highway 95, Chandigarh-Ludhiana Highway, Mohali, Punjab - 140413, India. Punjab India
(31) Priority Document No	:NA	(72)**Name of Inventor :** **1)Sahil Dogra**
(32) Priority Date	:NA	**2)Akash Tiwary**
(33) Name of priority country	:NA	**3)Ashutosh Raj**
(86) International Application No	:NA	
Filing Date	:NA	
(87) International Publication No	: NA	
(61) Patent of Addition to Application Number	:NA	
Filing Date	:NA	
(62) Divisional to Application Number	:NA	
Filing Date	:NA	

(57) Abstract :
The present invention relates to a train collision prevention system, comprises: multiple poles 4 attached at a railroad that delivers the electrical power to a locomotive, a group of sensors 1 mounted on the poles that senses out the thermal image of an upcoming object by rotating at 360 degree angle, multiple recievers 3 attached at the railroad that catches out the thermal signal from the sensors, a scanner 2 attached at a locomotive body of the train that receives and transports the thermal data to a control unit, the control unit installed in the system that produces out the thermal data, and a display unit 6 attached in the locomotive body that displays the thermal images.

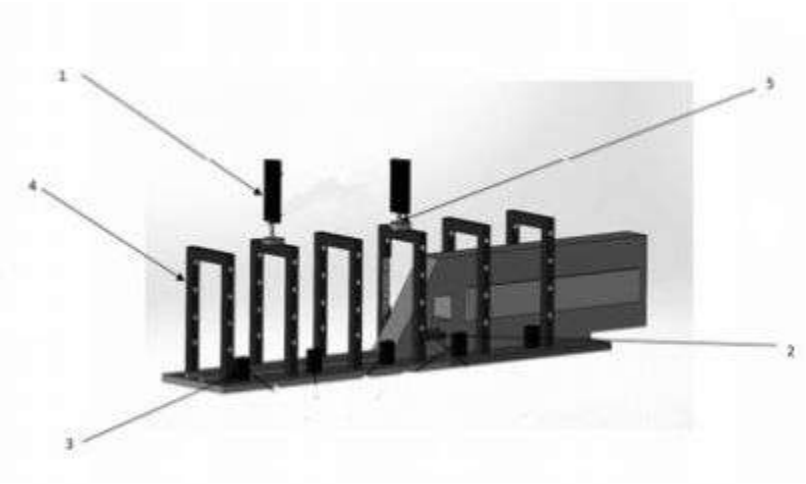

No. of Pages : 12 No. of Claims : 6

(12) PATENT APPLICATION PUBLICATION
(21) Application No.201911054797 A
(19) INDIA
(22) Date of filing of Application :31/12/2019
(43) Publication Date : 02/07/2021

(54) Title of the invention : ANTI-OXIDANT PHYTOCHEMICAL COMPOSITION OF T.BISPINOSA AND METHOD OF ISOLATION THEREOF

(51) International classification	:A23L0033105000, A61K0036185000, A61K0008970000, A61K0036752000, C07C0051480000	(71)**Name of Applicant :** **1)Noida Institute of Engineering & Technology (Pharmacy Institute)** Address of Applicant :Plot No. - 19, Knowledge Park- 2, Institutional Area, Greater Noida, Uttar Pradesh-201306, India. Uttar Pradesh India
(31) Priority Document No	:NA	
(32) Priority Date	:NA	(72)**Name of Inventor :**
(33) Name of priority country	:NA	**1)Dr Rupa Mazumder**
(86) International Application No	:NA	**2)Chandana Majee**
Filing Date	:NA	**3)Dr. Avijit Mazumder**
(87) International Publication No	: NA	
(61) Patent of Addition to Application Number	:NA	
Filing Date	:NA	
(62) Divisional to Application Number	:NA	
Filing Date	:NA	

(57) Abstract :
The present invention relates to an anti-oxidant phytochemical composition of T.bispinosa comprising i) T.bispinosa leaves in the range of 40-50% w/w, ii) T.bispinosa fruits in the range of 45-55% w/w, and iii) an extraction solvent in the range of 1-5% v/v. A method of isolation of the composition comprising the following steps: i) collecting plant materials (leaves and fruit peels) of the T.bispinosa to carry out extraction; ii) shade drying said materials in at room temperature to obtain dried materials; iii) blending said dried materials followed by filtering through sieve no.20 to obtain powdered materials; iv) extracting said powdered material by using said methanol at 70°C for a period of 72 hours to obtain extract solvent; v) evaporating said solvent of the extract under reduced pressure to obtain pure methanolic extract materials.

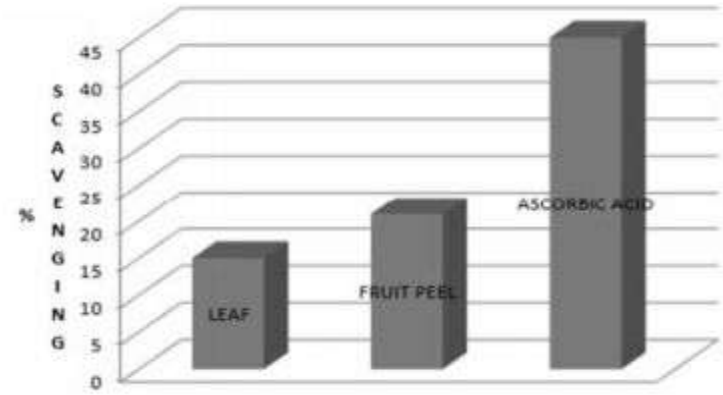

No. of Pages : 28 No. of Claims : 5

(12) PATENT APPLICATION PUBLICATION
(21) Application No.201911054811 A
(19) INDIA
(22) Date of filing of Application :31/12/2019
(43) Publication Date : 02/07/2021

(54) Title of the invention : AUTOMATED ELEVATOR SYSTEM

(51) International classification	:B66B0005020000, G06T0007120000, G01R0031120000, A62B0018020000, G01R0031340000	(71)**Name of Applicant :** **1)BML Munjal University** Address of Applicant :67 KM Milestone, National Highway - 8, Gurugram, Haryana- 122413, India. Haryana India
(31) Priority Document No	:NA	(72)**Name of Inventor :**
(32) Priority Date	:NA	**1)Pankaj Sahu**
(33) Name of priority country	:NA	**2)Saksham Gupta**
(86) International Application No	:NA	**3)Swarnim Neema**
Filing Date	:NA	**4)Dr. Rajiv Dey**
(87) International Publication No	: NA	
(61) Patent of Addition to Application Number	:NA	
Filing Date	:NA	
(62) Divisional to Application Number	:NA	
Filing Date	:NA	

(57) Abstract :
An automated elevator system, comprises multiple sensors for detecting and calculating temperature, humidity, and light, weight of person and oxygen level, multiple cameras 1, 10 for capturing inner and outer view of the elevator for extracting multiple features by feature extraction module, control unit with inbuilt communication module for receiving features and transferring data of features to cloud, decision making unit performs predictive analysis of data to generate outcomes that are further transferred to control unit for controlling elevators function, actuator controls opening/closing of elevator doors 2, 3 based on the outcomes, thermal imaging camera to capture circuitry image in order to detect fault, secondary circuitry for back-up of faulty component to eliminate elevator's malfunctioning , oxygen mask 15 to provide oxygen supply during emergency and GSM module to send information to user platform regarding emergency situation and fault detection of the elevator to inform rescue team.

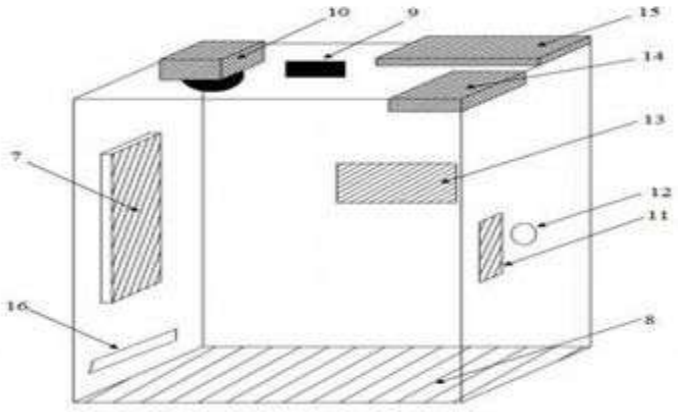

Figure 2

No. of Pages : 18 No. of Claims : 10

(12) PATENT APPLICATION PUBLICATION
(21) Application No.201911054812 A
(19) INDIA
(22) Date of filing of Application :31/12/2019
(43) Publication Date : 02/07/2021

(54) Title of the invention : SMART WASTE MANAGEMENT SYSTEM

(51) International classification	:B65F0001140000, G08B0021020000, B65F0001160000, A61G0005100000, B65F0001000000	(71)**Name of Applicant :** **1)BML Munjal University** Address of Applicant :67 KM Milestone, National Highway - 8, Gurugram, Haryana- 122413, India. Haryana India
(31) Priority Document No	:NA	(72)**Name of Inventor :** **1)Dr. Goldie Gabrani** **2)Abhishek Isireddy**
(32) Priority Date	:NA	
(33) Name of priority country	:NA	
(86) International Application No	:NA	
Filing Date	:NA	
(87) International Publication No	: NA	
(61) Patent of Addition to Application Number	:NA	
Filing Date	:NA	
(62) Divisional to Application Number	:NA	
Filing Date	:NA	

(57) Abstract :
The present invention relates to a smart waste management system, comprises a body for storing waste and a lid attached to the body for preventing the waste from rain consist multiple sensors to detect parameters (such as height and weight of waste, humidity, rain occurrence, toxic and flammable gas etc.), locator to locate position, controller to receive and analyse the parameters and position to generate command signal and transmit it to a cloud via a communication module, a retractable rod for tilting the body to transfer the waste upon pressing a button attached to the body, multiple motors for assisting movement of plate, rod and lid, a security module for preventing body from theft, alert module to beep upon filling of dustbin and a display for displaying the detected parameters.

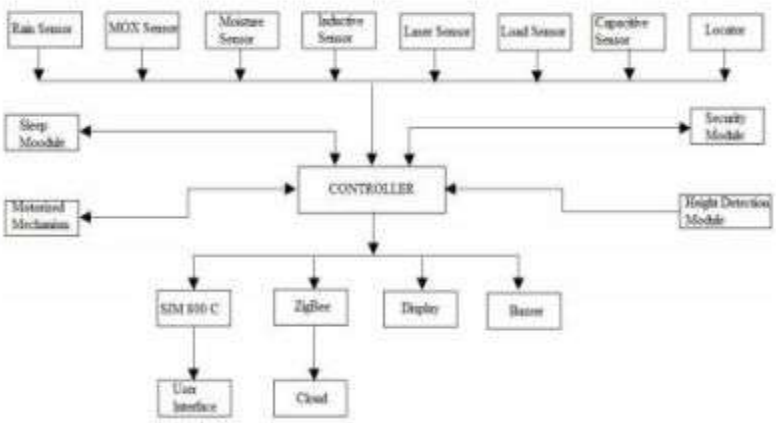

No. of Pages : 14 No. of Claims : 9

(12) PATENT APPLICATION PUBLICATION
(21) Application No.201911054813 A
(19) INDIA
(22) Date of filing of Application :31/12/2019
(43) Publication Date : 02/07/2021

(54) Title of the invention : INTELLIGENT ELEVATOR SYSTEM

(51) International classification	:A62B0007140000, B64D0010000000, B66B0011020000, B66B0005000000, B66B0013140000	(71)**Name of Applicant :** **1)BML Munjal University** Address of Applicant :67 KM Milestone, National Highway - 8, Gurugram, Haryana- 122413, India. Haryana India
(31) Priority Document No	:NA	(72)**Name of Inventor :** **1)Dr. Rajiv Dey**
(32) Priority Date	:NA	**2)Swarnim Neema**
(33) Name of priority country	:NA	**3)Saksham Gupta**
(86) International Application No	:NA	**4)Pankaj Sahu**
Filing Date	:NA	
(87) International Publication No	: NA	
(61) Patent of Addition to Application Number	:NA	
Filing Date	:NA	
(62) Divisional to Application Number	:NA	
Filing Date	:NA	

(57) Abstract :
An intelligent elevator system, comprises multiple of sensors 5 for detecting a set of parameters, an inside positioned camera 12 for capturing inner view of the elevator, multiple outside positioned cameras 1 to capture outer view of the elevator's door, a data conditioning unit for generating a conditioned data by processing the data, a feature extraction controller for extracting the features and destemming number of person outside the door and space available inside the elevator, a command controller to generate a command signal upon receiving the space availability, a driving unit to operate opening/closing of the elevator's door upon detection of the command signal, an emergency unit for providing back up power to the system, a display and speaker to announce the steps to be taken while emergency, an oxygen mask in order to provide the oxygen to people stuck inside the elevator and memory to save extracted features.

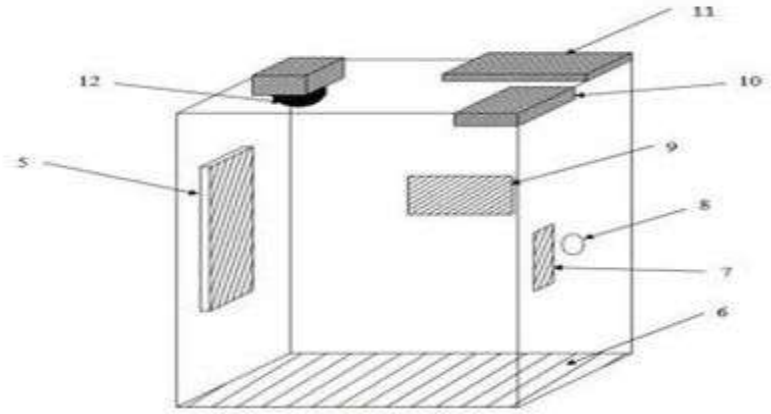

Figure 2.

No. of Pages : 16 No. of Claims : 10

(12) PATENT APPLICATION PUBLICATION
(21) Application No.201911054814 A
(19) INDIA
(22) Date of filing of Application :31/12/2019
(43) Publication Date : 02/07/2021

(54) Title of the invention : ANTI-VIBRATIONAL UTILITY SUPPORTING APPARATUS

(51) International classification	:A61B0090500000, A01D0034000000, A47G0023060000, B65F0001140000, B62B0003020000	(71)**Name of Applicant :** **1)BML Munjal University** Address of Applicant :67 KM Milestone, National Highway - 8, Gurugram, Haryana- 122413, India. Haryana India (72)**Name of Inventor :** **1)Sridharbabu Yarramaneni** **2)Amarnath Bheemaraju**
(31) Priority Document No	:NA	
(32) Priority Date	:NA	
(33) Name of priority country	:NA	
(86) International Application No	:NA	
Filing Date	:NA	
(87) International Publication No	: NA	
(61) Patent of Addition to Application Number	:NA	
Filing Date	:NA	
(62) Divisional to Application Number	:NA	
Filing Date	:NA	

(57) Abstract :
The present invention relates to an anti-vibrational utility supporting apparatus comprises multiple of rods connected with each other to form a collapsible base 5 for supporting the apparatus, two holders 6 for holding the apparatus on the lap of the user, multiple of pipes associated with each other to form a frame 3 to provide a boundary, a tray associated with the frame though two retractable clamps 4 and multiple of springs 1 to uphold an objects, multiple of containers present within the frame for storing the utilities and two knobs 7 allied with the base 5 to adjust a height of the base 5 according to user comfortability.

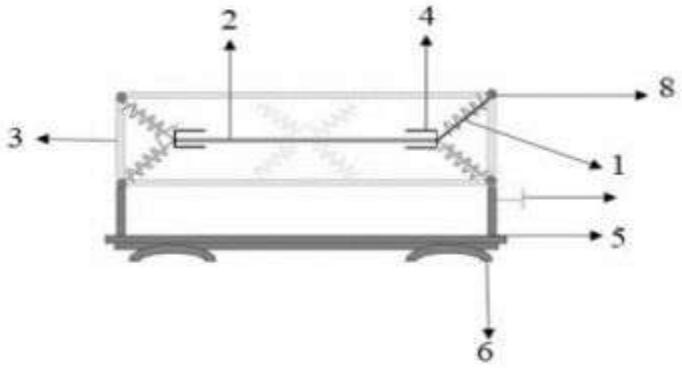

Figure 2.

No. of Pages : 13 No. of Claims : 9

(12) PATENT APPLICATION PUBLICATION
(19) INDIA
(22) Date of filing of Application :31/12/2019

(21) Application No.201911054853 A
(43) Publication Date : 02/07/2021

(54) Title of the invention : TAMPER PROOF CLOSURE FOR BOTTLES

(51) International classification	:B65D0055020000, B65B0027040000, B65D0001240000, B65D0041340000, C08F0008320000	(71)**Name of Applicant :** **1)JAISWAL, Prateek** Address of Applicant :M/s Tapon, Ram Nagar Road, Kashipur, Udham Singh Nagar, Uttarakhand-244713, INDIA Uttarakhand India
(31) Priority Document No	:NA	(72)**Name of Inventor :**
(32) Priority Date	:NA	**1)JAISWAL, Prateek**
(33) Name of priority country	:NA	
(86) International Application No	:NA	
Filing Date	:NA	
(87) International Publication No	: NA	
(61) Patent of Addition to Application Number	:NA	
Filing Date	:NA	
(62) Divisional to Application Number	:NA	
Filing Date	:NA	

(57) Abstract :
The present disclosure relates generally to closure for bottles/containers and particularly, to tamper proof closure for bottles/containers.

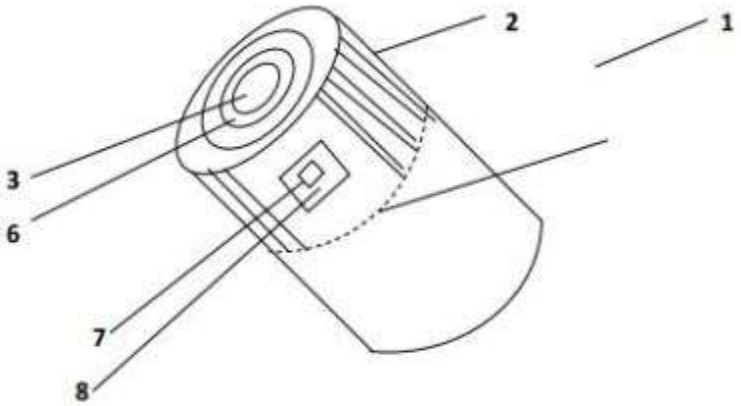

No. of Pages : 7 No. of Claims : 7

(12) PATENT APPLICATION PUBLICATION
(19) INDIA
(22) Date of filing of Application :31/12/2019

(21) Application No.201911054858 A
(43) Publication Date : 02/07/2021

(54) Title of the invention : ATTENDANCE BASED HEALTH MONITORING SYSTEM

(51) International classification	:A61B0005000000, A61B0005021000, A61B0005020500, A61B0005024000, G06F0021320000	(71)**Name of Applicant :** **1)Chandigarh University** Address of Applicant :National Highway 95, Chandigarh-Ludhiana Highway, Mohali, Punjab - 140413, India. Punjab India
(31) Priority Document No	:NA	(72)**Name of Inventor :**
(32) Priority Date	:NA	**1)Sachin Kalsi**
(33) Name of priority country	:NA	**2)Vikas Sharma**
(86) International Application No	:NA	**3)Paras Gupta**
Filing Date	:NA	**4)Rishabh Raj**
(87) International Publication No	: NA	**5)Vikas Wasson**
(61) Patent of Addition to Application Number	:NA	
Filing Date	:NA	
(62) Divisional to Application Number	:NA	
Filing Date	:NA	

(57) Abstract :
The present invention relates to an attendance based health monitoring system, wherein the system comprises biometric scanner installed in the system for acquiring attendance of a user(s), multiple biometric sensors attached to biometric scanner for sensing heartbeat, heart rates and blood pressure, a processing unit associated with the biometric sensors and scanner for receiving the data extracted by the biometric sensors and scanner for processing the attendance and physiological data of the user, a data storage unit associated with the processing unit for storing the physiological data and attendance of the user, and a user interface attached to the data storage unit for displaying the marked attendance and the physiological data of the user.

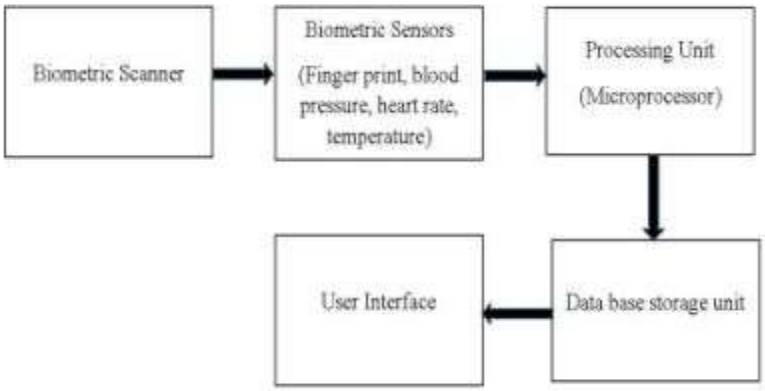

FIGURE 1

No. of Pages : 10 No. of Claims : 7

(12) PATENT APPLICATION PUBLICATION
(19) INDIA
(22) Date of filing of Application :31/12/2019

(21) Application No.201911054859 A
(43) Publication Date : 02/07/2021

(54) Title of the invention : GEOSTATIONARY SATELLITE SYSTEM

(51) International classification	:G01C0005060000, E21B0044000000, G01D0021000000, G10H0003140000, B64G0001220000	(71)**Name of Applicant :** **1)Chandigarh University** Address of Applicant :National Highway 95, Chandigarh-Ludhiana Highway, Mohali, Punjab-140413, India. Punjab India
(31) Priority Document No	:NA	(72)**Name of Inventor :** **1)Lovelash Dutt**
(32) Priority Date	:NA	
(33) Name of priority country	:NA	
(86) International Application No	:NA	
Filing Date	:NA	
(87) International Publication No	: NA	
(61) Patent of Addition to Application Number	:NA	
Filing Date	:NA	
(62) Divisional to Application Number	:NA	
Filing Date	:NA	

(57) Abstract :
The present invention relates to a geostationary satellite system, comprising; an outer casing made up of a foam material and three dimensional printing material, a microcontroller installed in the system that manages the working of all the components installed in the satellite system, a digital pressure sensor attached to the microcontroller that senses out the atmospheric pressure around the satellite, a cantilever type vibration sensor that determines the amount of vibration generated in the satellite during an accident, a LDR sensor that detects the intensity of light, a magnetometer sensor measures out magnetic field, altitude and direction using a digital field compass, a real time clock (RTC) that keep the tracks of real time time, date, and minutes, and a power supply and a voltage regulator that provides the power for the operation of the satellite and voltage regulator that regulates the voltage level to support the components from the damage.

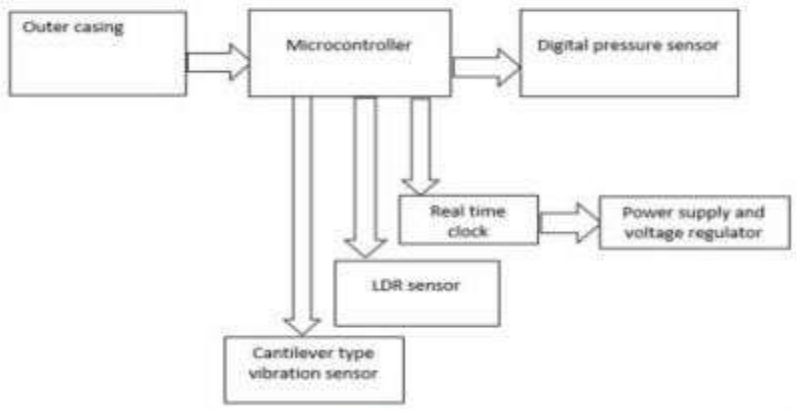

Figure 1

No. of Pages : 14 No. of Claims : 9

(12) PATENT APPLICATION PUBLICATION
(21) Application No.202011000038 A
(19) INDIA
(22) Date of filing of Application :01/01/2020
(43) Publication Date : 02/07/2021

(54) Title of the invention : A PROCESS FOR SYNTHESIS OF PD-NI BIMETALLIC NANOPARTICLES BASED PRINTING INK AND A DEVICE FOR HYDROGEN PEROXIDE SENISNG

(51) International classification	:D06M0023080000, B22F0001000000, C23C0018440000, B22F0009240000, B01J0023440000	(71)**Name of Applicant :** **1)Prem Chandra Pandey** Address of Applicant :Department of Chemistry, Indian Institute of Technology, BHU, Varanasi Uttar Pradesh India
(31) Priority Document No	:NA	(72)**Name of Inventor :** **1)Prem Chandra Pandey**
(32) Priority Date	:NA	**2)Dr Govind Pandey**
(33) Name of priority country	:NA	
(86) International Application No	:NA	
Filing Date	:NA	
(87) International Publication No	: NA	
(61) Patent of Addition to Application Number	:NA	
Filing Date	:NA	
(62) Divisional to Application Number	:NA	
Filing Date	:NA	

(57) Abstract :
The present invention relates to a method for making Pd-Ni bimetallic nanoparticles based printing ink and a device for hydrogen peroxide sensing. Functional alkoxysilanes like 3-glycidoxypropyltrimethoxysilane act as reducing agent for yielding palladium nanoparticles that may be converted into fine powder using graphite powder through adsorption and drying and acting as host matrix for stabilizing Nickel nanoparticles made through the use of conventional reducing agent. Pd-Ni- nanoparticles adsorbedgraphite powder act as conducting nano material for making printing ink from the palladium nanoparticles suspension made in volatile solvent as disclosed in IP 2019110429841 for making bi-/tri metallic nanoparticles modified screen printed electrodes for designing hydrogen peroxide sensor.

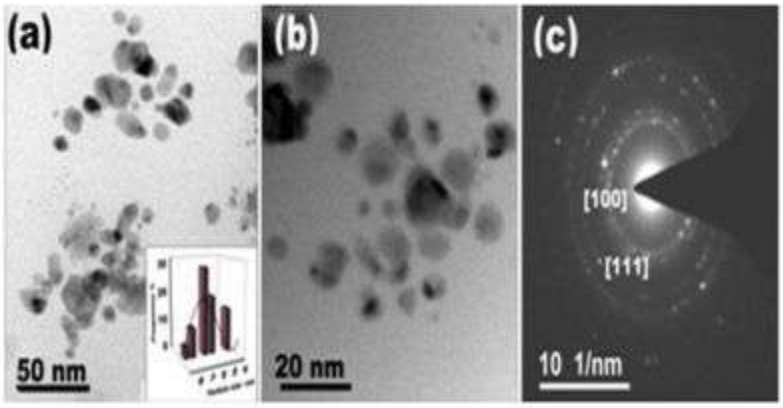

No. of Pages : 15 No. of Claims : 6

(12) PATENT APPLICATION PUBLICATION
(19) INDIA
(22) Date of filing of Application :01/01/2020

(21) Application No.202011000039 A
(43) Publication Date : 02/07/2021

(54) Title of the invention : TWO-DIMENSIONAL IN-LINE SEMICONDUCTOR DEVICE

(51) International classification	:H01L0029780000, H01L0029739000, H01L0029660000, H01L0029423000, H04N0021478800	(71)**Name of Applicant :** **1)National Institute of Technology, Kurukshetra** Address of Applicant :National Institute of Technology Kurukshetra, Kurukshetra-136119, Haryana, India Haryana India
(31) Priority Document No	:NA	(72)**Name of Inventor :** **1)Seema**
(32) Priority Date	:NA	**2)CHAUHAN, Sudakar Singh**
(33) Name of priority country	:NA	
(86) International Application No	:NA	
Filing Date	:NA	
(87) International Publication No	: NA	
(61) Patent of Addition to Application Number	:NA	
Filing Date	:NA	
(62) Divisional to Application Number	:NA	
Filing Date	:NA	

(57) Abstract :
The present subject matter at least illustrates a Vertical Tunnel Field Effect Transistor (VTFET) 100. The VTFET 100 comprising: a source-region 101 comprising a first semiconductor defining a first conductivity; a drain-region 102 comprising a second semiconductor defining a second conductivity; a channel-region 103 positioned between the source-region 101 and the drain-region 102; a gate-region 107 positioned above a portion of the source-region 101 through an epitaxial layer 109 and a gate-dielectric 108; an epitaxial layer 109, is sandwiched between the gate-region 107 through a gate-dielectric 108 and the portion of the source-region 101. A plurality of buried oxide layers are provided and comprise a first buried oxide layer 104 with first dielectric constant disposed at least partly below the source-region 101, the channel-region 103; a second buried oxide layer 105 with second dielectric constant disposed at least partly below the drain-region 102.

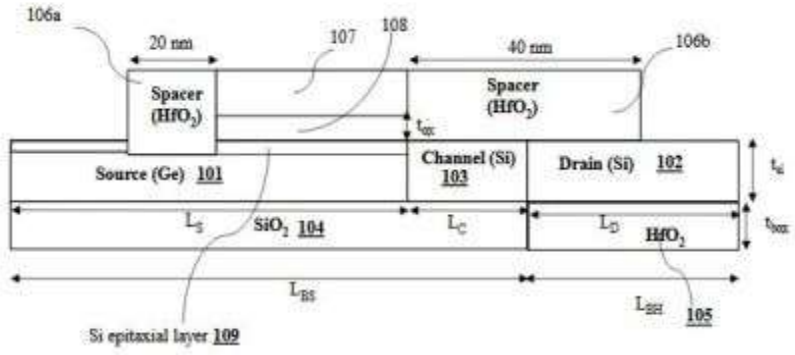

Fig. 1

No. of Pages : 23 No. of Claims : 12

(12) PATENT APPLICATION PUBLICATION
(19) INDIA
(22) Date of filing of Application :01/01/2020

(21) Application No.202011000041 A
(43) Publication Date : 02/07/2021

(54) Title of the invention : SHEAR THICKENING FLUID COMPOSITION AND A PROCESS OF PREPARATION THEREOF

(51) International classification	:C08K0003360000, B01J0037020000, B01J0020100000, A61Q0019000000, A61K0008250000	(71)**Name of Applicant :** **1)Indian Institute of Technology Delhi** Address of Applicant :Indian Institute of Technology Delhi, Hauz Khas, New Delhi- 110016, India Delhi India (72)**Name of Inventor :** **1)NEBHANI, Leena** **2)ISLAM, Ehteshamul**
(31) Priority Document No	:NA	
(32) Priority Date	:NA	
(33) Name of priority country	:NA	
(86) International Application No	:NA	
Filing Date	:NA	
(87) International Publication No	: NA	
(61) Patent of Addition to Application Number	:NA	
Filing Date	:NA	
(62) Divisional to Application Number	:NA	
Filing Date	:NA	

(57) Abstract :
The present invention provides a unique shear thickening fluid (STF) composition comprising a hybrid silica functionalized with boron and provides a process of synthesis of the same. Further, the present invention provides a hybrid silica synthesized based on one step co-condensation approach, wherein the hybrid silica is a hybrid mesoporous silica and a hybrid nonporous silica. According to the present invention, STF composition prepared from hybrid mesoporous silica have shown significant increase in shear thickening behaviour at much lower loading of the hybrid silica in the STF, wherein the shear thickening behaviour can be tuned based on loading of functionalizing agent (degree of functionalization) during the preparation of the hybrid silica.

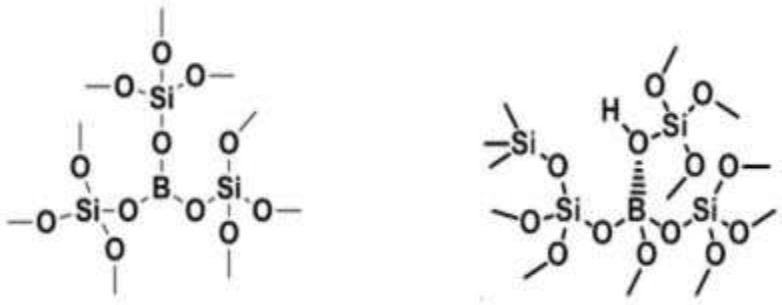

Figure 1

No. of Pages : 26 No. of Claims : 10

(12) PATENT APPLICATION PUBLICATION
(21) Application No.202011000042 A
(19) INDIA
(22) Date of filing of Application :01/01/2020
(43) Publication Date : 02/07/2021

(54) Title of the invention : A SYSTEM AND METHOD FOR LOCKING INDEXES ON WATCH DIAL

(51) International classification	:G04D0003000000, G01D0011280000, G04B0019140000, G04B0019120000, G04B0019060000	(71)**Name of Applicant :** **1)KDDL LIMITED** Address of Applicant :KAMLA CENTRE, SCO 88-89, SECTOR-8, MADHYA MARG, CHANDIGARH-160018, INDIA Chandigarh India
(31) Priority Document No	:NA	(72)**Name of Inventor :**
(32) Priority Date	:NA	**1)MR. ANIL SHARMA**
(33) Name of priority country	:NA	
(86) International Application No	:NA	
Filing Date	:NA	
(87) International Publication No	: NA	
(61) Patent of Addition to Application Number	:NA	
Filing Date	:NA	
(62) Divisional to Application Number	:NA	
Filing Date	:NA	

(57) Abstract :
The present invention relates to a system and method for placing and locking indexes on watch dial. The is a locking mechanism to lock the index on the dial plate. Then the indexes are placed on the dial and pressure in applied which goes down and the feet gets flare which spreads in the gap created in the dial.

No. of Pages : 6 No. of Claims : 3

(12) PATENT APPLICATION PUBLICATION
(19) INDIA
(22) Date of filing of Application :01/01/2020
(21) Application No.202011000058 A
(43) Publication Date : 02/07/2021

(54) Title of the invention : SYSTEM AND METHOD FOR RECORDING AND DISPLAYING MUTIPLE VIEWS SIMULTANOUSLY

(51) International classification	:H04N0005272000, H04N0005445000, H04N0021482000, H04N0021431000, G06F0009451000	(71)**Name of Applicant :** **1)SHALINI ANEJA** Address of Applicant :798-799, Main Market, Kalanur, Rohtak, Haryana 124113, India Haryana India **2)NEERAJ ANEJA**
(31) Priority Document No	:NA	(72)**Name of Inventor :**
(32) Priority Date	:NA	**1)SHALINI ANEJA**
(33) Name of priority country	:NA	**2)NEERAJ ANEJA**
(86) International Application No	:NA	
Filing Date	:NA	
(87) International Publication No	: NA	
(61) Patent of Addition to Application Number	:NA	
Filing Date	:NA	
(62) Divisional to Application Number	:NA	
Filing Date	:NA	

(57) Abstract :
This invention relates to an apparatus and methods involved in capturing of photos and videos of different views using a computing device simultaneously, and displaying the views and captured photos and videos simultaneously on a display screen of the computing device. The invention allows the user to rotate each camera in the computing device to set an angle for each camera simultaneously or different angle for each individual camera independently. The captured videos or photos are displayed simultaneously on a display screen by splitting a display screen into different sections. Each section includes controls such as buttons for controlling the capturing of the photos and videos.

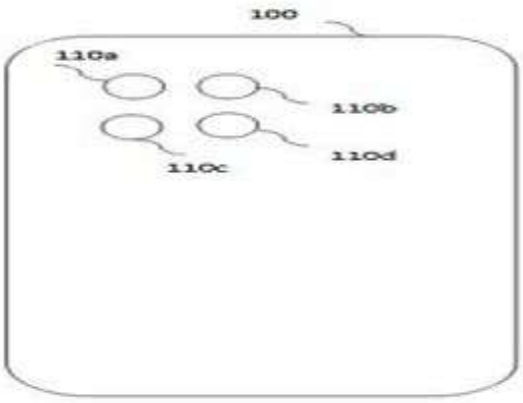

FIG. 1A

No. of Pages : 29 No. of Claims : 10

(12) PATENT APPLICATION PUBLICATION
(19) INDIA
(22) Date of filing of Application :02/01/2020

(21) Application No.202011000096 A
(43) Publication Date : 02/07/2021

(54) Title of the invention : PANT LOW GLYEMIC INDEX NOODLES

(51) International classification	:A23L0007109000, A61F0013496000, A23L0033105000, A21C0011240000, H01J0029340000	(71)**Name of Applicant :** **1)G.B. PANT UNIVERSITY OF AGRICULTURE & TECHNOLOGY, PANTNAGAR** Address of Applicant :PANTNAGAR UTTARAKHAND-263145, INDIA Uttarakhand India
(31) Priority Document No	:NA	(72)**Name of Inventor :**
(32) Priority Date	:NA	**1)VANDANA**
(33) Name of priority country	:NA	**2)SARITA SRIVASTAVA**
(86) International Application No	:NA	
Filing Date	:NA	
(87) International Publication No	: NA	
(61) Patent of Addition to Application Number	:NA	
Filing Date	:NA	
(62) Divisional to Application Number	:NA	
Filing Date	:NA	

(57) Abstract :
The present invention relates to .Pant Low Glycemic Index Noodles. The high nutrient content (crude protein, total ash, crude fat, crude fibre, calcium, iron, and zinc), ... · dietary fibre content, lysine, tryptophan and in vitro protein digestibility make QPM noodles supenor than refined wheat flou,r noodles .. Sensory evaluation of .formulated . noodles showed acceptance in terms of color, flavor, taste, texture and overall.': acceptability usirig score card. The optimized noodles have a very low glycemic.index of ..... 47 ascompared to control refined wheat flournoodles which have a glycemic index of 73.63.The postprandial effects of the noodles prove their suitability for the ·people suffering from diabetes mellitus. Thus QPM noodles can be· utilized as healthy snack food for diabetics.

No. of Pages : 26 No. of Claims : 10

(12) PATENT APPLICATION PUBLICATION
(19) INDIA
(22) Date of filing of Application :02/01/2020
(21) Application No.202011000097 A
(43) Publication Date : 02/07/2021

(54) Title of the invention : STANDARDIZATION OF SPRAY SCHEDULE AND SPRAY VOLUME OF COPPER-CHITOSAN-TRICHODERMA BASED TRIPLE COMBINATION FOR THE MANAGEMENT OF LATE BLIGHT DISEASE OF POTATO CAUSED BY PHYTOPTHORA INFESTANS

(51) International classification	:C07K0014415000, A61B0006030000, G06Q0010060000, A01C0001060000, F02B0023100000
(31) Priority Document No	:NA
(32) Priority Date	:NA
(33) Name of priority country	:NA
(86) International Application No	:NA
Filing Date	:NA
(87) International Publication No	: NA
(61) Patent of Addition to Application Number	:NA
Filing Date	:NA
(62) Divisional to Application Number	:NA
Filing Date	:NA

(71)**Name of Applicant :**
1)G.B. PANT UNIVERSITY OF AGRICULTURE & TECHNOLOGY, PANTNAGAR
Address of Applicant :PANTNAGAR UTTARAKHAND-263145, INDIA Uttarakhand India
(72)**Name of Inventor :**
1)DR. NITISH RATAN BHARDWAJ
2)DR. NANDANI SHUKLA
3)DR. SAJEESH P.K.
4)DR. A.K. TIWARI
5)DR. J. KUMAR

(57) Abstract :
The present invention relates to aprocess for management of late blight disease of potato; to standardize spray schedule and spray volumecomposition involving Copper-Chitosan and Trichoderma based triple combination and more importantly, to a method, spray schedule and spray volumeof using the composition, containing Copper, Chitosan and Trichodermaas perrelluinfor preventing or mimm1z1ng the plant disease associated with phytopthora infestanse.

No. of Pages : 23 No. of Claims : 3

(12) PATENT APPLICATION PUBLICATION
(19) INDIA
(22) Date of filing of Application :02/01/2020
(21) Application No.202011000098 A
(43) Publication Date : 02/07/2021

(54) Title of the invention : A COMPOSITION FOR COMPOSITE FLOUR

(51) International classification	:A61K0036710000, A21D0002180000, A21D0002260000, A21D0013400000, A01H0001020000	(71)**Name of Applicant :** **1)N KUSH ROLLER FLOUR MILLS PVT. LTD.** Address of Applicant :A-15, HAZRAT NIZAMUDDIN, WEST NEW DELHI-110013, INDIA Delhi India (72)**Name of Inventor :** **1)NIZAMI RIZWAN**
(31) Priority Document No	:NA	
(32) Priority Date	:NA	
(33) Name of priority country	:NA	
(86) International Application No	:NA	
Filing Date	:NA	
(87) International Publication No	: NA	
(61) Patent of Addition to Application Number	:NA	
Filing Date	:NA	
(62) Divisional to Application Number	:NA	
Filing Date	:NA	

(57) Abstract :
The Present Invention relates to a composition for composite flour comprises, from wheat flour and nigella seeds powder, which typically used to make food products such as chapati, naan, partha, and roti breads. The blend of nigella seeds in the wheat flour provides all the benefits of nigella seeds and shall be in uniform ratio of 10g Seeds powder in 10Kg of flour to obtain preferably proper nutritious flour. The health benefits of nigella seeds are many and the blending of nigella seeds allows the consumer to consume it in an easy manner.

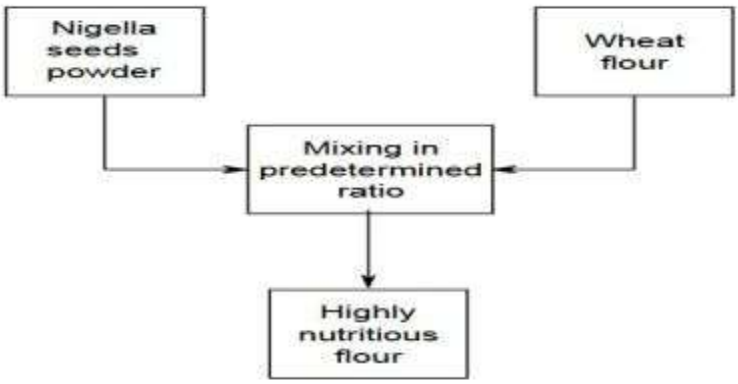

FIG. 2

No. of Pages : 9 No. of Claims : 4

(12) PATENT APPLICATION PUBLICATION
(19) INDIA
(22) Date of filing of Application :02/01/2020
(21) Application No.202011000168 A
(43) Publication Date : 02/07/2021

(54) Title of the invention : STRAW RESIDUE MANAGEMENT DEVICE ATTACHABLE TO COMBINE HARVESTER

(51) International classification	:A01D0041127000, A01D0041120000, A61M0005310000, A01F0012400000, A61M0005315000	(71)**Name of Applicant :** **1)BARTEL, Dietrich** Address of Applicant :Rosenstr 1A, 85244 Roehrmoos, Roehrmoos, Bavaria, Near Munich Germany (72)**Name of Inventor :** **1)BARTEL, Dietrich**
(31) Priority Document No	:NA	
(32) Priority Date	:NA	
(33) Name of priority country	:NA	
(86) International Application No	:NA	
Filing Date	:NA	
(87) International Publication No	: NA	
(61) Patent of Addition to Application Number	:NA	
Filing Date	:NA	
(62) Divisional to Application Number	:NA	
Filing Date	:NA	

(57) Abstract :
This invention is a supplemental device for combine harvester, enables the simultaneous harvesting of grain in the combine harvester and the management of the straw residue.

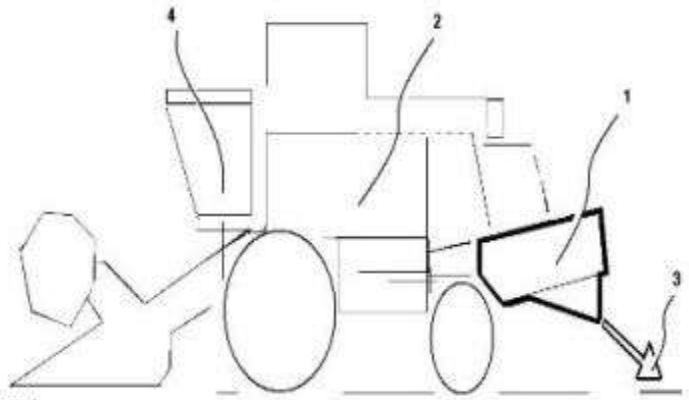

Figure 1

No. of Pages : 10 No. of Claims : 8

(12) PATENT APPLICATION PUBLICATION
(21) Application No.202014003848 A
(19) INDIA
(22) Date of filing of Application :29/01/2020
(43) Publication Date : 02/07/2021

(54) Title of the invention : A CABLE TENSIONING DEVICE FOR A SURGICAL TOOL ASSEMBLY

(51) International classification	:A61B0017000000, A61B0034300000, A61B0017880000, A61B0090000000, A61B0017290000	(71)**Name of Applicant :** **1)SS Innovations China Co. Ltd.** Address of Applicant :Room 501, 5th building, No. 291 Fucheng Road, Hangzhou Medicine Valley, Xiasha Economic Development Zone, Hangzhou, Zhejiang, China China
(31) Priority Document No	:CN201911356661.7	(72)**Name of Inventor :**
(32) Priority Date	:25/12/2019	**1)ZHANG, Leijun**
(33) Name of priority country	:China	
(86) International Application No	:NA	
Filing Date	:NA	
(87) International Publication No	: NA	
(61) Patent of Addition to Application Number	:NA	
Filing Date	:NA	
(62) Divisional to Application Number	:NA	
Filing Date	:NA	

(57) Abstract :
A cable tensioning device (500) for a surgical tool assembly (300) is disclosed herein. The surgical tool assembly (300) comprises of a housing (305) at a proximal end (301), an end effector (307) at a distal end (303), and an elongated shaft (309) connecting the housing (305) to the end effector (307). The housing (305) comprises of a plurality of spools (401), (403), (405), (407) with each spool having annular collars (429), (431) and cables anchored on each annular collar (429), (431) and thereon secured on the respective spools (401), (403), (405), (407). The cable tensioning device (500) comprises of a base plate (501) and a lower platform (701) operatively secured to the base plate where the lower platform (701) has a central recess (707) configured to receive the housing (305) of the surgical tool assembly (300). The cable tensioning device (500) further comprises of an upper platform (601) operatively fixed over the lower platform (701) and the upper platform (601) comprises of a bearing plate (615) having a plurality of circular bearings (617) configured to receive a plurality of torque bolt (619) fixedly within the plurality of circular bearings (617). The plurality of torque bolts (619) extends downwardly towards the lower platform (701) and each torque bolt (619) has a plurality of openings (621) capable of receiving a plurality of pins (623) with each pin (623) including one or more fasteners (625) capable of being received in the annual collar (429), (431) of the spools (401), (403), (405), (407) of the surgical tool assembly housing (305). The cable tensioning device (500) further comprises of an angular scale (629) attached on the plurality of bolts (619) configured to measure angle rotation of the plurality of bolts (619) and a wrench (627) operatively attached to the angular scale to apply a specific torque to the plurality of bolts (619) thereby tensioning the cables attached to the spools (401), (403), (405), (407) of the surgical tool interface housing (305).

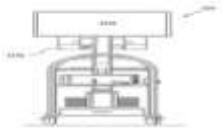

No. of Pages : 36 No. of Claims : 14

(12) PATENT APPLICATION PUBLICATION
(21) Application No.202014018242 A
(19) INDIA
(22) Date of filing of Application :28/04/2020
(43) Publication Date : 02/07/2021

(54) Title of the invention : A NOVEL VENTILATION AND DUST SUPPRESSION DEVICE FOR THE CLOSED STRUCTURE OF A STEEL DRY COAL SHED

(51) International classification	:A61M0016000000, E21F0017120000, F24F0013080000, G11B0033140000, B60H0003060000	(71)**Name of Applicant :** **1)GD LONG YUAN POWER TECHNOLOGY & ENGINEERING CO.,LTD.** Address of Applicant :15/F, Building 1, Yard 16, W.4th Ring Rd, Haidian Dist., Beijing, China China
(31) Priority Document No	:201922449732X	(72)**Name of Inventor :**
(32) Priority Date	:30/12/2019	**1)ZHAO Jinhong**
(33) Name of priority country	:China	
(86) International Application No	:NA	
Filing Date	:NA	
(87) International Publication No	: NA	
(61) Patent of Addition to Application Number	:NA	
Filing Date	:NA	
(62) Divisional to Application Number	:NA	
Filing Date	:NA	

(57) Abstract :
The present application discloses a novel ventilation and dust suppression device for the closed structure of a steel dry coal shed. By setting a leveling steel pier and matching the bottom of the leveling steel pier with the top of the coal shed, the ventilation and dust suppression device can be set horizontally on the top of the coal 10 shed; at the same time, by setting a steel foundation, it plays a supporting role between the ventilator and the leveling steel pier. The air inlet of the ventilation and dust suppression device is formed between the steel foundations and between the leveling steel piers, wherein the ventilator base, the steel foundation and the leveling steel pier are connected by bolts, so that the welding workload on site is greatly reduced, which 15 is not only convenient for on-site installation, but also easy for later maintenance and replacement. The ventilation and dust suppression device of the present application is simple in structure, easy to install and replace, which reduces the intensity and workload of the on-site construction. It can realize the exchange of the internal air and external air of the coal shed, meet the ventilation requirements of the coal shed, and 20 smoothly discharge the heat generated by the mechanical operation along with the air flow, thus ensuring the quality of coal.

No. of Pages : 16 No. of Claims : 6

(12) PATENT APPLICATION PUBLICATION
(21) Application No.202014020429 A
(19) INDIA
(22) Date of filing of Application :14/05/2020
(43) Publication Date : 02/07/2021

(54) Title of the invention : A COMBINATION DEVICE WITH TEMPERATURE ADJUSTMENT-HUMIDIFICATION-AIR SUPPLY FOR A GAS FILM COAL STORAGE SHED

(51) International classification	:B65G0003040000, B65G0003020000, B64D0013000000, A23B0007144000, E04H0001120000	(71)**Name of Applicant :** **1)GD LONG YUAN POWER TECHNOLOGY & ENGINEERING CO.,LTD.** Address of Applicant :15/F, Building 1, Yard 16, W.4th Ring Rd, Haidian Dist., Beijing, China China
(31) Priority Document No	:2019224398733	(72)**Name of Inventor :** **1)SHI Xueyan**
(32) Priority Date	:30/12/2019	
(33) Name of priority country	:China	
(86) International Application No	:NA	
Filing Date	:NA	
(87) International Publication No	: NA	
(61) Patent of Addition to Application Number	:NA	
Filing Date	:NA	
(62) Divisional to Application Number	:NA	
Filing Date	:NA	

(57) Abstract :
The present application discloses a combination device with temperature adjustment-humidification-air supply for a gas film coal storage shed. By setting a temperature adjustment unit on the air supply path of the air supply unit, the temperature of the air entering the gas film coal storage shed is adjusted to meet the needs of the ambient temperature in the gas film coal storage shed, which is not only beneficial to the storage of coal, but also to the construction operations of the staff; at the same time, by setting a humidification unit on the air supply path of the air supply unit, the air entering the gas film coal storage shed is humidified to increase the humidity of the air in the gas film coal storage shed, which is beneficial to the treatment of the fugitive dust of coal in the gas film coal storage shed and improves the on-site working environment. Compared with the prior art, the present application can eliminate the fugitive dust in the gas film coal storage shed, and adjust the ambient temperature in the gas film coal storage shed, which is conducive to the storage of coal, and also improves the physical health of the workers, and meanwhile also solves the problem of snow load on the top of the gas film coal storage shed by temperature regulation in winter.

No. of Pages : 15 No. of Claims : 8

(12) PATENT APPLICATION PUBLICATION
(21) Application No.202014038014 A
(19) INDIA
(22) Date of filing of Application :03/09/2020
(43) Publication Date : 02/07/2021

(54) Title of the invention : SHEET-LIKE MATERIAL PROCESSING APPARATUS

(51) International classification	:G07D0011400000, G07D0011160000, G03G0015000000, B65H0029400000, G01N0001200000
(31) Priority Document No	:2019-233976
(32) Priority Date	:25/12/2019
(33) Name of priority country	:Japan
(86) International Application No	:NA
Filing Date	:NA
(87) International Publication No	: NA
(61) Patent of Addition to Application Number	:NA
Filing Date	:NA
(62) Divisional to Application Number	:NA
Filing Date	:NA

(71)**Name of Applicant :**
1)Hitachi-Omron Terminal Solutions, Corp.
Address of Applicant :6-3, Osaki 1-chome, Shinagawa-ku, Tokyo 141-8576, Japan Japan
(72)**Name of Inventor :**
1)Daisuke KITAUCHI
2)Tooru MIYASAKA
3)Akihiro NAGURA

(57) Abstract :
ABSTRACT SHEET-LIKE MATERIAL PROCESSING APPARATUS In a sheet-like material processing apparatus that processes sheet-like materials, and includes: a conveyance path along which a sheet-like material is pinched and conveyed by using rollers or belts; and a vaned wheel including a plurality of vanes that accumulate sheet-like materials conveyed from the conveyance path, rotation axes of pinching means including a pair of rollers arranged at a terminal section of the conveyance path are arranged to be parallel to a rotation axis of the vaned wheel, and at positions that are different from the rotation axis of the vaned wheel as seen in a direction of the rotation axes of the pinching means, and at least part of an outline of at least one roller of the pinching means as seen in a direction of the rotation axis of the vaned wheel is arranged inside an outermost rotation circle of the vanes included in the vaned wheel.

No. of Pages : 28 No. of Claims : 8

(12) PATENT APPLICATION PUBLICATION
(21) Application No.202014046229 A
(19) INDIA
(22) Date of filing of Application :23/10/2020
(43) Publication Date : 02/07/2021

(54) Title of the invention : ANTENNA ASSEMBLY AND ELECTRONIC DEVICE

(51) International classification	:H01Q0001480000, H01Q0009040000, H01Q0001380000, H01Q0009420000, H01Q0001240000
(31) Priority Document No	:201922425681.7
(32) Priority Date	:26/12/2019
(33) Name of priority country	:China
(86) International Application No	:NA
Filing Date	:NA
(87) International Publication No	: NA
(61) Patent of Addition to Application Number	:NA
Filing Date	:NA
(62) Divisional to Application Number	:NA
Filing Date	:NA

(71)**Name of Applicant :**
1)GUANGDONG OPPO MOBILE TELECOMMUNICATIONS CORP., LTD.
Address of Applicant :NO. 18, HAIBIN ROAD, WUSHA, CHANG'AN, DONGGUAN, GUANGDONG 523860, CHINA China
(72)**Name of Inventor :**
1)LI, SI

(57) Abstract :
An antenna assembly (200) and an electronic device (100) are disclosed. The antenna assembly (200) includes a near-field-communication (NFC) integrated-circuit (IC) (21), a conductive loop, and a radiation-field enhancer (26). The NFC IC (21) includes a first differential signal port (211) and a second differential signal port (212) for providing a differential excitation current. The first metal stub (23) extends from the first ground portion (221) of the ground plane (22) and electrically connected to the first differential signal port (211). The conductor (25) is spaced apart from the ground plane (22), and is electrically connected to the second differential signal port (212) and the second ground portion (222), respectively. The radiation-field enhancer (26) is disposed between the conductor (25) and the ground plane (22) and configured to enhance a field strength of an NFC radiation-field generated by the conductor (25) in response to the differential excitation current being transmitted.

No. of Pages : 44 No. of Claims : 15

(12) PATENT APPLICATION PUBLICATION
(21) Application No.202014047864 A
(19) INDIA
(22) Date of filing of Application :03/11/2020
(43) Publication Date : 02/07/2021

(54) Title of the invention : OPTICAL IMAGING LENS ASSEMBLY •

(51) International classification	:G02B0013000000, G02B0009640000, G02B0013180000, G02B0009620000, G02B0009600000
(31) Priority Document No	:201911396622.X
(32) Priority Date	:30/12/2019
(33) Name of priority country	:China
(86) International Application No	:NA
Filing Date	:NA
(87) International Publication No	: NA
(61) Patent of Addition to Application Number	:NA
Filing Date	:NA
(62) Divisional to Application Number	:NA
Filing Date	:NA

(71)**Name of Applicant :**
1)Zhejiang Sunny Optical Co., Ltd
Address of Applicant :No. 66-68 Shunyu Road, Yuyao, Ningbo City, Zhejiang Province 315400, China China
(72)**Name of Inventor :**
1)XU, Wuchao
2)ZHANG, Kaiyuan
3)WANG, Xiaofang
4)ZHOU, Ying
5)DAI, Fujian
6)ZHAO, Liefeng

(57) Abstract :
ABSTRACT OPTICAL IMAGING LENS ASSEMBLY The present disclosure discloses an optical imaging lens assembly, sequentially from an object side to an image side along an optical axis, including: a first lens having refractive power, an object-side surface thereof is concave, and an image-side surface thereof is convex; a second lens having refractive power; a third lens having refractive power; a fourth lens having refractive power; a fifth lens having negative refractive power, and an object-side surface thereof is concave; a sixth lens having positive refractive power; and a seventh lens having refractive power. A total effective focal length f of the optical imaging lens assembly and an effective focal length f3 of the third lens may satisfy f3/f > 1.49. Figure. 1

No. of Pages : 39 No. of Claims : 20

(12) PATENT APPLICATION PUBLICATION
(21) Application No.202014047993 A
(19) INDIA
(22) Date of filing of Application :03/11/2020
(43) Publication Date : 02/07/2021

(54) Title of the invention : HIGH-PRESSURE TANK AND METHOD FOR MANUFACTURING HIGH-PRESSURE TANK

(51) International classification	:F17C0001060000, B29C0070320000, B29L0031000000, B32B0001080000, F17C0001160000
(31) Priority Document No	:2019-235219
(32) Priority Date	:25/12/2019
(33) Name of priority country	:Japan
(86) International Application No	:NA
Filing Date	:NA
(87) International Publication No	: NA
(61) Patent of Addition to Application Number	:NA
Filing Date	:NA
(62) Divisional to Application Number	:NA
Filing Date	:NA

(71)**Name of Applicant :**
1)TOYOTA JIDOSHA KABUSHIKI KAISHA
Address of Applicant :1, Toyota-cho, Toyota-shi, Aichi-ken, 471-8571, Japan Japan
(72)**Name of Inventor :**
1)Koji KATANO

(57) Abstract :
ABSTRACT HIGH-PRESSURE TANK AND METHOD FOR MANUFACTURING HIGH-PRESSURE TANK A method for manufacturing a high-pressure tank (10) including a liner (11) and a fiber-reinforced resin layer (12), the fiber-reinforced resin layer (12) having a first reinforcing layer covering an outer surface of the liner (11) and a second reinforcing layer (13) covering an outer surface of the first reinforcing layer includes: forming a cylinder member (21) made of a fiber-reinforced resin and having fibers oriented in a circumferential direction of the cylinder member (21); forming two dome members (22, 23) made of the fiber-reinforced resin; forming a reinforcing body (20) that is the first reinforcing layer by joining the cylinder member (21) and the dome members (22, 23); and forming on an outer surface of the reinforcing body (20) the second reinforcing layer (13) made of the fiber-reinforced resin and having fibers oriented across the dome members (22, 23). Selected drawing: FIG. 3

No. of Pages : 60 No. of Claims : 12

(12) PATENT APPLICATION PUBLICATION
(19) INDIA
(22) Date of filing of Application :09/11/2020
(21) Application No.202014048803 A
(43) Publication Date : 02/07/2021

(54) Title of the invention : BRAKE CONTROL SYSTEM

(51) International classification	:F16D0065560000, B60T0008320000, F16D0051200000, F16D0065660000, F16C0019540000
(31) Priority Document No	:2019-238764
(32) Priority Date	:27/12/2019
(33) Name of priority country	:Japan
(86) International Application No	:NA
Filing Date	:NA
(87) International Publication No	: NA
(61) Patent of Addition to Application Number	:NA
Filing Date	:NA
(62) Divisional to Application Number	:NA
Filing Date	:NA

(71)**Name of Applicant :**
1)SUZUKI MOTOR CORPORATION
Address of Applicant :300 Takatsuka-cho, Minami-ku, Hamamatsu-shi, Shizuoka 432-8611, Japan Japan
(72)**Name of Inventor :**
1)Hiromitsu NISHIZAWA

(57) Abstract :
[Problem to be Solved] In a brake control system, a clearance between a drum and a shoe is appropriately adjusted by an adjuster. [Solution] The brake control system includes: a drum brake having a drum and a shoe, a hydraulic unit capable of adjusting brake fluid pressure to be applied to the drum brake; and a shoe temperature obtaining unit capable of obtaining a temperature of the shoe. The hydraulic unit adjusts the brake fluid pressure to increase from an initial value to a first assist set value when a rise rate of a pressing force of a brake pedal is a predetermined rise rate threshold value or more, and a pressing amount of the brake pedal is a predetermined pressing amount threshold value or more. The drum brake has an adjuster capable of automatically adjusting a clearance between the drum and the shoe. The hydraulic unit changes the first assist set value to a second assist set value being less than the first assist set value when an obtained value of the temperature of the shoe is a predetermined temperature threshold value or more. Figure 1

No. of Pages : 38 No. of Claims : 3

(12) PATENT APPLICATION PUBLICATION
(19) INDIA
(22) Date of filing of Application :09/11/2020

(21) Application No.202014048917 A
(43) Publication Date : 02/07/2021

(54) Title of the invention : FOUR STROKE RELATIVE MOTION CYLINDER WITH DEDICATED COMPRESSION SPACE

(51) International classification	:F02B0075020000, B60T0008320000, F16F0009512000, F04B0039120000, F04B0053160000
(31) Priority Document No	:PCT/US2019/068510
(32) Priority Date	:25/12/2019
(33) Name of priority country	:PCT
(86) International Application No	:NA
Filing Date	:NA
(87) International Publication No	: NA
(61) Patent of Addition to Application Number	:NA
Filing Date	:NA
(62) Divisional to Application Number	:NA
Filing Date	:NA

(71)**Name of Applicant :**
1)HANNA, Ibrahim Mounir
Address of Applicant :14818 SW, 110th Terrace Miami, Florida 33196, United States of America U.S.A.
(72)**Name of Inventor :**
1)HANNA, Ibrahim Mounir

(57) Abstract :
Implementations are disclosed herein that relate to a cylinder occupying structure. An example provides a cylinder system comprising a mechanical cylinder including an internal space in which a fluid is introduced, and a piston configured for reciprocating motion in the internal space, and a cylinder occupying structure including a floating piston, wherein the floating piston is variably advanced into, and retracted from, the internal space of the cylinder in correspondence with the reciprocating motion of the piston and where parts of the occupying structure and the piston may surround the combustion space, and where fluid compression and fluid combustion is conducted within separate spaces.

No. of Pages : 64 No. of Claims : 19

(12) PATENT APPLICATION PUBLICATION
(19) INDIA
(22) Date of filing of Application :19/11/2020

(21) Application No.202014050421 A
(43) Publication Date : 02/07/2021

(54) Title of the invention : BOARD MATING CONNECTOR

(51) International classification	:H01R0013646000, H01R0013647100, H01R0012910000, H01R0012710000, H01R0013647700
(31) Priority Document No	:10-2019-0176493
(32) Priority Date	:27/12/2019
(33) Name of priority country	:Republic of Korea
(86) International Application No	:NA
Filing Date	:NA
(87) International Publication No	: NA
(61) Patent of Addition to Application Number	:NA
Filing Date	:NA
(62) Divisional to Application Number	:NA
Filing Date	:NA

(71)**Name of Applicant :**
1)GigaLane Co., Ltd.
Address of Applicant :61, Dongtansandan 10-gil, Dongtan-myeon, Hwaseong-si, Gyeonggi-do, 18487, Republic of Korea Republic of Korea

(72)**Name of Inventor :**
1)JUNG, Kyung Hun
2)SONG, Hwa Yoon
3)KIM, Young Jo
4)LEE, Yu Jin
5)LEE, Jae Jun
6)SEO, Sang Min
7)JUNG, Hee Seok

(57) Abstract :
The present invention relates to a board mating connector including a first body part having a first hollow portion formed therein, a signal contact part inserted into the first hollow portion, a dielectric part positioned between the first body part and the signal contact part, a second body part which has a second hollow portion formed therein, is positioned between the dielectric part and the first body part, and is formed of a metal plate, and a ground contact part which extends upward from an upper side of the second body part and is separated into a plurality of portions by a plurality of slits to have elasticity.

No. of Pages : 33 No. of Claims : 15

(12) PATENT APPLICATION PUBLICATION
(19) INDIA
(22) Date of filing of Application :20/11/2020

(21) Application No.202014050546 A
(43) Publication Date : 02/07/2021

(54) Title of the invention : BOARD MATING CONNECTOR

(51) International classification	:H01R0013646000, H01R0012910000, H01R0013647100, H01R0013647700, H01R0012710000
(31) Priority Document No	:10-2019-0176473
(32) Priority Date	:27/12/2019
(33) Name of priority country	:Republic of Korea
(86) International Application No	:NA
Filing Date	:NA
(87) International Publication No	: NA
(61) Patent of Addition to Application Number	:NA
Filing Date	:NA
(62) Divisional to Application Number	:NA
Filing Date	:NA

(71)**Name of Applicant :**
1)GigaLane Co., Ltd.
Address of Applicant :61, Dongtansandan 10-gil, Dongtan-myeon, Hwaseong-si, Gyeonggi-do, 18487, Republic of Korea Republic of Korea

(72)**Name of Inventor :**
1)JUNG, Kyung Hun
2)SONG, Hwa Yoon
3)KIM, Young Jo
4)LEE, Yu Jin
5)LEE, Jae Jun
6)SEO, Sang Min
7)JUNG, Hee Seok

(57) Abstract :
The present disclosure relates to a board mating connector including a first body part having a first hollow portion formed therein, a signal contact part inserted into the first hollow portion, a dielectric part positioned between the first body part and the signal contact part, a second body part which has a second hollow portion formed therein, is positioned between the dielectric part and the first body part, and is formed of a metal plate, and a ground contact part which extends upward from an upper side of the second body part and is separated into a plurality of portions by a plurality of slits to have elasticity.

No. of Pages : 29 No. of Claims : 13

(12) PATENT APPLICATION PUBLICATION
(21) Application No.202014052056 A
(19) INDIA
(22) Date of filing of Application :30/11/2020
(43) Publication Date : 02/07/2021

(54) Title of the invention : HARNESS PROTECTION STRUCTURE

(51) International classification	:H01R0013629000, B60R0016020000, H01R0013580000, B25J0019000000, H01R0013405000
(31) Priority Document No	:2019-239040
(32) Priority Date	:27/12/2019
(33) Name of priority country	:Japan
(86) International Application No	:NA
Filing Date	:NA
(87) International Publication No	: NA
(61) Patent of Addition to Application Number	:NA
Filing Date	:NA
(62) Divisional to Application Number	:NA
Filing Date	:NA

(71)**Name of Applicant :**
1)SUZUKI MOTOR CORPORATION
Address of Applicant :300 Takatsuka-cho, Minami-ku, Hamamatsu-shi, Shizuoka 432-8611, Japan Japan
(72)**Name of Inventor :**
1)Kenshi FUKUNAGA
2)Yoshitaka KONDO

(57) Abstract :
[Problem to be Solved] To prevent breakage of a harness and a connector in an operation of installing a power unit. [Solution] A protector 20 in which a harness 5 is inserted is attached to an outer side part of a power unit (motor unit 1). A connector 10 is disposed on an end of the harness 5, the end being located outside the protector 20, and the connector 10 is connected to a connector receiving part 2 disposed on the outer side part of the motor unit 1. A rib structure is disposed on an upper face part 21 of the protector 20, the rib structure includes a first U-shaped part 23 open to a vehicle inner side in vehicle top view, and the first U-shaped part 23 is capable of installing the connector 10 unconnected to the connector receiving part 2 and disposed inside the first U-shaped part 23.

No. of Pages : 30 No. of Claims : 5

(12) PATENT APPLICATION PUBLICATION
(19) INDIA
(22) Date of filing of Application :01/12/2020
(21) Application No.202014052346 A
(43) Publication Date : 02/07/2021

(54) Title of the invention : EXHAUST GAS PURIFICATION CATALYST

(51) International classification	:B01D0053940000, F01N0003280000, B01J0035000000, B01J0023630000, B01J0037020000
(31) Priority Document No	:2019-235915
(32) Priority Date	:26/12/2019
(33) Name of priority country	:Japan
(86) International Application No	:NA
Filing Date	:NA
(87) International Publication No	: NA
(61) Patent of Addition to Application Number	:NA
Filing Date	:NA
(62) Divisional to Application Number	:NA
Filing Date	:NA

(71)**Name of Applicant :**
1)TOYOTA JIDOSHA KABUSHIKI KAISHA
Address of Applicant :1, Toyota-cho, Toyota-shi, Aichi 471-8571, Japan Japan
2)CATALER CORPORATION
(72)**Name of Inventor :**
1)Norimichi SHIMANO
2)Shogo SHIRAKAWA
3)Masahide MIURA
4)Isao CHINZEI
5)Seiji NAKAHIGASHI
6)Hiroki NIHASHI
7)Hiromi TOGASHI
8)Tomomasa AIKAWA
9)Isao NAITO

(57) Abstract :
ABSTRACT OF THE DISCLOSURE The present disclosure provides an exhaust gas purification catalyst having improved durability, which comprises a substrate and a catalyst coat layer formed on the substrate, the catalyst coat layer having a two-layer structure, wherein the catalyst coat layer includes an upstream portion on an upstream side and a downstream portion on a downstream side in an exhaust gas flow direction, and a part or all of the upstream portion is formed on a part of the downstream portion, wherein the downstream portion contains Rh fine particles, and wherein the Rh fine particles have an average particle size measured by a transmission electron microscope observation of 1.0 nm or more to 2.0 nm or less, and a standard deviation s of the particle size of 0.8 nm or less.

No. of Pages : 33 No. of Claims : 4

(12) PATENT APPLICATION PUBLICATION
(19) INDIA
(22) Date of filing of Application :03/12/2020
(21) Application No.202014052698 A
(43) Publication Date : 02/07/2021

(54) Title of the invention : SCROLL COMPRESSOR

(51) International classification	:F04C0018020000, F04C0023000000, F04C0027000000, F04C0029000000, F04C0029120000
(31) Priority Document No	:201911354394.X
(32) Priority Date	:27/12/2019
(33) Name of priority country	:China
(86) International Application No	:NA
Filing Date	:NA
(87) International Publication No	: NA
(61) Patent of Addition to Application Number	:NA
Filing Date	:NA
(62) Divisional to Application Number	:NA
Filing Date	:NA

(71)**Name of Applicant :**
1)DANFOSS (TIANJIN) LTD.
Address of Applicant :No. 5 Fuyuan Road, Wuqing Development Area, Tianjin, 301700, China China
(72)**Name of Inventor :**
1)LEI, Quanping
2)WANG, Zaiwang
3)YAO, Gang
4)ZHOU, Xueyou
5)YAO, Wenhu
6)QIAN, Kun
7)BAO, Changqiao

(57) Abstract :
Embodiments of the present disclosure provide a scroll compressor. The scroll compressor includes: a fixed scroll having an end plate and a fixed scroll wrap extending from the end plate; an orbiting scroll having an orbiting scroll wrap, the orbiting scroll wrap being engaged with the fixed scroll wrap to form a plurality of compression chambers for compressing a medium; a channel formed in the end plate of the fixed scroll, the channel leading to one compression chamber of the plurality of compression chambers; and a valve provided on the end plate of the fixed scroll, and configured to open when a pressure in the one compression chamber is higher than a predetermined pressure threshold so as to allow the medium in the one compression chamber to flow out of the one compression chamber through the channel. The scroll compressor according to the embodiments of the present disclosure, for example, can improve the performance of the scroll compressor.

No. of Pages : 16 No. of Claims : 11

(12) PATENT APPLICATION PUBLICATION
(19) INDIA
(22) Date of filing of Application :07/12/2020

(21) Application No.202014053120 A
(43) Publication Date : 02/07/2021

(54) Title of the invention : VEHICLE CONTROL SYSTEM

(51) International classification	:G01C0021340000, B61L0027000000, B61L0003000000, B61L0025020000, G01C0021360000
(31) Priority Document No	:17/727,220
(32) Priority Date	:26/12/2019
(33) Name of priority country	:U.S.A.
(86) International Application No	:NA
Filing Date	:NA
(87) International Publication No	: NA
(61) Patent of Addition to Application Number	:NA
Filing Date	:NA
(62) Divisional to Application Number	:NA
Filing Date	:NA

(71)**Name of Applicant :**
1)Transportation IP Holdings, LLC
Address of Applicant :901 Main Avenue Norwalk Connecticut U.S.A. 06851 U.S.A.
(72)**Name of Inventor :**
1)Gayathri, Seenumani
2)Harry Kirk Mathews, Jr.
3)James D. Brooks

(57) Abstract :
ABSTRACT VEHICLE CONTROL SYSTEM A method that may include obtaining environmental parameters related to one or more routes of a trip for a first vehicle system, and determining one or more expenditure sections and one or more charging sections of the one or more routes by predicting where the first vehicle system will consume energy and where the first vehicle system will generate the energy, respectively, during the trip based on the environmental parameters. A first trip plan may be obtained for the trip based on the one or more expenditure sections and the one or more charging sections, the trip plan designating one or more operational settings for the first vehicle system for travel during the trip.

No. of Pages : 42 No. of Claims : 20

(12) PATENT APPLICATION PUBLICATION
(19) INDIA
(22) Date of filing of Application :07/12/2020

(21) Application No.202014053167 A
(43) Publication Date : 02/07/2021

(54) Title of the invention : DISPLAY DEVICE

(51) International classification	:G06F0003041000, G02B0027010000, G09F0009300000, B60K0035000000, G09G0005000000
(31) Priority Document No	:10-2019-0179467
(32) Priority Date	:31/12/2019
(33) Name of priority country	:Republic of Korea
(86) International Application No	:NA
Filing Date	:NA
(87) International Publication No	: NA
(61) Patent of Addition to Application Number	:NA
Filing Date	:NA
(62) Divisional to Application Number	:NA
Filing Date	:NA

(71)**Name of Applicant :**
1)LG Display Co., Ltd.
Address of Applicant :128, Yeoui-daero, Yeongdeungpo-gu, Seoul 07336 , Republic of Korea Republic of Korea
(72)**Name of Inventor :**
1)Cho, Namwook
2)Kim, EuiTae
3)Shin, KiSeob

(57) Abstract :
A display device (10) is disclosed, which may display an image even in an area overlapped with a camera and have high light transmittance. The display device (10) comprises a substrate (110) provided with a display area (DA1) including a first display area (DA1) and a second display area (DA2), a first transistor (T1) provided in the first display area (DA1) over the substrate (110), a second transistor (T2) provided in the second display area (DA2) over the substrate (110), a first subpixel (FSP) supplied with a power source from the first transistor (T1), and a second subpixel (SSP) supplied with a power source from the second transistor (T2). At least two or more second subpixels (SSP) share one second transistor (T2). REF. FIG.: 1

No. of Pages : 44 No. of Claims : 17

(12) PATENT APPLICATION PUBLICATION
(19) INDIA
(22) Date of filing of Application :14/12/2020
(21) Application No.202014054325 A
(43) Publication Date : 02/07/2021

(54) Title of the invention : DISPLAY DEVICE

(51) International classification	:G06F0003041000, G02B0027010000, G09F0009300000, B60K0035000000, G09G0005000000
(31) Priority Document No	:10-2019-0175882
(32) Priority Date	:27/12/2019
(33) Name of priority country	:Republic of Korea
(86) International Application No	:NA
Filing Date	:NA
(87) International Publication No	: NA
(61) Patent of Addition to Application Number	:NA
Filing Date	:NA
(62) Divisional to Application Number	:NA
Filing Date	:NA

(71)**Name of Applicant :**
1)LG DISPLAY CO., LTD
Address of Applicant :128 Yeoui-daero, Yeongdeungpo-gu, Seoul 07336, Republic of Korea, Republic of Korea
(72)**Name of Inventor :**
1)Lee, Shin-Bok
2)Jeong, HoYoung

(57) Abstract :
Disclosed is a display device in which an optical sensor can be easily provided on a display panel (110) without causing a decrease in area or a change in shape of an active area (AA) by forming a low-resolution area in a partial area of the active area (AA) of the display panel (110) and providing the optical sensor on a back surface of the display panel (110) overlapping the lowresolution area. By providing a light source (210) that emitting light for gesture sensing or the like on a flexible printed circuit (500) which is bonded to a non-active area (NA), it is possible to curb an influence of light emitted from the light source (210) on an image, to prevent an increase in area of the non-active area (NA), and to realize a gesture sensing function of the display device. Ref. Fig.: 1

No. of Pages : 41 No. of Claims : 20

(12) PATENT APPLICATION PUBLICATION
(19) INDIA
(22) Date of filing of Application :15/12/2020

(21) Application No.202014054530 A
(43) Publication Date : 02/07/2021

(54) Title of the invention : CANNULATED, MODULAR FEMORAL BROACH AND SURGICAL INSTRUMENT HANDLE

(51) International classification	:A61B0017000000, A61B0017160000, A61B0090000000, A61B0017340000, A61F0002460000
(31) Priority Document No	:16/729,355
(32) Priority Date	:28/12/2019
(33) Name of priority country	:U.S.A.
(86) International Application No	:NA
Filing Date	:NA
(87) International Publication No	: NA
(61) Patent of Addition to Application Number	:NA
Filing Date	:NA
(62) Divisional to Application Number	:NA
Filing Date	:NA

(71)**Name of Applicant :**
1)Depuy Ireland Unlimited Company
Address of Applicant :Loughbeg Industrial Estate, Ringaskiddy, Cork, Ireland Ireland
(72)**Name of Inventor :**
1)HATHAWAY, Tyler S.
2)CARVER, Adam L.
3)STEFFE, Kyle D.
4)MATYAS, Aaron J.
5)WEBB, Anthony J.
6)TSUKAYAMA, Craig S.

(57) Abstract :
An orthopaedic surgical instrument assembly includes a surgical reamer, a cannulated broach, and an instrument handle. The broach includes a bore sized to slide over a shaft of the reamer. The handle attaches to the broach and also includes a bore sized to slide over a shaft of the reamer. A modular broach assembled from a number of broach segments may be used. Methods associated with the surgical instrument assembly are also disclosed.

No. of Pages : 46 No. of Claims : 10

(12) PATENT APPLICATION PUBLICATION
(21) Application No.202014054590 A
(19) INDIA
(22) Date of filing of Application :15/12/2020
(43) Publication Date : 02/07/2021

(54) Title of the invention : YARN WINDING DEVICE, AUTOMATIC WINDER, AND YARN WINDING METHOD

(51) International classification	:B65H0063060000, B65H0054280000, B65H0067080000, B65H0057220000, B65H0054700000	(71)**Name of Applicant :** **1)MURATA MACHINERY, LTD.** Address of Applicant :3 Minami Ochiai-cho, Kisshoin, Minami-ku, Kyoto-shi, Kyoto 601-8326, Japan Japan
(31) Priority Document No	:2019-239290	(72)**Name of Inventor :** **1)Kenichi MURAYAMA** **2)Koichi TAGAITO**
(32) Priority Date	:27/12/2019	
(33) Name of priority country	:Japan	
(86) International Application No	:NA	
Filing Date	:NA	
(87) International Publication No	: NA	
(61) Patent of Addition to Application Number	:NA	
Filing Date	:NA	
(62) Divisional to Application Number	:NA	
Filing Date	:NA	

(57) Abstract :
YARN WINDING DEVICE, AUTOMATIC WINDER, AND YARN WINDING METHOD In a winding unit 2 that rotates a package P while 5 traversing a yarn Y to wind the yarn Y, when a diameter of the package P exceeds a predetermined diameter, a unit control section 40 executes a deceleration mode for decelerating a winding speed of the yarn Y. [Most Illustrative Drawing] FIG. 2

No. of Pages : 28 No. of Claims : 8

(12) PATENT APPLICATION PUBLICATION
(19) INDIA
(22) Date of filing of Application :16/12/2020

(21) Application No.202014054721 A
(43) Publication Date : 02/07/2021

(54) Title of the invention : FLEXIBLE DISPLAY DEVICE

(51) International classification	:G06F0001160000, G09F0009300000, H01L0051000000, G06F0003041000, H01L0027320000
(31) Priority Document No	:10-2019-0176663
(32) Priority Date	:27/12/2019
(33) Name of priority country	:Republic of Korea
(86) International Application No	:NA
Filing Date	:NA
(87) International Publication No	: NA
(61) Patent of Addition to Application Number	:NA
Filing Date	:NA
(62) Divisional to Application Number	:NA
Filing Date	:NA

(71)**Name of Applicant :**
1)LG Display Co., Ltd.
Address of Applicant :128, Yeoui-daero, Yeongdeungpo-gu, Seoul 07336, Republic of Korea Republic of Korea
(72)**Name of Inventor :**
1)Yun, Junho
2)Jang, DongWon
3)Baek LokDam

(57) Abstract :
A flexible display device (100, 200, 300, 400) may comprise a display panel (110), including a display area (AA), a nondisplay area (NA) and a bending area (BA), bent in a rear direction so that one edge of the display panel (110) has a predetermined curvature, a first back plate (101a, 401a) and a second back plate (101b, 401b), disposed on a rear surface of the display panel (110), a cushion tape (168, 468) disposed on a rear surface of the first back plate (101a, 401a), and a fixing tape (170, 175, 370, 475), disposed between the cushion tape (168, 468) and the second back plate (101b, 401b), made of an adhesive layer in the bending area (BA). Accordingly, there is an effect of improving the quality of the flexible display device (100, 200, 300, 400) by reducing the peeling defect of the bending area (BA). (Fig. 6)

No. of Pages : 83 No. of Claims : 13

(12) PATENT APPLICATION PUBLICATION
(19) INDIA
(22) Date of filing of Application :16/12/2020
(21) Application No.202014054734 A
(43) Publication Date : 02/07/2021

(54) Title of the invention : DISPLAY DEVICE

(51) International classification	:G06F0003041000, G02B0027010000, G09F0009300000, B60K0035000000, G09G0005000000
(31) Priority Document No	:10-2019-0175565
(32) Priority Date	:26/12/2019
(33) Name of priority country	:Republic of Korea
(86) International Application No	:NA
Filing Date	:NA
(87) International Publication No	: NA
(61) Patent of Addition to Application Number	:NA
Filing Date	:NA
(62) Divisional to Application Number	:NA
Filing Date	:NA

(71)**Name of Applicant :**
1)LG Display Co., Ltd.
Address of Applicant :128, Yeoui-daero, Yeongdeungpo-gu, Seoul 07336, Republic of Korea Republic of Korea
(72)**Name of Inventor :**
1)SHIN Sang-Il
2)LEE Hyun-Gi
3)LEE Boo-Heung

(57) Abstract :
A light-emitting display device configured such that an area in which particles are generated is determined in an inspection process after formation of a light-emitting device (OLED) and correspondingly a cover pattern is formed and a method of manufacturing the same. The particles are prevented from serving as a permeation path of impurities, whereby reliability of the light-emitting display device is improved. REF. FIG: 1

No. of Pages : 30 No. of Claims : 18

(12) PATENT APPLICATION PUBLICATION
(19) INDIA
(22) Date of filing of Application :16/12/2020

(21) Application No.202014054747 A
(43) Publication Date : 02/07/2021

(54) Title of the invention : CONTROL SYSTEM AND METHOD FOR A VEHICLE SYSTEM

(51) International classification	:B60W0010260000, G01C0021340000, B61L0027000000, B60W0020100000, B60W0020130000
(31) Priority Document No	:16/727,253
(32) Priority Date	:26/12/2019
(33) Name of priority country	:U.S.A.
(86) International Application No	:NA
Filing Date	:NA
(87) International Publication No	: NA
(61) Patent of Addition to Application Number	:NA
Filing Date	:NA
(62) Divisional to Application Number	:NA
Filing Date	:NA

(71)**Name of Applicant :**
1)Transportation IP Holdings, LLC
Address of Applicant :901 Main Avenue Norwalk Connecticut U.S.A. 06851 U.S.A.
(72)**Name of Inventor :**
1)Gayathri, Seenumani
2)James D. Brooks

(57) Abstract :
ABSTRACT CONTROL SYSTEM AND METHOD FOR A VEHICLE SYSTEM A system and method generate a trip plan for a trip of a vehicle system along a route. The usage of an engine during the trip is determined based on engine operational parameters, energy storage device operational parameters, and one or more objectives of the trip desired to be achieved. The usage of the energy storage device during the trip is also determined based on the engine operational parameters, the energy storage device operational parameters, and the one or more objective, including when to charge or discharge the energy storage device during the trip.

No. of Pages : 45 No. of Claims : 20

(12) PATENT APPLICATION PUBLICATION
(19) INDIA
(22) Date of filing of Application :17/12/2020
(21) Application No.202014054973 A
(43) Publication Date : 02/07/2021

(54) Title of the invention : OIL PUMP AND SCROLL COMPRESSOR

(51) International classification	:F04C0018020000, F04D0029520000, F01M0001020000, F04C0015060000, F04C0015000000
(31) Priority Document No	:CN201911422757.9
(32) Priority Date	:31/12/2019
(33) Name of priority country	:China
(86) International Application No	:NA
Filing Date	:NA
(87) International Publication No	: NA
(61) Patent of Addition to Application Number	:NA
Filing Date	:NA
(62) Divisional to Application Number	:NA
Filing Date	:NA

(71)**Name of Applicant :**
1)DANFOSS (TIANJIN) LTD.
Address of Applicant :No. 5 Fuyuan Road, Wuqing Development Area, Tianjin, 301700, China China
(72)**Name of Inventor :**
1)REN, Liqian
2)JIN, Jian
3)ZHAO, Jing
4)ZHAO, Yanbo

(57) Abstract :
The present invention provides a vertical, axial flow oil pump (10). The oil pump includes: a casing (11), the casing having a cylindrical shape as a whole and being able to rotate around its own central axis (O); a suction port (12), located at a lower end of the casing in an axial direction, and configured to suck oil into the oil pump; a discharge port (13), located at an upper end of the casing in the axial direction, and configured to discharge the oil from the oil pump to outside; and an impeller (14), provided in and formed integrally with the casing. The impeller rotates together with the casing when the casing rotates, so that the oil is flowed from the suction port to the discharge port. The present invention also provides a scroll compressor having the oil pump.

No. of Pages : 19 No. of Claims : 9

(12) PATENT APPLICATION PUBLICATION
(19) INDIA
(22) Date of filing of Application :17/12/2020
(21) Application No.202014054992 A
(43) Publication Date : 02/07/2021

(54) Title of the invention : EXHAUST GAS PURIFICATION CATALYST

(51) International classification	:B01D0053940000, B01J0023630000, B01J0037020000, B01J0035000000, B01J0023000000
(31) Priority Document No	:2019-235839
(32) Priority Date	:26/12/2019
(33) Name of priority country	:Japan
(86) International Application No	:NA
Filing Date	:NA
(87) International Publication No	: NA
(61) Patent of Addition to Application Number	:NA
Filing Date	:NA
(62) Divisional to Application Number	:NA
Filing Date	:NA

(71)**Name of Applicant :**
1)TOYOTA JIDOSHA KABUSHIKI KAISHA
Address of Applicant :1, Toyota-cho, Toyota-shi, Aichi 471-8571, Japan Japan
2)CATALER CORPORATION
(72)**Name of Inventor :**
1)Isao CHINZEI
2)Seiji NAKAHIGASHI
3)Shogo SHIRAKAWA
4)Hiromasa SUZUKI
5)Masahide MIURA
6)Takahiro NISHIO
7)Norimichi SHIMANO
8)Hiroki NIHASHI
9)Hiromi TOGASHI
10)Mitsuyoshi OKADA
11)Takashi ONOZUKA
12)Souta AKIYAMA
13)Isao NAITO

(57) Abstract :
ABSTRACT EXHAUST GAS PURIFICATION CATALYST The present disclosure provides an exhaust gas purification catalyst having an improved low-temperature activity, which comprises a substrate and a catalyst coat layer formed on the substrate, wherein the catalyst coat layer contains Rh fine particles and a promoter comprising a Ce-Zr-based composite oxide and a Zr-based composite oxide not containing cerium oxide, wherein the Rh fine particles have an average particle size measured by a transmission electron microscope observation of 1.0 nm or more to 2.0 nm or less, and a standard deviation s of the particle size of 0.8 nm or less, and wherein the Rh fine particles are supported on each of the Ce-Zr-based composite oxide and the Zr-based composite oxide not containing cerium oxide.

No. of Pages : 25 No. of Claims : 1

(12) PATENT APPLICATION PUBLICATION
(19) INDIA
(22) Date of filing of Application :18/12/2020
(21) Application No.202014055165 A
(43) Publication Date : 02/07/2021

(54) Title of the invention : DISPLAY DEVICE

(51) International classification	:G06F0003041000, G02B0027010000, G09F0009300000, B60K0035000000, G09G0005000000
(31) Priority Document No	:10-2019-0175531
(32) Priority Date	:26/12/2019
(33) Name of priority country	:Republic of Korea
(86) International Application No	:NA
Filing Date	:NA
(87) International Publication No	: NA
(61) Patent of Addition to Application Number	:NA
Filing Date	:NA
(62) Divisional to Application Number	:NA
Filing Date	:NA

(71)**Name of Applicant :**
1)LG DISPLAY CO., LTD.
Address of Applicant :128, Yeoui-daero, Yeongdeungpo-gu, Seoul 07336, Republic of Korea Republic of Korea
(72)**Name of Inventor :**
1)KIM, Jun Su
2)CHAE, Jae Kwon

(57) Abstract :
A display device according to an embodiment of the present disclosure includes a display panel (100) configured to display an image using a plurality of pixels (S2460), a timing controller (130) configured to generate an embedded clock point-to-point interface (EPI) data signal according to an EPI protocol, a display panel driver (110) configured to write pixel data of an input image onto the plurality of pixels based on the EPI data signal (S2450), a wireless signal detection unit (200) configured to detect an electromagnetic wave signal (S2410) surrounding the display device and convert the detected electromagnetic wave signal (S2410) into an electric signal (S2420), and a detection signal output unit (300) configured to compare the electric signal (S2420) with a reference signal (S2430) and output a detection signal according to a comparison result (S2440), wherein the timing controller (130) converts a preset signal characteristic of the EPI data signal (S2450) according to the detection signal and outputs the EPI data signal (S2450)

No. of Pages : 60 No. of Claims : 17

(12) PATENT APPLICATION PUBLICATION
(19) INDIA
(22) Date of filing of Application :18/12/2020
(21) Application No.202014055310 A
(43) Publication Date : 02/07/2021

(54) Title of the invention : A SYSTEM AND METHOD FOR MONITORING A COGNITIVE STATE OF A RIDER OF A VEHICLE

(51) International classification	:B60W0040080000, G06K0009000000, B62J0027000000, B62J0017040000, B62J0045200000
(31) Priority Document No	:16/728001
(32) Priority Date	:27/12/2019
(33) Name of priority country	:U.S.A.
(86) International Application No	:NA
Filing Date	:NA
(87) International Publication No	: NA
(61) Patent of Addition to Application Number	:NA
Filing Date	:NA
(62) Divisional to Application Number	:NA
Filing Date	:NA

(71)**Name of Applicant :**
1)ROBERT BOSCH GMBH
Address of Applicant :Postfach 30 02 20, 70442 Stuttgart, Germany Germany
(72)**Name of Inventor :**
1)BABU, Benzun Pious Wisely
2)REN, Liu
3)GHAFFARZADEGAN, Shabnam
4)DAI, Zeng

(57) Abstract :
A SYSTEM AND METHOD FOR MONITORING A COGNITIVE STATE OF A RIDER OF A VEHICLE A helmet (101, 200) includes one or more sensors located in the helmet (101, 5 200) and configured to obtain cognitive-load data indicating a cognitive load of a rider of a vehicle, a wireless transceiver in communication with the vehicle, a controller in communication with the one or more sensors and the wireless transceiver, wherein the controller is configured to determine a cognitive load of the occupant utilizing at least the cognitive-load data and send a wireless command to the vehicle utilizing the 10 wireless transceiver to execute commands to adjust a driver assistance function when the cognitive load is above a threshold.

No. of Pages : 26 No. of Claims : 20

(12) PATENT APPLICATION PUBLICATION
(21) Application No.202014055317 A
(19) INDIA
(22) Date of filing of Application :18/12/2020
(43) Publication Date : 02/07/2021

(54) Title of the invention : VEHICLE TRAVEL CONTROL SYSTEM, VEHICLE, AND VEHICLE TRAVEL CONTROL METHOD

(51) International classification	:G05D0001020000, B60W0020500000, B60W0010040000, H01M0010635000, F16H0059040000
(31) Priority Document No	:2019-236453
(32) Priority Date	:26/12/2019
(33) Name of priority country	:Japan
(86) International Application No	:NA
Filing Date	:NA
(87) International Publication No	: NA
(61) Patent of Addition to Application Number	:NA
Filing Date	:NA
(62) Divisional to Application Number	:NA
Filing Date	:NA

(71)**Name of Applicant :**
1)TOYOTA JIDOSHA KABUSHIKI KAISHA
Address of Applicant :1, Toyota-cho, Toyota-shi, Aichi-ken, 471-8571, Japan Japan
(72)**Name of Inventor :**
1)KIKUCHI, Yoshiaki
2)MATSUMOTO, Junichi
3)UOTANI, Akio

(57) Abstract :
VEHICLE TRAVEL CONTROL SYSTEM, VEHICLE, AND VEHICLE TRAVEL CONTROL METHOD A travel control system for a vehicle and the vehicle includes a battery pack (1). The battery pack (1) includes a battery (10), a current sensor (22) configured to detect a current that is charged and discharged to and from the battery (10), and a first control device that monitors a state of the battery (10). The travel control system includes a rotary electric machine configured to consume electric power to generate a driving force and configured to generate electric power, a power conversion device electrically connected between the battery (10) and the rotary electric machine and a second control device. Selected Drawing: FIG. 2

No. of Pages : 31 No. of Claims : 5

(12) PATENT APPLICATION PUBLICATION
(19) INDIA
(22) Date of filing of Application :19/12/2020
(21) Application No.202014055387 A
(43) Publication Date : 02/07/2021

(54) Title of the invention : POLYPEPTIDES WITH LIPASE ACTIVITY AND USES THEREOF

(51) International classification	:C12N0009200000, C12Q0001440000, C12N0009800000, C12P0007620000, C07K0016000000
(31) Priority Document No	:10201914033Y
(32) Priority Date	:31/12/2019
(33) Name of priority country	:Singapore
(86) International Application No	:NA
Filing Date	:NA
(87) International Publication No	: NA
(61) Patent of Addition to Application Number	:NA
Filing Date	:NA
(62) Divisional to Application Number	:NA
Filing Date	:NA

(71)**Name of Applicant :**
1)Wilmar International Limited
Address of Applicant :56 Neil Road, Singapore 088830, Singapore Singapore
(72)**Name of Inventor :**
1)YANG, Ren Liang
2)ZHANG, Hong Fang
3)YE, Weijian
4)NG, Mong Jie Andre
5)NGUYEN, Kien Truc Giang

(57) Abstract :
POLYPEPTIDES WITH LIPASE ACTIVITY AND USES THEREOF Described are methods of using a lipase for hydrolysis and esterification. In a first method of producing a medium chain fatty acid by hydrolysis, the method comprises 5 providing a polypeptide with at least 90% degree of identity to SEQ ID No. 3, and contacting the polypeptide with a medium chain fatty acid ester and water to produce the medium chain fatty acid. In a second method of forming an ester, the method comprises providing a polypeptide with at least 90% degree of identity to SEQ ID No. 3; and contacting the polypeptide with a long chain fatty acid, an alcohol, and water to 10 form the ester of the long chain fatty acid and the alcohol.

No. of Pages : 55 No. of Claims : 17

(12) PATENT APPLICATION PUBLICATION
(19) INDIA
(22) Date of filing of Application :21/12/2020
(21) Application No.202014055487 A
(43) Publication Date : 02/07/2021

(54) Title of the invention : TOUCH DISPLAY PANEL

(51) International classification	:G06F0003041000, G02F0001133300, G06F0003048800, G06F0003044000, G06F0003042000
(31) Priority Document No	:10-2019-0175554
(32) Priority Date	:26/12/2019
(33) Name of priority country	:Republic of Korea
(86) International Application No	:NA
Filing Date	:NA
(87) International Publication No	: NA
(61) Patent of Addition to Application Number	:NA
Filing Date	:NA
(62) Divisional to Application Number	:NA
Filing Date	:NA

(71)**Name of Applicant :**
1)LG Display Co., Ltd.
Address of Applicant :128, Yeoui-daero, Yeongdeungpo-gu, Seoul 07336, Republic of Korea, Republic of Korea
(72)**Name of Inventor :**
1)LEE, Jin-Bok
2)BANG, Jung-Ho
3)LEE, Seong-Joo

(57) Abstract :
Disclosed is a touch display panel (10) including a display unit(DP) including a plurality of pixels (P), an encapsulation unit (300) disposed on the display unit(DP), a touch sensor unit (400) including a plurality of touch sensors disposed on the encapsulation unit (300), a color filter layer (500) disposed on the touch sensor unit (400), the color filter layer (500) including a color filter (CF) and a black matrix (BM), a touch routing line (RL, RL1, RL2, and RL3) and a touch pad (T-PD) connected to each of the touch sensors, a crack prevention layer (140) disposed in a bending area (BD) between the touch routing line (RL, RL1, RL2, and RL3) and the touch pad (T-PD), a touch link line (132) configured to interconnect the touch routing line (RL, RL1, RL2, and RL3) and the touch pad (T-PD) via the lower part of the crack prevention layer (140) in the bending area (BD), and a touch passivation layer (440) disposed on each of the touch sensors and the touch link line (132). Ref.: Figure 1

No. of Pages : 59 No. of Claims : 11

(12) PATENT APPLICATION PUBLICATION
(21) Application No.202014055516 A
(19) INDIA
(22) Date of filing of Application :21/12/2020
(43) Publication Date : 02/07/2021

(54) Title of the invention : SHIFT REGISTER CIRCUIT AND LIGHT EMITTING DISPLAY DEVICE INCLUDING THE SHIFT REGISTER CIRCUIT

(51) International classification	:G11C0019280000, G09G0003360000, H01L0027320000, G11C0019180000, B60K0035000000
(31) Priority Document No	:10-2019-0179488
(32) Priority Date	:31/12/2019
(33) Name of priority country	:Republic of Korea
(86) International Application No	:NA
Filing Date	:NA
(87) International Publication No	: NA
(61) Patent of Addition to Application Number	:NA
Filing Date	:NA
(62) Divisional to Application Number	:NA
Filing Date	:NA

(71)**Name of Applicant :**
1)LG Display Co., Ltd.
Address of Applicant :128, Yeoui-daero, Yeongdeungpo-gu. Seoul, 07336, Republic of Korea Republic of Korea
(72)**Name of Inventor :**
1)Jo, SungHak

(57) Abstract :
SHIFT REGISTER CIRCUIT AND LIGHT EMITTING DISPLAY DEVICE INCLUDING THE SHIFT REGISTER CIRCUIT • A shift register circuit (131) comprises a shift register (SR), and a signal output circuit (OUTC[i]) including J number of scan signal output circuits (J is an integer of 2 or more) operating by being connected with the shift register (SR) to respectively output J number of scan signals. The J number of scan signal output circuits share a first QB node (QB_O) and a second QB node (QB_E) of the shift register (SR), a common output terminal (SRO) of the shift register (SR), and a first voltage line (VDD), operate based on a potential of the first QB node (QB_O), a potential of the second QB node (QB_E), a common output signal output through the common output terminal (SRO), a first voltage transferred through the first voltage line (VDD), and an Ith clock signal transferred through an Ith clock signal line (Clki), and output the J number of scan signals through output terminals which are respectively divided. REF. FIG.: 1

No. of Pages : 42 No. of Claims : 7

(12) PATENT APPLICATION PUBLICATION
(19) INDIA
(22) Date of filing of Application :21/12/2020
(21) Application No.202014055562 A
(43) Publication Date : 02/07/2021

(54) Title of the invention : DISPLAY DEVICE

(51) International classification	:G06F0003041000, G02B0027010000, G09F0009300000, B60K0035000000, G09G0005000000
(31) Priority Document No	:10-2019-0178201
(32) Priority Date	:30/12/2019
(33) Name of priority country	:Republic of Korea
(86) International Application No	:NA
Filing Date	:NA
(87) International Publication No	: NA
(61) Patent of Addition to Application Number	:NA
Filing Date	:NA
(62) Divisional to Application Number	:NA
Filing Date	:NA

(71)**Name of Applicant :**
1)LG Display Co., Ltd.
Address of Applicant :128, Yeoui-daero, Yeongdeungpo-gu, Seoul, Korea 07336 Republic of Korea
(72)**Name of Inventor :**
1)Yun, Junwoo
2)Kim, Taegung

(57) Abstract :
DISPLAY DEVICE • According to an aspect of the present disclosure, a display device (100) includes a display panel (110) which 5 includes a plurality of pixels (PX); a threshold voltage sensing unit (150) which senses a threshold voltage of a light emitting diode included in the plurality of pixels (PX); a data compensating unit (160) which corrects a data signal (Data) in accordance with a variation of the threshold 10 voltage and accumulated data to generate a corrected data signal (CData); and a data driver (120) which generates a data voltage (Vdata) in accordance with the corrected data signal (CData) to output the data voltage (Vdata) to the display panel (110), in which the data compensating unit 15 (160) periodically corrects the data signal (Data) in accordance with a look-up table in which a relationship of the variation of the threshold voltage and the accumulated data is described during an aging period to generate the corrected data signal (CData), thereby improving an image 20 quality. Ref.: Figure 1

No. of Pages : 87 No. of Claims : 16

(12) PATENT APPLICATION PUBLICATION
(21) Application No.202014055563 A
(19) INDIA
(22) Date of filing of Application :21/12/2020
(43) Publication Date : 02/07/2021

(54) Title of the invention : DISPLAY APPARATUS HAVING AN OXIDE SEMICONDUCTOR PATTERN

(51) International classification	:H01L0027120000, H01L0029786000, H01L0027320000, B32B0027080000, H01L0029240000
(31) Priority Document No	:10-2019-0180183
(32) Priority Date	:31/12/2019
(33) Name of priority country	:Republic of Korea
(86) International Application No	:NA
Filing Date	:NA
(87) International Publication No	: NA
(61) Patent of Addition to Application Number	:NA
Filing Date	:NA
(62) Divisional to Application Number	:NA
Filing Date	:NA

(71)**Name of Applicant :**
1)LG Display Co., Ltd.
Address of Applicant :128, Yeoui-daero, Yeongdeungpo-gu, Seoul 07336, Republic of Korea Republic of Korea
(72)**Name of Inventor :**
1)KIM Ki-Tae
2)NOH So-Young
3)CHUNG Ui-Jin
4)MOON Kyeong-Ju
5)JI Hyuk

(57) Abstract :
DISPLAY APPARATUS HAVING AN OXIDE SEMICONDUCTOR PATTERN • A display apparatus in which a thin film transistor (200) includes an oxide semiconductor pattern (210) is disclosed. A gate electrode (230) of the thin film transistor (200) may overlap a channel region (210C) of the oxide semiconductor pattern (210). The gate electrode (230) may have a structure in which a hydrogen barrier layer (231, 513a) and a low-resistance electrode layer (232, 513b) are stacked. A light-emitting device (300) and an encapsulating element (400) may be sequentially stacked on the thin film transistor (200). A thickness of the hydrogen barrier layer (231, 513a) may be determined by a content of hydrogen per unit area of the encapsulating element (400). Thus, in the display apparatus, the characteristics deterioration of the thin film transistor (200) due to hydrogen diffused from the encapsulating element (400) may be prevented. Fig. 1

No. of Pages : 54 No. of Claims : 17

(12) PATENT APPLICATION PUBLICATION
(19) INDIA
(22) Date of filing of Application :21/12/2020
(21) Application No.202014055564 A
(43) Publication Date : 02/07/2021

(54) Title of the invention : FOLDABLE DISPLAY DEVICE

(51) International classification	:G06F0001160000, G09F0009300000, H01L0051000000, H01L0027320000, H01L0051520000
(31) Priority Document No	:10-2019-0175315
(32) Priority Date	:26/12/2019
(33) Name of priority country	:Republic of Korea
(86) International Application No	:NA
Filing Date	:NA
(87) International Publication No	: NA
(61) Patent of Addition to Application Number	:NA
Filing Date	:NA
(62) Divisional to Application Number	:NA
Filing Date	:NA

(71)**Name of Applicant :**
1)LG Display Co., Ltd.
Address of Applicant :128, Yeoui-daero, Yeongdeungpo-gu, Seoul, Korea 07336 Republic of Korea
(72)**Name of Inventor :**
1)Seo, JungMin

(57) Abstract :
FOLDABLE DISPLAY DEVICE • According to an aspect of the present disclosure, a foldable display device 5 (100) includes a display panel (110) including a plurality of display areas (AA) divided by at least one or more folding lines (FL); and a plurality of data integrated circuits (130) outputting a data voltage (VDATA) to the plurality of display areas (AA) respectively, wherein each of the plurality of data integrated circuits (130) includes at least one or more gamma voltage generators (133a and 133b) outputting a plurality of 10 gamma voltages, wherein the at least one or more gamma voltage generators (133a and 133b) are connected by an external gamma line (OGL), so that boundaries between the display areas (AA) may be minimized. REF. FIG. 6

No. of Pages : 39 No. of Claims : 14

(12) PATENT APPLICATION PUBLICATION
(19) INDIA
(22) Date of filing of Application :22/12/2020
(21) Application No.202014055772 A
(43) Publication Date : 02/07/2021

(54) Title of the invention : ORGANIC LIGHT-EMITTING DIODE DISPLAY DEVICE AND DRIVING METHOD THEREOF

(51) International classification	:H01L0027320000, G09G0003323300, H01L0051520000, G09G0003320800, H01L0051000000
(31) Priority Document No	:10-2019-0179967
(32) Priority Date	:31/12/2019
(33) Name of priority country	:Republic of Korea
(86) International Application No	:NA
Filing Date	:NA
(87) International Publication No	: NA
(61) Patent of Addition to Application Number	:NA
Filing Date	:NA
(62) Divisional to Application Number	:NA
Filing Date	:NA

(71)**Name of Applicant :**
1)LG DISPLAY CO., LTD.
Address of Applicant :128, Yeoui-daero, Yeongdeungpo-gu, Seoul 07336, Republic of Korea Republic of Korea
(72)**Name of Inventor :**
1)Nam, Yousung
2)Kwon, Youngchul

(57) Abstract :
Disclosed herein are an organic light-emitting diode display device and a driving method thereof, the organic light-emitting diode display device, including: a display panel (10) in which pixels adjacent to each other are paired and arranged to share a single data line (DL1 to DLm) in pixel areas defined by a plurality of gate and data lines (GL1 to GLn) and (DL1 to DLm); a gate driver (200) configured to drive the plurality of gate lines (GL1 to GLn); a data driver (300) configured to output a data voltage to data voltage output channels on the basis of an arrangement of pixels; a data switcher (100) configured to alternately select a data line (DLm) and to electrically connect the data line (DLm) with the data voltage output channel of the data driver; and a timing controller (500) configured to control to the data switcher (100) and the gate and data drivers (200 and 300), thereby making it possible to drive a data driving circuit (300) at high driving frequency and to prevent a deterioration of image quality and image distortion even in a simplified structure of the data driving circuit (300). REF. FIG. 1

No. of Pages : 27 No. of Claims : 16

(12) PATENT APPLICATION PUBLICATION
(21) Application No.202014055782 A
(19) INDIA
(22) Date of filing of Application :22/12/2020
(43) Publication Date : 02/07/2021

(54) Title of the invention : ANTENNA MODULE AND ELECTRONIC DEVICE USING THE SAME

(51) International classification	:H01Q0001240000, H01Q0001220000, H01Q0007060000, H01Q0001380000, H01L0029786000	(71)**Name of Applicant :** **1)Samsung Electronics Co., Ltd.** Address of Applicant :129, Samsung-ro, Yeongtong-gu, Suwon-si, Gyeonggi-do, 16677, Republic of Korea Republic of Korea
(31) Priority Document No	:10-2019-0175616	(72)**Name of Inventor :**
(32) Priority Date	:26/12/2019	**1)Namjun CHO**
(33) Name of priority country	:Republic of Korea	**2)Hyoseok NA**
(86) International Application No	:NA	**3)Yousung LEE**
Filing Date	:NA	
(87) International Publication No	: NA	
(61) Patent of Addition to Application Number	:NA	
Filing Date	:NA	
(62) Divisional to Application Number	:NA	
Filing Date	:NA	

(57) Abstract :
ANTENNA MODULE AND ELECTRONIC DEVICE USING THE SAME A portable communication device includes a processor positioned in a first printed circuit board; a communication circuit; and an antenna module. The antenna module includes a second printed circuit board; a first antenna and a second antenna positioned in the second printed circuit board; a first transmission-reception circuit positioned in the second printed circuit board. The first transmission-reception circuit comprises a power amplifier for amplifying a signal to be transmitted through the first antenna, and a first low noise amplifier for amplifying a signal received through the first antenna. The power amplifier forms a portion of a transmission path electrically connected with the communication circuit and the first antenna. The first low noise amplifier forms a portion of a first reception path electrically connected with the communication circuit and the first antenna. The transmission path or the first reception path in the first transmission-reception circuit is selectively provided by the communication circuit. The portable communication device also includes a first reception circuit positioned in the second printed circuit board, wherein the first reception circuit does not comprise a power amplifier for amplifying a signal to be transmitted through the second antenna, and comprises a second low noise amplifier for amplifying a signal received through the second antenna, the second low noise amplifier forming a portion of a second reception path electrically connected with the communication circuit and the second antenna

No. of Pages : 109 No. of Claims : 15

(12) PATENT APPLICATION PUBLICATION
(19) INDIA
(22) Date of filing of Application :22/12/2020
(21) Application No.202014055794 A
(43) Publication Date : 02/07/2021

(54) Title of the invention : DISK BRAKE STRUCTURE

(51) International classification	:F16D0065097000, F16D0125360000, F16D0065180000, B61H0005000000, F16D0065120000
(31) Priority Document No	:2019-238387
(32) Priority Date	:27/12/2019
(33) Name of priority country	:Japan
(86) International Application No	:NA
Filing Date	:NA
(87) International Publication No	: NA
(61) Patent of Addition to Application Number	:NA
Filing Date	:NA
(62) Divisional to Application Number	:NA
Filing Date	:NA

(71)**Name of Applicant :**
1)HONDA MOTOR CO., LTD.
Address of Applicant :1-1, Minami-Aoyama 2-chome, Minato-ku, Tokyo, 107-8556 Japan Japan
(72)**Name of Inventor :**
1)MINAMI Hiroki
2)ASHIGAI Takashi
3)IIDA Chihiro
4)IGUCHI Kazunari
5)TOYODA Hidetoshi
6)KOFUJI Kenji

(57) Abstract :
In each friction material (25) of a pair of left and right brake pads (20), a disk rotation entry side end portion (25b) of the friction material (25) is disposed on a disk rotation exit side (FWD) than a disk rotation entry side end portion (13b2) of the most 5 entry side piston (13b1) of a brake caliper, and an edge length of the disk rotation entry side end portion (25b) of the friction material (25) is greater than an edge length of a disk rotation entry side end portion (21e) of a back plate (21). A tapered section (21b) having a width that narrows in a disk radial direction is provided on a disk rotation entry side (FWU) of the back plate (21) of the brake pad (20), and in each of the pair of left 10 and right frictional material (25), the disk rotation entry side end portion (25b) of the friction material (25) is disposed on the disk rotation exit side (FWD) than the tapered section (21 b).

No. of Pages : 33 No. of Claims : 5

(12) PATENT APPLICATION PUBLICATION
(19) INDIA
(22) Date of filing of Application :22/12/2020
(21) Application No.202014055795 A
(43) Publication Date : 02/07/2021

(54) Title of the invention : SECURE NETWORK OF SAFETY PLCS FOR INDUSTRIAL PLANTS

(51) International classification	:H04L0029060000, G05B0019050000, H04W0012080000, G02B0006120000, B01D0053560000
(31) Priority Document No	:62/955,776
(32) Priority Date	:31/12/2019
(33) Name of priority country	:U.S.A.
(86) International Application No	:NA
Filing Date	:NA
(87) International Publication No	: NA
(61) Patent of Addition to Application Number	:NA
Filing Date	:NA
(62) Divisional to Application Number	:NA
Filing Date	:NA

(71)**Name of Applicant :**
1)Schneider Electric Systems USA, Inc.
Address of Applicant :38 Neponset Avenue, C42-12, Foxboro, Massachusetts 02035, USA U.S.A.
(72)**Name of Inventor :**
1)Mishra, Ajay
2)Ivanov, Diana
3)Banchik, Erna

(57) Abstract :
Network of safety PLCs employs multi-PLC verification of a programming application before allowing the application to reprogram any PLC on the safety network. Each PLC on the safety network is equipped with authentication capability that detects attempts to reprogram the PLC and issues an authentication challenge requiring the programming application to process a proof-of-work. The authentication challenge is also sent to other PLCs on the safety network along with the response from the programming application for verification purposes. The other PLCs process the authentication challenge and check the response from the programming application for acceptability. If a majority of the PLCs on the safety network determines the response from the programming application is correct, then the programming application is verified and may proceed with the reprogramming. Such group authentication requires a malicious application to hijack multiple PLCs concurrently on the safety network, a highly unlikely outcome, before reprogramming any PLC.

No. of Pages : 27 No. of Claims : 20

(12) PATENT APPLICATION PUBLICATION
(19) INDIA
(22) Date of filing of Application :22/12/2020
(21) Application No.202014055899 A
(43) Publication Date : 02/07/2021

(54) Title of the invention : FASTENER ASSEMBLY

(51) International classification	:F16B0005020000, B65D0033250000, B29C0044120000, F16B0037140000, A61F0002360000
(31) Priority Document No	:201911354454.8
(32) Priority Date	:25/12/2019
(33) Name of priority country	:China
(86) International Application No	:NA
Filing Date	:NA
(87) International Publication No	: NA
(61) Patent of Addition to Application Number	:NA
Filing Date	:NA
(62) Divisional to Application Number	:NA
Filing Date	:NA

(71)**Name of Applicant :**
1)ILLINOIS TOOL WORKS INC.
Address of Applicant :155 Harlem Avenue Glenview, Illinois 60025, United States of America U.S.A.
(72)**Name of Inventor :**
1)WANG, Xing
2)SUN, Mengli

(57) Abstract :
The present disclosure provides a fastener for supporting and connecting 5 two electric connectors. The fastener comprises a support portion provided with a support surface on a top portion thereof, a connecting hole penetrating the support surface and extending into the support portion, and a pair of clamping shoulders respectively arranged on opposing first and second sides of the support portion. The pair of clamping shoulders are made of a first elastic material at least at top 10 portions thereof such that, when the fastener is mounted in a receiving slot of a fastener receiving member, the pair of clamping shoulders can be pressed against the fastener receiving member to provide an amount of elastic deformation, which enables the fastener to move a certain distance toward the electric connectors relative to the fastener receiving member when the fastener is connected to the 15 electric connectors.

No. of Pages : 36 No. of Claims : 15

(12) PATENT APPLICATION PUBLICATION
(19) INDIA
(22) Date of filing of Application :23/12/2020
(21) Application No.202014055963 A
(43) Publication Date : 02/07/2021

(54) Title of the invention : CAMERA MODULE, CAMERA ASSEMBLY, AND ELECTRONIC DEVICE

(51) International classification	:H04N0005225000, H04M0001020000, F21V0008000000, G02B0007020000, H04N0005232000
(31) Priority Document No	:201922379829.8
(32) Priority Date	:25/12/2019
(33) Name of priority country	:China
(86) International Application No	:NA
Filing Date	:NA
(87) International Publication No	: NA
(61) Patent of Addition to Application Number	:NA
Filing Date	:NA
(62) Divisional to Application Number	:NA
Filing Date	:NA

(71)**Name of Applicant :**
1)GUANGDONG OPPO MOBILE TELECOMMUNICATIONS CORP., LTD.
Address of Applicant :NO. 18, HAIBIN ROAD, WUSHA, CHANG'AN, DONGGUAN, GUANGDONG 523860, CHINA China
(72)**Name of Inventor :**
1)CHEN, WEI

(57) Abstract :
A camera module (100), a camera assembly, and an electronic device are disclosed, which relate to the field of smart devices. The camera module (100) includes a first light-redirecting member (24); a lens assembly (30); an image receiver, and a focusing assembly (40). Light is transmitted from the first light-redirecting member (24) to the lens assembly (30) and further transmitted to the image receiver. The focusing assembly (40) comprises a second light-redirecting member (41) and a third light-redirecting member (42) configured to change a transmission distance of the light from the lens assembly (30) to the image receiver by redirecting the light. A relative displacement between the second light-redirecting member (41) and the third light-redirecting member (42) is adjustable. A direction in which the light is incident into the focusing assembly (40) is substantially parallel to a direction in which the light is exited out of the focusing assembly (40).

No. of Pages : 52 No. of Claims : 15

(12) PATENT APPLICATION PUBLICATION
(21) Application No.202014056047 A
(19) INDIA
(22) Date of filing of Application :23/12/2020
(43) Publication Date : 02/07/2021

(54) Title of the invention : PROCESS FOR PREPARING AN ALKOXYMETHYL ALKYNYL ETHER COMPOUND HAVING A TERMINAL TRIPLE BOND

(51) International classification	:C07F0007140000, C07C0045290000, C07F0007180000, C07F0007080000, C07C0043184000
(31) Priority Document No	:2019-235058
(32) Priority Date	:25/12/2019
(33) Name of priority country	:Japan
(86) International Application No	:NA
Filing Date	:NA
(87) International Publication No	: NA
(61) Patent of Addition to Application Number	:NA
Filing Date	:NA
(62) Divisional to Application Number	:NA
Filing Date	:NA

(71)**Name of Applicant :**
1)SHIN-ETSU CHEMICAL CO., LTD.
Address of Applicant :6-1, Ohtemachi 2-chome, Chiyoda-ku, Tokyo, 100-0004, Japan Japan
(72)**Name of Inventor :**
1)MIYAKE, Yuki
2)YAMASHITA, Miyoshi
3)KINSHO, Takeshi
4)BABA, Akihiro

(57) Abstract :
The present invention provides a process for preparing an alkoxymethyl alkynyl ether compound having a terminal triple bond of the following formula (4):H-CC(CH2)aOCH2OCH2R (4), wherein R represents a hydrogen atom, an n-alkyl group having 1 to 9 carbon atoms, or a phenyl group, and a • represents an integer of 1 to 10, the method comprising subjecting an alkynol compound having a terminal triple bond of the following formula (1): H-CC(CH2)aOH (1), wherein a • is as defined above, to an alkoxymethylation with a halomethyl alkyl ether compound of the following formula (3): RCH2OCH2X (3), wherein X represents a halogen atom, and R is as defined above, in the presence of a dialkylaniline compound of the following formula (2): [CH3(CH2)b][CH3(CH2)c]NC6H5 (2), wherein b and c represent, independently of each other, an integer of 0 to 9, to form the alkoxymethyl alkynyl ether compound (4) having a terminal triple bond.

No. of Pages : 38 No. of Claims : 9

(12) PATENT APPLICATION PUBLICATION
(19) INDIA
(22) Date of filing of Application :23/12/2020
(21) Application No.202014056081 A
(43) Publication Date : 02/07/2021

(54) Title of the invention : LOW LATENCY VARIABLE ROTATIONAL FREQUENCY MEASUREMENTS

(51) International classification	:H03L0007087000, F24F0011770000, H05K0007200000, H04L0007033000, H02P0009420000
(31) Priority Document No	:62/956,123
(32) Priority Date	:31/12/2019
(33) Name of priority country	:U.S.A.
(86) International Application No	:NA
Filing Date	:NA
(87) International Publication No	: NA
(61) Patent of Addition to Application Number	:NA
Filing Date	:NA
(62) Divisional to Application Number	:NA
Filing Date	:NA

(71)**Name of Applicant :**
1)Schneider Electric Systems USA, Inc.
Address of Applicant :38 Neponset Avenue, C42-12, Foxboro, Massachusetts 02035, USA U.S.A.
(72)**Name of Inventor :**
1)Saurabh, Anupam
2)Mishra, Ajay
3)ANSARI, Shahid

(57) Abstract :
Systems and methods for measuring rotational frequency in rotating machines use variable sliding windows of measurement. The systems and methods count and store the number of internal clock cycles between the start of a measurement interval and each pulse signal from a pulse generator. Rotational frequency is determined by taking a difference between the count for a most recent pulse signal and the count for some previous pulse signal within the measurement interval. The number of pulse signals that have occurred between the most-recent pulse signal and the previous pulse signal represents a window of measurement. This window of measurement, or the size thereof, may then be used along with the count difference to determine the rotational frequency. The window of measurement may then be slid to the counts for next most recent pulse signal and the next previous pulse signal to obtain a new count difference, and so on.

No. of Pages : 25 No. of Claims : 20

(12) PATENT APPLICATION PUBLICATION
(21) Application No.202014056092 A
(19) INDIA
(22) Date of filing of Application :23/12/2020
(43) Publication Date : 02/07/2021

(54) Title of the invention : TRANSPARENT DISPLAY DEVICE

(51) International classification	:G02B0027010000, G02F0001133570, H01L0051520000, H01L0027320000, F21V0008000000
(31) Priority Document No	:10-2019-0177848
(32) Priority Date	:30/12/2019
(33) Name of priority country	:Republic of Korea
(86) International Application No	:NA
Filing Date	:NA
(87) International Publication No	: NA
(61) Patent of Addition to Application Number	:NA
Filing Date	:NA
(62) Divisional to Application Number	:NA
Filing Date	:NA

(71)**Name of Applicant :**
1)LG Display Co., Ltd.
Address of Applicant :128, Yeoui-daero, Yeongdeungpo-gu, Seoul, 07336, Republic of Korea Republic of Korea
(72)**Name of Inventor :**
1)Shin, KiSeob
2)Kim, ChangSoo
3)Kim, EuiTae
4)Lee, Soyi

(57) Abstract :
TRANSPARENT DISPLAY DEVICE • A transparent display device (100) is disclosed, which may prevent a short circuit from occurring between first and second capacitor electrodes (C1; C2) of a capacitor (CST). The transparent display device (100) comprises a substrate (111) provided with a display area (DA) including a transmissive area (TA) and a non-transmissive area (NTA), in which a plurality of subpixels are disposed, and a non-display area (NDA) surrounding the display area (DA), a driving transistor (DT) provided in the non-transmissive area (NTA) over the substrate (111), including an active layer (ACT), a gate electrode (GE), a source electrode (SE) and a drain electrode (DE), and a capacitor (CST) provided in the non-transmissive area (NTA) over the substrate (111), including a first capacitor electrode (C1) and a second capacitor electrode (C2). The second capacitor electrode (C2) is not overlapped with the active layer (ACT) of the driving transistor (DT). REF. FIG.: 1

No. of Pages : 79 No. of Claims : 19

(12) PATENT APPLICATION PUBLICATION
(19) INDIA
(22) Date of filing of Application :24/12/2020
(21) Application No.202014056324 A
(43) Publication Date : 02/07/2021

(54) Title of the invention : INTAKE DUCT FOR AN INTERNAL COMBUSTION ENGINE

(51) International classification	:F02M0035100000, F02M0035120000, F02M0035080000, F02M0035104000, F02M0025022000
(31) Priority Document No	:2019-234159
(32) Priority Date	:25/12/2019
(33) Name of priority country	:Japan
(86) International Application No	:NA
Filing Date	:NA
(87) International Publication No	: NA
(61) Patent of Addition to Application Number	:NA
Filing Date	:NA
(62) Divisional to Application Number	:NA
Filing Date	:NA

(71)**Name of Applicant :**
1)SUZUKI MOTOR CORPORATION
Address of Applicant :300 Takatsuka-cho, Minami-ku, Hamamatsu-shi, Shizuoka 432-8611, Japan Japan
(72)**Name of Inventor :**
1)Atsumi MACHINO
2)Ayaka SHIRAI

(57) Abstract :
[Task] To provide an intake duct for an internal combustion engine capable of preventing ingress of water into an internal combustion engine during wading operations and of keeping supply of cold outside air to the engine during regular operations: [Solution] An intake duct for an internal combustion engine includes an upstream duct portion 11 having an air inlet 11a and an air outlet 11e; a downstream duct portion 12, and deflector plates 11b, 11c for deflecting a portion of air drawn through the air inlet 11a in a downward direction to bottom vents 11d, 12a. The downstream duct portion 12 is placed off to one side of the vertical plane (C) bisecting the air inlet 11a. The air outlet 11e of the upstream duct portion 11 is placed off to the opposite side of the vertical plane (C). The downstream duct portion 12 has an air inlet 12b lying next to the air outlet 11e. [Selected Figure] FIG. 5

No. of Pages : 28 No. of Claims : 4

(12) PATENT APPLICATION PUBLICATION
(21) Application No.202014056332 A
(19) INDIA
(22) Date of filing of Application :24/12/2020
(43) Publication Date : 02/07/2021

(54) Title of the invention : POLY(GLYCOLIC ACID) FOR CONTAINERS AND FILMS WITH REDUCED GAS PERMEABILITY

(51) International classification	:B29L0031000000, E21F0007000000, G01N0015080000, H01J0037340000, C08L0083040000	(71)**Name of Applicant :** **1)DAK AMERICAS LLC** Address of Applicant :7621 Little Ave., Suite 500, Charlotte, NC 28226, United States of America U.S.A.
(31) Priority Document No	:16/728,144	(72)**Name of Inventor :** **1)KEZIOS, Peter** **2)TAYLOR, Thomas**
(32) Priority Date	:27/12/2019	
(33) Name of priority country	:U.S.A.	
(86) International Application No	:NA	
Filing Date	:NA	
(87) International Publication No	: NA	
(61) Patent of Addition to Application Number	:NA	
Filing Date	:NA	
(62) Divisional to Application Number	:NA	
Filing Date	:NA	

(57) Abstract :
Compositions of high molecular weight poly(hydroxy acid) polymer having good thermal stability and a weight average molecular weight of >100,000 by GPC. The compositions include one or more chain-terminator compounds/impurities which may be incorporated into the polymer and rendered harmless by the presence of appropriate amounts of bi-functional and multi-functional polymerization initiators. A process including first mixing glycolic acid and/or lactic acid (with chain-terminators), and a diol or di-acid initiator, and at least one multifunctional initiator to form a liquid monomer mixture in an agitated polycondensation reactor. Next, polycondensing to form a liquid reaction mixture comprising a pre-polymer having a weight average molecular weight of >10,000 by GPC, and greater than 80% by mole hydroxyl or carboxyl end-group termination, then crystallizing to form a first solid reaction mixture. Then, solid state polycondensing the solid reaction mixture to form a solid reaction mixture having a moisture level less than 50 ppm by weight. Then, mixing the solid reaction mixture with an appropriate reactive coupling agent in a melting and mixing extruder to couple and form the reaction mixture and form the final poly(hydroxy acid) polymer.

No. of Pages : 72 No. of Claims : 14

(12) PATENT APPLICATION PUBLICATION
(19) INDIA
(22) Date of filing of Application :24/12/2020
(21) Application No.202014056342 A
(43) Publication Date : 02/07/2021

(54) Title of the invention : METHOD AND DEVICE FOR DISPLAYING 3D AUGMENTED REALITY NAVIGATION INFORMATION

(51) International classification	:G06T0019000000, G02B0027010000, G01C0021360000, G06F0003140000, A61B0090000000
(31) Priority Document No	:10-2020-0000329
(32) Priority Date	:02/01/2020
(33) Name of priority country	:Republic of Korea
(86) International Application No	:NA
Filing Date	:NA
(87) International Publication No	: NA
(61) Patent of Addition to Application Number	:NA
Filing Date	:NA
(62) Divisional to Application Number	:NA
Filing Date	:NA

(71)**Name of Applicant :**
1)SAMSUNG ELECTRONICS CO., LTD.
Address of Applicant :129, Samsung-ro, Yeongtong-gu, Suwon-si, Gyeonggi-do 16677, Republic of Korea Republic of Korea

(72)**Name of Inventor :**
1)Dohyoung KIM
2)Yongjun LIM
3)Jinah KONG
4)Kyusung KIM
5)Jaeyeon RHO
6)Juyeon YOU

(57) Abstract :
A device and a method are provided. The device (101) includes a communication module (190), a memory (130), and a processor (120), wherein the processor (120) is configured to acquire position information of a vehicle (201) via the communication module (190), determine whether high definition (HD) map information corresponding to the position information is acquired; display threedimensional (3D) navigation information in augmented reality by using the HD map information when the HD map information is acquired; and display two-dimensional (2D) navigation information in augmented reality when the HD map information is not acquired, wherein the 3D navigation information is information in which virtual 3D graphic information for driving guidance is spatially matched to and displayed on an actual object in the real world by using the HD map information, and the 2D navigation information is information in which virtual 2D graphic information for driving guidance is planarly matched to and displayed on an actual object in the real world. Various other embodiments are possible.

No. of Pages : 92 No. of Claims : 15

(12) PATENT APPLICATION PUBLICATION
(19) INDIA
(22) Date of filing of Application :24/12/2020
(21) Application No.202014056418 A
(43) Publication Date : 02/07/2021

(54) Title of the invention : METHOD FOR MANUFACTURING FASTENER STRINGER AND FASTENER CHAIN

(51) International classification	:A44B0019420000, A44B0019340000, B29D0005020000, A44B0019580000, F16B0035040000
(31) Priority Document No	:2019-238802
(32) Priority Date	:27/12/2019
(33) Name of priority country	:Japan
(86) International Application No	:NA
Filing Date	:NA
(87) International Publication No	: NA
(61) Patent of Addition to Application Number	:NA
Filing Date	:NA
(62) Divisional to Application Number	:NA
Filing Date	:NA

(71)**Name of Applicant :**
1)YKK CORPORATION
Address of Applicant :1, Kanda Izumi-cho, Chiyoda-ku, Tokyo 101-8642, Japan Japan
(72)**Name of Inventor :**
1)JYOGAN, Toshiyuki
2)SAITO, Takashi

(57) Abstract :
METHOD FOR MANUFACTURING FASTENER STRINGER AND 5 FASTENER CHAIN An object of present invention is, in a fastener stringer with a nonfluorine-based water repellent agent, to prevent an oil and fat from being adhered to the fastener stringer as much as possible, so that a deterioration in a water 10 repellent property after washing can be suppressed as much as possible. A method for manufacturing a fastener stringer according to the present invention, include, in addition to a dyeing step for dyeing a fastener stringer including an element row fixed to a side edge portion of a tape made of fiber, a dye cleaning step for removing excess dye from the fastener stringer, and a water repellent treatment step for 15 adhering a non-fluorine-based water repellent agent to the fastener stringer, a predyeing degreasing step for degreasing oil and fat adhered to the fastener stringer by a wet process. FIG. 1

No. of Pages : 25 No. of Claims : 10

(12) PATENT APPLICATION PUBLICATION
(19) INDIA
(22) Date of filing of Application :24/12/2020
(21) Application No.202014056424 A
(43) Publication Date : 02/07/2021

(54) Title of the invention : LOW-PRESSURE ACCUMULATOR AND VEHICLE BRAKING SYSTEM COMPRISING LOW-PRESSURE ACCUMULATOR

(51) International classification	:B60T0013140000, F15B0001100000, B60T0008480000, B60T0017020000, F16H0061409600
(31) Priority Document No	:201922372387.4
(32) Priority Date	:26/12/2019
(33) Name of priority country	:China
(86) International Application No	:NA
Filing Date	:NA
(87) International Publication No	: NA
(61) Patent of Addition to Application Number	:NA
Filing Date	:NA
(62) Divisional to Application Number	:NA
Filing Date	:NA

(71)**Name of Applicant :**
1)ROBERT BOSCH GMBH
Address of Applicant :Postfach 30 02 20, 70442 Stuttgart, Germany Germany
(72)**Name of Inventor :**
1)ZHOU, JoJo
2)HE, Yuhui

(57) Abstract :
LOW-PRESSURE ACCUMULATOR AND VEHICLE BRAKING SYSTEM COMPRISING LOW-PRESSURE ACCUMULATOR
The present application relates to a low-pressure accumulator for a vehicle 5 braking system, comprising a cylinder (10) having an inner surface (11) defining an internal space (R), a piston (20) accommodated in the internal space (R) of the cylinder (10) in such a way as to be capable of reciprocating in an axial direction (A) of the internal space (R), a spring (30) disposed between the piston (20) and an end cap (14) of the cylinder (10), a guide layer (40) disposed on an outer surface (21) of the piston 10 (20) and/or the inner surface (11) of the cylinder (10), and a sealing member (50) disposed in a sealing manner (50) between the outer surface (21) of the piston (20) and the inner surface (11) of the cylinder (10). The present application also provides a vehicle braking system comprising the low-pressure accumulator.

No. of Pages : 16 No. of Claims : 10

(12) PATENT APPLICATION PUBLICATION
(19) INDIA
(22) Date of filing of Application :24/12/2020
(21) Application No.202014056469 A
(43) Publication Date : 02/07/2021

(54) Title of the invention : SYSTEM AND METHOD FOR OPTIMIZING VIRTUAL WORLD COMPUTATIONS THROUGH AN N-TIER ARCHITECTURE

(51) International classification	:A63F0013300000, G06F0015160000, A63F0013358000, G06Q0040040000, G06F0016245300
(31) Priority Document No	:62/955239
(32) Priority Date	:30/12/2019
(33) Name of priority country	:U.S.A.
(86) International Application No	:NA
Filing Date	:NA
(87) International Publication No	: NA
(61) Patent of Addition to Application Number	:NA
Filing Date	:NA
(62) Divisional to Application Number	:NA
Filing Date	:NA

(71)**Name of Applicant :**
1)TMRW Foundation IP SARL
Address of Applicant :14-16, Avenue Pasteur, 2310 Luxembourg Luxembourg
(72)**Name of Inventor :**
1)CEVAT YERLI
2)PRASHANTH HIREMATADA

(57) Abstract :
SYSTEM AND METHOD FOR OPTIMIZING VIRTUAL WORLD COMPUTATIONS THROUGH AN N-TIER ARCHITECTURE Systems and methods for optimizing virtual world computations through an n-tier architecture including at least three tiers are provided. In a sample three-tier architecture, a first tier comprises a client software engine configured to receive input data, send the data to the second tier, and perform end-user processing. A second tier connects to the first tier and to a third tier through a network and comprises a client-dedicated module that is dynamically instantiated and which is configured to either prepare the received data for subsequent processing from the client software engine or send the received data to the third tier. The third tier comprises a virtual world processing module configured to receive and process data from the second tier, generating world state updates, and to dynamically instantiate the client-dedicated module to spawn client-dedicated instances. The world state updates are sent to corresponding client-dedicated module instances for further processing.

No. of Pages : 48 No. of Claims : 20

(12) PATENT APPLICATION PUBLICATION
(19) INDIA
(22) Date of filing of Application :24/12/2020
(21) Application No.202014056470 A
(43) Publication Date : 02/07/2021

(54) Title of the invention : METHOD AND SYSTEM FOR ENABLING ENHANCED USER-TO-USER COMMUNICATION IN DIGITAL REALITIES

(51) International classification	:H04W0036000000, G06F0021310000, H04Q0011040000, A61B0005000000, H04L0012260000	(71)**Name of Applicant :** **1)TMRW Foundation IP SARL** Address of Applicant :14-16, Avenue Pasteur, 2310 Luxembourg. Luxembourg (72)**Name of Inventor :** **1)CEVAT YERLI**
(31) Priority Document No	:62/955232	
(32) Priority Date	:30/12/2019	
(33) Name of priority country	:U.S.A.	
(86) International Application No	:NA	
Filing Date	:NA	
(87) International Publication No	: NA	
(61) Patent of Addition to Application Number	:NA	
Filing Date	:NA	
(62) Divisional to Application Number	:NA	
Filing Date	:NA	

(57) Abstract :
METHOD AND SYSTEM FOR ENABLING ENHANCED USER-TO-USER COMMUNICATION IN DIGITAL REALITIES A method for enabling the enhanced user-to-user communication in digital realities comprising generating a marker of a target user that is persistently applied on the target user; detecting, through a wireless network, the presence of a target user device and counterpart user device connected to the server via the wireless network; sending a notification to the counterpart user device informing about the presence of the target user device based on a set of rules; receiving one or more forms of interaction from the counterpart user device on the marker of the target user; opening up a communication channel between the counterpart user device and target user device; and receiving, processing and accordingly redirecting corresponding communications through and between the counterpart user device and target user device. A system thereof is also disclosed.

No. of Pages : 42 No. of Claims : 20

(12) PATENT APPLICATION PUBLICATION
(19) INDIA
(22) Date of filing of Application :24/12/2020

(21) Application No.202014056471 A
(43) Publication Date : 02/07/2021

(54) Title of the invention : CROSS-LINGUAL VOICE CONVERSION SYSTEM AND METHOD

(51) International classification	:G06F0040580000, G10L0013033000, G10L0021013000, G10L0015260000, G10L0021007000
(31) Priority Document No	:62/955227
(32) Priority Date	:30/12/2019
(33) Name of priority country	:U.S.A.
(86) International Application No	:NA
Filing Date	:NA
(87) International Publication No	: NA
(61) Patent of Addition to Application Number	:NA
Filing Date	:NA
(62) Divisional to Application Number	:NA
Filing Date	:NA

(71)**Name of Applicant :**
1)TMRW Foundation IP SARL
Address of Applicant :14-16, Avenue Pasteur, 2310 Luxembourg. Luxembourg
(72)**Name of Inventor :**
1)Cevat Yerli

(57) Abstract :
CROSS-LINGUAL VOICE CONVERSION SYSTEM AND METHOD A cross-lingual voice conversion system and method comprises a voice feature extractor configured to receive a first voice audio segment in a first language and a second voice audio segment in a second language, and extract, respectively, audio features comprising first-voice, speaker-dependent acoustic features and second-voice, speaker-independent linguistic features. One or more generators are configured to receive extracted features, and produce therefrom a third voice candidate keeping the first-voice, speaker-dependent acoustic features and the second-voice, speaker-independent linguistic features, wherein the third voice candidate speaks the second language. One or more discriminators are configured to compare the third voice candidate with the ground truth data, and provide results of the comparison back to the generator for refining the third voice candidate.

No. of Pages : 39 No. of Claims : 20

(12) PATENT APPLICATION PUBLICATION
(19) INDIA
(22) Date of filing of Application :25/12/2020
(21) Application No.202014056482 A
(43) Publication Date : 02/07/2021

(54) Title of the invention : SYSTEM AND METHOD ENABLING A COLLABORATIVE 3D MAP DATA FUSION PLATFORM AND VIRTUAL WORLD SYSTEM THEREOF

(51) International classification	:H04L0029060000, G06F0003048100, A63F0013300000, G06F0030000000, G06Q0030060000
(31) Priority Document No	:62/955216
(32) Priority Date	:30/12/2019
(33) Name of priority country	:U.S.A.
(86) International Application No	:NA
Filing Date	:NA
(87) International Publication No	: NA
(61) Patent of Addition to Application Number	:NA
Filing Date	:NA
(62) Divisional to Application Number	:NA
Filing Date	:NA

(71)**Name of Applicant :**
1)TMRW Foundation IP SARL
Address of Applicant :14-16, Avenue Pasteur, 2310 Luxembourg. Luxembourg
(72)**Name of Inventor :**
1)CEVAT YERLI

(57) Abstract :
SYSTEM AND METHOD ENABLING A COLLABORATIVE 3D MAP DATA FUSION PLATFORM AND VIRTUAL WORLD SYSTEM THEREOF A method to generate a collaborative 3D map comprises providing a 3D map data fusion platform; providing a basic satellite map of a world location; publishing a detailed real-time virtual replica network (RVRN) of a real world place with reference to the basic satellite map; obtaining the pose (e.g., position and orientation) of a client device; and performing a simultaneous location and mapping (SLAM) process of a first coordinate space. The SLAM process uses image data from an imaging device of the client device, the pose of the client device, and/or the data of the basic satellite map to determine the pose of a plurality of features within the first coordinate space. The method further includes creating a new map comprising three-dimensional coordinates of the plurality of features within the first coordinate space and merging the new map with the published RVRN, creating a fused 3D map

No. of Pages : 57 No. of Claims : 20

(12) PATENT APPLICATION PUBLICATION
(19) INDIA
(22) Date of filing of Application :25/12/2020
(21) Application No.202014056483 A
(43) Publication Date : 02/07/2021

(54) Title of the invention : MULTI-DIMENSIONAL 3D ENGINE COMPUTING AND VIRTUALIZATION-BASED DYNAMIC LOAD BALANCING OF VIRTUAL OR REAL WORLDS

(51) International classification	:G06F0009500000, H04L0012803000, G06F0021600000, H04L0029080000, G06F0009455000
(31) Priority Document No	:62/955247
(32) Priority Date	:30/12/2019
(33) Name of priority country	:U.S.A.
(86) International Application No	:NA
Filing Date	:NA
(87) International Publication No	: NA
(61) Patent of Addition to Application Number	:NA
Filing Date	:NA
(62) Divisional to Application Number	:NA
Filing Date	:NA

(71)**Name of Applicant :**
1)TMRW Foundation IP SARL
Address of Applicant :14-16, Avenue Pasteur, 2310 Luxembourg. Luxembourg
(72)**Name of Inventor :**
1)Cevat Yerli
2)Prashanth Hirematada

(57) Abstract :
MULTI-DIMENSIONAL 3D ENGINE COMPUTING AND VIRTUALIZATION-BASED DYNAMIC LOAD BALANCING OF VIRTUAL OR REAL WORLDS A system enabling a distributed 3D engine for performing dynamic load balancing through virtual worlds are provided. The system comprises one or more server computers comprising memory and at least one processor, the memory storing a data structure representing at least one portion of a virtual or real world as a plurality of cells storing virtual objects. The memory further stores a distributed 3D engine comprising a resource manager implemented in a distributed deployment and a plurality of individual software engines. Resources are dynamically allocated via the distributed deployment to one or more cells based on a current load and a corresponding computed and ranked demand. In some embodiments, the demand further considers one or more of an amount of virtual objects and level of interactions within the portion of the persistent virtual world system visible to a user avatar. Methods thereof are also provided.

No. of Pages : 59 No. of Claims : 20

(12) PATENT APPLICATION PUBLICATION
(19) INDIA
(22) Date of filing of Application :25/12/2020
(21) Application No.202014056491 A
(43) Publication Date : 02/07/2021

(54) Title of the invention : ELECTRIC VEHICLE

(51) International classification	:B60W0010060000, B60W0010080000, B60W0010260000, F02B0063040000, H02K0007180000
(31) Priority Document No	:2019-239008
(32) Priority Date	:27/12/2019
(33) Name of priority country	:Japan
(86) International Application No	:NA
Filing Date	:NA
(87) International Publication No	: NA
(61) Patent of Addition to Application Number	:NA
Filing Date	:NA
(62) Divisional to Application Number	:NA
Filing Date	:NA

(71)**Name of Applicant :**
1)SUZUKI MOTOR CORPORATION
Address of Applicant :300 Takatsuka-cho, Minami-ku, Hamamatsu-shi, Shizuoka 432-8611, Japan Japan
(72)**Name of Inventor :**
1)Yasushi SOBUKAWA
2)Yuichi SATO
3)Kensuke SUZUKI
4)Shinya AGETSUMA
5)Kiyohide TAKANO

(57) Abstract :
[Abstract] [Problem to be Solved] To provide a system that can take full advantage of the applications of an engine generator apparatus. [Solution] A vehicle (10) includes a travel MG (20); a battery (30) for supplying electric power to the MG (20); an electric generator (42) for generating electric power for charging the battery (30); an engine (41) for driving the electric generator (42); and a GCU (45) for controlling an operational state of the engine (41), and the MG (20), the battery (30), the electric generator (42), the engine (41) and the GCU (45) constitute an electric generator unit (40) that is integrally attachable to and detachable from the vehicle (10), and the GCU (45) has, as an electricity generation mode, a manual electricity generation mode in which the engine (41) is started to operate in response to an operation of requesting electricity generation of the electric generator (42). [Selected Figure] Figure 2

No. of Pages : 51 No. of Claims : 10

(12) PATENT APPLICATION PUBLICATION
(21) Application No.202014056492 A
(19) INDIA
(22) Date of filing of Application :25/12/2020
(43) Publication Date : 02/07/2021

(54) Title of the invention : ELECTRICITY GENERATION CONTROL DEVICE

(51) International classification	:B60W0010060000, B60W0010080000, B60W0020130000, B60W0020000000, B60L0055000000
(31) Priority Document No	:2019-239009
(32) Priority Date	:27/12/2019
(33) Name of priority country	:Japan
(86) International Application No	:NA
Filing Date	:NA
(87) International Publication No	: NA
(61) Patent of Addition to Application Number	:NA
Filing Date	:NA
(62) Divisional to Application Number	:NA
Filing Date	:NA

(71)**Name of Applicant :**
1)SUZUKI MOTOR CORPORATION
Address of Applicant :300 Takatsuka-cho, Minami-ku, Hamamatsu-shi, Shizuoka 432-8611, Japan Japan
(72)**Name of Inventor :**
1)Yasushi SOBUKAWA
2)Kiyohide TAKANO

(57) Abstract :
[Abstract] [Problem to be Solved] To provide an electricity generation control device that can perform charging in a manner to reflect the intention of a user. [Solution] An electricity generation control device for a vehicle (10) including: a travel MG (20); a battery (30) for supplying electric power to the MG (20); an electric generator (42) for generating electric power for charging the battery (30); and an engine (41) for driving the electric generator (42) includes: a GCU (45) for controlling an operational state of the engine (41) in either electricity generation mode of an automatic electricity generation mode in which the operational state of the engine (41) is controlled according to an SOC of the battery (30) or a manual electricity generation mode in which the engine (41) is started to operate in response to an operation of requesting electricity generation of the electric generator (42); and a control panel (70) for allowing a user to set an electricity generation state in the manual electricity generation mode. [Selected Figure] Figure 4

No. of Pages : 49 No. of Claims : 4

(12) PATENT APPLICATION PUBLICATION
(21) Application No.202014056493 A
(19) INDIA
(22) Date of filing of Application :25/12/2020
(43) Publication Date : 02/07/2021

(54) Title of the invention : ELECTRICITY GENERATION CONTROL DEVICE

(51) International classification	:B60W0010060000, B60W0010080000, B60W0020000000, B60W0020130000, B60W0020120000
(31) Priority Document No	:2019-239010
(32) Priority Date	:27/12/2019
(33) Name of priority country	:Japan
(86) International Application No	:NA
Filing Date	:NA
(87) International Publication No	: NA
(61) Patent of Addition to Application Number	:NA
Filing Date	:NA
(62) Divisional to Application Number	:NA
Filing Date	:NA

(71)**Name of Applicant :**
1)SUZUKI MOTOR CORPORATION
Address of Applicant :300 Takatsuka-cho, Minami-ku, Hamamatsu-shi, Shizuoka 432-8611, Japan Japan
(72)**Name of Inventor :**
1)Yasushi SOBUKAWA
2)Kiyohide TAKANO

(57) Abstract :
[Abstract] [Problem to be Solved] To provide an electricity generation control device that can perform charging in a manner to reflect the intention of a user. [Solution] An electricity generation control device for a vehicle (10) including: a travel MG (20); a battery (30) for supplying electric power to the MG (20); an electric generator (42) for generating electric power for charging the battery (30); and an engine (41) for driving the electric generator (42) includes a GCU (45) for controlling an operational state of the engine (41) in either electricity generation mode of an automatic electricity generation mode in which the operational state of the engine (41) is controlled according to an SOC of the battery (30) or a manual electricity generation mode in which the engine (41) is started to operate in response to a user input requesting electricity generation of the electric generator (42), and when a target electric power is not output from the electric generator (42), the GCU (45) controls the operational state of the engine (41) such that an output electric power of the electric generator (42) reaches the target electric power by gradually changing the output electric power of the electric generator (42). [Selected Figure] Figure 5

No. of Pages : 50 No. of Claims : 5

(12) PATENT APPLICATION PUBLICATION
(19) INDIA
(22) Date of filing of Application :29/12/2020
(21) Application No.202014056971 A
(43) Publication Date : 02/07/2021

(54) Title of the invention : METHOD AND SYSTEM FOR MEASURING THE INSULATION RESISTANCE

(51) International classification	:G01R0031120000, G01R0031500000, G01R0031520000, G01R0027020000, B60L0053160000
(31) Priority Document No	:P.432357
(32) Priority Date	:31/12/2019
(33) Name of priority country	:Poland
(86) International Application No	:NA
Filing Date	:NA
(87) International Publication No	: NA
(61) Patent of Addition to Application Number	:NA
Filing Date	:NA
(62) Divisional to Application Number	:NA
Filing Date	:NA

(71)**Name of Applicant :**
1)Sonel S.A.
Address of Applicant :11 Wokulskiego, Swidnica 58-100, Poland Poland
(72)**Name of Inventor :**
1)Grzegorz Chrzanowski

(57) Abstract :
Abstract Method and system for measuring the insulation resistance The subject of the invention is a method and system for measuring the insulation resistance using DC voltage, with simultaneous control of the correctness of the test using an estimated measurement of partial discharges containing a voltage source (1) providing voltage from 2V to forty thousand volts, ammeter (2), voltmeter (3), control-display system (4), at least one power source for the equipment (5) and tested object isolation (6), with the signals from the voltmeter (3) and ammeter (2) supplied to the control-display system (4), which processes the signals, controls the source (1) and presents the measurement results. The system additionally includes a discharge counting system (9), a system for estimation of electric charge involved in the discharge (10), at least one low-pass filter (7) which supplies the signal to the current circuit (2) and at least one high-pass filter (8) which supplies signals to the discharge counting systems (9) and the estimation system of electric charge involved in the discharge (10) and a control-display system (4) where the processed measurement results are presented. Refer Fig. 3

No. of Pages : 12 No. of Claims : 7

(12) PATENT APPLICATION PUBLICATION
(19) INDIA
(22) Date of filing of Application :29/12/2020
(21) Application No.202014057031 A
(43) Publication Date : 02/07/2021

(54) Title of the invention : PREDICTIVE ROAD SPEED GOVERNOR

(51) International classification	:B60W0030140000, G05D0001020000, G08G0001096800, G01S0019420000, B60W0030095000
(31) Priority Document No	:16/729,872
(32) Priority Date	:30/12/2019
(33) Name of priority country	:U.S.A.
(86) International Application No	:NA
Filing Date	:NA
(87) International Publication No	: NA
(61) Patent of Addition to Application Number	:NA
Filing Date	:NA
(62) Divisional to Application Number	:NA
Filing Date	:NA

(71)**Name of Applicant :**
1)CUMMINS INC.
Address of Applicant :500 Jackson Street Columbus, Indiana, 47201 United States of America (US) U.S.A.
(72)**Name of Inventor :**
1)Joseph R. DYNES

(57) Abstract :
ABSTRACT PREDICTIVE ROAD SPEED GOVERNOR Engine control modules as well as methods and systems implementable in a vehicle are disclosed, in which the engine control module includes a processing unit operative to control a target vehicle speed. The processing unit receives current status information and lookahead information regarding a route to be taken by the vehicle, performs a lookahead power requirement calculation based on the current status information and the lookahead information to determine an event, calculates a plurality of offsets with respect to an isochronous speed of the vehicle based on the determined event, and sets a target vehicle speed curve by applying the plurality of offsets to the isochroous speed. Fig. 5

No. of Pages : 26 No. of Claims : 20

(12) PATENT APPLICATION PUBLICATION
(19) INDIA
(22) Date of filing of Application :31/12/2020

(21) Application No.202014057543 A
(43) Publication Date : 02/07/2021

(54) Title of the invention : NON-PUBLIC WIRELESS COMMUNICATION NETWORKS

(51) International classification	:H04W0048180000, H04W0004180000, H04W0012000000, H04W0008060000, H04W0008180000
(31) Priority Document No	:62/956,472
(32) Priority Date	:02/01/2020
(33) Name of priority country	:U.S.A.
(86) International Application No	:NA
Filing Date	:NA
(87) International Publication No	: NA
(61) Patent of Addition to Application Number	:NA
Filing Date	:NA
(62) Divisional to Application Number	:NA
Filing Date	:NA

(71)**Name of Applicant :**
1)APPLE INC.
Address of Applicant :One Apple Park Way, Cupertino, California 95014, United States of America U.S.A.
(72)**Name of Inventor :**
1)PRABHAKAR, Alosious Pradeep
2)VENKATARAMAN, Vijay
3)SADIQUE, Mohammed
4)KISS, Krisztian
5)NIMMALA, Srinivasan
6)ZHU, Yifan
7)KUMAR, Utkarsh

(57) Abstract :
A mobile device (UE) may access standalone non-public networks (SNPNs) in various different locations as equivalent SNPNs (eSNPNs) corresponding to a home 5 SNPN of the device. The device may obtain a list of eSNPNs corresponding to the home SNPN, and may access a second SNPN at a location different from a location of the home SNPN, in response to identifying the second SNPN and the list including the second SNPN as an eSNPN corresponding to the home SNPN of the device. The eSNPNs may include roaming eSNPNs (ReSNPNs) for accessing an enterprise NPN 10 globally and/or at various different locations. The eSNPN/ReSNPN list may be maintained in a new network identifier management function (NMF). NPNs may be implemented as network slice instances (NSIs) via identifying data in the single network slice selection assistance information (S-NSSAI). Multiple credentialed SNPNs of a UE may be prioritized for access by the UE. 15 To be Published with Figure 10

No. of Pages : 68 No. of Claims : 20

(12) PATENT APPLICATION PUBLICATION
(21) Application No.202017027157 A
(19) INDIA
(22) Date of filing of Application :26/06/2020
(43) Publication Date : 02/07/2021

(54) Title of the invention : METHOD, DEVICE AND SYSTEM FOR PROTECTING PARALLEL-CONNECTED TOPOLOGY UNITS •

(51) International classification :H02M 1/32
(31) Priority Document No :2019102376 68.0
(32) Priority Date :27/03/2019
(33) Name of priority country :China
(86) International Application No :PCT/CN2019/130494
Filing Date :31/12/2019
(87) International Publication No : NA
(61) Patent of Addition to Application Number :NA
Filing Date :NA
(62) Divisional to Application Number :NA
Filing Date :NA

(71)**Name of Applicant :**
1)SUNGROW POWER SUPPLY CO., LTD.
Address of Applicant :No. 1699 Xiyou Rd., New & High Technology Ind, strial Development Zone, Hefei, Anhui, P. R. China-230088 China
(72)**Name of Inventor :**
1)LIANG, Cheng
2)PAN, Nianan
3)WANG, Zhicheng
4)CHENG, Lin
5) SUN, Longlin
6)FENG, Jigui

(57) Abstract :
A method, a device, and a system for protecting parallel-connected topology units are provided. A target signal transmitted via the signal synchronization line is obtained, and the target signal is sent to other controllers based on a type of the target signal. If the target signal is a carrier synchronization signal, the current power module is controlled to perform carrier synchronization and to be in a working mode. If the target signal is a power module fault signal, the current power module is controlled to be in a shutdown mode. The signal synchronization lines between the parallel-connected topology units are shared in a time-sharing manner, where the carrier synchronization signal is transmitted if the power module works normally, and the power module fault signal is transmitted if the power module is faulty. The topology units monitor the transmitted target signal in real time for fast synchronous protection.

No. of Pages : 40 No. of Claims : 10

(12) PATENT APPLICATION PUBLICATION
(21) Application No.202017037763 A
(19) INDIA
(22) Date of filing of Application :02/09/2020
(43) Publication Date : 02/07/2021

(54) Title of the invention : SECONDARY BATTERY TOP CAP, SECONDARY BATTERY, AND METHOD FOR MANUFACTURING SECONDARY BATTERY

(51) International classification	:H01M 2/04, H01M 2/12, H01M 2/34, H01M 10/04, H01M 10/44
(31) Priority Document No	:10-2019-0004804
(32) Priority Date	:14/01/2019
(33) Name of priority country	:Republic of Korea
(86) International Application No	:PCT/KR2019/018517
Filing Date	:26/12/2019
(87) International Publication No	:WO 2020/149549
(61) Patent of Addition to Application Number	:NA
Filing Date	:NA
(62) Divisional to Application Number	:NA
Filing Date	:NA

(71)**Name of Applicant :**
1)LG CHEM, LTD.
Address of Applicant :128, Yeoui-daero Yeongdeungpo-gu Seoul 07336 Republic of Korea
(72)**Name of Inventor :**
1)KANG, Joon Sup
2)BAE, Joon Sung
3)SUNG, Nak Gi
4)KIM, Sung Tae

(57) Abstract :
Provided are a secondary battery top cap, a secondary battery, and a method for manufacturing the secondary battery. According to a first aspect of the present invention, provided is a secondary battery top cap comprising: a circumferential region for forming the outer circumferential surface of the top cap; a central region for forming the central portion of the top cap; a connection region for connecting the circumferential region and the central region; and a protrusion region protruding downward from the circumferential region, the central region, or the connection region.

No. of Pages : 15 No. of Claims : 10

(12) PATENT APPLICATION PUBLICATION
(19) INDIA
(22) Date of filing of Application :30/11/2020
(21) Application No.202017052048 A
(43) Publication Date : 02/07/2021

(54) Title of the invention : DEVICE AND METHOD FOR CONTROLLING TRANSMISSION POWER OF ELECTRONIC DEVICE IN WIRELESS COMMUNICATION SYSTEM

(51) International classification	:H04B0001000000, H04W0088060000, G06K0019077000, H04W0052240000, H04W0072120000
(31) Priority Document No	:10-2019-0000214
(32) Priority Date	:02/01/2019
(33) Name of priority country	:Republic of Korea
(86) International Application No	:PCT/KR2019/018790
Filing Date	:31/12/2019
(87) International Publication No	:WO 2020/141852
(61) Patent of Addition to Application Number	:NA
Filing Date	:NA
(62) Divisional to Application Number	:NA
Filing Date	:NA

(71)**Name of Applicant :**
1)SAMSUNG ELECTRONICS CO., LTD.
Address of Applicant :129, Samsung-ro, Yeongtong-gu Suwon-si, Gyeonggi-do 16677 Republic of Korea
(72)**Name of Inventor :**
1)LEE, Hyoungjoo
2)CHUNG, Wonsuk
3)LEE, Sangho
4)KIM, Hyejeong
5)JUNG, Euichang

(57) Abstract :
A device and a method for controlling the transmission power of an electronic device in a wireless communication system are disclosed. The electronic device can comprise: a housing; at least one radio frequency integrated circuit (RFIC) arranged in the housing, and configured so as to support a first radio access technology (RAT) and a second RAT; a first communication processor electrically or operatively connected to the at least one RFIC; a second communication processor electrically or operatively connected to the at least one RFIC and the first communication processor; and at least one memory, which is operatively connected to the first communication processor and the second communication processor or is a part of the first communication processor and/or the second communication processor, and stores a first threshold value related to the at least one RFIC.

No. of Pages : 66 No. of Claims : 15

(12) PATENT APPLICATION PUBLICATION
(19) INDIA
(22) Date of filing of Application :30/03/2021

(21) Application No.202114014401 A
(43) Publication Date : 02/07/2021

(54) Title of the invention : ROLLER CHAIN HAVING PITCH OF 12.7

(51) International classification	:F16G0013060000, F16H0055300000, B41F0013030000, B29C0055160000, B42B0004000000
(31) Priority Document No	:2019-235527
(32) Priority Date	:26/12/2019
(33) Name of priority country	:Japan
(86) International Application No	:NA
Filing Date	:NA
(87) International Publication No	: NA
(61) Patent of Addition to Application Number	:NA
Filing Date	:NA
(62) Divisional to Application Number	:NA
Filing Date	:NA

(71)**Name of Applicant :**
1)DAIDO KOGYO CO., LTD.
Address of Applicant :I-197, Kumasaka-machi, Kaga-shi, Ishikawa, 922-8686 Japan Japan
(72)**Name of Inventor :**
1)KAWABATA, Kazuya

(57) Abstract :
A roller chain having a pitch of 12.7 mm includes outer link plates each having a length La = 22 (-1.5 +0.5) [mm], a width dimension Ma = 9 (-1.5+0.5) [mm], a constriction dimension Na = 5 (-1 +1) [mm] and a thickness Ta = 1.2 (-0.1 +0.25) [mm] and inner link plates each having a length Lb = 23 (-1.5 +0.5) [mm], a width dimension Mb = 10.5 (-1.5+0.5) [mm], a constriction dimension Nb = 6.5 (-1.5 +0.5) [mm] and a thickness Tb = 1.2 (-0.1 +0.25) [mm]. (Figure 1)

No. of Pages : 14 No. of Claims : 2

(12) PATENT APPLICATION PUBLICATION
(19) INDIA
(22) Date of filing of Application :19/01/2021
(21) Application No.202117002450 A
(43) Publication Date : 02/07/2021

(54) Title of the invention : WORKPIECE SURFACE TREATING APPARATUS AND WORKPIECE SURFACE TREATING METHOD

(51) International classification	:B24C0005040000, B08B0003020000, B41F0023000000, B05C0011000000, B05B0003020000
(31) Priority Document No	:2019-021359
(32) Priority Date	:08/02/2019
(33) Name of priority country	:Japan
(86) International Application No	:PCT/JP2019/051251
Filing Date	:26/12/2019
(87) International Publication No	:WO 2020/162078
(61) Patent of Addition to Application Number	:NA
Filing Date	:NA
(62) Divisional to Application Number	:NA
Filing Date	:NA

(71)**Name of Applicant :**
1)MACOHO CO., LTD.
Address of Applicant :525, Aza-Kanawa, Isurugi-machi, Nagaoka-shi, Niigata 9402032 Japan
(72)**Name of Inventor :**
1)SAITO Fumiyasu
2)FURUSAWA Toshikazu
3)ABE Takeshi

(57) Abstract :
The purpose is to provide an epoch-making workpiece surface treatment apparatus that performs surface treatment on a workpiece while stably transporting the workpiece without obstructing the rotation of the workpiece or inclining or falling down the workpiece, and a workpiece surface treatment method using this workpiece surface treatment apparatus. A slit nozzle-type injection unit (wide gun) having a slit-shaped slurry injection port is adopted as a slurry injection unit 2 that injects slurry onto a workpiece W, the longitudinal direction of the slurry injection port of this slurry injection unit 2 is directed in a conveyance direction of the workpiece W, the workpiece W is disposed in a tilted state at a predetermined angle, and the slurry is injected onto the workpiece W in an inclined band shape.

No. of Pages : 23 No. of Claims : 14

(12) PATENT APPLICATION PUBLICATION
(21) Application No.201821022103 A
(19) INDIA
(22) Date of filing of Application :13/09/2018
(43) Publication Date : 02/07/2021

(54) Title of the invention : GRAVITY RETAINING WALL AND A METHOD OF CONSTRUCTION THEREFOR

(51) International classification	:E02D0029020000, E04B0001700000, E02B0011000000, E02B0007100000, E02D0005180000	(71)**Name of Applicant :** **1)Pradeep Tapkire** Address of Applicant :B No 58, Shivganga Nagar,Jule Solapur, Solapur-413004, Maharashtra, India. Maharashtra India
(31) Priority Document No	:NA	(72)**Name of Inventor :**
(32) Priority Date	:NA	**1)Jayant Govindrao Kulkarni**
(33) Name of priority country	:NA	**2)Bilawari Karkare**
(86) International Application No	:NA	**3)Pradeep Tapkire**
Filing Date	:NA	
(87) International Publication No	: NA	
(61) Patent of Addition to Application Number	:NA	
Filing Date	:NA	
(62) Divisional to Application Number	:NA	
Filing Date	:NA	

(57) Abstract :
GRAVITY RETAINING WALL AND A METHOD OF CONSTRUCTION THEREFOR Abstract Disclosed are a gravity retaining wall (100) and a method of construction therefor.The gravity retaining wall (100) comprisesa base (10), a shear key (20), a stem (30), a top surface (40), a free side surface (50), a plurality of weep holes (60) and a cavity (70).The cavity (70) is provided throughout the length of the gravity retaining wall (100).The plurality of weep holes (60) are connected to the cavity (70) andhelps to drain out water from a backfill to the cavity (70) that is further safely lead to a low lying areathereby reducing additional water load on the gravity retaining wall (100). Figure 1

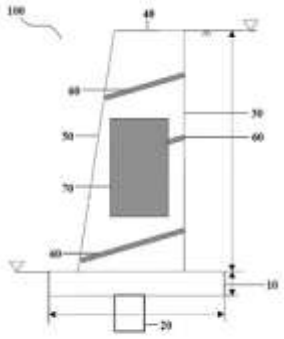

Figure 1

No. of Pages : 23 No. of Claims : 3

(12) PATENT APPLICATION PUBLICATION
(19) INDIA
(22) Date of filing of Application :23/08/2018

(21) Application No.201821031689 A
(43) Publication Date : 02/07/2021

(54) Title of the invention : A CLEANING DEVICE WITH SUSTAINED RELEASE OF CLEANING ACTIVES

(51) International classification	:C11D0017040000, A47K0011100000, C11D0001290000, C11D0003370000, B05B0007240000	(71)**Name of Applicant :** **1)ARROW GREENTECH LTD.** Address of Applicant :PLOT NO. 5310 SEVEN WATER TANK ROAD, NEAR V- TRANS, G.I.D.C. ANKLESHWAR GUJRAT INDIA 393 002 Maharashtra India
(31) Priority Document No	:NA	(72)**Name of Inventor :**
(32) Priority Date	:NA	**1)SHILPAN PRAVINCHANDRA PATEL**
(33) Name of priority country	:NA	
(86) International Application No	:NA	
Filing Date	:NA	
(87) International Publication No	: NA	
(61) Patent of Addition to Application Number	:NA	
Filing Date	:NA	
(62) Divisional to Application Number	:NA	
Filing Date	:NA	

(57) Abstract :
The present disclosure relates generally to cleaning devices, and, more particularly, to a sponge cleaning device with water soluble film for sustainable release of detergent.

Fig - 1

No. of Pages : 16 No. of Claims : 15

(12) PATENT APPLICATION PUBLICATION
(19) INDIA
(22) Date of filing of Application :01/01/2020

(21) Application No.201921044295 A
(43) Publication Date : 02/07/2021

(54) Title of the invention : SYNERGISTIC NUTRITIONAL COMPOSITIONS FOR ENHANCING ATP EFFICIENCY

(51) International classification	:A23L0033000000, C12Q0001660000, A61K0031341000, A23L0005000000, A61K0009510000	(71)**Name of Applicant :** **1)Celagenex Research (India) Pvt. Ltd.** Address of Applicant :801, Emerald-B, Dosti Planet North, Old Mumbai Pune Road, Shill, Thane -400612, Maharashtra, India Maharashtra India
(31) Priority Document No	:NA	(72)**Name of Inventor :**
(32) Priority Date	:NA	**1)PALKAR JOTIRAM**
(33) Name of priority country	:NA	**2)T. PRASAD RAJENDRA**
(86) International Application No	:NA	
Filing Date	:NA	
(87) International Publication No	: NA	
(61) Patent of Addition to Application Number	:NA	
Filing Date	:NA	
(62) Divisional to Application Number	:NA	
Filing Date	:NA	

(57) Abstract :
The invention disclosed herein relates to synergistic nutritional compositions for enhancing cellular ATP efficiency. Particularly, the invention relates to a synergistic, efficient, nutritional composition for promoting cellular ATP production comprising a therapeutically active exogenous combination of a stabilized oxaloacetate and a biotin-manganese complex along with pharmaceutically acceptable excipients; wherein the stabilized oxaloacetate and the biotin-manganese or salts thereof are present in a weight ratio ranging from1:0.01 to 1:0.2. Further, the present synergistic nutritional composition is useful for treating ATP deficiency disorders, age-related metabolic disorders, neurodegenerative diseases, cardiovascular diseases, bone related disorders, central nervous system diseases, cognitive disorders and like thereof.

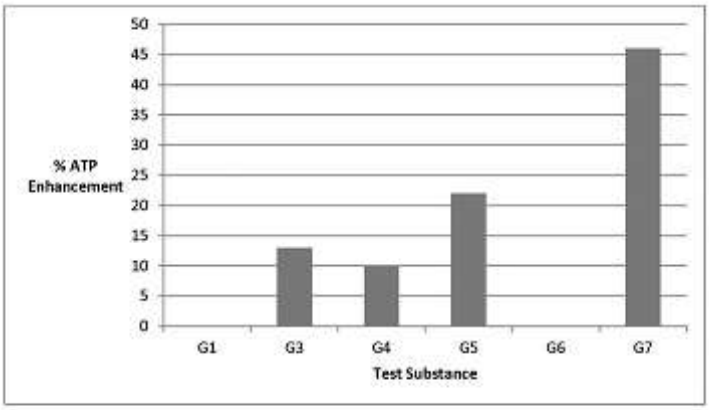

Fig. 4

No. of Pages : 50 No. of Claims : 18

(12) PATENT APPLICATION PUBLICATION
(19) INDIA
(22) Date of filing of Application :31/12/2019

(21) Application No.201921050148 A
(43) Publication Date : 02/07/2021

(54) Title of the invention : A COMPOSITE ROLLER ASSEMBLY FOR A CONVEYER SYSTEM

(51) International classification	:H04M0001020000, B29D0099000000, B32B0001080000, B32B0037140000, H01R0012700000	(71)**Name of Applicant :** **1)RELIANCE INDUSTRIES LIMITED** Address of Applicant :3rd Floor, Maker Chamber-IV, 222, Nariman Point, Mumbai-400 021, Maharashtra, India Maharashtra India
(31) Priority Document No	:NA	(72)**Name of Inventor :**
(32) Priority Date	:NA	**1)Dinesh Dnyaneshwar Welukar**
(33) Name of priority country	:NA	**2)Nilesh Rajaram Tawde**
(86) International Application No	:NA	**3)Roshni Arunrao Mhatre**
Filing Date	:NA	
(87) International Publication No	: NA	
(61) Patent of Addition to Application Number	:NA	
Filing Date	:NA	
(62) Divisional to Application Number	:NA	
Filing Date	:NA	

(57) Abstract :
TITLE: A COMPOSITE ROLLER ASSEMBLY FOR A CONVEYER SYSTEM • ABSTRACT The present disclosure relates to a composite roller (100) and method of assembly of such composite roller (100). The composite roller (100) may include a elongated member (1), supported by a housing (2) made from a rigid material. The housing (2) may include a plurality of grooves (3), that may be configured to receive an adhesive, for securing the elongated member (1) along the periphery of the housing (2). Also, the housing (2) may include a clearance region (4), defined between the plurality of grooves (3), to connect the plurality of the grooves (3) such that, at least two grooves form an inlet runner (5) and an outlet runner (6) for flow of the adhesive. This way, the elongated member (1) and the housing (2) may be bonded by the adhesive, with adequate dimensional tolerance limit for forming the composite roller (100). Figures 1 and 2a

No. of Pages : 22 No. of Claims : 16

(12) PATENT APPLICATION PUBLICATION
(21) Application No.201921050884 A
(19) INDIA
(22) Date of filing of Application :25/12/2019
(43) Publication Date : 02/07/2021

(54) Title of the invention : AN ARRANGEMENT OF MULTIPLE OPTICAL ELEMENTS TO GENERATE MULTIPLE BEAM PATTERNS

(51) International classification	:H01Q0025000000, G06F0013400000, H01Q0015140000, F21V0007000000, G01B0011140000	(71)**Name of Applicant :** **1)APPLETON GRP LLC** Address of Applicant :9377, Higgins Road, Rosemount, IL, 60018, U.S.A U.S.A.
(31) Priority Document No	:NA	(72)**Name of Inventor :**
(32) Priority Date	:NA	**1)PATIL Sumit Ramesh**
(33) Name of priority country	:NA	**2)GUPTA Sudha**
(86) International Application No	:NA	**3)CHATURVEDI Bharat**
Filing Date	:NA	
(87) International Publication No	: NA	
(61) Patent of Addition to Application Number	:NA	
Filing Date	:NA	
(62) Divisional to Application Number	:NA	
Filing Date	:NA	

(57) Abstract :
The present disclosure relates to field of an arrangement of multiple optical elements to generate multiple beam patterns. The arrangement (100) of multiple optical elements to plurality of fasteners (112), and an optics plate (106). The array board (102) having LEDs (104) mounted thereon in a plurality of first blade patterns (124a-124d). The optics plate (106) is removably fastened to the array board. The optics plate (106) defines lenses (108) in a plurality of second blade patterns (126a-126d) and reflectors (110) in a plurality of third blade patterns (128a-128d), identical to the first blade pattern (124a-124d). The optics plate (106) is manually rotated into a first configuration to align the second blade pattern (126a-126d) with the first blade pattern (124a-124d) and into a second configuration to align the third blade pattern (128a-128d) with the first blade pattern (124a-124d) to generate multiple beam patterns.

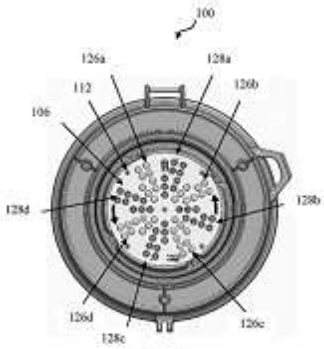

Figure 1a

No. of Pages : 17 No. of Claims : 10

(12) PATENT APPLICATION PUBLICATION
(19) INDIA
(22) Date of filing of Application :31/12/2019

(21) Application No.201921051007 A
(43) Publication Date : 02/07/2021

(54) Title of the invention : A LABYRINTH SEAL ASSEMBLY

(51) International classification	:F01D0011000000, F16J0015447000, H01L0021673000, F01C0019000000, B65B0011500000	(71)**Name of Applicant :** **1)RELIANCE INDUSTRIES LIMITED** Address of Applicant :3rd Floor, Maker Chamber-IV, 222, Nariman Point, Mumbai-400 021, Maharashtra, India. Maharashtra India
(31) Priority Document No	:NA	(72)**Name of Inventor :**
(32) Priority Date	:NA	**1)Dinesh Dnyaneshwar Welukar**
(33) Name of priority country	:NA	**2)Nilesh Rajaram Tawde**
(86) International Application No	:NA	**3)Roshni Arunrao Mhatre**
Filing Date	:NA	
(87) International Publication No	: NA	
(61) Patent of Addition to Application Number	:NA	
Filing Date	:NA	
(62) Divisional to Application Number	:NA	
Filing Date	:NA	

(57) Abstract :
The present disclosure discloses a labyrinth seal assembly (100) for a bearing including a housing. The housing includes a first enclosure portion (1) and a second enclosure portion (2), where the first and the second enclosure portions are engaged and relatively displaceable. A plurality of seal disks (3, 4) are disposed between the first enclosure portion and the second enclosure portion and each seal disk is defined with a kink portion (11). A first set of seal disks (3) is connectable to the first enclosure portion interposes with a second set of seal disks (4) connectable to the second enclosure portion. Further, at least one first end disk (5) is connectable to the first enclosure portion and is made of flexible material which is positioned at one end of the assembly. The first end disk forms a sealed chamber with the first enclosure portion of the housing. Fig. 1 is the representative figure.

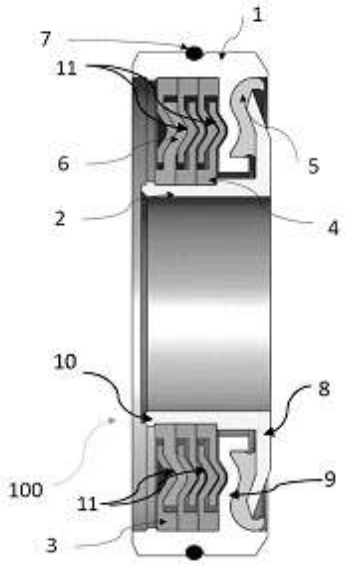

Figure 1

No. of Pages : 19 No. of Claims : 15

(12) PATENT APPLICATION PUBLICATION
(21) Application No.201921051119 A
(19) INDIA
(22) Date of filing of Application :25/12/2019
(43) Publication Date : 02/07/2021

(54) Title of the invention : SYSTEM AND METHOD FOR GENERATING JOB RELATED DATA

(51) International classification	:H01M0010440000, G11B0017049000, G03G0015080000, A24D0003060000, B65D0006220000	(71)**Name of Applicant :** **1)EdSanta Education Pvt Ltd** Address of Applicant :Plot 112, Flat 601, Floor 6, Panju Mahal, CHSL B. J. Road, Nr Galaxy Apts Bandra, (W), Mumbai 400050 Maharashtra India Maharashtra India
(31) Priority Document No	:NA	**2)Rohan Krishna**
(32) Priority Date	:NA	(72)**Name of Inventor :**
(33) Name of priority country	:NA	**1)Rohan Krishna**
(86) International Application No	:NA	**2)Shashwat Swaroop**
Filing Date	:NA	**3)Kshama Shah Bhatia**
(87) International Publication No	: NA	**4)Ammin Umer Rajqotwala**
(61) Patent of Addition to Application Number	:NA	
Filing Date	:NA	
(62) Divisional to Application Number	:NA	
Filing Date	:NA	

(57) Abstract :
ABSTRACT SYSTEM AND METHOD FOR GENERATING JOB RELATED DATA A system and method for generating job related data is provided. The system comprises a host system and at least one user in communication with the host system. The system is configured to receive input parameters from a user, the input parameters include current job-related parameters of the user including job title, location and years of experience; processes the received input parameters whereby the input parameters are mapped with pre-stored data on the host system to determine the relevant job-titles from the pre-stored data; determine a first set of parameters and a second set of parameters associated with the relevant job-titles; and generate a report on the host system and/or the user device, the report comprising of one or more proposed job-titles with the first set of parameters and the second set of parameters. Reference Figure 1

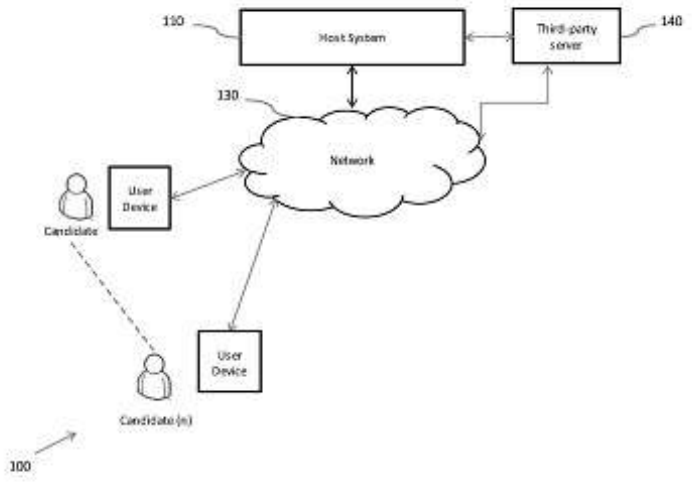

FIGURE 1

No. of Pages : 14 No. of Claims : 8

(12) PATENT APPLICATION PUBLICATION
(19) INDIA
(22) Date of filing of Application :25/12/2019

(21) Application No.201921053838 A
(43) Publication Date : 02/07/2021

(54) Title of the invention : BUMPER LENS UNIT OF A VEHICLE

(51) International classification	:G02B0027220000, G02B0003000000, G01N0021450000, G02B0001111000, B60R0019480000	(71)**Name of Applicant :** **1)VOLVO TRUCK CORPORATION** Address of Applicant :G–TEBORG, SWEDEN SE-405 08 Sweden
(31) Priority Document No	:NA	(72)**Name of Inventor :** **1)UBHAYAKAR Chinmay**
(32) Priority Date	:NA	**2)SIMON Mini**
(33) Name of priority country	:NA	
(86) International Application No	:NA	
Filing Date	:NA	
(87) International Publication No	: NA	
(61) Patent of Addition to Application Number	:NA	
Filing Date	:NA	
(62) Divisional to Application Number	:NA	
Filing Date	:NA	

(57) Abstract :
Bumper lens unit (20) of a vehicle, the bumper lens unit (20) comprising a frame panel (21); a lens (22), the lens (22) comprising a composite material (220) which is transparent, the composite material (220) comprising a resin (221) and fibers (222), in which the refractive index of the resin (221) matches with a refractive index of the fibers (222), in which nano-particles interphases (223) are arranged around the fibers (222), a refractive index of the nano-particles interphases (223) is between the refractive index of the resin (221) and the refractive index of the fibers (222); a structural adhesive (24), the frame panel (21) and the lens (22) are bonded to other by the structural adhesive (24) whereby a front wall (20b) of the bumper lens unit (20) is flush in the vicinity of a junction (23) between the frame panel (21) and the lens (22).

Fig. 2

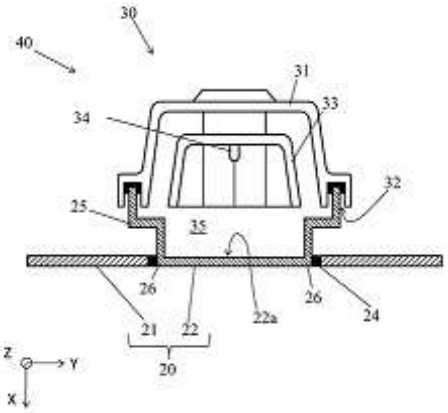

No. of Pages : 27 No. of Claims : 14

(12) PATENT APPLICATION PUBLICATION
(21) Application No.201921053840 A
(19) INDIA
(22) Date of filing of Application :25/12/2019
(43) Publication Date : 02/07/2021

(54) Title of the invention : TANDEM MASTER CYLINDER FOR A MOTOR VEHICLE

(51) International classification	:B60T0011200000, B60T0011236000, B60T0011232000, B60T0013565000, F15B0007080000	(71)**Name of Applicant :** **1)Endurance Technologies Limited** Address of Applicant :Endurance Technologies Ltd., E-92, MIDC Industrial Area, Waluj, Aurangabad Maharashtra- 431 136, INDIA Maharashtra India
(31) Priority Document No	:NA	(72)**Name of Inventor :** **1)Sourabh Kumar Jain**
(32) Priority Date	:NA	
(33) Name of priority country	:NA	
(86) International Application No	:NA	
Filing Date	:NA	
(87) International Publication No	: NA	
(61) Patent of Addition to Application Number	:NA	
Filing Date	:NA	
(62) Divisional to Application Number	:NA	
Filing Date	:NA	

(57) Abstract :
Tandem Master Cylinder for a Motor Vehicle • The invention is a tandem master cylinder (1000) for a motor vehicle comprising of a master cylinder body (100) with a cylindrical bore (200), a primary piston (500) and a secondary piston (600) situated within the cylindrical bore (200). The master cylinder body (100) has an outlet passage (140) from the cylindrical bore (200) opening into a cavity (150) in a housing portion (160) of the master cylinder body (100). The housing portion (160) further has a passage (168) from the cavity (150) to an outlet port (170). The cavity (150) accommodates a brake pressure regulatory mechanism (800). The master cylinder body (100) and the housing portion (160) are housed as a single unit in the motor vehicle. The tandem master cylinder (1000) allows the brake pressure regulatory mechanism (800) to be economically provided without necessitating any changes in the structure of the motor vehicle. (Refer to Figure 2 for the invention)

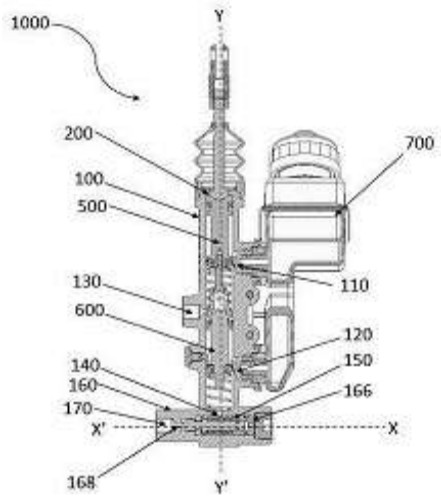

Figure 2

No. of Pages : 14 No. of Claims : 8

(12) PATENT APPLICATION PUBLICATION
(19) INDIA
(22) Date of filing of Application :25/12/2019

(21) Application No.201921053841 A
(43) Publication Date : 02/07/2021

(54) Title of the invention : A SHOCK ABSORBER FOR MOTOR VEHICLE

(51) International classification	:F16F0009060000, F16F0009360000, F16F0009430000, B60G0015060000, B60G0013000000	(71)**Name of Applicant :** **1)Endurance Technologies Limited** Address of Applicant :Endurance Technologies Ltd E 93, MIDC Industrial Area, Waluj, Aurangabad, Maharashtra-431136 Maharashtra India
(31) Priority Document No	:NA	(72)**Name of Inventor :**
(32) Priority Date	:NA	**1)Vijaykumar Eknath Paithankar**
(33) Name of priority country	:NA	**2)Santosh Dilip Ghate**
(86) International Application No	:NA	
Filing Date	:NA	
(87) International Publication No	: NA	
(61) Patent of Addition to Application Number	:NA	
Filing Date	:NA	
(62) Divisional to Application Number	:NA	
Filing Date	:NA	

(57) Abstract :
A Shock absorber for Motor Vehicle The invention is about a shock absorber (1000) for a motor vehicle which is mono-tube (138) and comprises of one gas chamber (106) and an oil chamber (112). The floating piston (108) so provided in the shock absorber (1000) acts as a separating member for the oil chamber (112) and gas chamber (106). Said floating piston (108) is made in such a way that it has radially outward projection (134A or 134B) and the outer diameter of said radially outward projections (134A or 134B) are lesser than the outer diameter of the piston (108). The projections can be a continuous band (134B) or minimum two in number (134A) and with uniform spacing in between. This allows the ease of oil filling in the oil chamber (112) and also eliminates the need for a separate position checking screw (102) and gas filling screw (100) (as was prevalent in the prior art), and thus reducing the chances of leakage. (Refer to Figure 3b)

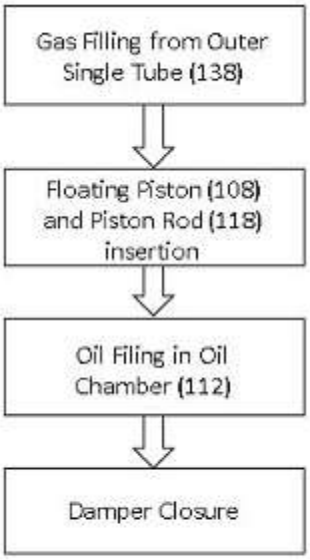

Figure 3b

No. of Pages : 14 No. of Claims : 6

(12) PATENT APPLICATION PUBLICATION
(19) INDIA
(22) Date of filing of Application :25/12/2019

(21) Application No.201921053843 A
(43) Publication Date : 02/07/2021

(54) Title of the invention : A SAFETY DEVICE FOR NAIL GUN

(51) International classification	:B25C0001000000, B25C0001060000, B25C0001040000, B25C0007000000, E04B0002780000	(71)**Name of Applicant :** **1)Larsen & Toubro Limited** Address of Applicant :L&T House, Ballard Estate, P.O Box No. 278, Mumbai- 400001, Maharashtra, India. Maharashtra India
(31) Priority Document No	:NA	(72)**Name of Inventor :**
(32) Priority Date	:NA	**1)PANDEY, Himanshu**
(33) Name of priority country	:NA	**2)RAJHANS, Rupesh S.**
(86) International Application No	:NA	**3)SASANE, Sagar Shrikant**
Filing Date	:NA	**4)ADHAV, Dilip**
(87) International Publication No	: NA	
(61) Patent of Addition to Application Number	:NA	
Filing Date	:NA	
(62) Divisional to Application Number	:NA	
Filing Date	:NA	

(57) Abstract :
The present invention discloses a safety device for a nail gun. The device comprisesa first bracket 104 removably coupled with a nail gun 102, a second bracket 106 at one end is movably coupled with the first bracket 104.A stud 110 operatively coupled at other end of the second bracket 106 such that the other end of the second bracket 106 and the stud 110 moves between a first position and a second position. The first position corresponds to a position where the stud 110 restricts movement of the trigger, thereby restricting actuation of the nail gun 102, and the second position corresponds to a position where the stud 110 allows movement of the trigger, thereby allowing actuation of the nail gun 102.The device incorporates spring 114 between the nail gun 102 and the second bracket 106 to automatically bring the stud 110 to the first position.

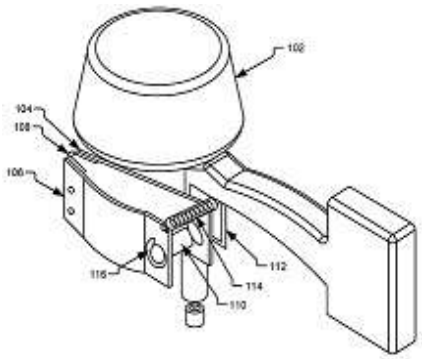

FIG. 1C

No. of Pages : 18 No. of Claims : 10

(12) PATENT APPLICATION PUBLICATION
(19) INDIA
(22) Date of filing of Application :26/12/2019

(21) Application No.201921053851 A
(43) Publication Date : 02/07/2021

(54) Title of the invention : AN HYDRAULIC INTEGRATED DUAL COMBI BRAKE FOR TWO WHEELERS

(51) International classification	:B62L0003080000, B62L0003020000, H01L0023525000, B60T0008260000, B60T0011040000	
(31) Priority Document No	:NA	
(32) Priority Date	:NA	
(33) Name of priority country	:NA	
(86) International Application No	:NA	
Filing Date	:NA	
(87) International Publication No	: NA	
(61) Patent of Addition to Application Number	:NA	
Filing Date	:NA	
(62) Divisional to Application Number	:NA	
Filing Date	:NA	

(71)**Name of Applicant :**
1)ADVIK HI-TECH PVT LTD
Address of Applicant :PLOT NO. B-5, CHAKAN INDUSTRIAL AREA, PHASE II, VILLAGE : VASULI, TALUKA : KHED, DIST.: PUNE, MAHARASHTRA, INDIA - 410 501. Maharashtra India
(72)**Name of Inventor :**
1)GAWADE SHYAM BALRAM
2)KAKADE KAMALKISHOR BABURAO
3)VISHAL MINANATH THORAT
4)NITISH SUDHAKARRAO KANDHARKAR

(57) Abstract :
An hydraulic integrated dual combi brake for two wheelers (1) according to the present invention comprises a brake pedal (2 a rear brake lever and a front brake lever (la, lb) being connected with front brake cable and rear brake cable (2a, 2b) the master body (4) being integrated with fifth link (L5) further first elastic member (S1) being mounted between master body (4) and first link (L1) said first link (L1) being integrated with second link (L2) further third link (L3) one end being integrated with second link (L2) and an another end being integrated sixth link (L6) one end of the fourth link (L4) being integrated with seventh link (L7) and an another end being integrated with fifth link (L5) second elastic member (S2) said second elastic member being axially connected with fifth link (L5) and second master body (5) said system provides an economical and efficient solution for enhancing braking system.

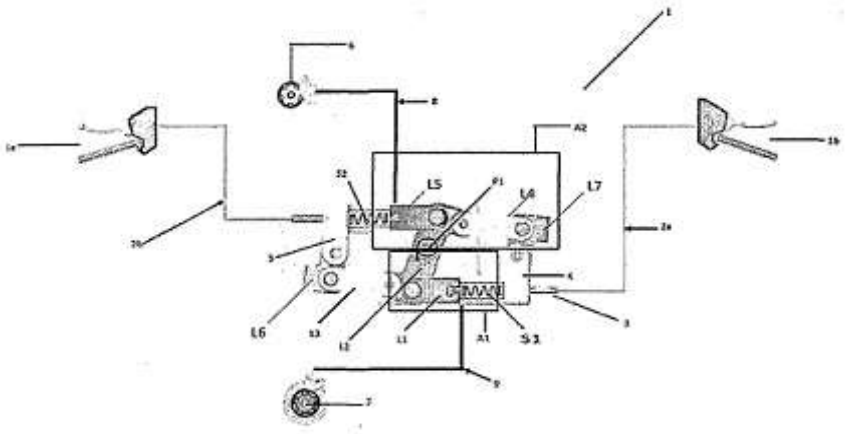

Fig. 1

No. of Pages : 16 No. of Claims : 3

(12) PATENT APPLICATION PUBLICATION
(21) Application No.201921053916 A
(19) INDIA
(22) Date of filing of Application :26/12/2019
(43) Publication Date : 02/07/2021

(54) Title of the invention : DESIGN AND WORKING OF TORQUE VARIABLE AND SPEED VARIABLE HYDROMECHANICAL PEDAL TRANSMISSION BICYCLE.

(51) International classification	:B62M0011140000, F16H0047040000, B62M0025080000, E02F0009220000, B60H0001320000	(71)**Name of Applicant :** **1)PATEL SANKETBHAI RAJESHBAI** Address of Applicant :9, SHIVNAGAR SOCIETY, BHAUPURA, NR. MUNICIPALITY GARDEN, BHAUPURA CHOWK KADI, MEHSANA, GUJARAT, INDIA-382 715. Gujarat India **2)PATEL NIRAVKUMAR ARVINDBHAI**
(31) Priority Document No	:NA	
(32) Priority Date	:NA	
(33) Name of priority country	:NA	
(86) International Application No	:NA	(72)**Name of Inventor :** **1)PATEL SANKETBHAI RAJESHBAI** **2)PATEL NIRAVKUMAR ARVINDBHAI**
Filing Date	:NA	
(87) International Publication No	: NA	
(61) Patent of Addition to Application Number	:NA	
Filing Date	:NA	
(62) Divisional to Application Number	:NA	
Filing Date	:NA	

(57) Abstract :
This invention describes a drive system for a pedal driven bicycle to improve its speed and torque efficiently using an assembly which utilizes the oscillating motion of the pedaling to generate pressurized power to provide the speed to accelerate the motion of pedaling without force. Here the drive has a sprocket and pivoting axle mounted on bicycle frame. The system is designed with hydraulic assembly consisting of hydraulic cylinder and plunger which is connected parallel by screw to join the link. With this arrangement the torque and speed of the drive can be changes as per the user™s requirement. The ergonomics is changes to increase the use comfort and the hydraulic assembly shocks absorbers helps to restrict the shocks to be transferred to the user™s body. TITLE Design and working of torque variable and speed variable hydromechanical pedal transmission bicycle.

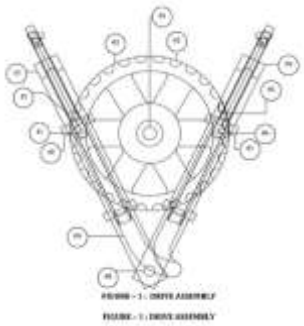

No. of Pages : 20 No. of Claims : 6

(12) PATENT APPLICATION PUBLICATION
(19) INDIA
(22) Date of filing of Application :26/12/2019

(21) Application No.201921053917 A
(43) Publication Date : 02/07/2021

(54) Title of the invention : SNORKEL WITH PATH DEFLECTOR

(51) International classification	:B63C0011200000, F02M0035160000, F02M0035100000, F02M0035024000, F02M0035080000	(71)**Name of Applicant :** **1)Fleetguard Filters Private Limited** Address of Applicant :136, Park Marina Road, Baner Pune. Maharashtra India (72)**Name of Inventor :** **1)Gaikwad Yogesh Kaluram**
(31) Priority Document No	:NA	
(32) Priority Date	:NA	
(33) Name of priority country	:NA	
(86) International Application No	:NA	
Filing Date	:NA	
(87) International Publication No	: NA	
(61) Patent of Addition to Application Number	:NA	
Filing Date	:NA	
(62) Divisional to Application Number	:NA	
Filing Date	:NA	

(57) Abstract :
A snorkel 100 design with inbuilt functionality of water separation, through a path deflector guide 110, from unfiltered air is provided. The path deflector guide 100 is operable to separate water droplets from unfiltered air entering the enclosed structure 102 of the snorkel 100 and thereby resulting in water separated air flowing through the air filter connected to the engine of the automobile. The path deflector guide 110, as disclosed herein, comprises of contiguously connected upper 112 and lower members 114, placed co-axially to the air flow path, and deflected, on both sides, at predetermined angles to produce a curvilinear shape.

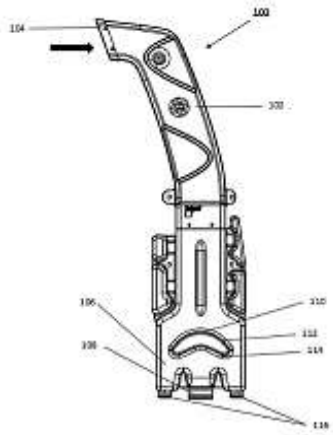

FIG. 1

No. of Pages : 24 No. of Claims : 9

(12) PATENT APPLICATION PUBLICATION
(19) INDIA
(22) Date of filing of Application :26/12/2019

(21) Application No.201921053942 A
(43) Publication Date : 02/07/2021

(54) Title of the invention : METHOD AND SYSTEM FOR SECURITY MANAGEMENT IN BLOCKCHAIN NETWORK

(51) International classification	:H04L0029060000, G06F0021620000, H04L0009320000, G06F0008650000, H04W0012060000	(71)**Name of Applicant :** **1)Tata Consultancy Services Limited** Address of Applicant :Nirmal Building, 9th Floor, Nariman Point Mumbai Maharashtra India 400021 Maharashtra India (72)**Name of Inventor :** **1)MARDIKAR, Nandkishor Janardan** **2)ROUTRAY, Biswamohan** **3)NAIR, Susmitha**
(31) Priority Document No	:NA	
(32) Priority Date	:NA	
(33) Name of priority country	:NA	
(86) International Application No	:NA	
Filing Date	:NA	
(87) International Publication No	: NA	
(61) Patent of Addition to Application Number	:NA	
Filing Date	:NA	
(62) Divisional to Application Number	:NA	
Filing Date	:NA	

(57) Abstract :
Security management of blockchain are platform. Hardly any security management solutions are provided as a single platform for an end user to access and modify the security requirement. Embodiments herein provide a method and system for security management of a plurality of nodes in a blockchain network. The method disclosed enables an authorized user to seamlessly and dynamically manage a plurality of security actions using a single platform by monitoring and controlling one or more security aspects of the blockchain network. The plurality security actions include performing a security analysis, applying a security policy setting, performing a multi-key security upgrade, and performing an identity and access control management. Each of the security actions can be applied to all or one or more nodes of interest providing node specific or customized security management for individual requirements of a participant/owner of the specific node. . [To be published with FIG.2]

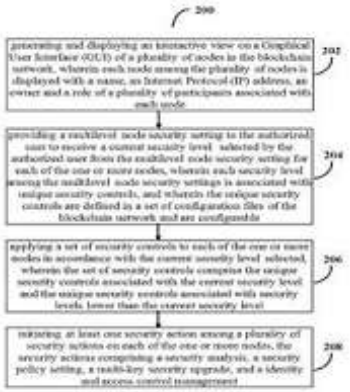

FIG. 2

No. of Pages : 40 No. of Claims : 16

(12) PATENT APPLICATION PUBLICATION
(19) INDIA
(22) Date of filing of Application :26/12/2019

(21) Application No.201921053959 A
(43) Publication Date : 02/07/2021

(54) Title of the invention : A SYSTEM AND METHOD FOR PROVIDING AN ADVISOR TO AN INDIVIDUAL

(51) International classification	:G06Q0030020000, H04W0084000000, H04N0021414000, A61B0005044000, G06F0003048800
(31) Priority Document No	:NA
(32) Priority Date	:NA
(33) Name of priority country	:NA
(86) International Application No	:NA
Filing Date	:NA
(87) International Publication No	: NA
(61) Patent of Addition to Application Number	:NA
Filing Date	:NA
(62) Divisional to Application Number	:NA
Filing Date	:NA

(71)**Name of Applicant :**
1)ADITYA VIKRAM KANORIA
Address of Applicant :FLAT NO. 301, SHIVAM BUILDING, MISTRY COMPLEX, J B NAGAR, ANDHERI EAST, MUMBAI- 400059, MAHARASHTRA, INDIA Maharashtra India
(72)**Name of Inventor :**
1)ADITYA VIKRAM KANORIA

(57) Abstract :
A system for providing an advisor to an individual is provided. The system includes a registration module configured to register one or more advisors upon receiving one or more corresponding advisor details and generate one or more advisor profiles of one or more corresponding advisors based on the one or more corresponding advisor details. An analysis module configured to receive an input from a user representing at least one of one or more parameters and a criterion from criteria, wherein the criteria represent one or more requirements required in an advisor; and identify at least one advisor profile by mapping the criterion with the one or more advisor profiles using mapping techniques. A recommendation module to recommend at least one identified advisor profile to the user based on analysed data over a communication network. FIG. 2

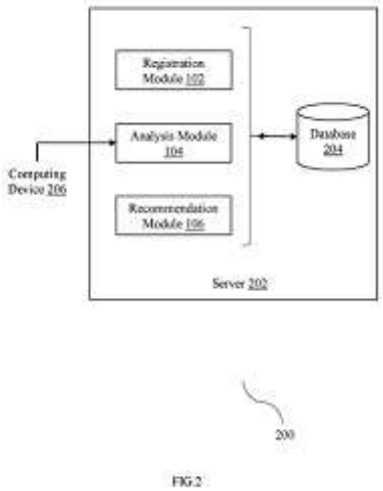

FIG.2

No. of Pages : 20 No. of Claims : 8

(12) PATENT APPLICATION PUBLICATION
(19) INDIA
(22) Date of filing of Application :26/12/2019

(21) Application No.201921053997 A
(43) Publication Date : 02/07/2021

(54) Title of the invention : SUPER ABSORBENT POLYMER AND A PESTICIDE

(51) International classification	:H01M0010440000, G11B0017049000, G03G0015080000, A24D0003060000, B65D0006220000	(71)**Name of Applicant :** **1)UPL LIMITED** Address of Applicant :UPL House, 610 B/2, Bandra Village, off Western Express Highway, Bandra (East), Mumbai 400 051, Maharashtra, India Maharashtra India
(31) Priority Document No	:NA	(72)**Name of Inventor :**
(32) Priority Date	:NA	**1)WAGH, Pradip Dattatray**
(33) Name of priority country	:NA	**2)SHIRSAT, Rajan Ramakant**
(86) International Application No	:NA	**3)SARKAR, Prasun**
Filing Date	:NA	
(87) International Publication No	: NA	
(61) Patent of Addition to Application Number	:NA	
Filing Date	:NA	
(62) Divisional to Application Number	:NA	
Filing Date	:NA	

(57) Abstract :
The present invention relates to a stable composition comprising super absorbent polymer and a bioactive agent. The present invention also relates to a method of coating seeds with said compositions and method of controlling weeds with said compositions.

Figure 1

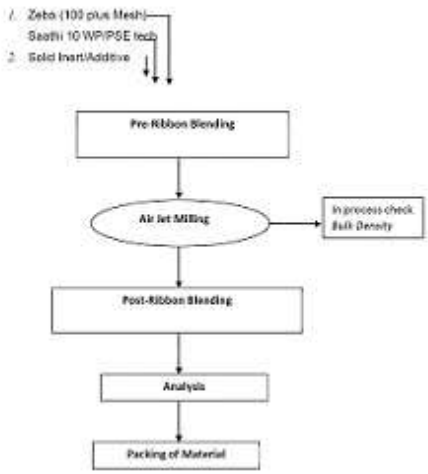

No. of Pages : 31 No. of Claims : 15

(12) PATENT APPLICATION PUBLICATION
(19) INDIA
(22) Date of filing of Application :27/12/2019

(21) Application No.201921054098 A
(43) Publication Date : 02/07/2021

(54) Title of the invention : MKEYPAD

(51) International classification	:G06F0003020000, G06F0003023000, G06F0003048800, H04M0001230000, G09B0013000000	(71)**Name of Applicant :** **1)KUDAI SURESH THACHOLI** Address of Applicant :8-A/31, KRISHNA NAGAR, KHAIRAPADA, BOISAR, PALGHAR, MAHARASHTRA, INDIA - 401 501. Maharashtra India
(31) Priority Document No	:NA	(72)**Name of Inventor :** **1)KUDAI SURESH THACHOLI**
(32) Priority Date	:NA	
(33) Name of priority country	:NA	
(86) International Application No	:NA	
Filing Date	:NA	
(87) International Publication No	: NA	
(61) Patent of Addition to Application Number	:NA	
Filing Date	:NA	
(62) Divisional to Application Number	:NA	
Filing Date	:NA	

(57) Abstract :
MKEYPAD is a table top modified QWERTY computer keyboard, has 16 keys, programmed to be equivalent to a normal 84 keys QWERTY keyboard. 8 numbers of input keys are arranged horizontally and each key can be modified to 10 keys. Left side 4 input keys are pressed by 4 left hand fingers and right side 4 input keys are pressed by 4 right hand fingers. Each finger has to press only 1 input key. Outputs generated by 8 input keys are modified by 6 modification keys such as AlphShift, RowShift, ShiftLock, NumLock. Function and Command, operated by two thump fingers. Each thump finger has to press 3 modification keys which are arranged in a radial format. Ctrl and Alt key is also there for short cut key operation. MKEYPAD is a simple, cost effective and fast typing computer keyboard.

Figure-1

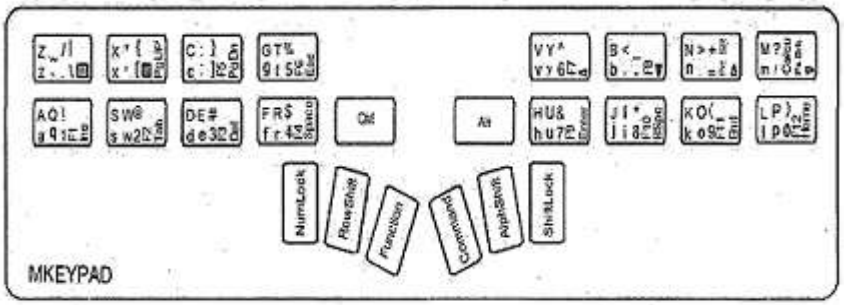

No. of Pages : 8 No. of Claims : 6

(12) PATENT APPLICATION PUBLICATION
(21) Application No.201921054111 A
(19) INDIA
(22) Date of filing of Application :27/12/2019
(43) Publication Date : 02/07/2021

(54) Title of the invention : A WOUND HEALING COMPOSITION

(51) International classification	:A61K0036480000, A61K0045060000, A61L0015440000, A61K0008220000, A61L0026000000	(71)**Name of Applicant :** **1)Pradeep Murgesh Kanojiya** Address of Applicant :Opp. ONGC, Angel Gate, Ambikawadi, H. No. 184, Nagaon, Uran 400702, Maharashtra, India Maharashtra India
(31) Priority Document No	:NA	(72)**Name of Inventor :**
(32) Priority Date	:NA	**1)Pradeep Murgesh Kanojiya**
(33) Name of priority country	:NA	
(86) International Application No	:NA	
Filing Date	:NA	
(87) International Publication No	: NA	
(61) Patent of Addition to Application Number	:NA	
Filing Date	:NA	
(62) Divisional to Application Number	:NA	
Filing Date	:NA	

(57) Abstract :
A wound healing composition is provided. The wound healing composition includes garlic, datura, nutmeg, camphor, mustard oil and red chilli, wherein the wound healing composition includes 60 to 90 % w/w garlic; 250 to 400 % w/w datura; 20 to 70 % w/w nutmeg; 40 to 80 % w/w fenugreek; 5 to 20 % w/w camphor; 900 to 1100 % w/w mustard oil; and 2 to 6 % w/w red chilli. The wound healing composition provides various advantages, including but not limited to, healing of wounds, scratches, and skin tear. The application of the wound healing composition results in speedy recovery from skin injuries while preventing any infection.

No. of Pages : 13 No. of Claims : 2

(12) PATENT APPLICATION PUBLICATION
(19) INDIA
(22) Date of filing of Application :27/12/2019

(21) Application No.201921054135 A
(43) Publication Date : 02/07/2021

(54) Title of the invention : PROCESS OF PURIFYING FC-CONTAINING FUSION PROTEIN •

(51) International classification	:C07K0016000000, C12N0015850000, C07K0016400000, C12N0015620000, C12N0015700000
(31) Priority Document No	:NA
(32) Priority Date	:NA
(33) Name of priority country	:NA
(86) International Application No	:NA
Filing Date	:NA
(87) International Publication No	: NA
(61) Patent of Addition to Application Number	:NA
Filing Date	:NA
(62) Divisional to Application Number	:NA
Filing Date	:NA

(71)**Name of Applicant :**
1)CADILA HEALTHCARE LIMITED
Address of Applicant :Zydus Corporate Park, Scheme No. 63, Survey No. 536, Khoraj (Gandhinagar), Nr. Vaishnodevi Circle, Sarkhej Gandhinagar Highway, Ahmedabad 382481, Gujarat, India Gujarat India
(72)**Name of Inventor :**
1)MENDIRATTA, Sanjeev Kumar
2)BANDYOPADHYAY, Sanjay
3)SINGH, Avanish Kumar

(57) Abstract :
ABSTRACT Process of purifying Fc-containing fusion protein • The present invention provides a process of purification of vascular endothelial growth factor (VEGF)-specific fusion protein, preferably aflibercept, which comprises mixed mode chromatography. In one aspect, the process of purification of Fc-containing fusion protein, preferably aflibercept wherein purification process comprises following chromatography steps sequentially: 1. Affinity chromatography followed by; 2. Ion exchange chromatography followed by; 3. Mixed mode chromatography. In further aspect, the present invention provides a process of purification of Fc-containing fusion protein, preferably aflibercept, which comprises two chromatography steps wherein affinity chromatography is performed at first step followed by either ion exchange chromatography, preferably anion exchange chromatography or multi-mode chromatography.

No. of Pages : 45 No. of Claims : 25

(12) PATENT APPLICATION PUBLICATION
(19) INDIA
(22) Date of filing of Application :27/12/2019

(21) Application No.201921054171 A
(43) Publication Date : 02/07/2021

(54) Title of the invention : AN INTERNET OF THINGS BASED MEDICINE MANAGEMENT SYSTEM AND A METHOD TO OPERATE THE SAME

(51) International classification	:A61J0007000000, G07F0017000000, B65B0009060000, A61M0011060000, G01N0021956000	(71)**Name of Applicant :** **1)AMIT SINHA** Address of Applicant :54, PANORAMA TOWERS 4TH CROSS LANE, ANDHERI(WEST), MUMBAI 400053, MAHARASHTRA, INDIA Maharashtra India
(31) Priority Document No	:NA	(72)**Name of Inventor :**
(32) Priority Date	:NA	**1)AMIT SINHA**
(33) Name of priority country	:NA	
(86) International Application No	:NA	
Filing Date	:NA	
(87) International Publication No	: NA	
(61) Patent of Addition to Application Number	:NA	
Filing Date	:NA	
(62) Divisional to Application Number	:NA	
Filing Date	:NA	

(57) Abstract :
An internet of things-based medicine management system is disclosed. The system includes a medicine dispenser to store a plurality of medicines, a medicine scanning subsystem to enable scanning of at least one medicine pack from a plurality of stored medicines for aggregating information associated with the at least one medicine pack; a medicinal information processing subsystem to receive scanned information associated with the at least one medicine pack, to process received medicinal information associated with the at least one medicine pack; a medicinal information analysis subsystem to compare processed medicinal information in real-time with historical medicinal information stored in a medicinal information database, to identify a plurality of parameters associated with the at least one medicine pack, to categorise the at least one medicine pack into at least one category; a medicinal information notification subsystem to notify categorised medicinal information corresponding to a plurality of users. FIG. 1

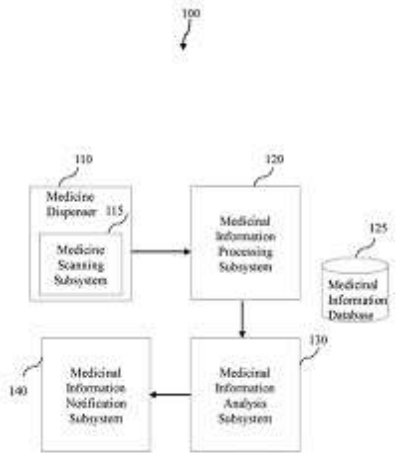

FIG. 1

No. of Pages : 26 No. of Claims : 10

(12) PATENT APPLICATION PUBLICATION
(19) INDIA
(22) Date of filing of Application :27/12/2019
(21) Application No.201921054172 A
(43) Publication Date : 02/07/2021

(54) Title of the invention : PHARMACEUTICAL COMPOSITION COMPRISING (R)-2-AMINO-3- PHENYLPROPYL CARBAMATE

(51) International classification	:G01N0033533000, H05B0031000000, B01J0020286000, C02F0003280000, B63C0007260000
(31) Priority Document No	:NA
(32) Priority Date	:NA
(33) Name of priority country	:NA
(86) International Application No	:NA
Filing Date	:NA
(87) International Publication No	: NA
(61) Patent of Addition to Application Number	:NA
Filing Date	:NA
(62) Divisional to Application Number	:NA
Filing Date	:NA

(71)**Name of Applicant :**
1)Alkem Laboratories Ltd
Address of Applicant :Devashish Alkem House, Senapati Bapat Marg, Lower Parel, Mumbai Maharashtra India
(72)**Name of Inventor :**
1)Md.Rizwan
2)Prashant M.Mandaogade
3)Ulhas Dhuppad
4)Avinash Pawar
5)Satyanarayana Tallam

(57) Abstract :
The present invention relates to a solid oral formulation of (R)-2-amino-3-phenylpropyl carbamate, the formulation comprising (a) (R)-2-amino-3-phenylpropyl carbamate in a concentration of about 60-85% w/w, (b) binder in a concentration of about 5-30% w/w and (c) one/more pharmaceutically acceptable excipients.

No. of Pages : 27 No. of Claims : 14

(12) PATENT APPLICATION PUBLICATION
(21) Application No.201921054193 A
(19) INDIA
(22) Date of filing of Application :27/12/2019
(43) Publication Date : 02/07/2021

(54) Title of the invention : NOVEL QUINOLIZIN BASED ANTI-LEISHMANIAL COMPOUNDS

(51) International classification	:C07D0405140000, A61K0031352000, A61K0031277000, C07D0403040000, C07D0239420000
(31) Priority Document No	:NA
(32) Priority Date	:NA
(33) Name of priority country	:NA
(86) International Application No	:NA
Filing Date	:NA
(87) International Publication No	: NA
(61) Patent of Addition to Application Number	:NA
Filing Date	:NA
(62) Divisional to Application Number	:NA
Filing Date	:NA

(71)**Name of Applicant :**
1)NATIONAL CENTRE FOR CELL SCIENCE
Address of Applicant :NCCS Complex, Savitribai Phule Pune University Campus, Ganeshkhind Road, Pune 411007, Maharashtra State, INDIA Maharashtra India
(72)**Name of Inventor :**
1)SINGH, Shailza
2)CHAUHAN, Nutan

(57) Abstract :
ABSTRACT NOVEL QUINOLIZIN BASED ANTI-LEISHMANIAL COMPOUNDS The present invention provides compounds for inhibition of Leishmaniasis, a process for synthesis of the compounds, compositions comprising the said compounds and use of the compounds for inhibition and treatment of Leishmaniasis.

No. of Pages : 57 No. of Claims : 9

(12) PATENT APPLICATION PUBLICATION
(19) INDIA
(22) Date of filing of Application :27/12/2019

(21) Application No.201921054204 A
(43) Publication Date : 02/07/2021

(54) Title of the invention : A SYSTEM FOR THE MEASUREMENT AND INDICATION OF MULTIPLE/DIFFERENT REGION'S OR COUNTRY'S STANDARD TIME

(51) International classification	:G01N0015140000, H04W0076140000, H04M0001725000, G04F0010000000, H04W0048160000
(31) Priority Document No	:NA
(32) Priority Date	:NA
(33) Name of priority country	:NA
(86) International Application No	:NA
Filing Date	:NA
(87) International Publication No	: NA
(61) Patent of Addition to Application Number	:NA
Filing Date	:NA
(62) Divisional to Application Number	:NA
Filing Date	:NA

(71)**Name of Applicant :**
1)HARISH UMASHANKAR TIWARI
Address of Applicant :PIMPRI CHINCHWAD COLLEGE OF ENGINEERING & RESEARCH, PLOT B, SURVEY NO. 110(P), LAXMINAGAR RAVET,PUNE-412101 Maharashtra India
2)AMRUTA HARISH TIWARI
(72)**Name of Inventor :**
1)HARISH UMASHANKAR TIWARI
2)AMRUTA HARISH TIWARI

(57) Abstract :
Disclosed herein is a system for the measurement and display of time for different/multiple countries or regions (100), with rotating dials and fixed pointer the system (100) comprising of means to measure time in second minutes and hours. The system of the present subject matter indicates time by measuring the relative positions of rotating dial with respect to a fixed pointer. The time is measured in second hour and minutes by using three rotating dials. The dials are marked with time indicating numbers like 1 to 12 for hours and o to 60 for minute and seconds. The system of the present subject matter gives time of a particular country or region also indicates time for more than one country or region simultaneously. It gives an entire new type of watch or clock where there are no moving or rotating hands of conventional watches.

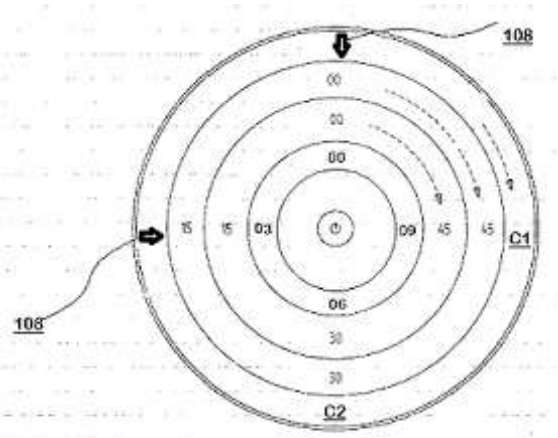

FIGURE 1

No. of Pages : 15 No. of Claims : 12

(12) PATENT APPLICATION PUBLICATION
(19) INDIA
(22) Date of filing of Application :27/12/2019
(21) Application No.201921054227 A
(43) Publication Date : 02/07/2021

(54) Title of the invention : AIR CONDITIONER HAVING AN AUTOMATED AIR PURIFIER

(51) International classification	:H01M0010440000, G11B0017049000, G03G0015080000, A24D0003060000, B65D0006220000	(71)**Name of Applicant :** **1)BLUE STAR LIMITED** Address of Applicant :Kasturi Buildings, Mohan T. Advani Chowk, Jamshetji Tata Road, Mumbai-400020, Maharashtra, India Maharashtra India
(31) Priority Document No	:NA	(72)**Name of Inventor :**
(32) Priority Date	:NA	**1)Indraneel Samanta**
(33) Name of priority country	:NA	
(86) International Application No	:NA	
Filing Date	:NA	
(87) International Publication No	: NA	
(61) Patent of Addition to Application Number	:NA	
Filing Date	:NA	
(62) Divisional to Application Number	:NA	
Filing Date	:NA	

(57) Abstract :
The present invention relates to an air conditioner having an automated air purifier to provide both air conditioning and air purification in a confined environment. The air purifier according to the invention is integrated in an indoor unit (IDU) of the air conditioner, and comprises a composite filter assembly (2) having a mesh cage (4) and a composite filter (6), wherein the composite filter (6) is clamped or pinned to the mesh cage (4), a prefilter (8) is configured to accommodate the composite filter assembly (2), wherein the mesh cage (4) has design features (4a, 4b) to fix the composite filter assembly (2) to the prefilter (8), and a filter feedback unit mounted on the composite filter assembly (2) and at least comprising an air quality monitor unit, a comparing unit and a control unit, for measuring, and displaying the particulate matter (PM) 2.5 levels in the air stream. For publication - figure 3

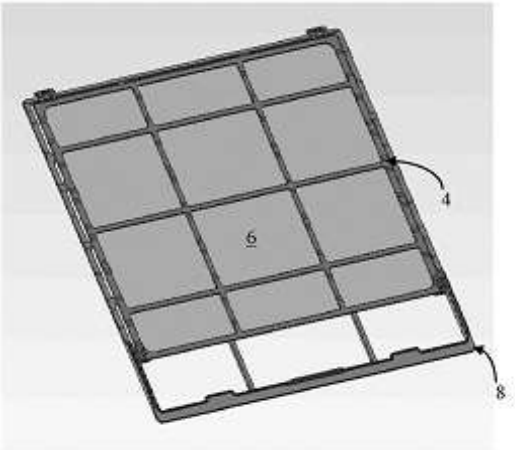

Figure 3

No. of Pages : 18 No. of Claims : 8

(12) PATENT APPLICATION PUBLICATION
(21) Application No.201921054247 A
(19) INDIA
(22) Date of filing of Application :27/12/2019
(43) Publication Date : 02/07/2021

(54) Title of the invention : A CIRCUIT BREAKER WITH A CALIBRATION MECHANISM FOR THERMO-MAGNETIC RELEASE UNIT

(51) International classification	:H01H0050200000, H01H0071240000, H01H0050560000, H01H0071040000, H01H0009020000	(71)**Name of Applicant :** **1)Larsen & Toubro Limited** Address of Applicant :L&T House, Ballard Estate, P.O Box No. 278, Mumbai- 400001, Maharashtra, India. Maharashtra India
(31) Priority Document No	:NA	(72)**Name of Inventor :** **1)VEERASAMY RAMASAMY** **2)GAYATHRIDEVI SUBBAIA**
(32) Priority Date	:NA	
(33) Name of priority country	:NA	
(86) International Application No	:NA	
Filing Date	:NA	
(87) International Publication No	: NA	
(61) Patent of Addition to Application Number	:NA	
Filing Date	:NA	
(62) Divisional to Application Number	:NA	
Filing Date	:NA	

(57) Abstract :
The present disclosure relates to a calibration mechanism for thermo-magnetic release of a circuit breaker. The circuit breaker includes a magnetic release having a fixed core 102, and a moving core 104 with an air gap between them. The moving core 104 is configured to move with respect to the fixed core 102 through the air gap when a current flowing through the circuit breaker crosses a predefined limit to actuate a magnetic shaft 106, which in turn trips the circuit breaker. The moving core 104 incorporates a first screw 110 to to adjust the air gap between the moving core 104 and the fixed core 102,and also adjust a spring force of the springs 204 associated with the moving core 104. The moving core 104 further includes a second screw 112 to adjust an impact gap between the moving core 104 and the magnetic shaft 106.

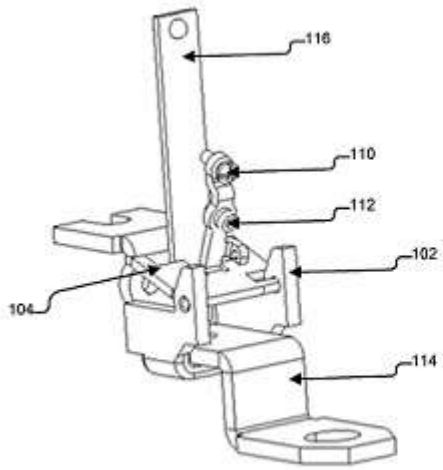

FIG. 1A

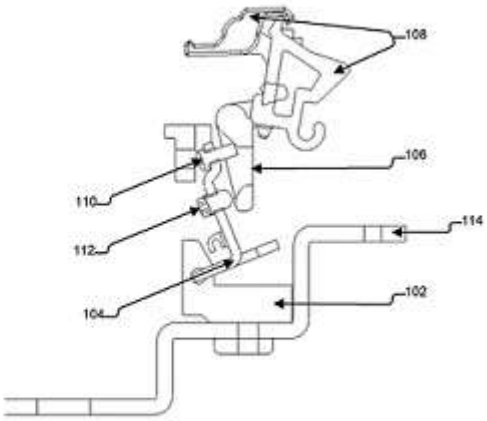

FIG. 1C

No. of Pages : 22 No. of Claims : 9

(12) PATENT APPLICATION PUBLICATION
(19) INDIA
(22) Date of filing of Application :27/12/2019
(21) Application No.201921054290 A
(43) Publication Date : 02/07/2021

(54) Title of the invention : ROD STYLE LINEAR ACTUATOR

(51) International classification	:H02K0007060000, F16H0025200000, F16H0019060000, G01N0001380000, F16H0025240000
(31) Priority Document No	:NA
(32) Priority Date	:NA
(33) Name of priority country	:NA
(86) International Application No	:NA
Filing Date	:NA
(87) International Publication No	: NA
(61) Patent of Addition to Application Number	:NA
Filing Date	:NA
(62) Divisional to Application Number	:NA
Filing Date	:NA

(71)**Name of Applicant :**
1)BHOLANATH PRECISION ENGINEERING PVT. LTD
Address of Applicant :BHOLANATH PRECISION ENGINEERING PVT. LTD., PLOT NO. 1, GUT NO. 203, DAHAGAON WADA ROAD, OFF MUMBAI-NASHIK HIGHWAY, TAL-SHAHAPUR, DIST-THANE-421604, MAHARASHTRA, INDIA Maharashtra India
(72)**Name of Inventor :**
1)AMBAR HIRALAL KOIRI
2)VIVEK HIRALAL KOIRI

(57) Abstract :
ROD STYLE LINEAR ACTUATOR The present invention introduces a modified electric, compact and portable rod style linear actuator (100) for lifting or pushing a very high load. More preferably, the present invention is a new technology for powering a linear actuator for heavy weight lifting comprising of a cylindrical housing (5), a flange (2, 1), a piston rod (7) configured to provide push or pull movement in linear direction by protruding out of the cylindrical housing (5), a screw (10) rotating in axial direction having helical groove on external surface and mounted inside the thrust/piston rod (7), a nut (8) mounted on grooves of said screw (10), a key (11) to prevent rotation of nut (8) and to provide linear motion to said nut, a top bearing (3) configured to moving piston rod (7), bottom bearing (4) configured to both end of the said screw (10), a top fix bush (6) and a bottom movable bush (9). Figure No. 5.

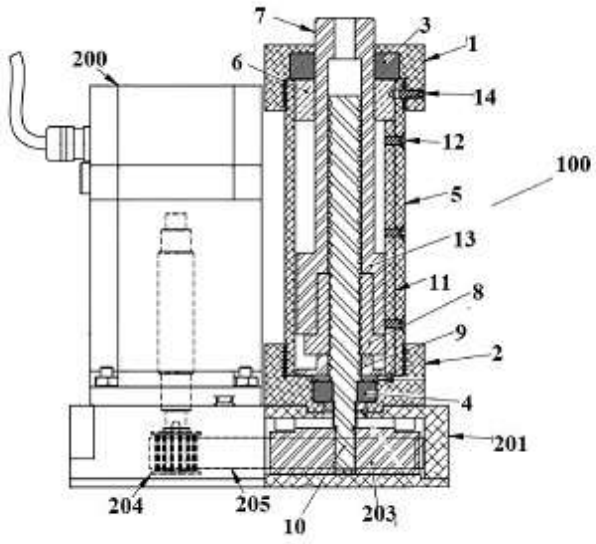

Figure No. 5

No. of Pages : 25 No. of Claims : 14

(12) PATENT APPLICATION PUBLICATION
(19) INDIA
(22) Date of filing of Application :28/12/2019

(21) Application No.201921054314 A
(43) Publication Date : 02/07/2021

(54) Title of the invention : SYSTEM FOR ESTIMATING THERMO-MECHANICALLY INDUCED CONSOLIDATION OF SOILS

(51) International classification	:G01N0033240000, G01N0003080000, G01N0003100000, E02D0001020000, H01L0025070000	(71)**Name of Applicant :** **1)Indian Institute of Technology Bombay** Address of Applicant :Indian Institute of Technology Bombay, Powai, Mumbai 400076, Maharashtra, India. Maharashtra India (72)**Name of Inventor :** **1)Singh, Devendra Narain** **2)Shetty, Rakshith**
(31) Priority Document No	:NA	
(32) Priority Date	:NA	
(33) Name of priority country	:NA	
(86) International Application No	:NA	
Filing Date	:NA	
(87) International Publication No	: NA	
(61) Patent of Addition to Application Number	:NA	
Filing Date	:NA	
(62) Divisional to Application Number	:NA	
Filing Date	:NA	

(57) Abstract :
Disclosed is a system for estimating thermo-mechanically induced consolidation of soils. The system comprises a base plate with a plurality of tensiometer slots, a bottom porous disc placed on the base plate, a specimen ring with a plurality of pressure ports, placed on the bottom porous disc to hold a soil specimen and each pressure port comprises a special purpose connector, a top porous disc placed on the soil specimen and an outer casing enclosing the bottom porous disc, the specimen ring and the top porous disc placed on the base plate. The system further comprises a loading piston connected to a load cell attached to a Universal testing machine and a plurality of suction tensiometers placed in the plurality of tensiometer slots. The system computes consolidation of the soil under various thermo-mechanical stress loadings along with measurement of pore-water pressure and suction generated in the soil specimen.

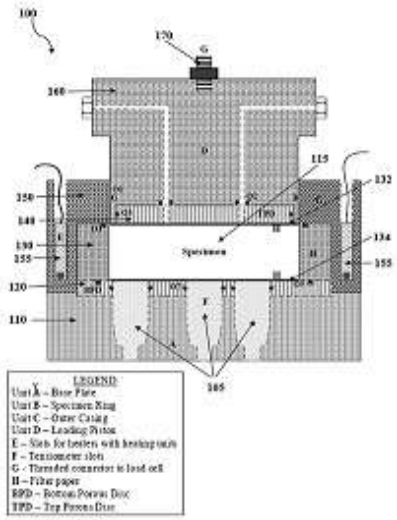

Figure 1

No. of Pages : 24 No. of Claims : 14

(12) PATENT APPLICATION PUBLICATION
(19) INDIA
(22) Date of filing of Application :28/12/2019

(21) Application No.201921054322 A
(43) Publication Date : 02/07/2021

(54) Title of the invention : IOT-BASED GARBAGE SYSTEM FOR EFFICIENT FOOD WASTE MANAGEMENT •

(51) International classification	:H04W0004900000, H04Q0009000000, C05F0017020000, B65F0001140000, B09B0003000000	(71)**Name of Applicant :** **1)MESBRO TECHNOLOGIES PRIVATE LIMITED** Address of Applicant :Flat no C/904, Geomatrix Dev, Plot no 29, Sector 25, Kamothe, Raigarh-410209, Maharashtra, India Maharashtra India
(31) Priority Document No	:NA	(72)**Name of Inventor :**
(32) Priority Date	:NA	**1)Mr. Bhaskar Vijay Ajgaonkar**
(33) Name of priority country	:NA	
(86) International Application No	:NA	
Filing Date	:NA	
(87) International Publication No	: NA	
(61) Patent of Addition to Application Number	:NA	
Filing Date	:NA	
(62) Divisional to Application Number	:NA	
Filing Date	:NA	

(57) Abstract :
Accordingly, an IOT -based garbage system for efficient food waste management is disclosed. The system for efficient food waste management comprising of; detecting the levels of waste in the dust bin using ultrasonic sensor; transferring all the information to GPS module attached to garbage monitoring system present in the website; segregating all the waste based on moisture level automatically; and receiving automatic information of the waste to the vehicles.

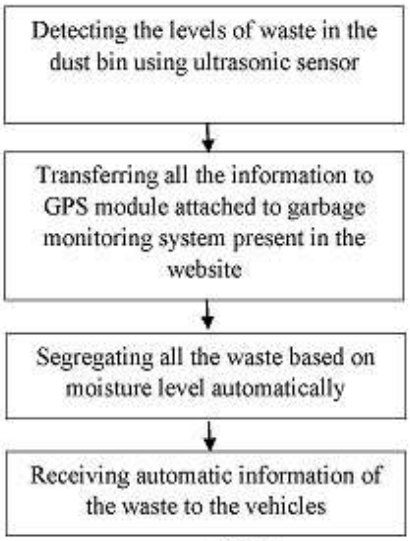

FIG 1

No. of Pages : 11 No. of Claims : 9

(12) PATENT APPLICATION PUBLICATION
(19) INDIA
(22) Date of filing of Application :28/12/2019

(21) Application No.201921054323 A
(43) Publication Date : 02/07/2021

(54) Title of the invention : SMART AGRICULTURE SYSTEM USING IOT •

(51) International classification	:A01G0025160000, G01N0033240000, A01C0021000000, A01B0079000000, G06Q0050020000	(71)**Name of Applicant :** **1)MESBRO TECHNOLOGIES PRIVATE LIMITED** Address of Applicant :Flat no C/904, Geomatrix Dev, Plot no 29, Sector 25, Kamothe, Raigarh-410209, Maharashtra, India Maharashtra India
(31) Priority Document No	:NA	(72)**Name of Inventor :**
(32) Priority Date	:NA	**1)Mr. Bhaskar Vijay Ajgaonkar**
(33) Name of priority country	:NA	
(86) International Application No	:NA	
Filing Date	:NA	
(87) International Publication No	: NA	
(61) Patent of Addition to Application Number	:NA	
Filing Date	:NA	
(62) Divisional to Application Number	:NA	
Filing Date	:NA	

(57) Abstract :
Accordingly, an agricultural system using IOT which can monitor agricultural condition is disclosed. An agricultural system using IOT for monitoring agricultural condition comprising of; control box; web based application related with the website and mobile application. The control box is a waterproof box keeping all the electronic devices in waterproof condition. The control box could be located anywhere in farm or near the farm, having the soil moisture sensors, solenoid valve, and an ultrasonic sensor connected to the control box. IoTs is applied to the soil moisture sensors to measure the humidity of crop soil and to control switching on-and-off water sprinklers automatically.

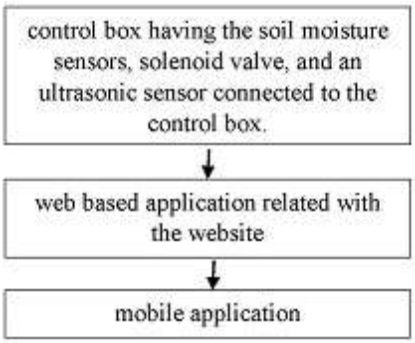

FIG 1

No. of Pages : 11 No. of Claims : 7

(12) PATENT APPLICATION PUBLICATION
(19) INDIA
(22) Date of filing of Application :28/12/2019

(21) Application No.201921054324 A
(43) Publication Date : 02/07/2021

(54) Title of the invention : ONLINE RECRUITMENT SYSTEM USING BIG DATA TECHNOLOGY •

(51) International classification	:G06Q0010100000, H04M0001725000, G06F0016951000, G06F0011140000, G06F0016953500	(71)**Name of Applicant :** **1)MESBRO TECHNOLOGIES PRIVATE LIMITED** Address of Applicant :Flat no C/904, Geomatrix Dev, Plot no 29, Sector 25, Kamothe, Raigarh-410209, Maharashtra, India Maharashtra India
(31) Priority Document No	:NA	(72)**Name of Inventor :**
(32) Priority Date	:NA	**1)Mr. Bhaskar Vijay Ajgaonkar**
(33) Name of priority country	:NA	
(86) International Application No	:NA	
Filing Date	:NA	
(87) International Publication No	: NA	
(61) Patent of Addition to Application Number	:NA	
Filing Date	:NA	
(62) Divisional to Application Number	:NA	
Filing Date	:NA	

(57) Abstract :
The present invention discloses the online recruitment system using big data technology. The web application for online recruitment created. Jobseeker check in website. And has to create profile. Then search for vacancy by using filters. The list of preferred vacancies is shown to jobseeker. Jobseeker applies for particular jobs. The employer got so many applications. With help of big data employer make a list of suitable candidates. And communicate with them using phone or mail.

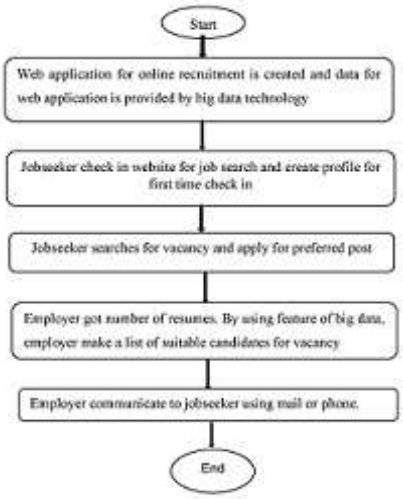

Fig. 1

No. of Pages : 10 No. of Claims : 5

(12) PATENT APPLICATION PUBLICATION
(19) INDIA
(22) Date of filing of Application :28/12/2019

(21) Application No.201921054325 A
(43) Publication Date : 02/07/2021

(54) Title of the invention : PEST CONTROL MANAGEMENT SYSTEM FOR FARMING USING AUGMENTED REALITY •

(51) International classification	:G06T0019000000, G06T0011000000, G06K0009000000, G06Q0050020000, G01C0011020000	(71)**Name of Applicant :** **1)MESBRO TECHNOLOGIES PRIVATE LIMITED** Address of Applicant :Flat no C/904, Geomatrix Dev, Plot no 29, Sector 25, Kamothe, Raigarh-410209, Maharashtra, India Maharashtra India
(31) Priority Document No	:NA	(72)**Name of Inventor :**
(32) Priority Date	:NA	**1)Mr. Bhaskar Vijay Ajgaonkar**
(33) Name of priority country	:NA	
(86) International Application No	:NA	
Filing Date	:NA	
(87) International Publication No	: NA	
(61) Patent of Addition to Application Number	:NA	
Filing Date	:NA	
(62) Divisional to Application Number	:NA	
Filing Date	:NA	

(57) Abstract :
The present invention discloses the pest control management system for farming using augmented reality technology. The raw image data of the crop capture using a first sensor. The raw image data transferred to a server. Processor generates geo-referenced data from the raw image data at the server. The geo-referenced data sent to a wireless device. The live image data of the crop is captured using a second sensor which is mounted on wireless device. The geo- referenced data overlaying on the live image data to generate the augmented reality view at the wireless device. Which identify type of pest and suggest treatment over it.

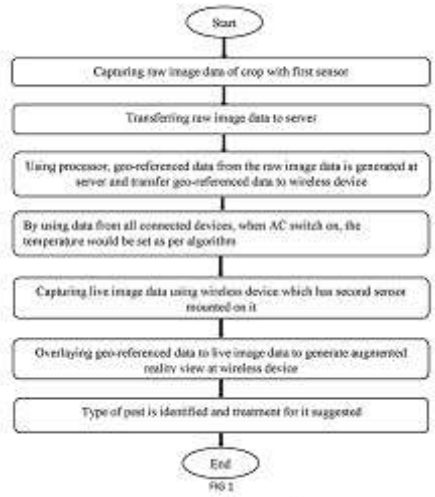

FIG 1

No. of Pages : 8 No. of Claims : 3

(12) PATENT APPLICATION PUBLICATION
(19) INDIA
(22) Date of filing of Application :28/12/2019

(21) Application No.201921054326 A
(43) Publication Date : 02/07/2021

(54) Title of the invention : EVENT MANAGEMENT SYSTEM USING INTERNET OF THINGS (IOT) •

(51) International classification	:H04L0029060000, H04L0029080000, G08G0001140000, H04W0004700000, G06Q0050100000	(71)**Name of Applicant :** **1)MESBRO TECHNOLOGIES PRIVATE LIMITED** Address of Applicant :Flat no C/904, Geomatrix Dev, Plot no 29, Sector 25, Kamothe, Raigarh-410209, Maharashtra, India Maharashtra India
(31) Priority Document No	:NA	(72)**Name of Inventor :**
(32) Priority Date	:NA	**1)Mr. Bhaskar Vijay Ajgaonkar**
(33) Name of priority country	:NA	
(86) International Application No	:NA	
Filing Date	:NA	
(87) International Publication No	: NA	
(61) Patent of Addition to Application Number	:NA	
Filing Date	:NA	
(62) Divisional to Application Number	:NA	
Filing Date	:NA	

(57) Abstract :
Accordingly, an event management system using Internet of things (IOT) is disclosed. The present invention is an event management system using Internet of things comprising of; Providing automated online registrations through GPS in the smart phone/ WIFI connected to the website; Providing smart catering for the event; Providing enhanced security for the event through monitoring system fitted in the website; collecting data from any device by allowing them to collect useful information and to create a personalized experience for the audience; and providing smart parking to the attendees for detecting available parking spaces.

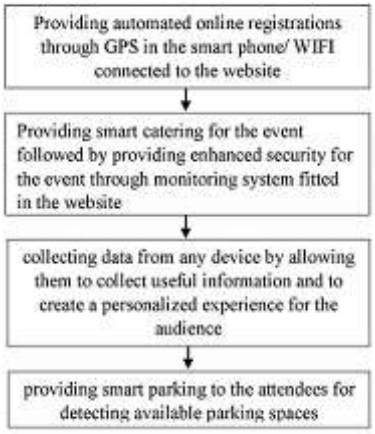

FIG 1

No. of Pages : 12 No. of Claims : 6

(12) PATENT APPLICATION PUBLICATION
(19) INDIA
(22) Date of filing of Application :28/12/2019

(21) Application No.201921054327 A
(43) Publication Date : 02/07/2021

(54) Title of the invention : AUTOMATIC AIR CONDITIONER SYSTEM USING INTERNET OF THINGS (IOT) •

(51) International classification	:H04W0084120000, H04L0012280000, G06N0020000000, G06N0005020000, G16H0040670000	(71)**Name of Applicant :** **1)MESBRO TECHNOLOGIES PRIVATE LIMITED** Address of Applicant :Flat no C/904, Geomatrix Dev, Plot no 29, Sector 25, Kamothe, Raigarh-410209, Maharashtra, India Maharashtra India
(31) Priority Document No	:NA	(72)**Name of Inventor :**
(32) Priority Date	:NA	**1)Mr. Bhaskar Vijay Ajgaonkar**
(33) Name of priority country	:NA	
(86) International Application No	:NA	
Filing Date	:NA	
(87) International Publication No	: NA	
(61) Patent of Addition to Application Number	:NA	
Filing Date	:NA	
(62) Divisional to Application Number	:NA	
Filing Date	:NA	

(57) Abstract :
The present invention discloses the automated air conditioner system using Internet of Things (IoT). All sensors, wi-fi modem, any electronic computing device are installed. Sensors should install outside of building. The artificial intelligence program should be saved on electronic device. The reading of all sensors is sent to cloud with Wi-Fi modem. As data changes from sensors, artificial intelligence program with the help of IoT set the temperature of air conditioner.

Fig. 1

No. of Pages : 8 No. of Claims : 1

(12) PATENT APPLICATION PUBLICATION
(19) INDIA
(22) Date of filing of Application :28/12/2019

(21) Application No.201921054328 A
(43) Publication Date : 02/07/2021

(54) Title of the invention : WEATHER INFORMATION SYSTEM FOR FARMING USING AUGMENTED REALITY TECHNOLOGY •

(51) International classification	:G06T0019000000, G01C0011020000, G06Q0050020000, G05B0015020000, G06K0009000000	(71)**Name of Applicant :** **1)MESBRO TECHNOLOGIES PRIVATE LIMITED** Address of Applicant :Flat no C/904, Geomatrix Dev, Plot no 29, Sector 25, Kamothe, Raigarh-410209, Maharashtra, India Maharashtra India
(31) Priority Document No	:NA	(72)**Name of Inventor :**
(32) Priority Date	:NA	**1)Mr. Bhaskar Vijay Ajgaonkar**
(33) Name of priority country	:NA	
(86) International Application No	:NA	
Filing Date	:NA	
(87) International Publication No	: NA	
(61) Patent of Addition to Application Number	:NA	
Filing Date	:NA	
(62) Divisional to Application Number	:NA	
Filing Date	:NA	

(57) Abstract :
The present invention discloses the weather information system for farming using augmented reality technology. The raw image data of the land captured using a first camera. The raw image data transferred to a server. The weather values from sensors are transferred to server. Processor generates geo-referenced data from the raw image data at the server. The geo-referenced data sent to a wireless device. The weather information sent to wireless device. The live image data of the crop is captured using a second sensor which is mounted on wireless device. The geo- referenced data overlaying on the live image data to generate the augmented reality view at the wireless device. Weather information can see on wireless device.

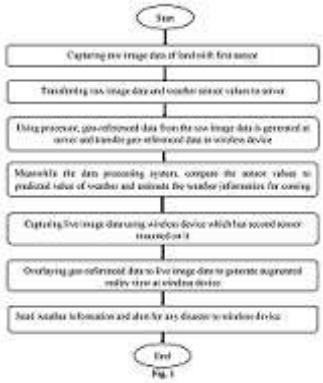

No. of Pages : 9 No. of Claims : 5

(12) PATENT APPLICATION PUBLICATION
(19) INDIA
(22) Date of filing of Application :28/12/2019

(21) Application No.201921054329 A
(43) Publication Date : 02/07/2021

(54) Title of the invention : A LIVE AGENT CHAT SYSTEM USING AN ARTIFICIAL INTELLIGENCE •

(51) International classification	:H04M0003510000, H04L0012180000, G06N0020000000, G06N0005020000, G06F0016951000	(71)**Name of Applicant :** **1)MESBRO TECHNOLOGIES PRIVATE LIMITED** Address of Applicant :Flat no C/904, Geomatrix Dev, Plot no 29, Sector 25, Kamothe, Raigarh-410209, Maharashtra, India Maharashtra India
(31) Priority Document No	:NA	(72)**Name of Inventor :**
(32) Priority Date	:NA	**1)Mr. Bhaskar Vijay Ajgaonkar**
(33) Name of priority country	:NA	
(86) International Application No	:NA	
Filing Date	:NA	
(87) International Publication No	: NA	
(61) Patent of Addition to Application Number	:NA	
Filing Date	:NA	
(62) Divisional to Application Number	:NA	
Filing Date	:NA	

(57) Abstract :
Accordingly, the present invention is a live agent chat system which can handle large number of customer queries is disclosed. The live agent chat system using an artificial intelligence comprising of; Registering of the customer in the website; Raising their queries related to products and services offered by the website; Categorizing the customers as per their queries distribution; Saving automatic response in the computer memory for answering similar kind of questions/inquires; Responding to customers through user interface using an artificial intelligence.

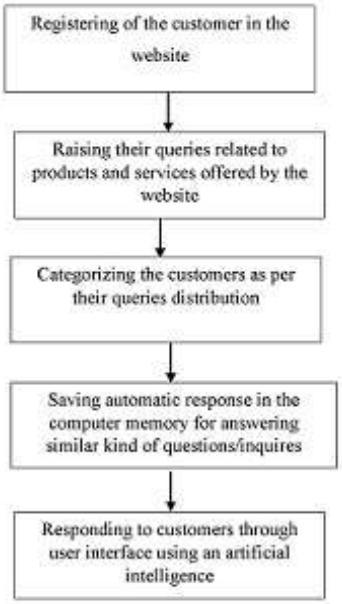

FIG 1

No. of Pages : 11 No. of Claims : 6

(12) PATENT APPLICATION PUBLICATION
(19) INDIA
(22) Date of filing of Application :28/12/2019

(21) Application No.201921054330 A
(43) Publication Date : 02/07/2021

(54) Title of the invention : DATA SECURITY SYSTEM FOR SECURELY STORING DATA •

(51) International classification	:G06F0021620000, H04L0029060000, G06F0021600000, H04L0029080000, G06F0021790000	(71)**Name of Applicant :** **1)MESBRO TECHNOLOGIES PRIVATE LIMITED** Address of Applicant :Flat no C/904, Geomatrix Dev, Plot no 29, Sector 25, Kamothe, Raigarh-410209, Maharashtra, India Maharashtra India
(31) Priority Document No	:NA	(72)**Name of Inventor :**
(32) Priority Date	:NA	**1)Mr. Bhaskar Vijay Ajgaonkar**
(33) Name of priority country	:NA	
(86) International Application No	:NA	
Filing Date	:NA	
(87) International Publication No	: NA	
(61) Patent of Addition to Application Number	:NA	
Filing Date	:NA	
(62) Divisional to Application Number	:NA	
Filing Date	:NA	

(57) Abstract :
Accordingly, a data security system for securely storing data is disclosed. The system comprising of; Registering the user with database of the website; Filtering the data from data input device (personal computer); Extracting the security sensitive data and storing it separately in another memory segment; Saving the security sensitive data in different memory segment of a user computer attached with the database of the website; Removing the other data and security sensitive data followed by Encrypting all the data to enhance security; and Sending security alerts from time to time.

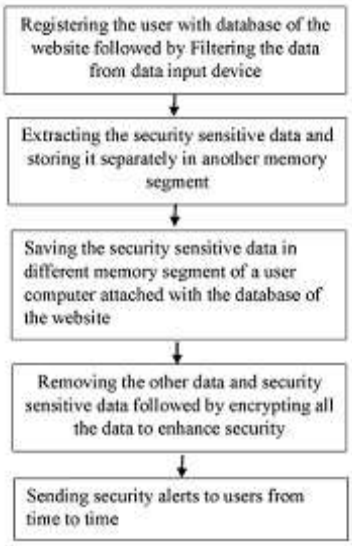

FIG 1

No. of Pages : 10 No. of Claims : 3

(12) PATENT APPLICATION PUBLICATION
(19) INDIA
(22) Date of filing of Application :28/12/2019

(21) Application No.201921054331 A
(43) Publication Date : 02/07/2021

(54) Title of the invention : SYSTEM FOR FRAUD DETECTION USING IOT (INTERNET OF THINGS). •

(51) International classification	:G06N0020000000, G06Q0020400000, H04M0015000000, G06K0009620000, G06F0016000000	(71)**Name of Applicant :** **1)MESBRO TECHNOLOGIES PRIVATE LIMITED** Address of Applicant :Flat no C/904, Geomatrix Dev, Plot no 29, Sector 25, Kamothe, Raigarh-410209, Maharashtra, India Maharashtra India
(31) Priority Document No	:NA	(72)**Name of Inventor :**
(32) Priority Date	:NA	**1)Mr. Bhaskar Vijay Ajgaonkar**
(33) Name of priority country	:NA	
(86) International Application No	:NA	
Filing Date	:NA	
(87) International Publication No	: NA	
(61) Patent of Addition to Application Number	:NA	
Filing Date	:NA	
(62) Divisional to Application Number	:NA	
Filing Date	:NA	

(57) Abstract :
Accordingly, a system for Financial Fraud Detection under IoT Environment using artificial intelligence is disclosed. A system for fraud detection using IOT comprising of; collecting of the data internal database of the website, data preprocessing, detection of fraud data using validation system ;feature selection, application of classification of fraud, and validation of the data

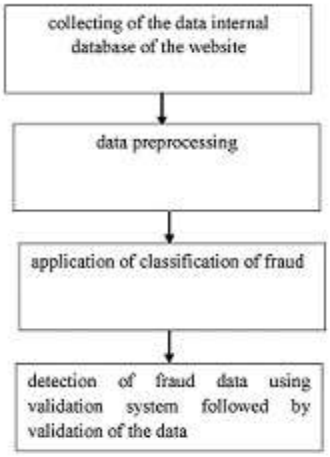

FIG 1

No. of Pages : 12 No. of Claims : 8

(12) PATENT APPLICATION PUBLICATION
(19) INDIA
(22) Date of filing of Application :28/12/2019

(21) Application No.201921054332 A
(43) Publication Date : 02/07/2021

(54) Title of the invention : LAND EXAMINATION SYSTEM FOR FARMING USING AUGMENTED REALITY TECHNOLOGY •

(51) International classification	:G06T0019000000, G06T0011000000, G01C0011020000, G06K0009000000, G06Q0050020000	(71)**Name of Applicant :** **1)MESBRO TECHNOLOGIES PRIVATE LIMITED** Address of Applicant :Flat no C/904, Geomatrix Dev, Plot no 29, Sector 25, Kamothe, Raigarh-410209, Maharashtra, India Maharashtra India
(31) Priority Document No	:NA	(72)**Name of Inventor :**
(32) Priority Date	:NA	**1)Mr. Bhaskar Vijay Ajgaonkar**
(33) Name of priority country	:NA	
(86) International Application No	:NA	
Filing Date	:NA	
(87) International Publication No	: NA	
(61) Patent of Addition to Application Number	:NA	
Filing Date	:NA	
(62) Divisional to Application Number	:NA	
Filing Date	:NA	

(57) Abstract :
The present invention discloses the land examination system for farming using augmented reality technology. The raw image data of the crop capture using a first camera. The raw image data transferred to a server. The pH value from sensor is transferred to server. Processor generates geo-referenced data from the raw image data at the server. The geo-referenced data sent to a wireless device. The live image data of the crop is captured using a second sensor which is mounted on wireless device. The geo- referenced data overlaying on the live image data to generate the augmented reality view at the wireless device. Meanwhile the report of land examination and name of suitable crop is sent to wireless device.

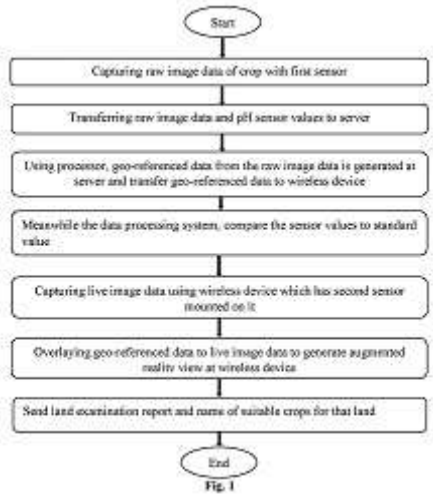

Fig. 1

No. of Pages : 9 No. of Claims : 3

(12) PATENT APPLICATION PUBLICATION
(19) INDIA
(22) Date of filing of Application :28/12/2019

(21) Application No.201921054351 A
(43) Publication Date : 02/07/2021

(54) Title of the invention : A MECHANISM FOR ANCHORING AND ARTICULATING A SEAT ASSEMBLY OF A VEHICLE INTERIOR

(51) International classification	:B60N0002900000, B60N0002300000, B60N0002015000, B60N0002240000, B60R0022020000	(71)**Name of Applicant :** **1)FAURECIA INDIA PRIVATE LIMITED** Address of Applicant :Plot No.T-187, Pimpri Industrial Area (B.G. Block), Behind Bhosari Police Station, Bhosari, Pune, 411026 MH. India Maharashtra India
(31) Priority Document No	:NA	(72)**Name of Inventor :**
(32) Priority Date	:NA	**1)KALKOTI, Shrikant**
(33) Name of priority country	:NA	
(86) International Application No	:NA	
Filing Date	:NA	
(87) International Publication No	: NA	
(61) Patent of Addition to Application Number	:NA	
Filing Date	:NA	
(62) Divisional to Application Number	:NA	
Filing Date	:NA	

(57) Abstract :
The present invention provides a mechanism 100 for anchoring and articulating a seat assembly 200 of a vehicle interior (not shown). The existing anchoring and articulating mechanisms may cause injuries to the occupants when existing seat assemblies are tumbled. The mechanism 100 provided by the present invention includes an articulation unit 20 and an anchoring unit 40. The articulation unit 20 enables swivelable movements of the seat assembly 200 around an axis 22b of a pivot shaft 22 mounted on a front portion 200b of the seat assembly between a first position 100a and one or more second positions 100b or 100c. Further, the anchoring unit 40 arranged at the front portion 200b of the seat assembly 200 for anchoring the seat assembly 200 at positions 1000a, 100b or 100c. The mechanism 100 reduces injuries to the occupants when the seat assembly 200 is tumbled. Figure (3)

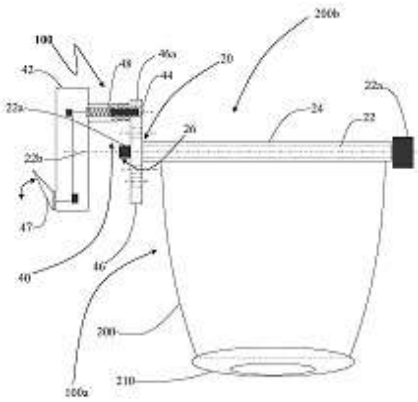

Figure 3

No. of Pages : 33 No. of Claims : 10

(12) PATENT APPLICATION PUBLICATION
(19) INDIA
(22) Date of filing of Application :30/12/2019
(21) Application No.201921054384 A
(43) Publication Date : 02/07/2021

(54) Title of the invention : DRUG IN ADHESIVE BASED TRANSDERMAL FORMULATION OF ATOMOXETINE HYDROCHLORIDE

(51) International classification	:A61K0009700000, C07C0217480000, A61K0047100000, A61K0009060000, A61K0031138000
(31) Priority Document No	:NA
(32) Priority Date	:NA
(33) Name of priority country	:NA
(86) International Application No	:NA
Filing Date	:NA
(87) International Publication No	: NA
(61) Patent of Addition to Application Number	:NA
Filing Date	:NA
(62) Divisional to Application Number	:NA
Filing Date	:NA

(71)**Name of Applicant :**
1)BAROT TULARAM BALDEVSINH
Address of Applicant :BUDDHDEV KUTIR, NILKANTH SOCIETY, DEVSAR(BILIMORA), GUJARAT-396380, INDIA. Gujarat India
2)DR. BHUPENDRA G. PRAJAPATI
(72)**Name of Inventor :**
1)BAROT TULARAM BALDEVSINH
2)DR. BHUPENDRA G. PRAJAPATI

(57) Abstract :
Attention Deficit Hyperactivity Disorder (ADHD) is a psychological disorder which especially is observed in children. Atomoxetine Hydrochloride is used in the therapy of ADHD. At present, Atomoxetine Hydrochloride is available in tablet and capsule form. However, the base Atomoxetine can also be used for the same purpose. Current invention -transdermal formulation overcomes the poor patient compliance of oral formulation especially in children patients. The invention describes the formulation where Atomoxetine Hydrochloride & Atomoxetine is targeted to be delivered via transdermal route. Here. Atomoxetine Hydrochloride & Atomoxetine are used as active ingredient as per its dose. Acrylate copolymers are used as Pressure Sensitive Adhesive, PVP K 30 is used as crystallization inhibitor, Diethylene glycol monoethyl ether is used as Penetration Enhancer.

No. of Pages : 6 No. of Claims : 2

(12) PATENT APPLICATION PUBLICATION
(21) Application No.201921054412 A
(19) INDIA
(22) Date of filing of Application :30/12/2019
(43) Publication Date : 02/07/2021

(54) Title of the invention : INTER-ROW WEED SLASHER

(51) International classification	:H01M0010440000, G11B0017049000, G03G0015080000, A24D0003060000, B65D0006220000	(71)**Name of Applicant :** **1)DR. PANJABRAO DESHMUKH KRISHI VIDYAPEETH, AKOLA** Address of Applicant :P.O. Krishi Nagar, Akola - 444 104 Maharashtra, India Maharashtra India
(31) Priority Document No	:NA	(72)**Name of Inventor :**
(32) Priority Date	:NA	**1)Dr. Vilas Madhukar Bhale**
(33) Name of priority country	:NA	**2)Dr. Satish Krishnarao Thakare**
(86) International Application No	:NA	**3)Mr. Jay Prakash Pathak**
Filing Date	:NA	**4)Mr. Avinash Vitthal Gajakos**
(87) International Publication No	: NA	**5)Mrs. Mrudulata Manoj Deshmukh**
(61) Patent of Addition to Application Number	:NA	**6)Mr. Harish Digambar Nahate**
Filing Date	:NA	**7)Mr. Mahesh Damodhar Nikam**
(62) Divisional to Application Number	:NA	
Filing Date	:NA	

(57) Abstract :
ABSTRACT Title: Inter-row Weed Slasher An inter-row weed slasher (100) comprises of a main frame (10), a hitch frame (20), a pair of support wheel (30), a gear box (40), a main shaft (50), a power transmission system (60), a rotor shaft (70), a plurality of flanges (80), a blade assembly unit (90) and a suspension unit (110); wherein the main frame (10) has a provision of adjusting it for different row spacing depending on the variety of crops; and also has a provision of adjusting the working depth above the ground depending on the intensity of weed infestation. The weed slasher cuts the weed some height above ground level which can be used for mulching and other benefits to the plants. Refer Fig. 1

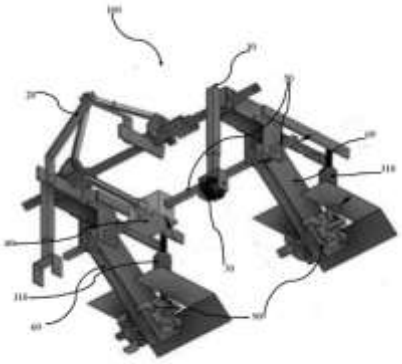

Fig. 1

No. of Pages : 18 No. of Claims : 10

(12) PATENT APPLICATION PUBLICATION
(19) INDIA
(22) Date of filing of Application :30/12/2019

(21) Application No.201921054417 A
(43) Publication Date : 02/07/2021

(54) Title of the invention : POD SHELLING MACHINE

(51) International classification	:H01M0010440000, G11B0017049000, G03G0015080000, A24D0003060000, B65D0006220000	(71)**Name of Applicant :** **1)DR. PANJABRAO DESHMUKH KRISHI VIDYAPEETH, AKOLA** Address of Applicant :P.O. Krishi Nagar, Akola - 444 104 Maharashtra, India Maharashtra India
(31) Priority Document No	:NA	(72)**Name of Inventor :**
(32) Priority Date	:NA	**1)Dr. Pradip Atmaram Borkar**
(33) Name of priority country	:NA	**2)Dr. Rajesh Prabhakar Murumkar**
(86) International Application No	:NA	**3)Mr. Mahendrasingh Ramansingh Rajput**
Filing Date	:NA	**4)Mr. Dnyaneshwar Balkrushna Ghawghawe**
(87) International Publication No	: NA	
(61) Patent of Addition to Application Number	:NA	
Filing Date	:NA	
(62) Divisional to Application Number	:NA	
Filing Date	:NA	

(57) Abstract :
ABSTRACT Title : Pod Shelling Machine A pod shelling machine (100) comprising of a feeding unit (10), a shelling unit (12), a separation unit (14), a structural frame (16), a power source (18) and a power transmission unit (20) wherein these units (10, 12, 14, 18 and 20) are mounted on the structural frame (16) in such way that each unit communicates with the other unit in a sequential manner with the help of power transmission unit (20) for shelling the pod. The feeding unit (10) has a guiding cover (26) and an eccentric mechanism (22) and is mounted at top of the structural frame (16), with the support of a plurality of brackets (36), at an angle in the range of 11.5 to 13.5 degree with the horizontal plane. The provision of clearance adjustment between the rollers makes the machine versatile and adaptable to various types of pods, different varieties of pods, and various sizes of pods being shelled.

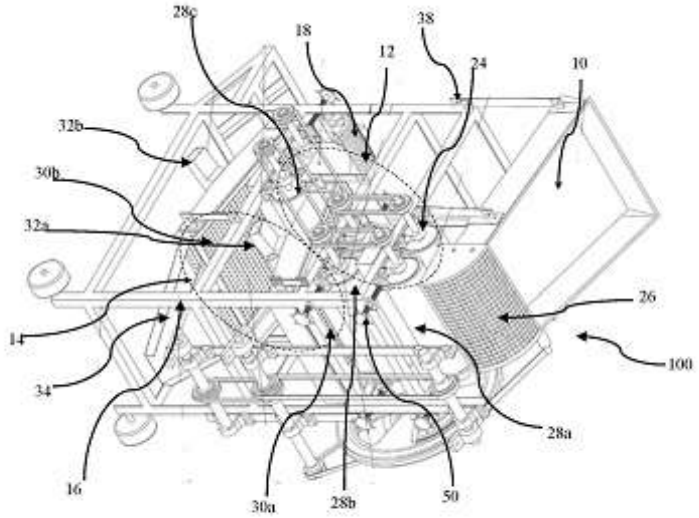

Fig. 1

No. of Pages : 30 No. of Claims : 10

(12) PATENT APPLICATION PUBLICATION
(19) INDIA
(22) Date of filing of Application :31/12/2019

(21) Application No.201921054578 A
(43) Publication Date : 02/07/2021

(54) Title of the invention : A RUBBER COMPOSITION AND A METHOD OF MAKING THE SAME

(51) International classification	:B60C0001000000, C08L0009060000, C08K0005000000, C08C0019250000, C08J0003220000
(31) Priority Document No	:NA
(32) Priority Date	:NA
(33) Name of priority country	:NA
(86) International Application No	:NA
Filing Date	:NA
(87) International Publication No	: NA
(61) Patent of Addition to Application Number	:NA
Filing Date	:NA
(62) Divisional to Application Number	:NA
Filing Date	:NA

(71)**Name of Applicant :**
1)Raychem RPG Pvt. Ltd
Address of Applicant :463, Dr Annie Besant Road, Worli, Mumbai, Maharashtra Maharashtra India
(72)**Name of Inventor :**
1)Sunita Mohapatra
2)Pallabi Sarkar

(57) Abstract :
A rubber composition including synthetic rubber, non-staining antioxidant ranging from 0.5 to 2 phr, a fire-retardant filler ranging from 30 to 120 phr, a reinforcing filler ranging from 2 to 10 phr and a curative agent ranging from 0.4 to 2.1 phr. The invention further provides a method of preparing the rubber composition of the present invention.

No. of Pages : 18 No. of Claims : 18

(12) PATENT APPLICATION PUBLICATION
(19) INDIA
(22) Date of filing of Application :31/12/2019

(21) Application No.201921054634 A
(43) Publication Date : 02/07/2021

(54) Title of the invention : AN EFFICIENT PROCESS FOR THE PREPARATION OF ERTUGLIFLOZIN L-PYROGLUTAMIC ACID AND INTERMEDIATES THEREOF

(51) International classification	:C07H0009040000, C07D0493080000, C07D0403120000, C07C0269060000, C07D0211020000	(71)**Name of Applicant :** **1)Hikal Limited** Address of Applicant :3A & 3B, International Biotech Park Hinjewadi, Pune Maharashtra India 411 057 Maharashtra India
(31) Priority Document No	:NA	(72)**Name of Inventor :**
(32) Priority Date	:NA	**1)Sudhir Nambiar**
(33) Name of priority country	:NA	**2)Goverdhan Gilla**
(86) International Application No	:NA	**3)Rahul Arvind Bhalerao**
Filing Date	:NA	**4)Kiran Avinash Bapat**
(87) International Publication No	: NA	**5)Mahesh Purushottam Devgirkar**
(61) Patent of Addition to Application Number	:NA	**6)Hemant Pimparkar**
Filing Date	:NA	**7)Anil Rambhau Pawar**
(62) Divisional to Application Number	:NA	**8)Rahul Bhimgonda Patil**
Filing Date	:NA	

(57) Abstract :
ABSTRACT AN EFFICIENT PROCESS FOR THE PREPARATION OF ERTUGLIFLOZINL-PYROGLUTAMIC ACID AND INTERMEDIATES THEREOF The present invention relates to an efficient process for the preparation of Ertugliflozin L-pyroglutamic acid of formula (I) and intermediate thereof, in environment friendly conditions. The present invention further relates to a process for the preparation of substantially pure intermediate of formula (IV). (I) (IV)

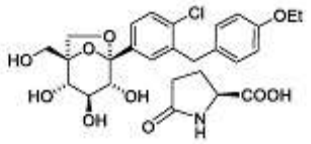

(I)

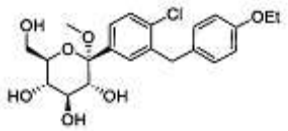

(IV)

No. of Pages : 25 No. of Claims : 12

(12) PATENT APPLICATION PUBLICATION
(19) INDIA
(22) Date of filing of Application :31/12/2019
(21) Application No.201921054699 A
(43) Publication Date : 02/07/2021

(54) Title of the invention : A PROCESS FOR THE PREPARATION OF N-SUBSTITUTED PHENOTHIAZINE DERIVATIVES

(51) International classification	:H01M0010440000, G11B0017049000, G03G0015080000, A24D0003060000, B65D0006220000
(31) Priority Document No	:NA
(32) Priority Date	:NA
(33) Name of priority country	:NA
(86) International Application No	:NA
Filing Date	:NA
(87) International Publication No	: NA
(61) Patent of Addition to Application Number	:NA
Filing Date	:NA
(62) Divisional to Application Number	:NA
Filing Date	:NA

(71)**Name of Applicant :**
1)INDIAN INSTITUTE OF TECHNOLOGY GANDHINAGAR
Address of Applicant :INDIAN INSTITUTE OF TECHNOLOGY GANDHINAGAR, PALAJ, GANDHINAGAR-382355, GUJARAT, INDIA Gujarat India
(72)**Name of Inventor :**
1)KIRUBAKARAN SIVAPRIYA
2)THIRUVENKATAM VIJAY
3)HUSSAIN JAVEENA
4)ALTHAF SHAIK
5)SIDDHANT BHOIR

(57) Abstract :
ABSTRACT A PROCESS FOR THE PREPARATION OF N-SUBSTITUTED PHENOTHIAZINE DERIVATIVES The present disclosure relates to a process for the preparation of N-substituted phenothiazine derivatives.The N-substituted phenothiazine derivatives of the present disclosure are demonstrated to have kinase inhibition activity.

No. of Pages : 49 No. of Claims : 10

(12) PATENT APPLICATION PUBLICATION
(19) INDIA
(22) Date of filing of Application :31/12/2019

(21) Application No.201921054703 A
(43) Publication Date : 02/07/2021

(54) Title of the invention : SYSTEM AND METHOD OF DYNAMIC AND SCALABLE IOT FRAMEWORK

(51) International classification	:H04W0036220000, G06F0017220000, G06F0017210000, C07D0403120000, C07D0413040000	(71)**Name of Applicant :** **1)Reliance Jio Infocomm Limited** Address of Applicant :101, Saffron, Nr. Centre Point, Panchwati 5 Rasta, Ambawadi, Ahmedabad-380006, Gujarat, India Gujarat India
(31) Priority Document No	:NA	(72)**Name of Inventor :**
(32) Priority Date	:NA	**1)VISHAL RAJANI**
(33) Name of priority country	:NA	**2)WAI YIN YEE**
(86) International Application No	:NA	**3)MAHESH JENA**
Filing Date	:NA	**4)NITIN AGARWAL**
(87) International Publication No	: NA	**5)PRATEEK AGARWAL**
(61) Patent of Addition to Application Number	:NA	
Filing Date	:NA	
(62) Divisional to Application Number	:NA	
Filing Date	:NA	

(57) Abstract :
A method and a system for providing one or more services to one or more user devices [202] in an IoT network in a scalable M2M (Machine to Machine) framework. The method comprises receiving a connection request from the one or more user devices [202] at a load balance of the IoT network, the connection request comprises at least a username comprising a cluster identifier. The load balancer [204] determines a cluster identifier based on the connection request and identifies at least one target cluster from the one or more clusters [206], said target cluster being associated with the identifier cluster identifier. The load balancer [204] routes the connection request to the at least one target cluster to provide the one or more services to the one or more user devices [202].
FIGURE 2

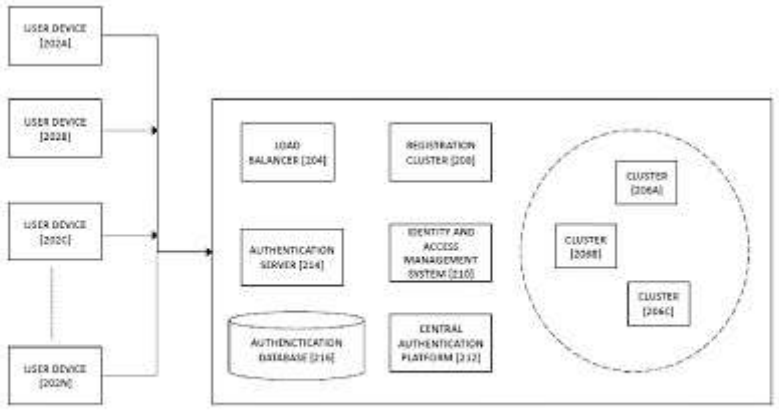

FIGURE 2

No. of Pages : 37 No. of Claims : 16

(12) PATENT APPLICATION PUBLICATION
(19) INDIA
(22) Date of filing of Application :31/12/2019

(21) Application No.201921054726 A
(43) Publication Date : 02/07/2021

(54) Title of the invention : A BIPOLAR PLATE ASSEMBLY FOR A FUEL CELL

(51) International classification	:H01M0008025800, H01M0008248300, H01M0008248400, H01M0008041190, H01M0008026700
(31) Priority Document No	:NA
(32) Priority Date	:NA
(33) Name of priority country	:NA
(86) International Application No	:NA
Filing Date	:NA
(87) International Publication No	: NA
(61) Patent of Addition to Application Number	:NA
Filing Date	:NA
(62) Divisional to Application Number	:NA
Filing Date	:NA

(71)**Name of Applicant :**
1)TATA MOTORS LIMITED
Address of Applicant :Bombay House, 24 Homi Mody Street, Mumbai 400 001 Maharashtra, India Maharashtra India
(72)**Name of Inventor :**
1)Yogesha S A
2)Suresh Arikapudi
3)Hemkant Dattatray Yeole
4)Srinivasa Kumar Reddy Bodireddy
5)Hemant Bhalchandra Kulkarni
6)N K Vaidya
7)Ranjit Uttreshwar Khot

(57) Abstract :
A bipolar plate assembly (100) for a fuel cell (101) is disclosed. The assembly (100) comprises a first plate (3) with a hydrogen inlet manifold (10) configured opposite to a hydrogen outlet manifold (11). A hydrogen distribution channel (20) is defined on a major surface of the first plate (3) between the hydrogen inlet and outlet manifolds (10 and 11). A second plate (4) comprising an air inlet manifold (14) opposite to an air outlet manifold (15) is provided. An air distribution channel (21) is defined on a major surface of the second plate (4) between the air inlet manifold (14) and the air outlet manifold (15). The hydrogen distribution channel (20) and the air distribution channel (21) are defined with lanceolate protrusions (E) in a plurality of arrays for creating turbulence during the flow of hydrogen and air, consequently humidifying the hydrogen and the air. Figs. 3 and 4 are the representative figures.

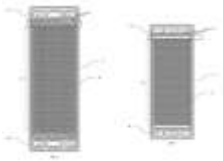

No. of Pages : 25 No. of Claims : 11

(12) PATENT APPLICATION PUBLICATION
(21) Application No.201921054734 A
(19) INDIA
(22) Date of filing of Application :31/12/2019
(43) Publication Date : 02/07/2021

(54) Title of the invention : A METHOD OF PAINITNG A CLAY MODEL OF A VEHICLE

(51) International classification	:B05D0007000000, B28B0007340000, A63H0017260000, B28B0007000000, B05D0007140000	(71)**Name of Applicant :** **1)TATA MOTORS LIMITED** Address of Applicant :Bombay House, 24 Homi Mody Street, Hutatma Chowk, Mumbai 400 001, Maharashtra, India Maharashtra India
(31) Priority Document No	:NA	(72)**Name of Inventor :**
(32) Priority Date	:NA	**1)Srinivasa Kumar Reddy Bodireddy**
(33) Name of priority country	:NA	**2)Ashutosh Suhas Gujar**
(86) International Application No	:NA	**3)Samadhan Raghunath Varule**
Filing Date	:NA	**4)Rajendra Mahadeo Lanjekar**
(87) International Publication No	: NA	**5)Amarjit Dasharath Gharge**
(61) Patent of Addition to Application Number	:NA	**6)Jamdade Kiran Nivrutti**
Filing Date	:NA	**7)Bidwe Sanjay Vinayak**
(62) Divisional to Application Number	:NA	
Filing Date	:NA	

(57) Abstract :
The present disclosure discloses a method of painting a clay model of a vehicle is disclosed. The method comprises of cleaning and degreasing an outer surface of the clay model. Further, the method includes applying a primer coat, which comprises a mixture of polyvinyl chloride stone chip protector and a binder on to the surface of the clay model, wherein the primer coat forms a barrier film on the surface. Furthermore, the method comprises of drying the primer coat for a first-time interval and, applying a paint coat on the barrier film, wherein the painted clay model resembles the appearance of a finished vehicle. Figure. 1 is a representative figure.

No. of Pages : 14 No. of Claims : 14

(12) PATENT APPLICATION PUBLICATION
(19) INDIA
(22) Date of filing of Application :31/12/2019

(21) Application No.201921054735 A
(43) Publication Date : 02/07/2021

(54) Title of the invention : WATER MANAGEMENT SYSTEM

(51) International classification	:G01N0033180000, E03B0007070000, G05D0007060000, C02F0001000000, F24D0003100000	(71)**Name of Applicant :** **1)Panasonic Life Solutions India Private Limited** Address of Applicant :3rd Floor, B wing I- Think Techno Campus Pokhran, Road No 2 Thane (West), Thane, Maharashtra 400607, India Maharashtra India
(31) Priority Document No	:NA	(72)**Name of Inventor :** **1)NAYAK, Sujit Kumar**
(32) Priority Date	:NA	
(33) Name of priority country	:NA	
(86) International Application No	:NA	
Filing Date	:NA	
(87) International Publication No	: NA	
(61) Patent of Addition to Application Number	:NA	
Filing Date	:NA	
(62) Divisional to Application Number	:NA	
Filing Date	:NA	

(57) Abstract :
A water management system (100) comprising a water purifier (110), a first tank (102) for storing water to be supplied to an outlet (106) in a terminal unit (104). The first tank (102) is connected to the terminal unit (104) via a pipeline network comprising at least a first pipeline route (108-1) and a second pipeline route (108-2), the second pipeline route (108-2) having the water purifier (110) disposed thereon and a valve control unit (112). The valve control unit (112) comprises a valve (114) disposed on the pipeline network and a valve controller (116). The water management system (100) further comprises a water sensor device (118) disposed within the first tank (102). The water sensor device (118) comprises a water quality sensor (120) configured to measure a quality of water in the first tank (102). Further, the valve controller (116) is configured to operate the valve (114) such that the water is supplied to the outlet (106) of the terminal unit (104) through the second pipeline route (108-2).

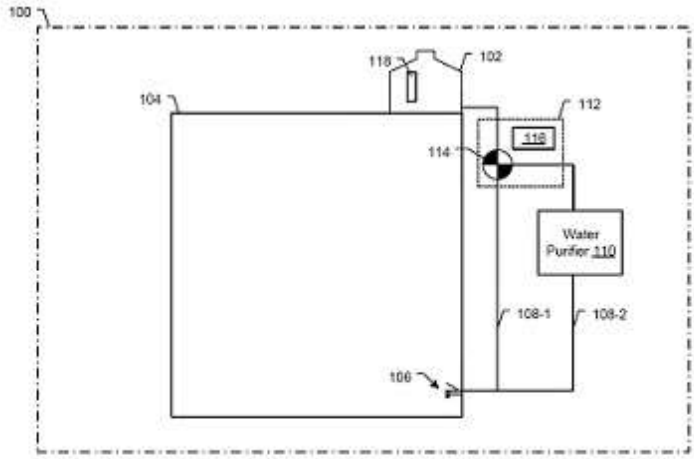

Fig. 1(a)

No. of Pages : 20 No. of Claims : 11

(12) PATENT APPLICATION PUBLICATION
(19) INDIA
(22) Date of filing of Application :31/12/2019

(21) Application No.201921054743 A
(43) Publication Date : 02/07/2021

(54) Title of the invention : A METHOD AND SYSTEM FOR DETECTING AND RECORDING SEQUENCE OF EVENTS FOR PROCESS MONITORING

(51) International classification	:A61B0005000000, G06F0011300000, G10H0001000000, H03M0009000000, G06F0011160000	(71)**Name of Applicant :** **1)Mohan Govind Phadnis** Address of Applicant :31, Yojak, Artek Apartments, Madhusudan Kalelkar Marg, Kalanagar, Bandra East, Mumbai 400051, Maharashtra, India. Maharashtra India
(31) Priority Document No	:NA	(72)**Name of Inventor :**
(32) Priority Date	:NA	**1)Mohan Govind Phadnis**
(33) Name of priority country	:NA	
(86) International Application No	:NA	
Filing Date	:NA	
(87) International Publication No	: NA	
(61) Patent of Addition to Application Number	:NA	
Filing Date	:NA	
(62) Divisional to Application Number	:NA	
Filing Date	:NA	

(57) Abstract :
The present invention relates to process monitoring, more particularly the invention relates to an autonomous system and method thereof for detecting and recording sequence of events for process monitoring that replaces elaborate software code employed in the prior art to detect occurrence of an event within the sampling interval of Sequence of Event Recorder (SER) / Event. The system and method thereof of present invention uses a simple Exclusive OR gate to compare the two data sets, bit by bit. The previous interval data held in a FIFO register is serialized and is compared with the current data serialized by shifting out the data on the output of a parallel to serial converter register, forming a part of the front-end hardware. Ref. Fig.: Fig. 1

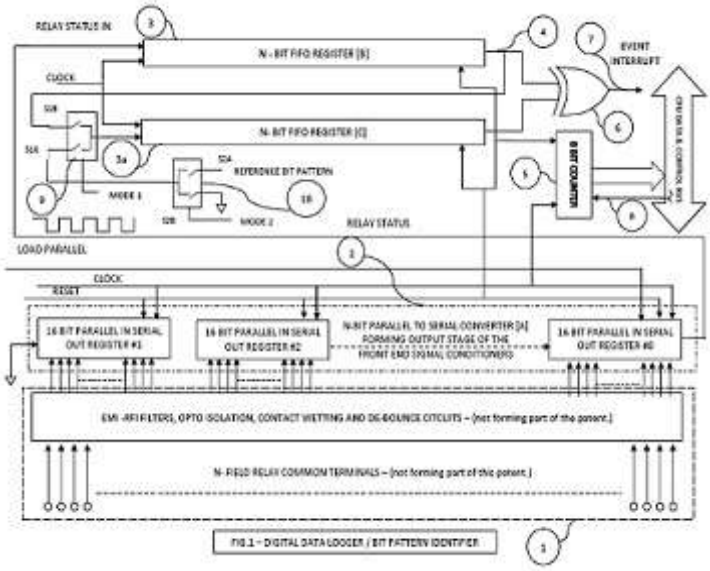

No. of Pages : 37 No. of Claims : 32

(12) PATENT APPLICATION PUBLICATION
(21) Application No.201921054785 A
(19) INDIA
(22) Date of filing of Application :31/12/2019
(43) Publication Date : 02/07/2021

(54) Title of the invention : WOVEN BAG WITH INTURNED WELTS

(51) International classification	:B60R0021235000, B31B0070980000, D06H0001000000, B29C0070540000, B26F0001380000	(71)**Name of Applicant :** **1)IMTIAZ N MALKANI** Address of Applicant :D-24, ACME ESTATE, SEWRI (EAST), MUMBAI Maharashtra India
(31) Priority Document No	:NA	(72)**Name of Inventor :** **1)CHANDRASHEKHAR NARAYAN VARTAK**
(32) Priority Date	:NA	**2)IMTIAZ N MALKANI**
(33) Name of priority country	:NA	
(86) International Application No	:NA	
Filing Date	:NA	
(87) International Publication No	: NA	
(61) Patent of Addition to Application Number	:NA	
Filing Date	:NA	
(62) Divisional to Application Number	:NA	
Filing Date	:NA	

(57) Abstract :
ABSTRACT The field of invention is in the TEXTILES. In the manufacture of standard cotton bags used for household marketing these need to be fabricated by buying the fabric, sewing threads etc. plus checking the raw material, laying the fabric layers on table, cutting the same using the marker and making bundles ready for stitching. This needs lot of space, utilities, labour etc; and is laborious and expensive process. As large number of labours are involved, it leads to exposure of large number of personal errors and quality problems. By producing the woven bags with in turned welts (folded edges at the top of the bag), and both the sides of the bags and the bottom being sewn on the loom itself, above referred process is practically eliminated..Also number of bags could be produced simultaneously with different warps and wefts, leading to production of different varieties at one go. Also this will be very economical way of production.

No. of Pages : 9 No. of Claims : 1

(12) PATENT APPLICATION PUBLICATION
(19) INDIA
(22) Date of filing of Application :31/12/2019

(21) Application No.201921054799 A
(43) Publication Date : 02/07/2021

(54) Title of the invention : WATER MANAGEMENT SYSTEM BASED ON IOT •

(51) International classification	:G08G0001096700, B62J0099000000, F04D0013060000, E03F0005100000, F04B0049060000	(71)**Name of Applicant :** **1)MESBRO TECHNOLOGIES PRIVATE LIMITED** Address of Applicant :Flat no C/904, Geomatrix Dev, Plot no 29, Sector 25, Kamothe, Raigarh-410209, Maharashtra, India Maharashtra India
(31) Priority Document No	:NA	(72)**Name of Inventor :**
(32) Priority Date	:NA	**1)Mr. Bhaskar Vijay Ajgaonkar**
(33) Name of priority country	:NA	
(86) International Application No	:NA	
Filing Date	:NA	
(87) International Publication No	: NA	
(61) Patent of Addition to Application Number	:NA	
Filing Date	:NA	
(62) Divisional to Application Number	:NA	
Filing Date	:NA	

(57) Abstract :
Accordingly, a water management system using IOT is disclosed. Water management system using IOT comprising of;User registration interface (database of the website); Laser sensor used is for precise water level indication.;Water level indication through website; Sending the sensor values to water pump via the transmitter to turn on/off the pump as well as to the microcontroller; updation of the information in the cloud (database of the website);value received from the sensors about water level to receiver, the motor automatically turn on/off to pump the water to the tank

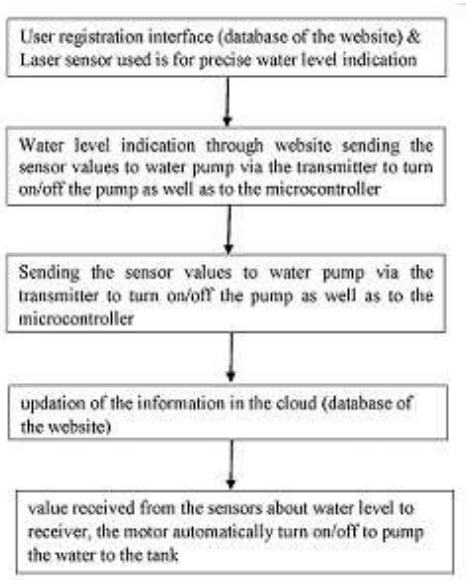

FIG 1

No. of Pages : 12 No. of Claims : 5

(12) PATENT APPLICATION PUBLICATION
(21) Application No.201921054800 A
(19) INDIA
(22) Date of filing of Application :31/12/2019
(43) Publication Date : 02/07/2021

(54) Title of the invention : CLAIMS PREVENTION AND MANAGEMENT SYSTEM IN INSURANCE USING BLOCKCHAIN TECHNOLOGY •

(51) International classification	:G06Q0040080000, H04L0009320000, G06Q0020380000, G06F0021600000, H04L0009060000	(71)**Name of Applicant :** **1)MESBRO TECHNOLOGIES PRIVATE LIMITED** Address of Applicant :Flat no C/904, Geomatrix Dev, Plot no 29, Sector 25, Kamothe, Raigarh-410209, Maharashtra, India Maharashtra India
(31) Priority Document No	:NA	(72)**Name of Inventor :**
(32) Priority Date	:NA	**1)Mr. Bhaskar Vijay Ajgaonkar**
(33) Name of priority country	:NA	
(86) International Application No	:NA	
Filing Date	:NA	
(87) International Publication No	: NA	
(61) Patent of Addition to Application Number	:NA	
Filing Date	:NA	
(62) Divisional to Application Number	:NA	
Filing Date	:NA	

(57) Abstract :
The present invention discloses a method, system or computer program for claims prevention and management system in insurance by using blockchain technology. User has to create profile with all needed documents before registering the insurance policy on any electronic device which has active internet connection. By receiving this request, backend blockchain server get activated. It processes all documents which are provided by user for verification. After verification of documents, it will execute smart contract for insurance policy. Any premium deposit and insurance claim are saved in database. The present invention saves data to blockchain server in cryptographically format, with creating new block of information for this newly added data. This block of data attached to blockchain. Publication of this block of information is done.

No. of Pages : 9 No. of Claims : 4

(12) PATENT APPLICATION PUBLICATION
(19) INDIA
(22) Date of filing of Application :31/12/2019

(21) Application No.201921054801 A
(43) Publication Date : 02/07/2021

(54) Title of the invention : GARDEN MONITORING SYSTEM USING INTERNET OF THINGS (IOT) •

(51) International classification	:A01G0009020000, H04N0021414300, G06Q0030020000, G05D0027020000, G08B0025140000	(71)**Name of Applicant :** **1)MESBRO TECHNOLOGIES PRIVATE LIMITED** Address of Applicant :Flat no C/904, Geomatrix Dev, Plot no 29, Sector 25, Kamothe, Raigarh-410209, Maharashtra, India Maharashtra India
(31) Priority Document No	:NA	(72)**Name of Inventor :** **1)Mr. Bhaskar Vijay Ajgaonkar**
(32) Priority Date	:NA	
(33) Name of priority country	:NA	
(86) International Application No	:NA	
Filing Date	:NA	
(87) International Publication No	: NA	
(61) Patent of Addition to Application Number	:NA	
Filing Date	:NA	
(62) Divisional to Application Number	:NA	
Filing Date	:NA	

(57) Abstract :
Accordingly, a system for garden monitoring and maintaining the garden is disclosed. A garden monitoring system using internet of things (IOT) comprising of; Database of the website for user registration; A LAN OR WAN network such as internet; Sensors used for controlling temperature, humidity, moisture, light intensity; Monitoring system attached to the computer ;Wherein all the sensors (sensor 1, sensor 2. Sensor 3, sensor 4) are attached to the computer and user can watch all the data related to the garden on his mobile screen through controlling the monitoring system attached with the computer.

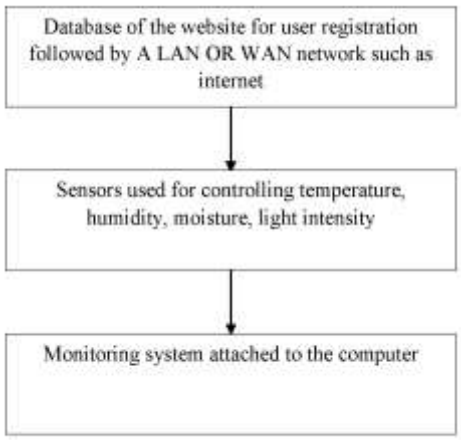

FIG 1

No. of Pages : 12 No. of Claims : 7

(12) PATENT APPLICATION PUBLICATION
(19) INDIA
(22) Date of filing of Application :31/12/2019

(21) Application No.201921054802 A
(43) Publication Date : 02/07/2021

(54) Title of the invention : WASTE MANAGEMENT SYSTEM USING INTERNET OF THINGS (IOT) •

(51) International classification	:G06Q0030020000, H04N0021414300, H04N0007180000, H04L0029080000, E21B0047060000	(71)**Name of Applicant :** **1)MESBRO TECHNOLOGIES PRIVATE LIMITED** Address of Applicant :Flat no C/904, Geomatrix Dev, Plot no 29, Sector 25, Kamothe, Raigarh-410209, Maharashtra, India Maharashtra India
(31) Priority Document No	:NA	(72)**Name of Inventor :**
(32) Priority Date	:NA	**1)Mr. Bhaskar Vijay Ajgaonkar**
(33) Name of priority country	:NA	
(86) International Application No	:NA	
Filing Date	:NA	
(87) International Publication No	: NA	
(61) Patent of Addition to Application Number	:NA	
Filing Date	:NA	
(62) Divisional to Application Number	:NA	
Filing Date	:NA	

(57) Abstract :
Accordingly, a garbage monitoring system is disclosed. A garbage monitoring system comprising of; A garbage monitoring system using internet of things (IOT) comprising of; Database of the website for user registration; A LAN OR WAN network such as internet; Sensors used for controlling temperature, light intensity, moisture, location, temperature, and theft; Monitoring system attached to the computer ;and DC motor powered platform; Wherein all the sensors are attached to the computer and user can watch all the data related to the garbage management on his mobile screen through controlling the monitoring system attached with the computer.

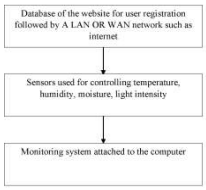

FIG 1

No. of Pages : 12 No. of Claims : 8

(12) PATENT APPLICATION PUBLICATION
(19) INDIA
(22) Date of filing of Application :31/12/2019

(21) Application No.201921054803 A
(43) Publication Date : 02/07/2021

(54) Title of the invention : ORDER PICKING SYSTEM FOR WAREHOUSE USING AUGMENTED REALITY TECHNOLOGY •

(51) International classification	:G06Q0030060000, B65G0001137000, G06Q0010080000, G06T0019000000, G06K0007140000	(71)**Name of Applicant :** **1)MESBRO TECHNOLOGIES PRIVATE LIMITED** Address of Applicant :Flat no C/904, Geomatrix Dev, Plot no 29, Sector 25, Kamothe, Raigarh-410209, Maharashtra, India Maharashtra India
(31) Priority Document No	:NA	(72)**Name of Inventor :**
(32) Priority Date	:NA	**1)Mr. Bhaskar Vijay Ajgaonkar**
(33) Name of priority country	:NA	
(86) International Application No	:NA	
Filing Date	:NA	
(87) International Publication No	: NA	
(61) Patent of Addition to Application Number	:NA	
Filing Date	:NA	
(62) Divisional to Application Number	:NA	
Filing Date	:NA	

(57) Abstract :
The present invention discloses the order picking system for warehouse using augmented reality technology. Application is installed on backend server. Any Augmented reality enabled electronic device is connected to sever. User wear that device. Choose the order list for picking. As soon as order get selected, the location of each and every item shown on the screen. So, user go directly to item location. Scan the item and placed that item on cart. Same process has to follow for all the items in the list.

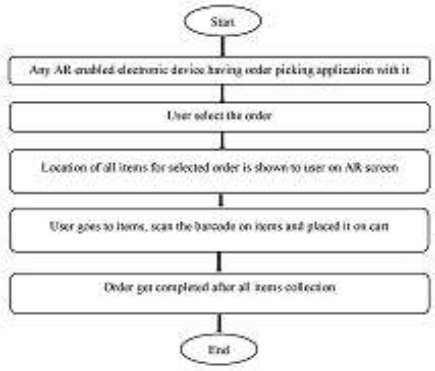

Fig. 1

No. of Pages : 8 No. of Claims : 3

(12) PATENT APPLICATION PUBLICATION
(19) INDIA
(22) Date of filing of Application :31/12/2019

(21) Application No.201921054804 A
(43) Publication Date : 02/07/2021

(54) Title of the invention : PET FINDER SYSTEM USING INTERNET OF THINGS (IOT) •

(51) International classification	:H04L0029080000, A01K0027000000, H04W0004700000, G06N0007000000, G06N0003000000	(71)**Name of Applicant :** **1)MESBRO TECHNOLOGIES PRIVATE LIMITED** Address of Applicant :Flat no C/904, Geomatrix Dev, Plot no 29, Sector 25, Kamothe, Raigarh-410209, Maharashtra, India Maharashtra India
(31) Priority Document No	:NA	(72)**Name of Inventor :**
(32) Priority Date	:NA	**1)Mr. Bhaskar Vijay Ajgaonkar**
(33) Name of priority country	:NA	
(86) International Application No	:NA	
Filing Date	:NA	
(87) International Publication No	: NA	
(61) Patent of Addition to Application Number	:NA	
Filing Date	:NA	
(62) Divisional to Application Number	:NA	
Filing Date	:NA	

(57) Abstract :
The present invention discloses the pet finder system using Internet of Things (IoT). All sensors, GPS enabled device and any electronic computing device are installed. The artificial intelligence program should be saved on electronic device. The reading of all sensors is sent to user™s device using Internet of Things (IoT). Location of pet can be traced using GPS with combination of Internet of Things (IoT).

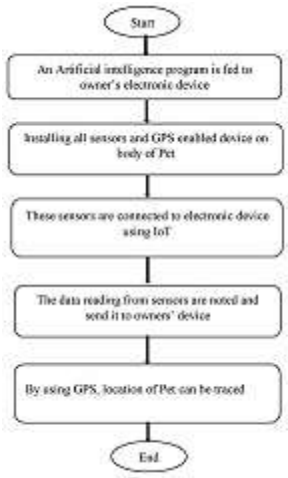

Fig. 1

No. of Pages : 8 No. of Claims : 3

(12) PATENT APPLICATION PUBLICATION
(19) INDIA
(22) Date of filing of Application :31/12/2019

(21) Application No.201921054805 A
(43) Publication Date : 02/07/2021

(54) Title of the invention : STOCK TAKING SYSTEM FOR WAREHOUSE USING AUGMENTED REALITY TECHNOLOGY

(51) International classification	:G06T0019000000, G06Q0010080000, G06K0019060000, G06F0016000000, G06Q0030020000	(71)**Name of Applicant :** **1)MESBRO TECHNOLOGIES PRIVATE LIMITED** Address of Applicant :Flat no C/904, Geomatrix Dev, Plot no 29, Sector 25, Kamothe, Raigarh-410209, Maharashtra, India Maharashtra India
(31) Priority Document No	:NA	(72)**Name of Inventor :**
(32) Priority Date	:NA	**1)Mr. Bhaskar Vijay Ajgaonkar**
(33) Name of priority country	:NA	
(86) International Application No	:NA	
Filing Date	:NA	
(87) International Publication No	: NA	
(61) Patent of Addition to Application Number	:NA	
Filing Date	:NA	
(62) Divisional to Application Number	:NA	
Filing Date	:NA	

(57) Abstract :
The present invention discloses the stock taking system for warehouse using augmented reality technology. Application is installed on backend server. Any Augmented reality enabled electronic device is connected to sever. User wear AR enabled device. Start stock take application. As soon as application started, the barcodes of all items are scanned where device aimed. All information of scanned items is stored in stock take database. Reports of stock take is generated at the end.

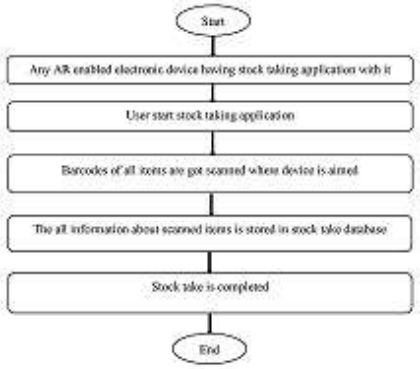

Fig. 1

No. of Pages : 8 No. of Claims : 5

(12) PATENT APPLICATION PUBLICATION
(19) INDIA
(22) Date of filing of Application :31/12/2019

(21) Application No.201921054806 A
(43) Publication Date : 02/07/2021

(54) Title of the invention : REMOTE MONITORING POULTRY FARM SYSTEM USING INTERNET OF THINGS (IOT) •

(51) International classification	:A01K0045000000, A01K0039020000, H04L0029080000, A01K0029000000, G06Q0050020000	(71)**Name of Applicant :** **1)MESBRO TECHNOLOGIES PRIVATE LIMITED** Address of Applicant :Flat no C/904, Geomatrix Dev, Plot no 29, Sector 25, Kamothe, Raigarh-410209, Maharashtra, India Maharashtra India
(31) Priority Document No	:NA	(72)**Name of Inventor :** **1)Mr. Bhaskar Vijay Ajgaonkar**
(32) Priority Date	:NA	
(33) Name of priority country	:NA	
(86) International Application No	:NA	
Filing Date	:NA	
(87) International Publication No	: NA	
(61) Patent of Addition to Application Number	:NA	
Filing Date	:NA	
(62) Divisional to Application Number	:NA	
Filing Date	:NA	

(57) Abstract :
Accordingly, a remote monitoring system for poultry farming using internet of things (IOT) is disclosed. A remote monitoring system for poultry farming using internet of things comprising of; Gathering data of various poultries connected to the central database of the website; analyzing health data of the chicks using data analyzer unit; Filtering the data based on sickness of the chicks; Maintaining the temperature with the help of water sprinkler; Reducing unwanted gases from poultry and controlling intensity of light with the help of cooling fan, ventilation window and light ON/OFF with the help of sensors; and Intimating the person in charge of the poultry farm about sickness of the cattles as well as environmental conditions of the poultry farm.

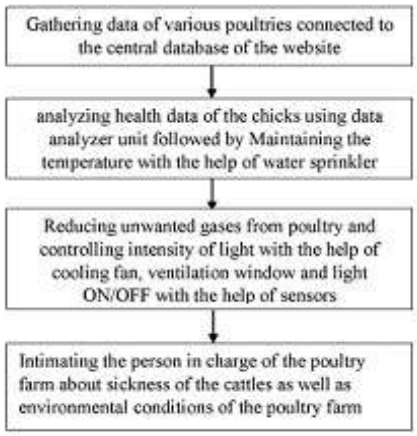

FIG 1

No. of Pages : 12 No. of Claims : 6

(12) PATENT APPLICATION PUBLICATION
(19) INDIA
(22) Date of filing of Application :31/12/2019

(21) Application No.201921054807 A
(43) Publication Date : 02/07/2021

(54) Title of the invention : CHILD SAFETY MONITORING SYSTEM BASED ON IOT •

(51) International classification	:G08B0021020000, H04L0029080000, A42B0003040000, H04N0007180000, G08B0021080000	(71)**Name of Applicant :** **1)MESBRO TECHNOLOGIES PRIVATE LIMITED** Address of Applicant :Flat no C/904, Geomatrix Dev, Plot no 29, Sector 25, Kamothe, Raigarh-410209, Maharashtra, India Maharashtra India
(31) Priority Document No	:NA	(72)**Name of Inventor :**
(32) Priority Date	:NA	**1)Mr. Bhaskar Vijay Ajgaonkar**
(33) Name of priority country	:NA	
(86) International Application No	:NA	
Filing Date	:NA	
(87) International Publication No	: NA	
(61) Patent of Addition to Application Number	:NA	
Filing Date	:NA	
(62) Divisional to Application Number	:NA	
Filing Date	:NA	

(57) Abstract :
Accordingly, a system for monitoring /tracking the pick up/drop off of school children for enhancing the security of the children. A system for monitoring /tracking the pick up/drop off of school children for enhancing the security of the children /women comprising of; Various sensors for sensing the status of the person (child/woman) like Temperature sensor, Pulse sensor, GPS, Web camera and microprocessor; A monitoring system for Both web application as well as mobile application or either one of it can be used as the front end user interface, cloud, and database as the back end for storing and retrieving information, and a system for monitoring; User registration website; Data analyzer for analyzing data.

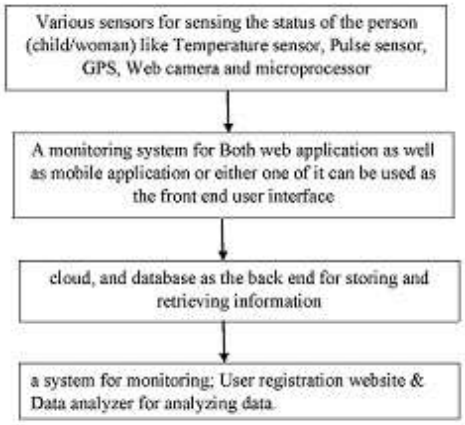

Fig 1

No. of Pages : 12 No. of Claims : 8

(12) PATENT APPLICATION PUBLICATION
(19) INDIA
(22) Date of filing of Application :31/12/2019

(21) Application No.201921054808 A
(43) Publication Date : 02/07/2021

(54) Title of the invention : A SMART RETAILING SYSTEM USING INTERNET OF THINGS (IOT) •

(51) International classification	:G06Q0030020000, H04L0029080000, G06Q0010040000, G06Q0030060000, G06N0020000000	(71)**Name of Applicant :** **1)MESBRO TECHNOLOGIES PRIVATE LIMITED** Address of Applicant :Flat no C/904, Geomatrix Dev, Plot no 29, Sector 25, Kamothe, Raigarh-410209, Maharashtra, India Maharashtra India
(31) Priority Document No	:NA	(72)**Name of Inventor :**
(32) Priority Date	:NA	**1)Mr. Bhaskar Vijay Ajgaonkar**
(33) Name of priority country	:NA	
(86) International Application No	:NA	
Filing Date	:NA	
(87) International Publication No	: NA	
(61) Patent of Addition to Application Number	:NA	
Filing Date	:NA	
(62) Divisional to Application Number	:NA	
Filing Date	:NA	

(57) Abstract :
Accordingly, a smart retailing system using IOT (Internet of things) to connect easily with the customers. A smart retailing system using IOT (Internet of things) helping to transform an occasional client into member comprising of: Analyzing the needs and purchasing patterns of each customer in order to devise attractive offers and ensure constant sales; offering subscription services through the internet in which delivery of the product is accrued out at preferred consumer™s location; keeping record of the consumer goods; and providing alerts when a predetermined threshold is reached with respect to items under the subscription service and include providing a prediction pattern of demand management or time sensitive advertising

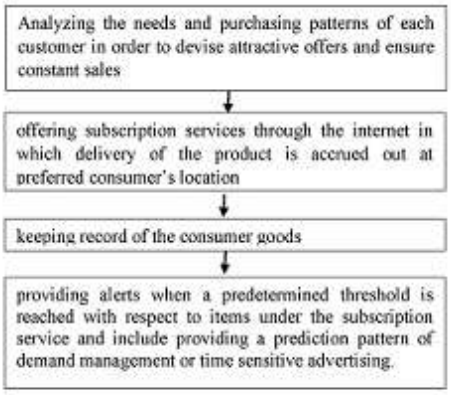

FIG 1

No. of Pages : 12 No. of Claims : 6

(12) PATENT APPLICATION PUBLICATION
(19) INDIA
(22) Date of filing of Application :31/12/2019
(21) Application No.201921054809 A
(43) Publication Date : 02/07/2021

(54) Title of the invention : AN IOT BASED AMBULANCE TRACKING WITH PATIENT HEALTHMONITORING SYSTEM USING GPS •

(51) International classification	:A61B0005000000, A61B0005021000, A61B0005020500, A61B0005010000, A61B0005040800	(71)**Name of Applicant :** **1)MESBRO TECHNOLOGIES PRIVATE LIMITED** Address of Applicant :Flat no C/904, Geomatrix Dev, Plot no 29, Sector 25, Kamothe, Raigarh-410209, Maharashtra, India Maharashtra India
(31) Priority Document No	:NA	(72)**Name of Inventor :**
(32) Priority Date	:NA	**1)Mr. Bhaskar Vijay Ajgaonkar**
(33) Name of priority country	:NA	
(86) International Application No	:NA	
Filing Date	:NA	
(87) International Publication No	: NA	
(61) Patent of Addition to Application Number	:NA	
Filing Date	:NA	
(62) Divisional to Application Number	:NA	
Filing Date	:NA	

(57) Abstract :
Accordingly, an IOT based ambulance tracking with patient health monitoring low cost system is disclosed. An IOT based ambulance tracking with patient health monitoring system comprising of; Ambulance unit; monitoring unit; vehicle unit; and signal unit ; measuring some biological parameter of the patient™s body like Temperature, Heartbeat, Blood pressure, by using sensors; the sensors sense the body temperature, heartbeat and blood pressure of the patient and sends the values to IOT Cloud platform through WIFI-Module; and Enabling the doctors to monitor patient™s health on his Smart phone.

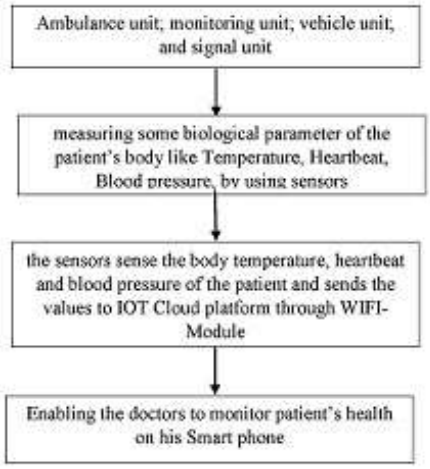

FIG 1

No. of Pages : 12 No. of Claims : 6

(12) PATENT APPLICATION PUBLICATION
(19) INDIA
(22) Date of filing of Application :31/12/2019

(21) Application No.201921054815 A
(43) Publication Date : 02/07/2021

(54) Title of the invention : TEAM COLLABORATION SYSTEM IN CONSTRUCTION USING AUGMENTED REALITY TECHNOLOGY •

(51) International classification	:G06Q0010100000, G06Q0010060000, G06T0019000000, H04N0019610000, H04N0019895000	(71)**Name of Applicant :** **1)MESBRO TECHNOLOGIES PRIVATE LIMITED** Address of Applicant :Flat no C/904, Geomatrix Dev, Plot no 29, Sector 25, Kamothe, Raigarh-410209, Maharashtra, India Maharashtra India
(31) Priority Document No	:NA	(72)**Name of Inventor :**
(32) Priority Date	:NA	**1)Mr. Bhaskar Vijay Ajgaonkar**
(33) Name of priority country	:NA	
(86) International Application No	:NA	
Filing Date	:NA	
(87) International Publication No	: NA	
(61) Patent of Addition to Application Number	:NA	
Filing Date	:NA	
(62) Divisional to Application Number	:NA	
Filing Date	:NA	

(57) Abstract :
The present invention discloses the system of team collaboration in construction using augmented reality technology. The all data related to project is inputted to database. Also, the data about of all team involved in construction is inputted to database. The user opens the application of team collaboration system via smart phone or tab or in case of AR smart glass, user just wear smart glass. Focused the AR device on particular built up area. Sensor senses all the parameters of built up area. If any error found, it takes notes and view video of error. And send error data to related team.

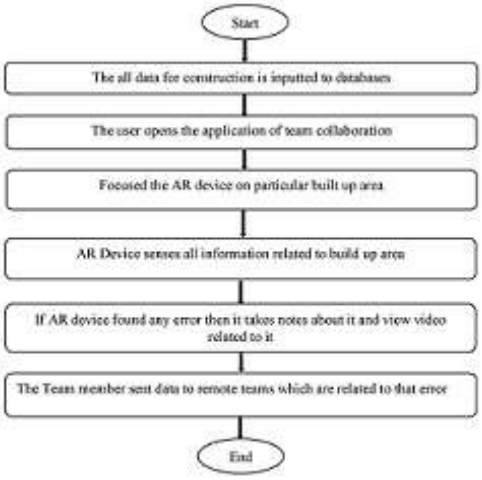

Fig. 1

No. of Pages : 8 No. of Claims : 5

(12) PATENT APPLICATION PUBLICATION
(19) INDIA
(22) Date of filing of Application :31/12/2019

(21) Application No.201921054816 A
(43) Publication Date : 02/07/2021

(54) Title of the invention : LANGUAGE TRANSLATION SYSTEM USING AUGMENTED REALITY TECHNOLOGY •

(51) International classification	:G06F0017280000, G06K0009000000, G06T0011600000, G06T0019000000, A63F0013214500	(71)**Name of Applicant :** **1)MESBRO TECHNOLOGIES PRIVATE LIMITED** Address of Applicant :Flat no C/904, Geomatrix Dev, Plot no 29, Sector 25, Kamothe, Raigarh-410209, Maharashtra, India Maharashtra India
(31) Priority Document No	:NA	(72)**Name of Inventor :** **1)Mr. Bhaskar Vijay Ajgaonkar**
(32) Priority Date	:NA	
(33) Name of priority country	:NA	
(86) International Application No	:NA	
Filing Date	:NA	
(87) International Publication No	: NA	
(61) Patent of Addition to Application Number	:NA	
Filing Date	:NA	
(62) Divisional to Application Number	:NA	
Filing Date	:NA	

(57) Abstract :
The present invention discloses the language translation system using augmented reality technology. Application is installed on high definition smart phone. The application opened and user capture the image of text which would be translated. ˜Translate™ button pressed by user. At backend the translation of text done and sent to the screen of smart phone.

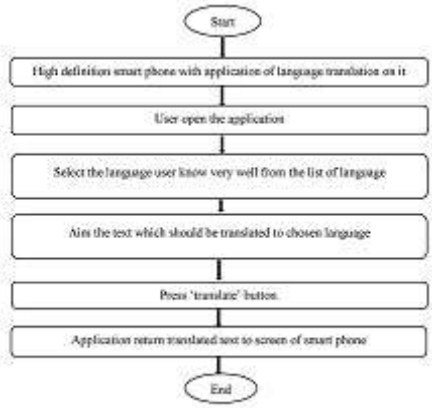

FIG 1

No. of Pages : 8 No. of Claims : 2

(12) PATENT APPLICATION PUBLICATION
(19) INDIA
(22) Date of filing of Application :31/12/2019

(21) Application No.201921054817 A
(43) Publication Date : 02/07/2021

(54) Title of the invention : AUTOMATED MEASUREMENT IN CONSTRUCTION USING AUGMENTED REALITY TECHNOLOGY •

(51) International classification	:G06Q0010060000, G06T0007000000, G06F0021320000, G06T0019000000, G06Q0030060000	(71)**Name of Applicant :** **1)MESBRO TECHNOLOGIES PRIVATE LIMITED** Address of Applicant :Flat no C/904, Geomatrix Dev, Plot no 29, Sector 25, Kamothe, Raigarh-410209, Maharashtra, India Maharashtra India
(31) Priority Document No	:NA	(72)**Name of Inventor :**
(32) Priority Date	:NA	**1)Mr. Bhaskar Vijay Ajgaonkar**
(33) Name of priority country	:NA	
(86) International Application No	:NA	
Filing Date	:NA	
(87) International Publication No	: NA	
(61) Patent of Addition to Application Number	:NA	
Filing Date	:NA	
(62) Divisional to Application Number	:NA	
Filing Date	:NA	

(57) Abstract :
The present invention discloses the system of automated measurement construction using augmented reality technology. The all data related to various measurement is inputted to database. The user opens the application of project planning via smart phone or tab or in case of AR smart glass, user just wear smart glass. Focused the AR device on particular built up area. Sensor senses measurement of built up area. It Compares the sensed measurement with model measurement. And if there is any mistake then alert would send to inspection in charge.

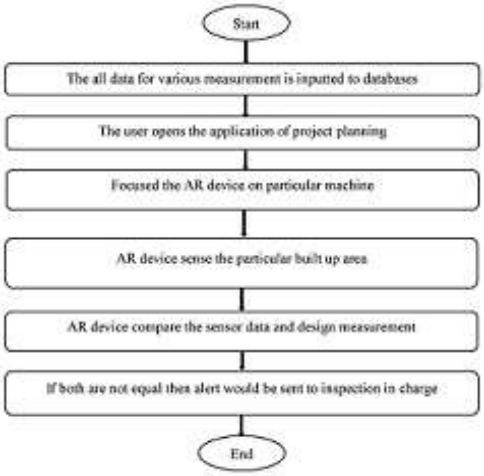

Fig. 1

No. of Pages : 8 No. of Claims : 3

(12) PATENT APPLICATION PUBLICATION
(19) INDIA
(22) Date of filing of Application :31/12/2019

(21) Application No.201921054818 A
(43) Publication Date : 02/07/2021

(54) Title of the invention : FRAUD DETECTION SYSTEM IN INSURANCE USING BLOCKCHAIN TECHNOLOGY •

(51) International classification	:G06Q0040080000, H04L0009320000, G06Q0020380000, G06F0021600000, H04L0009060000	(71)**Name of Applicant :** **1)MESBRO TECHNOLOGIES PRIVATE LIMITED** Address of Applicant :Flat no C/904, Geomatrix Dev, Plot no 29, Sector 25, Kamothe, Raigarh-410209, Maharashtra, India Maharashtra India
(31) Priority Document No	:NA	(72)**Name of Inventor :**
(32) Priority Date	:NA	**1)Mr. Bhaskar Vijay Ajgaonkar**
(33) Name of priority country	:NA	
(86) International Application No	:NA	
Filing Date	:NA	
(87) International Publication No	: NA	
(61) Patent of Addition to Application Number	:NA	
Filing Date	:NA	
(62) Divisional to Application Number	:NA	
Filing Date	:NA	

(57) Abstract :
The present invention discloses a method, system or computer program for fraud detection system in insurance by using blockchain technology. User has to create profile with all needed documents before registering the insurance policy on any electronic device which has active internet connection. By receiving this request, backend blockchain server get activated. It processes all documents which are provided by user for verification. After verification of documents, it will execute smart contract for insurance policy. Any premium deposit and insurance claim are saved in database. The present invention save data to blockchain server in cryptographically format. With creating new block of information for this newly added data. This block of data attached to blockchain. Publication of this block of information is done.

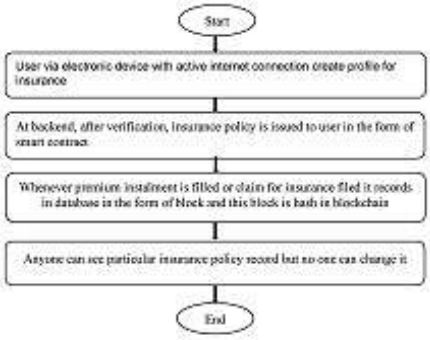

Fig. 1

No. of Pages : 8 No. of Claims : 4

(12) PATENT APPLICATION PUBLICATION
(19) INDIA
(22) Date of filing of Application :31/12/2019

(21) Application No.201921054819 A
(43) Publication Date : 02/07/2021

(54) Title of the invention : SAFETY TRAINING IN CONSTRUCTION USING AUGMENTED TECHNOLOGY •

(51) International classification	:G06Q0010060000, G06Q0030060000, G06K0009000000, G06T0019000000, G06F0016000000	(71)**Name of Applicant :** **1)MESBRO TECHNOLOGIES PRIVATE LIMITED** Address of Applicant :Flat no C/904, Geomatrix Dev, Plot no 29, Sector 25, Kamothe, Raigarh-410209, Maharashtra, India Maharashtra India
(31) Priority Document No	:NA	(72)**Name of Inventor :**
(32) Priority Date	:NA	**1)Mr. Bhaskar Vijay Ajgaonkar**
(33) Name of priority country	:NA	
(86) International Application No	:NA	
Filing Date	:NA	
(87) International Publication No	: NA	
(61) Patent of Addition to Application Number	:NA	
Filing Date	:NA	
(62) Divisional to Application Number	:NA	
Filing Date	:NA	

(57) Abstract :
The present invention discloses the system of safety training in construction using augmented reality technology. The all data is inputted to database. The user opens the application of project planning via smart phone or tab or in case of AR smart glass, user just wear smart glass. Focused the AR device on particular machine. Sensor sense machine and send data to application. An application search sensor data into databases. The resulted information and video about sensed machine are sent back to AR device. User can see all related information and video related to particular machine.

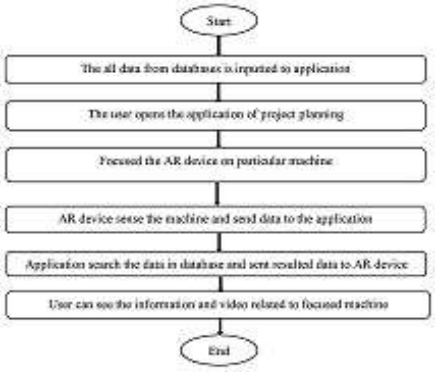

Fig. 1

No. of Pages : 8 No. of Claims : 3

(12) PATENT APPLICATION PUBLICATION
(19) INDIA
(22) Date of filing of Application :31/12/2019

(21) Application No.201921054820 A
(43) Publication Date : 02/07/2021

(54) Title of the invention : RETAIL SHOPPING SYSTEM USING AUGMENTED REALITY TECHNOLOGY •

(51) International classification	:G06Q0030060000, G06T0019000000, G06F0003048100, H04N0007180000, G06F0003048200	(71)**Name of Applicant :** **1)MESBRO TECHNOLOGIES PRIVATE LIMITED** Address of Applicant :Flat no C/904, Geomatrix Dev, Plot no 29, Sector 25, Kamothe, Raigarh-410209, Maharashtra, India Maharashtra India
(31) Priority Document No	:NA	(72)**Name of Inventor :**
(32) Priority Date	:NA	**1)Mr. Bhaskar Vijay Ajgaonkar**
(33) Name of priority country	:NA	
(86) International Application No	:NA	
Filing Date	:NA	
(87) International Publication No	: NA	
(61) Patent of Addition to Application Number	:NA	
Filing Date	:NA	
(62) Divisional to Application Number	:NA	
Filing Date	:NA	

(57) Abstract :
The present invention discloses the system of retail shopping using augmented reality technology. The web application of retail has been created. The user with high definition smart phone opens the application. Search for particular product. And check suitability of product into home/office using augmented reality technology. The three-dimensional view of product is sent to the user™s graphical view of place where camera of smart phone is focused.

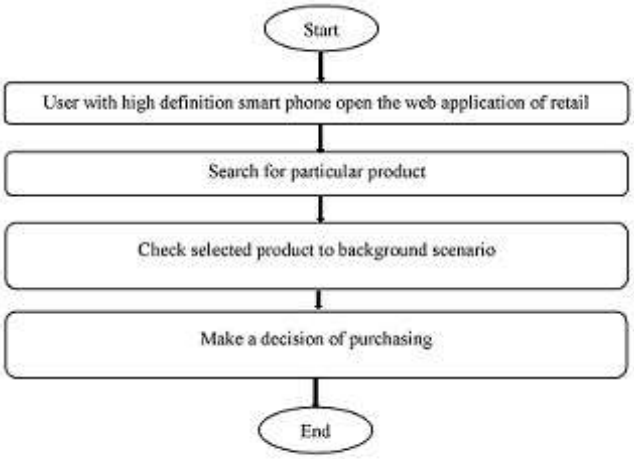

FIG 1

No. of Pages : 8 No. of Claims : 3

(12) PATENT APPLICATION PUBLICATION
(19) INDIA
(22) Date of filing of Application :31/12/2019

(21) Application No.201921054821 A
(43) Publication Date : 02/07/2021

(54) Title of the invention : PROJECT MODIFICATION IN CONSTRUCTION USING AUGMENTED TECHNOLOGY •

(51) International classification	:G06Q0010060000, G06T0019000000, H04N0007180000, G06F0008710000, G06T0019200000	(71)**Name of Applicant :** **1)MESBRO TECHNOLOGIES PRIVATE LIMITED** Address of Applicant :Flat no C/904, Geomatrix Dev, Plot no 29, Sector 25, Kamothe, Raigarh-410209, Maharashtra, India Maharashtra India
(31) Priority Document No	:NA	(72)**Name of Inventor :**
(32) Priority Date	:NA	**1)Mr. Bhaskar Vijay Ajgaonkar**
(33) Name of priority country	:NA	
(86) International Application No	:NA	
Filing Date	:NA	
(87) International Publication No	: NA	
(61) Patent of Addition to Application Number	:NA	
Filing Date	:NA	
(62) Divisional to Application Number	:NA	
Filing Date	:NA	

(57) Abstract :
The present invention discloses the system of project modifying in construction using augmented reality technology. The all data from databases is inputted to application. The user opens the application of project planning via smart phone or tab or in case of AR smart glass, user just wear smart glass. Hold the design of project in front of AR enabled device. User can see the 3-dimensional model of project with indoor and outdoor environment. Expert can make changes or modify the project just some tapping on AR device.

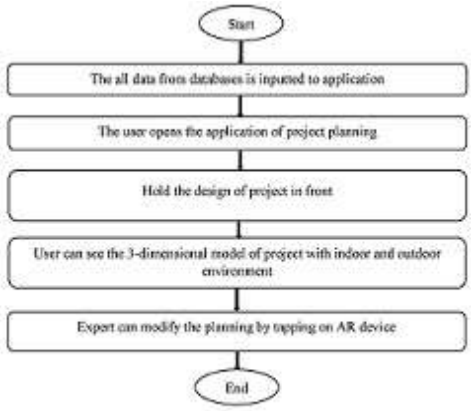

Fig. 1

No. of Pages : 8 No. of Claims : 4

(12) PATENT APPLICATION PUBLICATION
(19) INDIA
(22) Date of filing of Application :31/12/2019

(21) Application No.201921054822 A
(43) Publication Date : 02/07/2021

(54) Title of the invention : PROJECT PLANNING IN CONSTRUCTION USING AUGMENTED TECHNOLOGY •

(51) International classification	:G06Q0010060000, G06T0019000000, H04N0007180000, G06Q0030060000, G06K0009000000	(71)**Name of Applicant :** **1)MESBRO TECHNOLOGIES PRIVATE LIMITED** Address of Applicant :Flat no C/904, Geomatrix Dev, Plot no 29, Sector 25, Kamothe, Raigarh-410209, Maharashtra, India Maharashtra India
(31) Priority Document No	:NA	(72)**Name of Inventor :**
(32) Priority Date	:NA	**1)Mr. Bhaskar Vijay Ajgaonkar**
(33) Name of priority country	:NA	
(86) International Application No	:NA	
Filing Date	:NA	
(87) International Publication No	: NA	
(61) Patent of Addition to Application Number	:NA	
Filing Date	:NA	
(62) Divisional to Application Number	:NA	
Filing Date	:NA	

(57) Abstract :
The present invention discloses the system of project planning in construction using augmented reality technology. The all data from databases is inputted to application. The user opens the application of project planning via smart phone or tab or in case of AR smart glass, user just wear smart glass. Hold the design of project in front of AR enabled device. User can see the 3-dimensional model of project with indoor and outdoor environment.

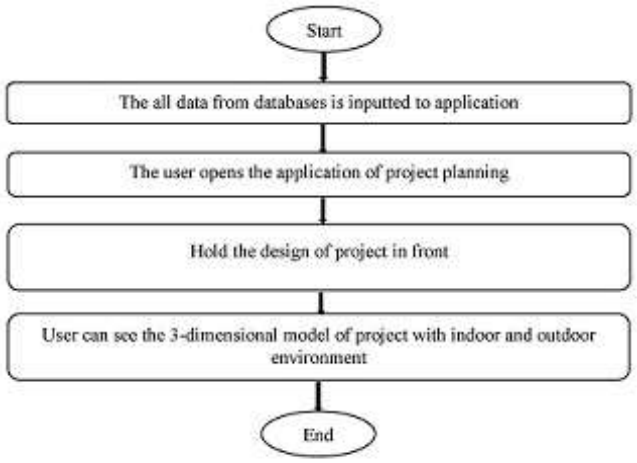

FIG 1

No. of Pages : 8 No. of Claims : 7

(12) PATENT APPLICATION PUBLICATION
(19) INDIA
(22) Date of filing of Application :31/12/2019

(21) Application No.201921054844 A
(43) Publication Date : 02/07/2021

(54) Title of the invention : A SYSTEM FOR ASSISTING ACTUATION OF A PARKING BRAKE ASSEMBLY

(51) International classification	:B60T0007080000, B60T0007120000, B60T0007040000, B60T0017220000, B60T0007100000	(71)**Name of Applicant :** **1)TATA MOTORS LIMITED** Address of Applicant :Bombay House, 24 Homi Mody Street, Hutatma Chowk, Mumbai. Maharashtra 400001, India Maharashtra India
(31) Priority Document No	:NA	(72)**Name of Inventor :**
(32) Priority Date	:NA	**1)Ravindra N. Babhulkar**
(33) Name of priority country	:NA	**2)Dipali Tulshidas Bendarkar**
(86) International Application No	:NA	
Filing Date	:NA	
(87) International Publication No	: NA	
(61) Patent of Addition to Application Number	:NA	
Filing Date	:NA	
(62) Divisional to Application Number	:NA	
Filing Date	:NA	

(57) Abstract :
The present disclosure discloses a system for assisting actuation of a parking brake assembly. The system includes a sensor, coupled to the parking brake lever and is configured to determine displacement of the parking brake lever between a first position and a second position. Further, an electro-magnetic actuator is coupled to an equalizer of the parking brake assembly, and a control unit is communicatively coupled to the sensor and the electro-magnetic actuator. The control unit is configured to receive a signal corresponding to actuation of the parking brake lever from the sensor. Based on the signal received, the control unit operates the electro-magnetic actuator to displace the equalizer for applying brakes on the wheels of the vehicle. The configuration of the system reduces the efforts required for operating the parking brake lever and also allow operation of the parking brake assembly during emergency. Figures 4 and 5 are representative figures.

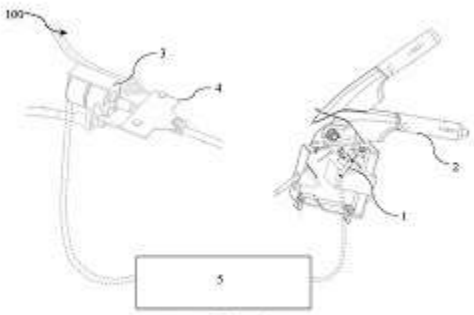

Figure 4

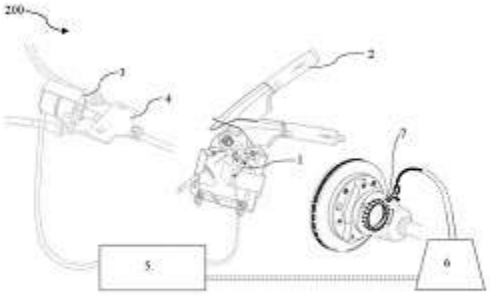

Figure 5

No. of Pages : 22 No. of Claims : 15

(12) PATENT APPLICATION PUBLICATION
(19) INDIA
(22) Date of filing of Application :01/01/2020

(21) Application No.202021000001 A
(43) Publication Date : 02/07/2021

(54) Title of the invention : A MODULAR AND CONFIGURABLE ELECTRICAL DEVICE GROUP

(51) International classification	:H04L0029060000, H05K0001020000, H04B0001380000, H04N0021436000, F24F0001020000	(71)**Name of Applicant :** **1)SELEC CONTROLS PRIVATE LIMITED** Address of Applicant :EL27/1, Electronic Zone, TTC Industrial Area, MIDC, Mahape,Navi Mumbai 400710 Maharashtra India
(31) Priority Document No	:NA	(72)**Name of Inventor :**
(32) Priority Date	:NA	**1)Samir KAJI**
(33) Name of priority country	:NA	
(86) International Application No	:NA	
Filing Date	:NA	
(87) International Publication No	: NA	
(61) Patent of Addition to Application Number	:NA	
Filing Date	:NA	
(62) Divisional to Application Number	:NA	
Filing Date	:NA	

(57) Abstract :
A modular and configurable electrical device group 10 for measurement, control and display, comprising a first sub-group 11 having a base mountable enclosure unit 21, and a second sub-group 12 having a neck mountable enclosure unit 22, together with a programmable computing receptacle assembly 390, a plurality of function modules 300, a display module 350 and optionally a battery module 380; each member of the group 10 being an independently configurable application specific electrical control device, or as a slave or a master, or in combination to another member; the function module 300 may be an add-on function module 300A, and the display module 350 may be an add-on display module 350A, the function modules 300 mounted with a precisely engaging electrical arrangement till a defined engagement dimension, the function module 300 and the display module 350 securely removed, the display module 350 may have no display component.

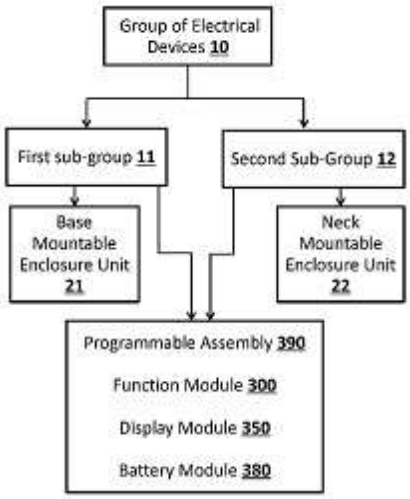

Figure 1

No. of Pages : 68 No. of Claims : 20

(12) PATENT APPLICATION PUBLICATION
(19) INDIA
(22) Date of filing of Application :01/01/2020
(21) Application No.202021000003 A
(43) Publication Date : 02/07/2021

(54) Title of the invention : METHOD FOR REAL TIME FORECASTING OF FLOOD RISK CONSIDERING HAZARD, EXPOSURE AND VULNERABILITY

(51) International classification	:G06Q0010040000, G01W0001020000, G01W0001100000, G06Q0010060000, A61B0005026000	(71)**Name of Applicant :** **1)INDIAN INSTITUTE OF TECHNOLOGY BOMBAY** Address of Applicant :Indian Institute of Technology Bombay, Powai, Mumbai, Maharashtra, India, 400076. Maharashtra India
(31) Priority Document No	:NA	(72)**Name of Inventor :** **1)Ghosh Subimal**
(32) Priority Date	:NA	**2)Tripathy Shrabani Sailaja**
(33) Name of priority country	:NA	**3)Karmakar Subhankar**
(86) International Application No	:NA	
Filing Date	:NA	
(87) International Publication No	: NA	
(61) Patent of Addition to Application Number	:NA	
Filing Date	:NA	
(62) Divisional to Application Number	:NA	
Filing Date	:NA	

(57) Abstract :
The present invention provides a system and method thereof for determining at least one hazard by processing at least one hindcast data set, at least one observational data set and at least one rainfall forecast event data, determining at least one vulnerability by processing at least one geomorphologic vulnerability set and at least one socioeconomic vulnerability set, determining at least one exposure by processing at least one land use data set and at least one land cover data set, estimating at least one risk set distributed spatially over a region by processing the at least one hazard, the at least one vulnerability, and the at least one exposure, generating at least one weather scale event based flood risk real time forecast, generating a plurality of risk maps at least at one weather scale using the real time forecast and present the same to the end user. Reference figure: figure 1

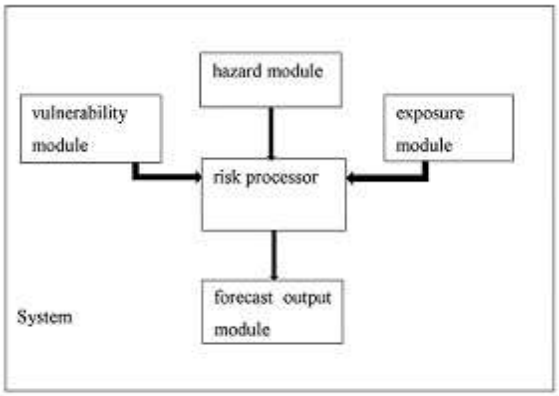

Figure 1

No. of Pages : 35 No. of Claims : 18

(12) PATENT APPLICATION PUBLICATION
(19) INDIA
(22) Date of filing of Application :01/01/2020

(21) Application No.202021000055 A
(43) Publication Date : 02/07/2021

(54) Title of the invention : INNOVATIVE ELECTRIC MOTOR & THERMOELECTRIC GENERATOR IN VEHICLE

(51) International classification	:H02K0003520000, H02K0021240000, H02K0029080000, H02K0011330000, F03D0080700000	(71)**Name of Applicant :** **1)DAULAT BAJIRAO MULGAONKAR** Address of Applicant :997-B, NEAR CIVIL HOSPITAL, RATNAGIRI - 415613, MAHARASHTRA, INDIA. Maharashtra India
(31) Priority Document No	:NA	(72)**Name of Inventor :**
(32) Priority Date	:NA	**1)DAULAT BAJIRAO MULGAONKAR**
(33) Name of priority country	:NA	
(86) International Application No	:NA	
Filing Date	:NA	
(87) International Publication No	: NA	
(61) Patent of Addition to Application Number	:NA	
Filing Date	:NA	
(62) Divisional to Application Number	:NA	
Filing Date	:NA	

(57) Abstract :
An electric motor which converts electrical energy into mechanical energy having one stationary part called stator which is rigidly mounted on an outer frame. And coil wounded body called rotor which is mounted on the central shaft. The magnetic member called stator forms north or south magnetic poles. The central shaft is coupled rotatable with the help of bearings on the frame perpendicular to the stator as well as rotor poles. The adjacent coils provide magnetic interaction between the stator coil and the rotor coil for rotating the shaft. As the rotor is short-circuited it completes its current path by their own and form their own magnetic field by right hand thumb rule. Terminal posts are use as plugs either receive current wire for use of electricity or plug into another module to multiply the H.P.

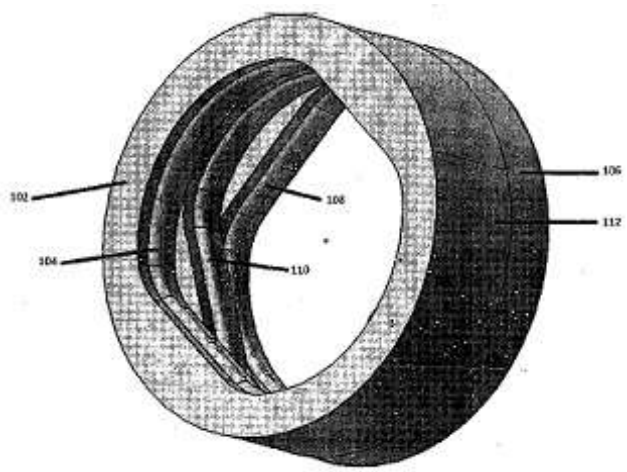

No. of Pages : 19 No. of Claims : 8

(12) PATENT APPLICATION PUBLICATION
(19) INDIA
(22) Date of filing of Application :16/06/2020
(21) Application No.202024025218 A
(43) Publication Date : 02/07/2021

(54) Title of the invention : A SIDEBAR INTERACTION METHOD, DEVICE, AND COMPUTER-READABLE STORAGE MEDIUM

(51) International classification	:G06F0003048400, G06F0003048800, G06F0003048100, G06F0003048200, G06F0009451000
(31) Priority Document No	:201911385881.2
(32) Priority Date	:25/12/2019
(33) Name of priority country	:China
(86) International Application No	:PCT//
Filing Date	:01/01/1900
(87) International Publication No	: NA
(61) Patent of Addition to Application Number	:NA
Filing Date	:NA
(62) Divisional to Application Number	:NA
Filing Date	:NA

(71)**Name of Applicant :**
1)Shanghai Transsion Co., Ltd.
Address of Applicant :Floor 1, Building No.1 No.36 Xuelin Road, Pudong district, Shanghai, PRC China
(72)**Name of Inventor :**
1)XIAO, Ming
2)LI, Lingzhi
3)LU, Weifeng
4)LIU, Shichao
5)XU, Wei

(57) Abstract :
ABSTRACT A SIDEBAR INTERACTION METHOD, DEVICE, AND COMPUTER-READABLE STORAGE MEDIUM
Disclosed are a sidebar interaction method, a device and a computer readable storage medium. The method includes: receiving an instruction to initiate an interaction, generating an interaction module on a currently operating interface of a front-end application, outputting at least one notification message in the interaction module; initiating a back-end application, displaying a sidebar in a first target display area on the currently operating interface; and detecting a preset operation corresponding to the sidebar and responding to the preset operation. The sidebar interaction module is arranged, and notification message interception is carried out through the sidebar interaction module, so that the interference is reduced when different applications or different functions of the same application interact. The sidebar interaction is more reasonable. The sidebar for auxiliary application is displayed on the operating interface, improving the perception a user™s perception to a third-party program corresponding to the auxiliary function. (to be published with figure 2)

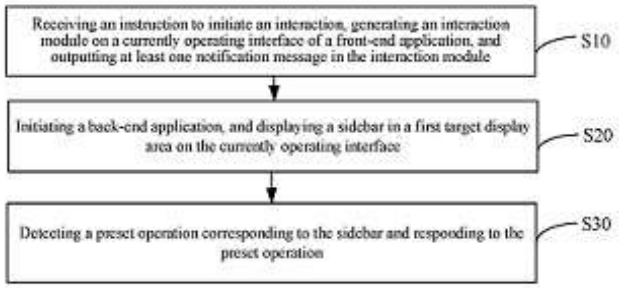

FIGURE 2

No. of Pages : 120 No. of Claims : 31

(12) PATENT APPLICATION PUBLICATION
(19) INDIA
(22) Date of filing of Application :22/12/2020
(21) Application No.202024055812 A
(43) Publication Date : 02/07/2021

(54) Title of the invention : DUST COLLECTOR HOOD, DUST COLLECTION SYSTEM AND DUST COLLECTOR

(51) International classification	:B23Q0011000000, B23Q0003060000, E21B0021015000, B25D0017180000, B23B0047340000	(71)**Name of Applicant :** **1)ATLAS COPCO AIRPOWER, NAAMLOZE VENNOOTSCHAP** Address of Applicant :BOOMSESTEENWEG 957 2610 WILRIJK, BELGIUM Belgium
(31) Priority Document No	:201922499879.X	(72)**Name of Inventor :**
(32) Priority Date	:31/12/2019	**1)RAJPUT, Prashant K**
(33) Name of priority country	:China	**2)PATIL, Vishal Krishnarao**
(86) International Application No	:NA	**3)SHARMA, Vijay Sohanlal**
Filing Date	:NA	
(87) International Publication No	: NA	
(61) Patent of Addition to Application Number	:NA	
Filing Date	:NA	
(62) Divisional to Application Number	:NA	
Filing Date	:NA	

(57) Abstract :
The present invention discloses a dust collector hood (10), a dust collection system (100) and a drilling tool (200). The dust collector hood (10) includes a drilling tool penetrating cavity (1) configured to be penetrated by a drilling tool (200). A dust suction zone (12) is formed in the drilling tool penetrating cavity (1) and is configured to absorb dust generated by drilling of the drilling tool (200). A drilling tool positioning piece (3) is disposed in the dust collector hood (10) and configured to locate the drilling tool radially. According to the dust collector hood (10) provided by the present invention, after being manufactured separately, the dust collector hood (10) may be fixed to the tool bit portion (201) through the drilling tool positioning piece (3). The dust collector hood (10) is easy to manufacture, and may avoid the vibration of the drilling tool (200) during drilling, which would otherwise affect the operation.

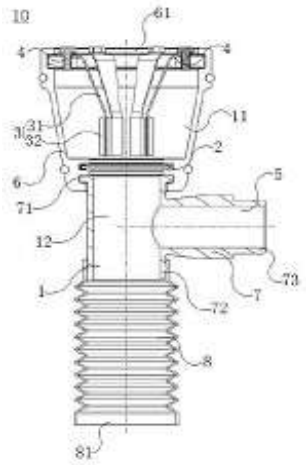

FIG. 1

No. of Pages : 17 No. of Claims : 17

(12) PATENT APPLICATION PUBLICATION
(19) INDIA
(22) Date of filing of Application :28/12/2020

(21) Application No.202024056585 A
(43) Publication Date : 02/07/2021

(54) Title of the invention : PRECAST FOUNDATION STRUCTURE FOR A WIND TURBINE, WIND TURBINE AND ASSEMBLY METHOD OF A WIND TURBINE

(51) International classification	:E02D0027420000, F03D0013200000, E02D0027520000, E04H0012340000, F03D0013100000
(31) Priority Document No	:19383224.3
(32) Priority Date	:31/12/2019
(33) Name of priority country	:EUROPEAN UNION
(86) International Application No	:NA
Filing Date	:NA
(87) International Publication No	: NA
(61) Patent of Addition to Application Number	:NA
Filing Date	:NA
(62) Divisional to Application Number	:NA
Filing Date	:NA

(71)**Name of Applicant :**
1)NORDEX ENERGY SPAIN, S.A.U.
Address of Applicant :POLIGONO INDUSTRIAL BARASOAIN, PARCELA 2, 31395 BARASOAIN (NAVARRA), SPAIN Spain
(72)**Name of Inventor :**
1)GARDU'O ESTEBANEZ, Aitor
2)GARC • A MAESTRE, Iv¡n
3)AR • STEGUI LANTERO, Jose Luis
4)Nš'EZ POLO, Miguel

(57) Abstract :
The present invention relates to a precast foundation structure for a wind turbine that is independent of the type of ground since a large part of the precast foundation structure is homogenized and wherein the size of a transition structures does not change when the ground conditions do since the precast foundation structure for a wind turbine easily adaptable to the geotechnical conditions of each wind turbine position of the windfarm which allows a significant reduction in time and cost.

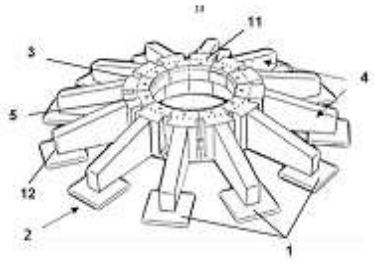

FIG. 1

No. of Pages : 15 No. of Claims : 18

(12) PATENT APPLICATION PUBLICATION
(19) INDIA
(22) Date of filing of Application :29/12/2020
(21) Application No.202024056928 A
(43) Publication Date : 02/07/2021

(54) Title of the invention : PASSIVE SECURITY CHECKING DEVICE AND RECEIVINGANTENNA UNIT THEREOF

(51) International classification	:H01Q0013020000, H01Q0001320000, H04B0007080000, G09G0003200000, H05H0001460000
(31) Priority Document No	:201911402451.7
(32) Priority Date	:30/12/2019
(33) Name of priority country	:China
(86) International Application No	:NA
Filing Date	:NA
(87) International Publication No	: NA
(61) Patent of Addition to Application Number	:NA
Filing Date	:NA
(62) Divisional to Application Number	:NA
Filing Date	:NA

(71)**Name of Applicant :**
1)NUCTECH COMPANY LIMITED
Address of Applicant :2nd Floor, Block A,TongFang Building, Shuangqinglu, Haidian District, Beijing 100084,P.R.China China
2)TSINGHUA UNIVERSITY
(72)**Name of Inventor :**
1)LI, Yuanjing
2)YOU, Yan
3)MA, Xuming
4)ZHAO, Ziran
5)LIU, Wenguo
6)CHEN, Zhiqiang
7)XIE, Huan

(57) Abstract :
A passive security checking device and a receiving antenna unit thereof are disclosed. The receiving antenna unit includes at least one horn antenna including a horn body and a waveguide connected thereto. A ratio of a long side to a short side of a horn opening of the horn body is greater than 1.2. The passive security checking device and receiving antenna unit thereof can solve the problem, faced by normal horn antennae, of contradiction between a sampling interval and coupling efficiency. Fig. 4

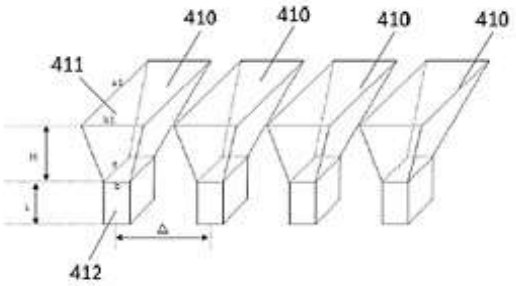

Fig. 4

No. of Pages : 36 No. of Claims : 14

(12) PATENT APPLICATION PUBLICATION
(19) INDIA
(22) Date of filing of Application :29/12/2020
(21) Application No.202024056942 A
(43) Publication Date : 02/07/2021

(54) Title of the invention : DEVICE FOR MIXING OR MULTIPLYING FREQUENCY

(51) International classification	:H03D0007140000, B01L0003000000, H01P0001213000, F21K0009232000, F21V0003020000
(31) Priority Document No	:201911425351.6
(32) Priority Date	:31/12/2019
(33) Name of priority country	:China
(86) International Application No	:NA
Filing Date	:NA
(87) International Publication No	: NA
(61) Patent of Addition to Application Number	:NA
Filing Date	:NA
(62) Divisional to Application Number	:NA
Filing Date	:NA

(71)**Name of Applicant :**
1)TSINGHUA UNIVERSITY
Address of Applicant :No.1, Tsinghua Yuan, Haidian District, Beijing, 100084, P.R.China China
2)NUCTECH COMPANY LIMITED
(72)**Name of Inventor :**
1)ZHAO, Ziran
2)CHEN, Zhiqiang
3)LI, Yuanjing
4)HU, Haifan
5)MA, Xuming
6)HUANG, Shiwei

(57) Abstract :
The present disclosure provides a device for mixing or multiplying frequency, including: a metal housing including a box body and a cover buckled together to define a metal cavity; and at least one frequency conversion unit including a microstrip line located in the metal cavity, and a channel structure including a radio frequency signal input channel, a local oscillator signal input channel and a signal output channel, the radio frequency signal input channel, the local oscillator signal input channel and the signal output channel pass through the metal housing and are coupled to the microstrip line respectively, wherein at least two of a plane where the radio frequency signal input channel is located, a plane where the local oscillator signal input channel is located and a plane where the signal output channel is located are not coplanar. FIG. 1

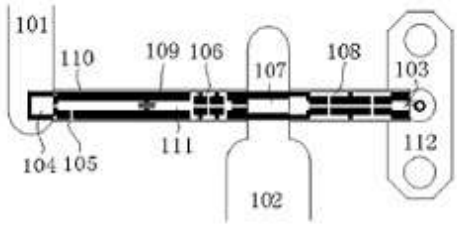

FIG. 1

No. of Pages : 39 No. of Claims : 15

(12) PATENT APPLICATION PUBLICATION
(19) INDIA
(22) Date of filing of Application :30/12/2020
(21) Application No.202024057209 A
(43) Publication Date : 02/07/2021

(54) Title of the invention : DEVICE FOR MIXING OR MULTIPLYING FREQUENCY

(51) International classification	:G01F0001684000, G01F0005000000, F21V0015010000, H03D0007140000, F21V0003020000	(71)**Name of Applicant :** **1)TSINGHUA UNIVERSITY** Address of Applicant :No.1, Tsinghua Yuan, Haidian District, Beijing, 100084, P.R.China China **2)NUCTECH COMPANY LIMITED**
(31) Priority Document No	:201911425658.6	(72)**Name of Inventor :**
(32) Priority Date	:31/12/2019	**1)Zhiqiang CHEN**
(33) Name of priority country	:China	**2)Yuanjing LI**
(86) International Application No	:NA	**3)Ziran ZHAO**
Filing Date	:NA	**4)Haifan HU**
(87) International Publication No	: NA	**5)Xuming MA**
(61) Patent of Addition to Application Number	:NA	**6)Shiwei HUANG**
Filing Date	:NA	
(62) Divisional to Application Number	:NA	
Filing Date	:NA	

(57) Abstract :
The present disclosure provides a device for mixing or multiplying frequency, including: a metal housing including a box body and a cover buckled together to define a metal cavity; and at least one frequency conversion unit including: a microstrip line located in the metal cavity; and a channel structure including a radio frequency signal input channel, a local oscillator signal input channel and a signal output channel, the radio frequency signal input channel, the local oscillator signal input channel and the signal output channel pass through the metal housing and are coupled to the microstrip line respectively, wherein the signal output channel is led out at an angle with respect to a plane where the microstrip line is located. FIG.1

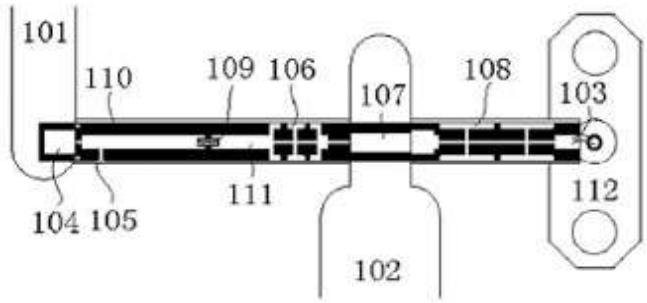

FIG.1

No. of Pages : 24 No. of Claims : 14

(12) PATENT APPLICATION PUBLICATION
(21) Application No.202027029197 A
(19) INDIA
(22) Date of filing of Application :09/07/2020
(43) Publication Date : 02/07/2021

(54) Title of the invention : ENVIRONMENTALLY FRIENDLY AND ENERGY-SAVING BLAST FURNACE SLAG INTELLIGENT TREATMENT SYSTEM

(51) International classification :C21B 3/08
(31) Priority Document No :201811609247.8
(32) Priority Date :27/12/2018
(33) Name of priority country :China
(86) International Application No :PCT/CN2019/128977
Filing Date :27/12/2019
(87) International Publication No :WO 2020/135660
(61) Patent of Addition to Application Number :NA
Filing Date :NA
(62) Divisional to Application Number :NA
Filing Date :NA

(71)**Name of Applicant :**
1)MCC CAPITAL ENGINEERING & RESEARCH INCORPORATION LIMITED
Address of Applicant :No. 7 Jian'an St., Beijing Economic-Technological Development Area Beijing 100176 China
(72)**Name of Inventor :**
1)WANG, Degang
2)DUAN, Guojian
3)CHEN, Xiujuan
4)QUAN, Qiang
5)MENG, Kaibiao
6)SU, Liwei
7)MA, Ming
8)FAN, Bo
9)JIN, Zheng

(57) Abstract :
Disclosed is an environmentally friendly and energy-saving blast furnace slag intelligent treatment system, comprising a granulating tower (1), a chimney (3), a filtering tank (7), a hot water heat exchange unit, a cooling tower (11), a water storage tank (12), a slag-conveying automobile (9), and an intelligent slag-grabbing apparatus (8). The filtering tank (7), the hot water heat exchange unit, the cooling tower (11) and the water storage tank (12) are successively connected in series, and the intelligent slag-grabbing apparatus (8) can grab water granulated slag in the filtering tank (7). The environmentally friendly and energy-saving blast furnace slag intelligent treatment system can not only fully recycle steam heat energy in a granulating process, but can also recycle the heat energy of slag washing water and steam of the filtering tank (7). Meanwhile, the workload of the cooling tower (11) is reduced, the emission of sulfur-containing steam in a slag treatment process can be reduced to realize white smoke elimination treatment, and energy conservation and emission reduction and effective cyclic utilization of energy are actually realized; and the intelligent slag grabbing and unloading operation on slag particles in the filtering tank (7) is realized through the intelligent slag-grabbing apparatus (8).

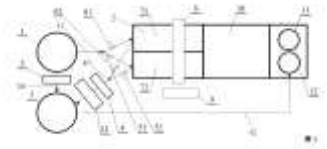

No. of Pages : 18 No. of Claims : 10

(12) PATENT APPLICATION PUBLICATION
(19) INDIA
(22) Date of filing of Application :02/09/2020

(21) Application No.202027037887 A
(43) Publication Date : 02/07/2021

(54) Title of the invention : DRIP IRRIGATION EMITTER

(51) International classification :A01G 25/02
(31) Priority Document No :16/280550
(32) Priority Date :20/02/2019
(33) Name of priority country :U.S.A.
(86) International Application No :PCT/IB2019/061359
Filing Date :25/12/2019
(87) International Publication No :WO 2020/170026
(61) Patent of Addition to Application Number :NA
Filing Date :NA
(62) Divisional to Application Number :NA
Filing Date :NA

(71)**Name of Applicant :**
1)AMIRIM PRODUCTS DEVELOPMENT & PATENTS LTD
Address of Applicant :52 Oren Street Yuvalim 2014200 Doar-Na Misgav Israel
(72)**Name of Inventor :**
1)COHEN, Amir

(57) Abstract :
A drip emitter sized for insertion into a liquid supply tube and positioned adjacent to a dripping aperture in the tube is provided that comprises an emitter body having a convex side configured to internally and adjacently fit the tube and an opposite flat side comprising a regulator, wherein the convex side comprising an outlet chamber configured to be fluidically connected to the dripping aperture, a membrane covering at least the regulator, a cover provided with a liquid intake having a filter, wherein the cover is configured to envelop the emitter body except of most of said convex side, and a locking mechanism connecting the flat side and an inner surface of the cover that is adjacent to the flat side so as to join the cover to the emitter body, wherein the membrane is retained therebetween.

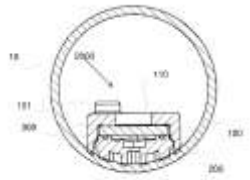

FIG. 1A

No. of Pages : 20 No. of Claims : 20

(12) PATENT APPLICATION PUBLICATION
(19) INDIA
(22) Date of filing of Application :31/12/2020

(21) Application No.202027057363 A
(43) Publication Date : 02/07/2021

(54) Title of the invention : DIRECT-TYPE BACKLIGHT MODULE AND DISPLAY

(51) International classification	:G02F0001133570, F21Y0115100000, F21V0017100000, F21V0019000000, A61B0001267000
(31) Priority Document No	:201822219048.8
(32) Priority Date	:27/12/2018
(33) Name of priority country	:China
(86) International Application No	:PCT/CN2019/128106
Filing Date	:25/12/2019
(87) International Publication No	:WO 2020/135459
(61) Patent of Addition to Application Number	:NA
Filing Date	:NA
(62) Divisional to Application Number	:NA
Filing Date	:NA

(71)**Name of Applicant :**
1)SHENZHEN TCL NEW TECHNOLOGY CO., LTD.
Address of Applicant :9th Floor, Building D4, TCL International E City No.1001, Zhongshan Park Road, Xili Street, Nanshan District Shenzhen, Guangdong 518052 China
(72)**Name of Inventor :**
1)LIN, Yifeng

(57) Abstract :
Disclosed are a direct-type backlight module and a display. The direct-type backlight module comprises: a back plate (10), an optical assembly (30), a middle frame (20) arranged on a front face of the back plate (10) and located at the periphery of the optical assembly (30), and a cooling fin (60) and a mini led lamp panel (40) both located between the back plate (10) and the optical assembly (30), wherein the cooling fin (60) is connected to the back plate (10), the mini led lamp panel is connected to the cooling fin, and the optical assembly (30) is connected to the middle frame (20) and makes contact with the mini led lamp panel (40). The mini led lamp panel (40) is used to make contact with the optical assembly (30), an OD value is zero, and light emitted by the mini led lamp panel (40) can uniformly irradiate on the optical assembly (30), so that the thickness of the direct-type backlight module is greatly reduced.

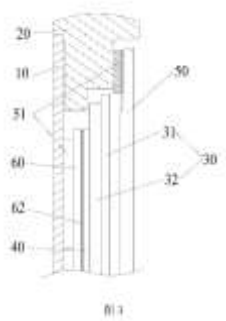

No. of Pages : 14 No. of Claims : 20

(12) PATENT APPLICATION PUBLICATION
(19) INDIA
(22) Date of filing of Application :31/12/2020

(21) Application No.202027057365 A
(43) Publication Date : 02/07/2021

(54) Title of the invention : SMART TELEVISION INTERACTION METHOD, STORAGE MEDIUM, AND SMART TELEVISION

(51) International classification	:H04W0004800000, H04N0021422000, H04W0076140000, H04W0076100000, H04N0021436300
(31) Priority Document No	:201910128700.1
(32) Priority Date	:21/02/2019
(33) Name of priority country	:China
(86) International Application No	:PCT/CN2019/130079
Filing Date	:30/12/2019
(87) International Publication No	:WO 2020/168830
(61) Patent of Addition to Application Number	:NA
Filing Date	:NA
(62) Divisional to Application Number	:NA
Filing Date	:NA

(71)**Name of Applicant :**
1)SHENZHEN SKYWORTH-RGB ELECTRONIC CO., LTD
Address of Applicant :13-16 F, Unit A, Skyworth Building, Shennan Road, Nanshan District Shenzhen, Guangdong 518052 China
(72)**Name of Inventor :**
1)ZHAO, Xinke
2)LI, Jian
3)HONG, Wensheng

(57) Abstract :
Disclosed are a smart television interaction method, a storage medium, and a smart television. The method comprises: when the smart television receives a screen mirroring request, establishing a Bluetooth connection with a mobile terminal corresponding to the screen mirroring request according to the screen mirroring request, and carrying out screen mirroring; and receiving a control instruction for controlling the mobile terminal, and broadcasting the control instruction via Bluetooth, so that the mobile terminal executes the control instruction. According to the present disclosure, when the smart television establishes a screen mirroring connection with the mobile terminal, the smart television establishes the Bluetooth connection with the mobile terminal, and obtains right of control on the mobile terminal via the Bluetooth to control the mobile terminal. Therefore, dependence on the mobile terminal is avoided, and the trouble of using the mobile terminal for a long time is solved.

No. of Pages : 18 No. of Claims : 15

(12) PATENT APPLICATION PUBLICATION
(19) INDIA
(22) Date of filing of Application :19/02/2021

(21) Application No.202127007130 A
(43) Publication Date : 02/07/2021

(54) Title of the invention : STEEL SHEET AND MANUFACTURING METHOD THEREFOR

(51) International classification	:C22C0038000000, C21D0009460000, C22C0038060000, C23C0002400000, C22C0038020000
(31) Priority Document No	:2018-196149
(32) Priority Date	:17/10/2018
(33) Name of priority country	:Japan
(86) International Application No	:PCT/JP2019/040662
Filing Date	:16/10/2019
(87) International Publication No	:WO 2020/080401
(61) Patent of Addition to Application Number	:NA
Filing Date	:NA
(62) Divisional to Application Number	:NA
Filing Date	:NA

(71)**Name of Applicant :**
1)JFE STEEL CORPORATION
Address of Applicant :2-3, Uchisaiwai-cho 2-chome, Chiyoda-ku, Tokyo 1000011 Japan
(72)**Name of Inventor :**
1)ONO Yoshihiko
2)TOBATA Junya
3)AKIMOTO Hiroyuki
4)MATSUI Yoichiro
5)KANEKO Shinjiro

(57) Abstract :
Provided are a steel sheet and a manufacturing method therefor. The present invention provides a steel sheet having a specific component composition and a steel structure wherein: in terms of area ratio, at most 5% of ferrite and 95-100% of a structure comprising one or two or more of upper bainite, fresh martensite, tempered martensite, lower bainite, and residual are contained; in terms of volume ratio, 5-20% of residual is contained; the area ratio SUB of residual UB having a particle width of 0.25-0.60 μm, a particle length of 1.0-15 μm, and an aspect ratio of 3.1-25 is 0.2-7.0%; the number of distributed particles NLB of residual LB having a particle width of 0.08-0.24 μm, a particle length of 0.6-15 μm, and an aspect ratio of 4-40 is 10-120 particles per 100 μm2; the total area ratio SFine of fresh martensite having a circle-equivalent particle diameter of 0.5 μm or more and less than 1.3 μm and an aspect ratio of 3 or less and/or residual particles having a circle-equivalent particle diameter of 0.5 μm or more and less than 1.3 μm and an aspect ratio of 3 or less is 1-10%; and the total area ratio SBlock of fresh martensite having a circle-equivalent particle diameter of 1.5-20 μm and an aspect ratio of 3 or less and/or residual particles having a circle-equivalent particle diameter of 1.5-20 μm and an aspect ratio of 3 or less is 5% or less (including 0%).

No. of Pages : 72 No. of Claims : 13

(12) PATENT APPLICATION PUBLICATION
(19) INDIA
(22) Date of filing of Application :19/02/2021

(21) Application No.202127007131 A
(43) Publication Date : 02/07/2021

(54) Title of the invention : STEEL SHEET AND MANUFACTURING METHOD THEREFOR

(51) International classification	:C22C0038000000, C21D0009460000, C22C0038060000, C22C0038020000, C22C0038040000
(31) Priority Document No	:2018-196150
(32) Priority Date	:17/10/2018
(33) Name of priority country	:Japan
(86) International Application No	:PCT/JP2019/040663
Filing Date	:16/10/2019
(87) International Publication No	:WO 2020/080402
(61) Patent of Addition to Application Number	:NA
Filing Date	:NA
(62) Divisional to Application Number	:NA
Filing Date	:NA

(71)**Name of Applicant :**
1)JFE STEEL CORPORATION
Address of Applicant :2-3, Uchisaiwai-cho 2-chome, Chiyoda-ku, Tokyo 1000011 Japan
(72)**Name of Inventor :**
1)ONO Yoshihiko
2)TOBATA Junya
3)AKIMOTO Hiroyuki
4)MATSUI Yoichiro
5)KANEKO Shinjiro

(57) Abstract :
Provided are a steel sheet and a manufacturing method therefor. The present invention provides a steel sheet having a specific component composition and a steel structure wherein: in terms of area ratio, at most 5% of ferrite and 95-100% of a structure comprising one or two or more of upper bainite, fresh martensite, tempered martensite, lower bainite, and residual are contained; in terms of volume ratio, 4-15% of residual is contained; the area ratio SUB of residual UB having a particle width of 0.25-0.60 μm, a particle length of 1.0-15 μm, and an aspect ratio of 3.1-25 is 0.2-7.0%; the number of distributed particles NLB of residual LB having a particle width of 0.08-0.24 μm, a particle length of 0.6-15 μm, and an aspect ratio of 4-40 is 10-120 particles per 100 μm2; the total area ratio SFine of fresh martensite having a circle-equivalent particle diameter of 0.4-1.0 μm and an aspect ratio of 3 or less and/or residual particles having a circle-equivalent particle diameter of 0.4-1.0 μm and an aspect ratio of 3 or less is 0.4-5.0%; and the total area ratio SBlock of fresh martensite having a circle-equivalent particle diameter of 1.2-20 μm and an aspect ratio of 3 or less and/or residual particles having a circle-equivalent particle diameter of 1.2-20 μm and an aspect ratio of 3 or less is 4% or less (including 0%).

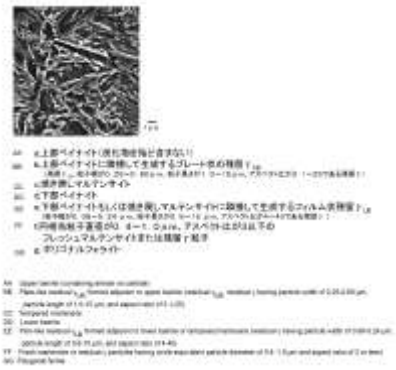

No. of Pages : 71 No. of Claims : 13

(12) PATENT APPLICATION PUBLICATION
(19) INDIA
(22) Date of filing of Application :20/02/2021

(21) Application No.202127007186 A
(43) Publication Date : 02/07/2021

(54) Title of the invention : POWER CONTROL METHOD AND TERMINAL FOR PHYSICAL RANDOM ACCESS CHANNEL

(51) International classification	:H04W0074080000, H04W0052240000, H04W0052140000, H04W0056000000, H04W0052400000
(31) Priority Document No	:201810804585.0
(32) Priority Date	:20/07/2018
(33) Name of priority country	:China
(86) International Application No	:PCT/CN2019/096131
Filing Date	:16/07/2019
(87) International Publication No	:WO 2020/015628
(61) Patent of Addition to Application Number	:NA
Filing Date	:NA
(62) Divisional to Application Number	:NA
Filing Date	:NA

(71)**Name of Applicant :**
1)VIVO MOBILE COMMUNICATION CO.,LTD.
Address of Applicant :#283, BBK Road, Wusha, Chang'an Dongguan, Guangdong 523860 China
(72)**Name of Inventor :**
1)SUN, Xiaodong
2)SUN, Peng
3)PAN, Xueming
4)YANG, Yu

(57) Abstract :
Provided are a power control method and terminal for a physical random access channel (PRACH). The method comprises: according to power information related to a synchronization broadcast signal block, calculating the path loss of the PRACH; and according to the path loss, calculating the transmit power of the PRACH.

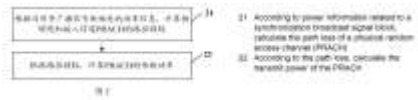

No. of Pages : 33 No. of Claims : 20

(12) PATENT APPLICATION PUBLICATION
(19) INDIA
(22) Date of filing of Application :20/02/2021

(21) Application No.202127007203 A
(43) Publication Date : 02/07/2021

(54) Title of the invention : MEASUREMENT INDICATION METHOD, APPARATUS AND SYSTEM

(51) International classification	:H04W0024100000, H04W0024080000, H04W0036000000, H04L0005000000, H04W0024020000
(31) Priority Document No	:201810806688.0
(32) Priority Date	:20/07/2018
(33) Name of priority country	:China
(86) International Application No	:PCT/CN2019/096373
Filing Date	:17/07/2019
(87) International Publication No	:WO 2020/015681
(61) Patent of Addition to Application Number	:NA
Filing Date	:NA
(62) Divisional to Application Number	:NA
Filing Date	:NA

(71)**Name of Applicant :**
1)VIVO MOBILE COMMUNICATION CO., LTD.
Address of Applicant :#283, BBK Road, Wusha, Chang'an Dongguan, Guangdong 523860 China
(72)**Name of Inventor :**
1)YANG, Xiaodong
2)ZHENG, Qian
3)BAO, Wei

(57) Abstract :
Disclosed are a measurement indication method, apparatus and system that are capable of solving the problem that a UE cannot configure a secondary cell for the UE in a timely manner. The specific solution comprises: a UE receiving first information sent by a network side device, wherein the first information is measurement configuration information or system information; and the UE determining second information according to the first information, wherein the second information comprises a first target radio access technology (RAT) type. The first information is measurement configuration information, and the second information is used for indicating for the UE to measure a region corresponding to the first target RAT type; or the first information is system information, and the second information is used for indicating the validity of a measurement result corresponding to the first target RAT type measured by the UE. The embodiments of the present invention are applied to the process of a UE performing measurement or reporting the validity of a measurement result.

No. of Pages : 35 No. of Claims : 28

(12) PATENT APPLICATION PUBLICATION
(19) INDIA
(22) Date of filing of Application :20/02/2021

(21) Application No.202127007222 A
(43) Publication Date : 02/07/2021

(54) Title of the invention : METHOD FOR CELL SELECTION, USER EQUIPMENT, AND NETWORK SIDE DEVICE

(51) International classification	:H04W0048120000, H04W0048020000, H04W0048160000, H04W0048200000, H04W0036000000
(31) Priority Document No	:201810805974.5
(32) Priority Date	:20/07/2018
(33) Name of priority country	:China
(86) International Application No	:PCT/CN2019/096325
Filing Date	:17/07/2019
(87) International Publication No	:WO 2020/015671
(61) Patent of Addition to Application Number	:NA
Filing Date	:NA
(62) Divisional to Application Number	:NA
Filing Date	:NA

(71)**Name of Applicant :**
1)VIVO MOBILE COMMUNICATION CO., LTD.
Address of Applicant :#283, BBK Road, Wusha, Chang'an Dongguan, Guangdong 523860 China
(72)**Name of Inventor :**
1)BAO, Wei
2)WU, Yumin
3)YUE, Ran

(57) Abstract :
Provided are a method for cell selection, a user equipment unit, and a network side device. The method comprises: a user equipment (UE) unit reading first system information of a first cell at a first frequency point; and if the first system information of the first cell indicates barring of camping and intra-frequency re-selection and a set condition is satisfied, the UE unit refraining from performing selection, or re-selection, or selection and re-selection with respect to the cell at the first frequency point.

No. of Pages : 36 No. of Claims : 32

(12) PATENT APPLICATION PUBLICATION
(19) INDIA
(22) Date of filing of Application :22/02/2021

(21) Application No.202127007341 A
(43) Publication Date : 02/07/2021

(54) Title of the invention : ENERGY AUDIT TOOL FOR A WIND TURBINE POWER SYSTEM

(51) International classification	:F03D0013200000, F03D0080500000, G06Q0050060000, F03D0007040000, H02J0003000000
(31) Priority Document No	:16/126408
(32) Priority Date	:10/09/2018
(33) Name of priority country	:U.S.A.
(86) International Application No	:PCT/US2019/050172
Filing Date	:09/09/2019
(87) International Publication No	:WO 2020/055729
(61) Patent of Addition to Application Number	:NA
Filing Date	:NA
(62) Divisional to Application Number	:NA
Filing Date	:NA

(71)**Name of Applicant :**
1)GENERAL ELECTRIC COMPANY
Address of Applicant :1 River Road Schenectady, New York 12345 U.S.A.
(72)**Name of Inventor :**
1)CHACON, Joseph Lawrence
2)HERR, Stefan

(57) Abstract :
An energy audit tool (300) for a wind turbine power system (200) includes a data collector module (302) configured for temporary connection to an existing turbine controller (202) of the existing wind turbine power system (200). The data collector module (302) is configured to collect operating data (305) of the existing wind turbine power system (200). The energy audit tool (300) also includes a model simulator module (304) configured for analyzing the collected operating data (305), generating a model (306) of the existing wind turbine power system (200) based on the collected operating data (305), and determining an energy loss of the existing wind turbine power system (200) from the model (306) of the existing wind turbine power system.

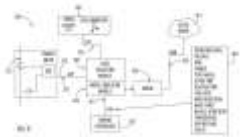

No. of Pages : 14 No. of Claims : 15

(12) PATENT APPLICATION PUBLICATION
(21) Application No.202127007402 A
(19) INDIA
(22) Date of filing of Application :22/02/2021
(43) Publication Date : 02/07/2021

(54) Title of the invention : OUTDOOR UNIT FOR AIR CONDITIONER

(51) International classification	:H02M0001000000, F04D0025160000, F24F0001220000, F24F0001200000, G06F0001200000	(71)**Name of Applicant :** **1)MITSUBISHI ELECTRIC CORPORATION** Address of Applicant :7-3, Marunouchi 2-chome, Chiyoda-ku, Tokyo 1008310 Japan (72)**Name of Inventor :** **1)OTORII, Yu**
(31) Priority Document No	:NA	
(32) Priority Date	:NA	
(33) Name of priority country	:NA	
(86) International Application No	:PCT/JP2018/032754	
Filing Date	:04/09/2018	
(87) International Publication No	:WO 2020/049633	
(61) Patent of Addition to Application Number	:NA	
Filing Date	:NA	
(62) Divisional to Application Number	:NA	
Filing Date	:NA	

(57) Abstract :
An outdoor unit (90), provided with: two fan motors (8a, 8b) for respectively driving two outdoor fans (7a, 7b) arranged vertically next to each other; a control device (16) having a fan motor electrical power supply unit capable of independently supplying electrical power to each of the two fan motors (8a, 8b) connected to two fan motor connection parts (15a, 15b); and an electrical component temperature sensor (17), which is installed in an electrical component box (40) surrounding the control device (16) and which measures the temperature of an electrical component. The control device (16) is provided with a controller which, during single-fan operation: makes a comparison between the temperature of the electrical component at the start of the single-fan operation and the temperature of the electrical component after a set time has elapsed from the start of the single-fan operation, and thereby senses which of the two fan motor connection parts (15a, 15b) each of the two fan motors (8a, 8b) is connected to; and supplies, on the basis of the sensing result, electrical power so as to drive the outdoor fan (7a, 7b) disposed on the upper side.

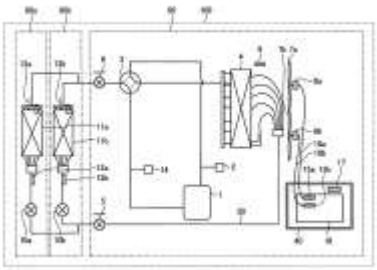

No. of Pages : 19 No. of Claims : 2

(12) PATENT APPLICATION PUBLICATION
(19) INDIA
(22) Date of filing of Application :22/02/2021

(21) Application No.202127007404 A
(43) Publication Date : 02/07/2021

(54) Title of the invention : USE OF LC-MS/MS TO QUANTITATE PROTEIN BIOMARKERS

(51) International classification	:G01N0033680000, G01N0033569000, C12Q0001680000, C12Q0001685100, C12N0015100000
(31) Priority Document No	:62/715973
(32) Priority Date	:08/08/2018
(33) Name of priority country	:U.S.A.
(86) International Application No	:PCT/US2019/045494
Filing Date	:07/08/2019
(87) International Publication No	:WO 2020/033537
(61) Patent of Addition to Application Number	:NA
Filing Date	:NA
(62) Divisional to Application Number	:NA
Filing Date	:NA

(71)**Name of Applicant :**
1)REGENERON PHARMACEUTICALS, INC.
Address of Applicant :777 Old Saw Mill River Road Tarrytown, New York 10591 U.S.A.
(72)**Name of Inventor :**
1)E, Sook Yen
2)QIU, Haibo
3)LI, Ning

(57) Abstract :
The present disclosure provides methods and compositions for the determining the abundance and/or concentration of protein biomarkers in a biological sample.

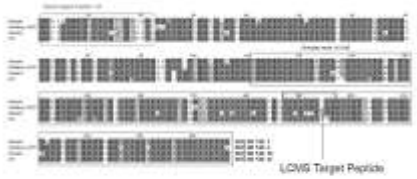

No. of Pages : 38 No. of Claims : 15

(12) PATENT APPLICATION PUBLICATION
(21) Application No.202127007405 A
(19) INDIA
(22) Date of filing of Application :22/02/2021
(43) Publication Date : 02/07/2021

(54) Title of the invention : RANDOM ACCESS METHOD AND APPARATUS, NETWORK DEVICE, AND TERMINAL

(51) International classification	:H04W0074080000, H04W0072040000, H04W0088020000, H04W0048160000, H04W0074040000
(31) Priority Document No	:NA
(32) Priority Date	:NA
(33) Name of priority country	:NA
(86) International Application No	:PCT/CN2018/106941
Filing Date	:21/09/2018
(87) International Publication No	:WO 2020/056721
(61) Patent of Addition to Application Number	:NA
Filing Date	:NA
(62) Divisional to Application Number	:NA
Filing Date	:NA

(71)**Name of Applicant :**
1)GUANGDONG OPPO MOBILE TELECOMMUNICATIONS CORP., LTD.
Address of Applicant :No.18 Haibin Road, Wusha,Chang' an, Dongguan, Guangdong 523860 China
(72)**Name of Inventor :**
1)WANG, Shukun

(57) Abstract :
The embodiments of the present application provide a random access method and apparatus, a network device, and a terminal. Said method comprises: a network device sending first configuration information corresponding to a preamble and second configuration information corresponding to a PRACH resource; the network device receiving MSG1, and determining the format of an RAR on the basis of at least one of: the preamble corresponding to the MSG1, a PRACH resource corresponding to the MSG1, and whether MSG3 is detected within a first time range; and the network device sending MSG2 on the basis of the format of the RAR.

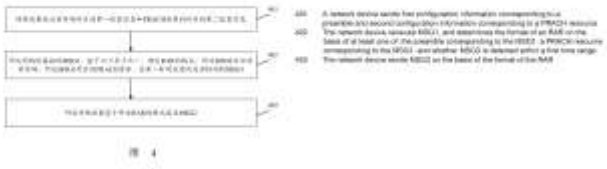

No. of Pages : 25 No. of Claims : 15

(12) PATENT APPLICATION PUBLICATION
(19) INDIA
(22) Date of filing of Application :22/02/2021

(21) Application No.202127007406 A
(43) Publication Date : 02/07/2021

(54) Title of the invention : STEEL SHEET AND MANUFACTURING METHOD THEREFOR

(51) International classification	:C22C0038000000, C21D0009460000, C22C0038060000, C22C0038040000, C22C0038020000	(71)**Name of Applicant :** **1)JFE STEEL CORPORATION** Address of Applicant :2-3, Uchisaiwai-cho 2-chome, Chiyoda-ku, Tokyo 1000011 Japan
(31) Priority Document No	:2018-196829	(72)**Name of Inventor :** **1)ONO Yoshihiko**
(32) Priority Date	:18/10/2018	**2)TAKASHIMA Katsutoshi**
(33) Name of priority country	:Japan	**3)TOBATA Junya**
(86) International Application No	:PCT/JP2019/040682	**4)MATSUI Yoichiro**
Filing Date	:16/10/2019	
(87) International Publication No	:WO 2020/080407	
(61) Patent of Addition to Application Number	:NA	
Filing Date	:NA	
(62) Divisional to Application Number	:NA	
Filing Date	:NA	

(57) Abstract :
Provided are a steel sheet and a manufacturing method therefor. The present invention provides a steel sheet having a specific component composition and a steel structure wherein: in terms of area ratio, 6-90% of ferrite and 10-94% of a structure comprising one or two or more of upper bainite, fresh martensite, tempered martensite, lower bainite, and residual are contained; in terms of volume ratio, 3-15% of residual is contained; the total area ratio SC-concentrated of a region serving as the upper bainite that has a C concentration of 0.6-1.3% and an adjacent region of which has a minor axis width of 0.7-10 μm, an aspect ratio of > 2.0, and a C concentration of 0.07% or less is 0.1-5%; the total area ratio SBlock of fresh martensite having a circle-equivalent particle diameter of 1.5-15 μm and an aspect ratio of 3 or less and/or residual particles having a circle-equivalent particle diameter of 1.5-15 μm and an aspect ratio of 3 or less is 5% or less (including 0%); and the prior grain size in a surface layer is 2-12 μm.

No. of Pages : 76 No. of Claims : 7

(12) PATENT APPLICATION PUBLICATION
(19) INDIA
(22) Date of filing of Application :22/02/2021

(21) Application No.202127007407 A
(43) Publication Date : 02/07/2021

(54) Title of the invention : RANDOM ACCESS METHOD AND RELATED DEVICE

(51) International classification	:H04W0074080000, H04W0074000000, H04W0028040000, H04W0048080000, H04B0007080000
(31) Priority Document No	:201810852639.0
(32) Priority Date	:30/07/2018
(33) Name of priority country	:China
(86) International Application No	:PCT/CN2019/082138
Filing Date	:10/04/2019
(87) International Publication No	:WO 2020/024616
(61) Patent of Addition to Application Number	:NA
Filing Date	:NA
(62) Divisional to Application Number	:NA
Filing Date	:NA

(71)**Name of Applicant :**
1)GUANGDONG OPPO MOBILE TELECOMMUNICATIONS CORP., LTD.
Address of Applicant :No. 18, Haibin Road, Wusha, Chang'an Dongguan, Guangdong 523860 China
(72)**Name of Inventor :**
1)SHI, Cong
2)WANG, Shukun
3)YANG, Ning
4)LU, Qianxi
5)YOU, Xin

(57) Abstract :
Provided in the embodiments of the present application are a random access method and related device, which allow a terminal device to determine whether a received random access response is a random access response therefor. Said method comprises: receiving a random access response message sent from a network side; on the basis of indication information in the random access response message, determining whether a random access response in the random access response message is for a terminal device, wherein the indication information at least may indicate different types of random access responses or may indicate different types of random access processes.

No. of Pages : 42 No. of Claims : 10

(12) PATENT APPLICATION PUBLICATION
(19) INDIA
(22) Date of filing of Application :22/02/2021

(21) Application No.202127007435 A
(43) Publication Date : 02/07/2021

(54) Title of the invention : AUTOMATED PLANT GROWING SYSTEM

(51) International classification	:A01G0007040000, A01G0031020000, A01G0009260000, A01G0009240000, A01G0009020000
(31) Priority Document No	:62/701908
(32) Priority Date	:23/07/2018
(33) Name of priority country	:U.S.A.
(86) International Application No	:PCT/US2019/043024
Filing Date	:23/07/2019
(87) International Publication No	:WO 2020/023504
(61) Patent of Addition to Application Number	:NA
Filing Date	:NA
(62) Divisional to Application Number	:NA
Filing Date	:NA

(71)**Name of Applicant :**
1)HELIPONIX, LLC
Address of Applicant :800 South Saint James Boulevard Evansville, IN 47714 U.S.A.
(72)**Name of Inventor :**
1)MASSEY, Scott
2)BALL, Ivan

(57) Abstract :
A system for providing a growth environment for a plant positioned in an automated plant growing system is disclosed. Light sources with each light source positioned in the automated plant growing system to expose the plant to the light sources and to generate light to trigger photosynthesis in the plant. A controller that monitors a growth parameters associated with the plant to determine whether the growth parameters deviate beyond a corresponding growth threshold. Each of the growth parameters provides an indicator as to a growth status of the plant and the growth status of the plant decreases when the growth parameters deviate beyond the corresponding growth threshold. The controller automatically adjusts an environmental parameter when the growth parameters deviate beyond the growth thresholds. Each of the environmental parameters impact the growth environment of the plant positioned in the automated plant growing system.

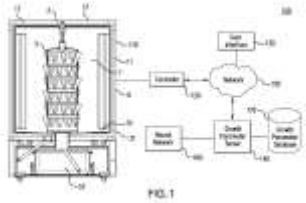

No. of Pages : 42 No. of Claims : 15

(12) PATENT APPLICATION PUBLICATION
(19) INDIA
(22) Date of filing of Application :22/02/2021

(21) Application No.202127007444 A
(43) Publication Date : 02/07/2021

(54) Title of the invention : DEVICE FOR SEPARATING SOLID MATERIALS OUT OF LIQUIDS AND GASES

(51) International classification	:B01D0029150000, B01D0029520000, B01D0029820000, B01D0029940000, B01D0029050000
(31) Priority Document No	:00902/18
(32) Priority Date	:23/07/2018
(33) Name of priority country	:Switzerland
(86) International Application No	:PCT/IB2019/055670
Filing Date	:03/07/2019
(87) International Publication No	:WO 2020/021363
(61) Patent of Addition to Application Number	:NA
Filing Date	:NA
(62) Divisional to Application Number	:NA
Filing Date	:NA

(71)**Name of Applicant :**
1)DRM, DR. MLLER AG
Address of Applicant :Alte Landstrasse 415 8708 Mnnedorf Switzerland
(72)**Name of Inventor :**
1)WETTER, Kevin
2)MLLER, Patrick

(57) Abstract :
The invention relates to a device for separating solid materials out of liquids or gases and for discharging solid material. The device comprises a pressurised container (1) and at least one filter element (10), the at least one filter element (10) being arranged in a flexible container (8) which is arranged in the pressurised container (1) and is sealed tightly relative thereto. The pressurised container (1) comprises at least one outlet (6) for discharging the solid material and the flexible container (8) comprises at least one discharge connection (14), the discharge connection (14) of the flexible container (8) being guided through the outlet (6) of the pressurised container (1) and sealed tightly relative to the pressurised container (1). In this case the outlet (6) and the discharge connection (14) of the flexible container (8) can be closed and sealed by means of a closure mechanism (7, 7', 7") relative to the environment (3) outside the flexible container (8) and the pressurised container (1).

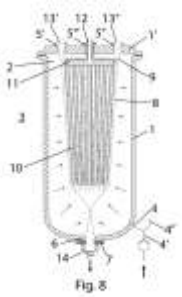

No. of Pages : 19 No. of Claims : 17

(12) PATENT APPLICATION PUBLICATION
(19) INDIA
(22) Date of filing of Application :23/02/2021

(21) Application No.202127007509 A
(43) Publication Date : 02/07/2021

(54) Title of the invention : METHOD AND DEVICE FOR VIDEO SIGNAL IDENTIFICATION, ELECTRONIC DEVICE, AND READABLE STORAGE MEDIUM

(51) International classification	:H04W0008100000, H04N0013139000, H04N0021835000, H04N0005120000, H04N0021440200
(31) Priority Document No	:201810827466.7
(32) Priority Date	:25/07/2018
(33) Name of priority country	:China
(86) International Application No	:PCT/CN2019/097274
Filing Date	:23/07/2019
(87) International Publication No	:WO 2020/020149
(61) Patent of Addition to Application Number	:NA
Filing Date	:NA
(62) Divisional to Application Number	:NA
Filing Date	:NA

(71)**Name of Applicant :**
1)HANGZHOU HIKVISION DIGITAL TECHNOLOGY CO., LTD.
Address of Applicant :No.555 Qianmo Road, Binjiang District Hangzhou, Zhejiang 310051 China
(72)**Name of Inventor :**
1)ZHANG, Hailong
2)WANG, Jun
3)MA, Qiang

(57) Abstract :
A method and device for video signal identification, an electronic device, and a storage medium. The method comprises: reading a first register to obtain a format value of a received video signal (S100); when the format value is shared by target video signals of various formats, configuring a second register according to the format of at least one target video signal of the various formats, and detecting whether the received video signal is in a locked state (S110); and, when the second register is configured according to a first target format and the received video signal is detected to be in the locked state, determining that the format of the received signal is the first target format (S120).

No. of Pages : 44 No. of Claims : 15

(12) PATENT APPLICATION PUBLICATION
(19) INDIA
(22) Date of filing of Application :23/02/2021

(21) Application No.202127007530 A
(43) Publication Date : 02/07/2021

(54) Title of the invention : DEVICE AND METHOD FOR HEATING A FLUID IN A PIPELINE

(51) International classification	:H05B0006100000, F24H0001100000, A61N0002020000, H05B0003400000, C10G0009240000	(71)**Name of Applicant :** **1)BASF SE** Address of Applicant :Carl-Bosch-Str. 38 67056 Ludwigshafen am Rhein Germany (72)**Name of Inventor :** **1)WECK, Alexander** **2)LAIB, Heinrich**
(31) Priority Document No	:18189369.4	
(32) Priority Date	:16/08/2018	
(33) Name of priority country	:EPO	
(86) International Application No	:PCT/EP2019/071970	
Filing Date	:15/08/2019	
(87) International Publication No	:WO 2020/035574	
(61) Patent of Addition to Application Number	:NA	
Filing Date	:NA	
(62) Divisional to Application Number	:NA	
Filing Date	:NA	

(57) Abstract :
The invention relates to a device (112) for heating a fluid. The device (112) comprises: at least one electrically conductive pipeline (120) for receiving the fluid; at least one electrically conductive coil (110); at least one alternating voltage source (114), which is connected to the coil (110) and is designed to apply an alternating voltage to the coil (110). The coil (110) is designed to generate at least one electromagnetic field as a result of the application of the alternating voltage. The pipeline (120) and the coil (110) are arranged in such a way that the electromagnetic field of the coil (110) induces an electric current in the pipeline (120), which electric current heats the pipeline (120) by Joule heat in order to heat the fluid, which Joule heat arises as the electric current passes through conductive pipe material.

FIG.3B

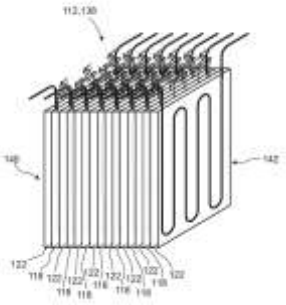

No. of Pages : 19 No. of Claims : 15

(12) PATENT APPLICATION PUBLICATION
(21) Application No.202127007531 A
(19) INDIA
(22) Date of filing of Application :23/02/2021
(43) Publication Date : 02/07/2021

(54) Title of the invention : DEVICE AND METHOD FOR HEATING A FLUID IN A PIPELINE BY MEANS OF DIRECT CURRENT

(51) International classification	:F16L0053370000, F24H0001100000, F24H0009180000, H05B0003400000, C10G0009240000	(71)**Name of Applicant :** **1)BASF SE** Address of Applicant :Carl-Bosch-Str. 38 67056 Ludwigshafen am Rhein Germany
(31) Priority Document No	:18189370.2	(72)**Name of Inventor :**
(32) Priority Date	:16/08/2018	**1)KOCHENDOERFER, Kiara Aenne**
(33) Name of priority country	:EPO	**2)LAIB, Heinrich**
(86) International Application No	:PCT/EP2019/071972	**3)SHUSTOV, Andrey**
Filing Date	:15/08/2019	**4)KUEHN, Heinz-Juergen**
(87) International Publication No	:WO 2020/035575	**5)JENNE, Eric**
(61) Patent of Addition to Application Number	:NA	**6)JACOB, Reiner**
Filing Date	:NA	
(62) Divisional to Application Number	:NA	
Filing Date	:NA	

(57) Abstract :
The invention relates to a device (110) for heating a fluid. The device comprises: - at least one electrically conductive pipeline (112) and/or at least one electrically conductive pipeline segment (114) for receiving the fluid; and - at least one direct current and/or direct voltage source (126), wherein each pipeline (112) and/or each pipeline segment (114) is assigned a direct current and/or direct voltage source (126) which is connected to the pipeline (112) and/or to the pipeline segment (114). The direct current and/or direct voltage source (126) is designed to generate an electric current in the pipeline (112) and/or in the pipeline segment (114) which warms up the pipeline (112) and/or the pipeline segment (114) by Joule heat, which is created as the electric current passes through the conductive pipe material, to heat the fluid.

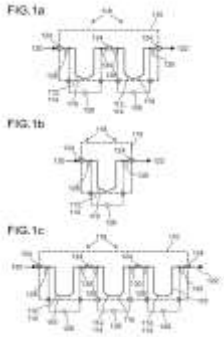

No. of Pages : 25 No. of Claims : 14

(12) PATENT APPLICATION PUBLICATION
(21) Application No.202127007537 A
(19) INDIA
(22) Date of filing of Application :23/02/2021
(43) Publication Date : 02/07/2021

(54) Title of the invention : A POLYISOCYANATE COMPOSITION, A POLYURETHANE FOAM OBTAINED THEREFROM AND USE THEREOF

(51) International classification	:C08G0101000000, C08G0018480000, C08G0018760000, C08G0018400000, D06M0015277000
(31) Priority Document No	:62/764928
(32) Priority Date	:16/08/2018
(33) Name of priority country	:U.S.A.
(86) International Application No	:PCT/EP2019/071282
Filing Date	:08/08/2019
(87) International Publication No	:WO 2020/035382
(61) Patent of Addition to Application Number	:NA
Filing Date	:NA
(62) Divisional to Application Number	:NA
Filing Date	:NA

(71)**Name of Applicant :**
1)BASF SE
Address of Applicant :Carl-Bosch-Strasse 38 67056 Ludwigshafen am Rhein Germany
(72)**Name of Inventor :**
1)SHTERN, David
2)KRUPA, Michael J

(57) Abstract :
The presently claimed invention relates to an isocyanate composition, a polyurethane foam obtained therefrom and use thereof in an article.

No. of Pages : 34 No. of Claims : 17

(12) PATENT APPLICATION PUBLICATION
(21) Application No.202127007538 A
(19) INDIA
(22) Date of filing of Application :23/02/2021
(43) Publication Date : 02/07/2021

(54) Title of the invention : METHOD FOR PRODUCING MENTHOL PARTICLES STABILIZED AGAINST CAKING, AND STORAGE-STABLE MENTHOL PARTICLES AND USE THEREOF

(51) International classification	:A61K0009000000, A61K0009160000, A61K0008810000, A61K0008340000, A61K0008020000
(31) Priority Document No	:EP18189338.9
(32) Priority Date	:16/08/2018
(33) Name of priority country	:EPO
(86) International Application No	:PCT/EP2019/071770
Filing Date	:14/08/2019
(87) International Publication No	:WO 2020/035515
(61) Patent of Addition to Application Number	:NA
Filing Date	:NA
(62) Divisional to Application Number	:NA
Filing Date	:NA

(71)**Name of Applicant :**
1)BASF SE
Address of Applicant :Carl-Bosch-Strasse 38 67056 Ludwigshafen am Rhein Germany
(72)**Name of Inventor :**
1)WLOCH, Sebastian
2)HEYDRICH, Gunnar
3)TEBBEN, Gerd
4)RAULS, Matthias

(57) Abstract :
The invention relates to a method for producing menthol particles stabilized against caking, characterized in that menthol particles, after being shaped, are stored for at least 7 days at a temperature of 0 to 30°C and subsequently a minimum amount of mechanical energy is fed to the menthol particles. The invention further relates to storage-stable menthol particles and to the use of said menthol particles in articles of use and consumption of all types.

No. of Pages : 34 No. of Claims : 23

(12) PATENT APPLICATION PUBLICATION
(19) INDIA
(22) Date of filing of Application :23/02/2021
(21) Application No.202127007549 A
(43) Publication Date : 02/07/2021

(54) Title of the invention : SYSTEMS AND METHODS FOR PERSONAL VERIFICATION FOR AUTONOMOUS VEHICLE DELIVERIES

(51) International classification	:B60R0019180000, G07F0017120000, G05D0001000000, B60H0001000000, A47J0037060000
(31) Priority Document No	:PCT/US2018/044361
(32) Priority Date	:30/07/2018
(33) Name of priority country	:U.S.A.
(86) International Application No	:PCT/US2019/043893
Filing Date	:29/07/2019
(87) International Publication No	:WO 2020/028238
(61) Patent of Addition to Application Number	:NA
Filing Date	:NA
(62) Divisional to Application Number	:NA
Filing Date	:NA

(71)**Name of Applicant :**
1)NURO, INC.
Address of Applicant :1300 Terra Bella Avenue, Suite No. 100 Mountain View, California 94043 U.S.A.
(72)**Name of Inventor :**
1)FERGUSON, David
2)ZHU, Jiajun
3)RANSOHOFF, Nan

(57) Abstract :
In accordance with aspects of the present disclosure, an autonomous robot vehicle is disclosed. In various embodiments, the autonomous robot vehicle includes a conveyance system, a securable compartment configured to autonomously lock and unlock where the securable compartment contains an item for delivery to a particular individual, a personal identification reader, at least one processor, and a memory storing instructions. The instructions, when executed by the processor(s), cause the autonomous robot vehicle to, autonomously, travel to a destination location of the particular individual, capture by the personal identification reader at the destination location a personal identification object, determine that the captured personal identification object matches an identity of the particular individual, and unlock the securable compartment based on the determination.

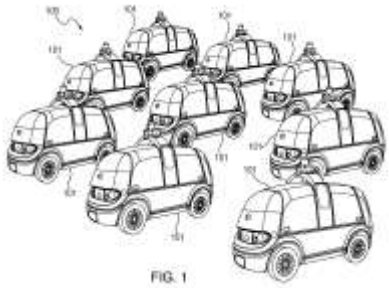

No. of Pages : 39 No. of Claims : 23

(12) PATENT APPLICATION PUBLICATION
(19) INDIA
(22) Date of filing of Application :23/02/2021

(21) Application No.202127007566 A
(43) Publication Date : 02/07/2021

(54) Title of the invention : AUTONOMOUS ROBOT VEHICLE WITH SECURABLE COMPARTMENTS

(51) International classification	:B60R0019180000, G01C0021340000, A23L0002520000, A47J0037060000, A23L0007109000
(31) Priority Document No	:PCT/US2018/044361
(32) Priority Date	:30/07/2018
(33) Name of priority country	:U.S.A.
(86) International Application No	:PCT/US2019/043887
Filing Date	:29/07/2019
(87) International Publication No	:WO 2020/028235
(61) Patent of Addition to Application Number	:NA
Filing Date	:NA
(62) Divisional to Application Number	:NA
Filing Date	:NA

(71)**Name of Applicant :**
1)NURO, INC.
Address of Applicant :1300 Terra Bella Avenue, Suite No. 100 Mountain View, California 94043 U.S.A.
(72)**Name of Inventor :**
1)FERGUSON, David
2)ZHU, Jiajun
3)JIRAPINYO, Pichayut
4)RANSOHOFF, Nan

(57) Abstract :
A system for a mobile secure locker in accordance with aspects of the present disclosure includes processor(s) and memory storing instructions. The instructions, when executed by the processor(s), cause the system to provide a user interface for a user to rent a mobile secure locker in an autonomous robot vehicle, receive information through the user interface from the user where the information includes a first destination, a second destination, and a time associated with the second destination, communicate instructions to the autonomous robot vehicle to travel to the first destination to receive the item, receive an indication from the autonomous robot vehicle that the item has been received, communicate instructions to the autonomous robot vehicle to travel to the second destination to deliver the item to the user at the time associated with the second destination, and receive from the autonomous robot vehicle an indication the item is retrieved.

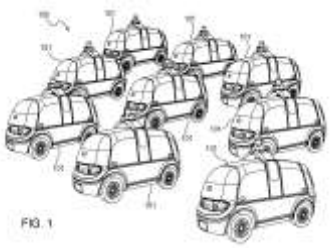

No. of Pages : 37 No. of Claims : 21

(12) PATENT APPLICATION PUBLICATION
(19) INDIA
(22) Date of filing of Application :23/02/2021
(21) Application No.202127007579 A
(43) Publication Date : 02/07/2021

(54) Title of the invention : COMPOSITION

(51) International classification	:C08K0005526000, C07F0009145000, A61K0009200000, C08K0005524000, A61K0009000000
(31) Priority Document No	:1812145.9
(32) Priority Date	:25/07/2018
(33) Name of priority country	:U.K.
(86) International Application No	:PCT/EP2019/070120
Filing Date	:25/07/2019
(87) International Publication No	:WO 2020/021042
(61) Patent of Addition to Application Number	:NA
Filing Date	:NA
(62) Divisional to Application Number	:NA
Filing Date	:NA

(71)**Name of Applicant :**
1)SI GROUP SWITZERLAND (CHAA) GMBH
Address of Applicant :Ksteliweg 7 4133 Pratteln Switzerland
(72)**Name of Inventor :**
1)HILL, Jonathan
2)POWER, Maurice
3)HOWELLS, Ian
4)BRASSINGTON, David, Steven

(57) Abstract :
The present invention concerns a stabilising antioxidative composition comprising tris(2-t-butylphenyl) phosphite in the absence of tris(2,4-di-t-butylphenyl) phosphite.

No. of Pages : 43 No. of Claims : 25

(12) PATENT APPLICATION PUBLICATION
(19) INDIA
(22) Date of filing of Application :23/02/2021

(21) Application No.202127007603 A
(43) Publication Date : 02/07/2021

(54) Title of the invention : PLAIN BEARING ELEMENT

(51) International classification	:F16C0033120000, A61B0005010000, H02G0015180000, F16H0003720000, F01N0011000000
(31) Priority Document No	:A50740/2018
(32) Priority Date	:29/08/2018
(33) Name of priority country	:Austria
(86) International Application No	:PCT/AT2019/060271
Filing Date	:26/08/2019
(87) International Publication No	:WO 2020/041808
(61) Patent of Addition to Application Number	:NA
Filing Date	:NA
(62) Divisional to Application Number	:NA
Filing Date	:NA

(71)**Name of Applicant :**
1)MIBA GLEITLAGER AUSTRIA GMBH
Address of Applicant :Dr. Mitterbauer-Strae 3 4663 Laakirchen Austria
(72)**Name of Inventor :**
1)HAMDARD, Kamal

(57) Abstract :
The invention relates to a plain bearing element (1), comprising a first layer (2) having a radially inner surface. A measuring device (3) is arranged on the radially inner surface of the first layer (2). The measuring device has, in the order indicated, a first electrical insulation layer (5), a sensor layer (6) and a second electrical insulation layer (7). A sliding layer (4) is arranged on the second electrical insulation layer (7).

Fig.1

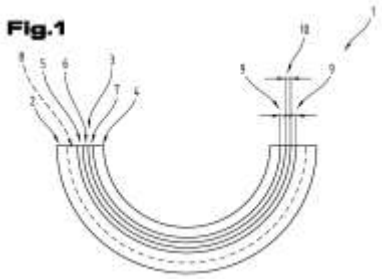

No. of Pages : 21 No. of Claims : 22

(12) PATENT APPLICATION PUBLICATION
(21) Application No.202127007604 A
(19) INDIA
(22) Date of filing of Application :23/02/2021
(43) Publication Date : 02/07/2021

(54) Title of the invention : HEAT TRANSFER DEVICE

(51) International classification	:F28D0015020000, F28D0015040000, F28D0020000000, B22F0005100000, F28D0021000000	(71)**Name of Applicant :** **1)MIBA EMOBILITY GMBH** Address of Applicant :Dr. Mitterbauer-Strae 3 4663 Laakirchen Austria
(31) Priority Document No	:A50737/2018	(72)**Name of Inventor :**
(32) Priority Date	:29/08/2018	**1)GAIGG, Stefan**
(33) Name of priority country	:Austria	**2)LIEBL, Martin**
(86) International Application No	:PCT/AT2019/060273	**3)P–HN, Franz**
Filing Date	:27/08/2019	
(87) International Publication No	:WO 2020/041810	
(61) Patent of Addition to Application Number	:NA	
Filing Date	:NA	
(62) Divisional to Application Number	:NA	
Filing Date	:NA	

(57) Abstract :
The invention relates to a heat transfer device (1) comprising a casing (4) that is closed on all sides, wherein the casing (4) defines a volume in which an insert element (3) or multiple insert elements (3) made of a sintered material is/are arranged to form at least one heat pipe, wherein at least one channel (2) for a heat transfer medium is formed in the sintered material, and the casing (4) is formed at least partially from a single- or multi-layer film (5, 6).

Fig.1

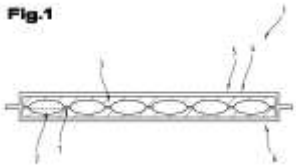

No. of Pages : 23 No. of Claims : 15

(12) PATENT APPLICATION PUBLICATION
(19) INDIA
(22) Date of filing of Application :23/02/2021

(21) Application No.202127007605 A
(43) Publication Date : 02/07/2021

(54) Title of the invention : METHOD FOR INDICATING STOPPING OF TRANSMISSION, TERMINAL DEVICE, NETWORK DEVICE AND STORAGE MEDIUM

(51) International classification	:H04L0005000000, H04W0072040000, H04W0048120000, H04N0021647000, H04L0012863000
(31) Priority Document No	:NA
(32) Priority Date	:NA
(33) Name of priority country	:NA
(86) International Application No	:PCT/CN2018/103486
Filing Date	:31/08/2018
(87) International Publication No	:WO 2020/042142
(61) Patent of Addition to Application Number	:NA
Filing Date	:NA
(62) Divisional to Application Number	:NA
Filing Date	:NA

(71)**Name of Applicant :**
1)GUANGDONG OPPO MOBILE TELECOMMUNICATIONS CORP., LTD.
Address of Applicant :No. 18 Haibin Road, Wusha, Chang'an, Dongguan, Guangdong 523860 China
(72)**Name of Inventor :**
1)TANG, Hai

(57) Abstract :
Disclosed is a method for indicating the stopping of transmission. The method comprises: a terminal device acquiring configuration information of a transmission stopping indicator, and the terminal device receiving transmission stopping indicator information on the basis of the configuration information, wherein the transmission stopping indicator information is used for indicating that the terminal device stops data transmission. Further disclosed are another method for indicating the stopping of transmission, a terminal device, a network device and a storage medium.

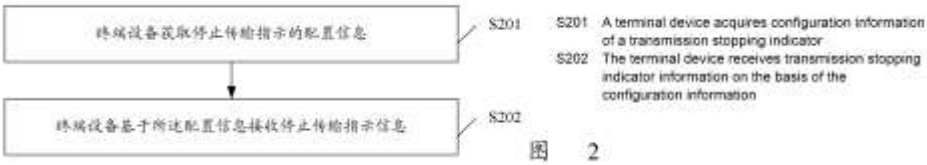

图 2

No. of Pages : 18 No. of Claims : 22

(12) PATENT APPLICATION PUBLICATION
(19) INDIA
(22) Date of filing of Application :23/02/2021

(21) Application No.202127007620 A
(43) Publication Date : 02/07/2021

(54) Title of the invention : ABSORBENT ARTICLE

(51) International classification	:A61F0013533000, A61F0013475000, A61F0013530000, A61F0013150000, A61F0013536000
(31) Priority Document No	:2018-168933
(32) Priority Date	:10/09/2018
(33) Name of priority country	:Japan
(86) International Application No	:PCT/JP2019/035224
Filing Date	:06/09/2019
(87) International Publication No	:WO 2020/054623
(61) Patent of Addition to Application Number	:NA
Filing Date	:NA
(62) Divisional to Application Number	:NA
Filing Date	:NA

(71)**Name of Applicant :**
1)UNICHARM CORPORATION
Address of Applicant :182, Shimobun, Kinsei-cho, Shikokuchuo-shi, Ehime 7990111 Japan
(72)**Name of Inventor :**
1)WATABE, Yoshihisa
2)NAKASHIMA, Hiroshi

(57) Abstract :
Provided is an absorbent article (10) capable of imparting a sensation that an absorber (40) feels soft. The absorbent article (10) according to one embodiment of the present invention has an absorber (40) and a compressed portion (80) where the absorber (40) is compressed. In the area where the compressed portion (80) is not formed, the absorber has a Young's modulus of 3.1-4.5 kPa in the thickness direction (T).

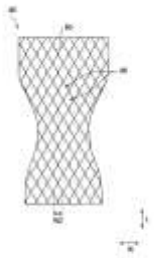

No. of Pages : 18 No. of Claims : 9

(12) PATENT APPLICATION PUBLICATION
(19) INDIA
(22) Date of filing of Application :23/02/2021

(21) Application No.202127007621 A
(43) Publication Date : 02/07/2021

(54) Title of the invention : SLIDING BEARING ASSEMBLY

(51) International classification	:F16C0041000000, A61F0002320000, F16C0019520000, F03D0009000000, A61F0002340000
(31) Priority Document No	:A50741/2018
(32) Priority Date	:29/08/2018
(33) Name of priority country	:Austria
(86) International Application No	:PCT/AT2019/060272
Filing Date	:26/08/2019
(87) International Publication No	:WO 2020/041809
(61) Patent of Addition to Application Number	:NA
Filing Date	:NA
(62) Divisional to Application Number	:NA
Filing Date	:NA

(71)**Name of Applicant :**
1)MIBA GLEITLAGER AUSTRIA GMBH
Address of Applicant :Dr. Mitterbauer-Strae 3 4663 Laakirchen Austria
(72)**Name of Inventor :**
1)HAGER, Gunther
2)HAMDARD, Kamal
3)SCHALLMEINER, Stefan

(57) Abstract :
The invention relates to a sliding bearing assembly (1) comprising at least one sliding bearing element (2) which is situated in a bearing socket (3), the bearing socket (3) being part of a bearing structure, and the bearing structure having at least one sensor (5) which is connected: to a data transfer device (6) for the transfer of data, in particular wirelessly, to a receiver of the data; and to an energy generation device (7) for the autonomous supply of electrical energy to the sensor (5) and/or the data transfer device (6). The energy generation device (7) has at least one piezo element (8) which is compressively preloaded, or the energy generation device (7) is the sensor (5).

Fig.1

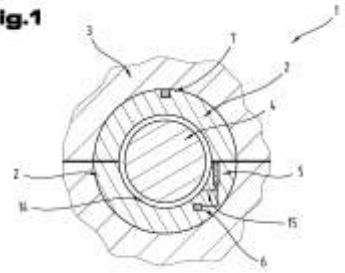

No. of Pages : 15 No. of Claims : 8

(12) PATENT APPLICATION PUBLICATION
(19) INDIA
(22) Date of filing of Application :23/02/2021
(21) Application No.202127007639 A
(43) Publication Date : 02/07/2021

(54) Title of the invention : ARRANGEMENTS AND METHODS IN THE PREPARATION OF THE PROXIMAL SURFACE OF THE TIBIA AND/OR FEMUR AND POSTERIOR FEMORAL CONDYLE PROXIMAL SURFACES FOR THE COMPONENTS OF A PROSTHETIC KNEE JOINT

(51) International classification	:A61F0002380000, A61F0002300000, A61B0017150000, A61B0017170000, A61F0002460000
(31) Priority Document No	:2018903218
(32) Priority Date	:31/08/2018
(33) Name of priority country	:Australia
(86) International Application No	:PCT/AU2019/050922
Filing Date	:30/08/2019
(87) International Publication No	:WO 2020/041839
(61) Patent of Addition to Application Number	:NA
Filing Date	:NA
(62) Divisional to Application Number	:NA
Filing Date	:NA

(71)**Name of Applicant :**
1)CABOT, Jonathan Peter
Address of Applicant :1 Kermode Street North Adelaide, South Australia 5006 Australia
(72)**Name of Inventor :**
1)CABOT, Jonathan Peter

(57) Abstract :
An arrangement for the preparation of the proximal surface of the tibia and/or the proximal surface of the distal end of the femur and the posterior femoral condyle for a tibia component and/or a femoral component of a prosthetic knee joint. The arrangement includes an electronic system arrangement that receives or measures data information to which the electronic system can utilise this information to communicate control of a blade and/or cutting implement to resect the proximal surface of the tibia and/or distal end of the femur and/or the posterior femoral condyle to required reference plane cuts that provide for balanced angular movement between the femoral component and the tibia component of the prosthetic knee joint throughout an arc of motion from extension, mid-flexion and flexion.

No. of Pages : 19 No. of Claims : 11

(12) PATENT APPLICATION PUBLICATION
(21) Application No.202127007643 A
(19) INDIA
(22) Date of filing of Application :23/02/2021
(43) Publication Date : 02/07/2021

(54) Title of the invention : INTERNAL GEAR PUMP

(51) International classification	:F04C0002100000, F04C0015000000, F02M0055000000, F02N0015040000, F02N0015020000	(71)**Name of Applicant :** **1)SUMITOMO PRECISION PRODUCTS CO., LTD.** Address of Applicant :1-10, Fuso-cho, Amagasaki-shi, Hyogo 6600891 Japan
(31) Priority Document No	:NA	(72)**Name of Inventor :** **1)YOSHIDA Kei**
(32) Priority Date	:NA	
(33) Name of priority country	:NA	
(86) International Application No	:PCT/JP2018/043438	
Filing Date	:26/11/2018	
(87) International Publication No	:WO 2020/110180	
(61) Patent of Addition to Application Number	:NA	
Filing Date	:NA	
(62) Divisional to Application Number	:NA	
Filing Date	:NA	

(57) Abstract :
An internal gear pump (1) is provided with: a pinion gear (3); a ring gear (4); a crescent (54); a housing (5) with a slide surface (51) on which an outer peripheral surface (41) of the ring gear slides; a high-pressure oil supply portion (8) which has an inlet (81) opening on the slide surface and supplies a high-pressure operating oil; and a recess (9) provided in the slide surface so as to increase the interval between the outer peripheral surface of the ring gear and the slide surface. The inlet is located in a pressure-increasing region, and the recess is located in a high-pressure region.

No. of Pages : 26 No. of Claims : 5

(12) PATENT APPLICATION PUBLICATION
(19) INDIA
(22) Date of filing of Application :23/02/2021

(21) Application No.202127007646 A
(43) Publication Date : 02/07/2021

(54) Title of the invention : VERTICAL MEMBER FOR A VEHICLE RESTRAINT SYSTEM

(51) International classification	:E01F0015040000, B32B0003300000, E04C0005070000, E04G0001140000, B29K0077000000
(31) Priority Document No	:A 50645/2018
(32) Priority Date	:24/07/2018
(33) Name of priority country	:Austria
(86) International Application No	:PCT/EP2019/069695
Filing Date	:22/07/2019
(87) International Publication No	:WO 2020/020833
(61) Patent of Addition to Application Number	:NA
Filing Date	:NA
(62) Divisional to Application Number	:NA
Filing Date	:NA

(71)**Name of Applicant :**
1)DELTA BLOC INTERNATIONAL GMBH
Address of Applicant :Kirchdorfer Platz 1 2752 Wllersdorf-Steinabr¼ckl Austria
(72)**Name of Inventor :**
1)EDL, Thomas
2)LEHMANN, Steffen

(57) Abstract :
Disclosed is a vertical member (1) for a vehicle restraint system (2), said vertical member (1) being intended for attaching a guard rail (4) of the vehicle restraint system (2). According to the invention, the vertical member (1) comprises a profiled support (5) and a reinforcing support (6) within the profiled support (5), and the longitudinal axis of the reinforcing support (6) runs substantially parallel to the longitudinal axis of the profiled support (5).

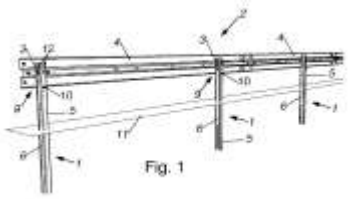
Fig. 1

No. of Pages : 12 No. of Claims : 12

(12) PATENT APPLICATION PUBLICATION
(19) INDIA
(22) Date of filing of Application :24/02/2021

(21) Application No.202127007677 A
(43) Publication Date : 02/07/2021

(54) Title of the invention : ADVANCED NOX REDUCTION CATALYSTS

(51) International classification	:F01N0003200000, B01D0053940000, B01J0037020000, B01J0029760000, B01J0035040000	(71)**Name of Applicant :** **1)BASF CORPORATION** Address of Applicant :100 Park Avenue Florham Park, New Jersey 07932 U.S.A.
(31) Priority Document No	:62/721409	(72)**Name of Inventor :** **1)LI, Yuejin**
(32) Priority Date	:22/08/2018	
(33) Name of priority country	:U.S.A.	
(86) International Application No	:PCT/US2019/044014	
Filing Date	:30/07/2019	
(87) International Publication No	:WO 2020/040944	
(61) Patent of Addition to Application Number	:NA	
Filing Date	:NA	
(62) Divisional to Application Number	:NA	
Filing Date	:NA	

(57) Abstract :
A selective catalytic reduction (SCR) catalyst composition effective in the abatement of nitrogen oxides (NOx) is provided. The SCR catalyst composition significantly increases the conversion of NOx relative to a Cu-chabazite reference catalyst composition at any temperature, and especially at low temperatures. A catalyst article, an exhaust gas treatment system, and a method of treating an exhaust gas stream, each including the SCR catalyst composition of the invention, are also provided. The SCR catalyst composition is particularly useful for treatment of exhaust from a lean-burn engine.

Fig. 2a

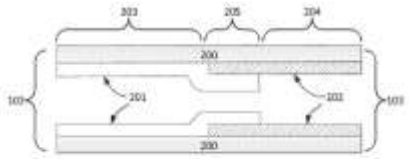

No. of Pages : 36 No. of Claims : 36

(12) PATENT APPLICATION PUBLICATION
(21) Application No.202127007678 A
(19) INDIA
(22) Date of filing of Application :24/02/2021
(43) Publication Date : 02/07/2021

(54) Title of the invention : STABILIZED ROTOMOLDED POLYOLEFIN

(51) International classification	:C08K0005349200, C08K0005343500, C08K0005000000, C08K0005533300, B29C0041040000	(71)**Name of Applicant :** **1)BASF SE** Address of Applicant :Carl Bosch Strasse 38 67056 Ludwigshafen am Rhein Germany (72)**Name of Inventor :** **1)SIGLER, John**
(31) Priority Document No	:62/721286	
(32) Priority Date	:22/08/2018	
(33) Name of priority country	:U.S.A.	
(86) International Application No	:PCT/US2019/047034	
Filing Date	:19/08/2019	
(87) International Publication No	:WO 2020/041181	
(61) Patent of Addition to Application Number	:NA	
Filing Date	:NA	
(62) Divisional to Application Number	:NA	
Filing Date	:NA	

(57) Abstract :
Polyolefin hollow articles prepared via a rotomolding process are provided stability against the deleterious effects of heat, light and oxygen by incorporating therein a hindered amine light stabilizer, an ultraviolet light absorber and a thioether additive.

No. of Pages : 33 No. of Claims : 21

(12) PATENT APPLICATION PUBLICATION
(21) Application No.202127007680 A
(19) INDIA
(22) Date of filing of Application :24/02/2021
(43) Publication Date : 02/07/2021

(54) Title of the invention : SIGNAL TRANSMISSION METHOD AND APPARATUS, AND TERMINAL AND NETWORK SIDE DEVICE

(51) International classification	:H04L0005000000, H04W0072040000, H04W0024100000, H04W0072120000, H04L0001000000	(71)**Name of Applicant :** **1)DATANG MOBILE COMMUNICATIONS EQUIPMENT CO., LTD.** Address of Applicant :No.29 Xueyuan Rd., Haidian District, Beijing 100083 China
(31) Priority Document No	:201810942011.X	(72)**Name of Inventor :**
(32) Priority Date	:17/08/2018	**1)HUANG, Qiuping**
(33) Name of priority country	:China	**2)CHEN, Runhua**
(86) International Application No	:PCT/CN2019/100582	**3)GAO, Qiubin**
Filing Date	:14/08/2019	**4)SU, Xin**
(87) International Publication No	:WO 2020/034997	
(61) Patent of Addition to Application Number	:NA	
Filing Date	:NA	
(62) Divisional to Application Number	:NA	
Filing Date	:NA	

(57) Abstract :
Provided are a signal transmission method and apparatus, and a terminal and a network side device. The method comprises: receiving at least two groups of first indication information sent by a network side device, wherein each group of first indication information is used for indicating at least one first signal resource; and sending a first signal according to the indication of the at least two groups of first indication information, wherein the first signal includes a plurality of data layers, with each of the data layers of the first signal having a correlation with one group of first indication information.

No. of Pages : 59 No. of Claims : 17

(12) PATENT APPLICATION PUBLICATION
(19) INDIA
(22) Date of filing of Application :24/02/2021

(21) Application No.202127007684 A
(43) Publication Date : 02/07/2021

(54) Title of the invention : SYSTEM AND METHODS FOR RAPID ROUND-TRIP-TIME MEASUREMENT DISTRIBUTION

(51) International classification	:H04W0064000000, G01S0005020000, H04L0001180000, G01S0005140000, H04L0012260000
(31) Priority Document No	:62/742205
(32) Priority Date	:05/10/2018
(33) Name of priority country	:U.S.A.
(86) International Application No	:PCT/US2019/044274
Filing Date	:31/07/2019
(87) International Publication No	:WO 2020/072122
(61) Patent of Addition to Application Number	:NA
Filing Date	:NA
(62) Divisional to Application Number	:NA
Filing Date	:NA

(71)**Name of Applicant :**
1)QUALCOMM INCORPORATED
Address of Applicant :ATTN: International IP Administration 5775 Morehouse Drive San Diego, California 92121-1714 U.S.A.
(72)**Name of Inventor :**
1)OPSHAUG, Guttorm Ringstad
2)AKKARAKARAN, Sony
3)BHUSHAN, Naga
4)EDGE, Stephen William
5)FISCHER, Sven

(57) Abstract :
Disclosed are techniques for determining round-trip time (RTT) of a user equipment (UE). In an aspect, each gNodeB in a plurality of gNodeBs measure signaling data related to an uplink RTT reference signal received from the UE and the downlink RTT reference signal transmitted by each gNodeB. The signaling data comprises one of a processing delay between a time of arrival (TOA) of the uplink RTT reference signal and a time of transmission (TOT) of the downlink RTT reference signal or a total RTT between the TOT of the downlink RTT reference signal and the TOA of the uplink RTT reference signal. The signaling data is sent to a single entity, other than the UE, e.g., another gNodeB or a location server, where signaling data relevant to the UE is aggregated. The aggregated signaling data may be sent to the UE to determine the RTT for the UE or used by the location server to determine the RTT for the UE.

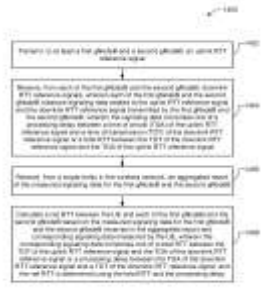

FIG. 14

No. of Pages : 86 No. of Claims : 32

(12) PATENT APPLICATION PUBLICATION
(21) Application No.202127007725 A
(19) INDIA
(22) Date of filing of Application :24/02/2021
(43) Publication Date : 02/07/2021

(54) Title of the invention : REDISTRIBUTION METHOD AND TERMINAL

(51) International classification	:H04W0076190000, H04W0076270000, H04W0076150000, G01R0019250000, H01L0023310000
(31) Priority Document No	:201810864515.4
(32) Priority Date	:01/08/2018
(33) Name of priority country	:China
(86) International Application No	:PCT/CN2019/096704
Filing Date	:19/07/2019
(87) International Publication No	:WO 2020/024812
(61) Patent of Addition to Application Number	:NA
Filing Date	:NA
(62) Divisional to Application Number	:NA
Filing Date	:NA

(71)**Name of Applicant :**
1)VIVO MOBILE COMMUNICATION CO., LTD.
Address of Applicant :#283, BBK Road, Wusha, Chang'an Dongguan, Guangdong 523860 China
(72)**Name of Inventor :**
1)BAO, Wei
2)YANG, Xiaodong

(57) Abstract :
Provided in the present disclosure is a redistribution method and terminal, which solve the problem of the transmission currently carried out by a UE needing to be stopped during the process of re-establishing an RRC connection. The processing method of the present disclosure comprises: when the wireless connection between a terminal and a master node (MN) is lost, reporting an MN wireless connection lost indication to a secondary node (SN); if an RRC redistribution message is received before a target timer times out, carrying out redistribution processing according to said RRC redistribution message.

No. of Pages : 23 No. of Claims : 16

(12) PATENT APPLICATION PUBLICATION
(21) Application No.202127007758 A
(19) INDIA
(22) Date of filing of Application :24/02/2021
(43) Publication Date : 02/07/2021

(54) Title of the invention : ADDITIVE COMPOSITION, POLYOLEFIN RESIN COMPOSITION CONTAINING SAME, METHOD FOR PRODUCING POLYOLEFIN RESIN COMPOSITION, AND MOLDED ARTICLES THEREOF

(51) International classification	:C08K0005527000, C08K0005000000, C07D0491040000, C08K0005523000, C08L0023120000
(31) Priority Document No	:2018-140920
(32) Priority Date	:27/07/2018
(33) Name of priority country	:Japan
(86) International Application No	:PCT/JP2019/028320
Filing Date	:18/07/2019
(87) International Publication No	:WO 2020/022189
(61) Patent of Addition to Application Number	:NA
Filing Date	:NA
(62) Divisional to Application Number	:NA
Filing Date	:NA

(71)**Name of Applicant :**
1)ADEKA CORPORATION
Address of Applicant :2-35, Higashiogu 7-chome, Arakawa-ku, Tokyo 1168554 Japan
(72)**Name of Inventor :**
1)YOKOYAMA Ryo
2)YOKOTA Yuri

(57) Abstract :
Provided are: an additive composition that provides an excellent extruder feed stability as a result of an excellent powder flowability, and that can impart an excellent transparency and mechanical properties to molded articles; a polyolefin resin composition that contains this additive composition; a method for producing a polyolefin resin composition; and molded articles thereof. The additive composition contains 1-[8-propyl-2,6-bis(4-propylphenyl)tetrahydro[1,3]dioxino[5,4-d]-1,3-dioxin-4-yl]ethane-1,2-diol (A) and an aromatic phosphate ester metal salt (B) represented by general formula (1) (in general formula (1), R1 to R4 each independently represent an alkyl group having 1 to 6 carbon atoms; n represents the number 1 or 2; when n is 1, M1 represents an alkali metal; and when n is 2, M1 represents hydroxyaluminum) wherein the mass ratio between (A) and (B) is within the range of (A)/(B) = 10/90-90/10.

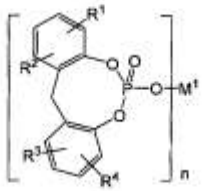

(1)

No. of Pages : 37 No. of Claims : 8

(12) PATENT APPLICATION PUBLICATION
(19) INDIA
(22) Date of filing of Application :24/02/2021

(21) Application No.202127007787 A
(43) Publication Date : 02/07/2021

(54) Title of the invention : CAPABILITY MANAGEMENT METHOD AND COMMUNICATION DEVICE

(51) International classification	:H04W0008240000, H04W0008220000, G10L0019018000, H04B0017290000, H04W0072020000
(31) Priority Document No	:201810867220.2
(32) Priority Date	:01/08/2018
(33) Name of priority country	:China
(86) International Application No	:PCT/CN2019/098552
Filing Date	:31/07/2019
(87) International Publication No	:WO 2020/024971
(61) Patent of Addition to Application Number	:NA
Filing Date	:NA
(62) Divisional to Application Number	:NA
Filing Date	:NA

(71)**Name of Applicant :**
1)VIVO MOBILE COMMUNICATION CO.,LTD.
Address of Applicant :#283, BBK Road, Wusha, Chang'an Dongguan, Guangdong 523860 China
(72)**Name of Inventor :**
1)KE, Xiaowan

(57) Abstract :
Provided are a capability management method and a communication device. The method is applied in a first communications device, and comprises: receiving information of a request for a terminal capability, the information containing first indication information indicating a requested terminal capability; and transmitting first related information associated with the terminal capability according to the first indication information.

图 1

No. of Pages : 43 No. of Claims : 21

(12) PATENT APPLICATION PUBLICATION
(19) INDIA
(22) Date of filing of Application :24/02/2021

(21) Application No.202127007788 A
(43) Publication Date : 02/07/2021

(54) Title of the invention : COMMUNICATION METHOD AND RELATED DEVICE

(51) International classification	:H04W0072040000, H04W0072100000, H04W0004460000, H04W0092180000, H04W0076140000	(71)**Name of Applicant :** **1)HUAWEI TECHNOLOGIES CO., LTD.** Address of Applicant :Huawei Administration Building, Bantian, Longgang District Shenzhen, Guangdong 518129 China
(31) Priority Document No	:201810969218.6	(72)**Name of Inventor :**
(32) Priority Date	:23/08/2018	**1)YOU, Chunhua**
(33) Name of priority country	:China	**2)FAN, Qiang**
(86) International Application No	:PCT/CN2019/100262	**3)PENG, Wenjie**
Filing Date	:12/08/2019	**4)WANG, Jun**
(87) International Publication No	:WO 2020/038250	**5)HUANG, Qufang**
(61) Patent of Addition to Application Number	:NA	**6)DAI, Mingzeng**
Filing Date	:NA	
(62) Divisional to Application Number	:NA	
Filing Date	:NA	

(57) Abstract :
The present application provides a communication method for data transmission for vehicle to X (V2X) and a related device. Said method comprises: a first terminal device receiving first information from a first radio access network device, the first information including service information concerning a service of the first terminal device and a resource configuration mode of a sidelink, there being a correlation between the service information and the resource configuration mode of the sidelink; and the first terminal device transmitting, on the basis of the correlation, data corresponding to the service information, on a transmission resource of the sidelink configured according to the resource configuration mode, the service information being reliability information. The implementation of said method is able to ensure the transmission of service data having a high reliability requirement, whilst balancing transmission reliability requirements on service data and transmission delay.

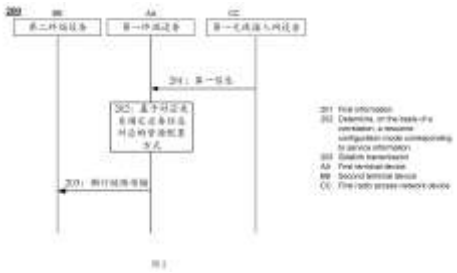

No. of Pages : 57 No. of Claims : 27

(12) PATENT APPLICATION PUBLICATION
(19) INDIA
(22) Date of filing of Application :24/02/2021

(21) Application No.202127007789 A
(43) Publication Date : 02/07/2021

(54) Title of the invention : A DECORATIVE HPL PANEL

(51) International classification	:B32B0027320000, H02S0020250000, H01L0031076000, H02S0020260000, H02S0040440000
(31) Priority Document No	:2021563
(32) Priority Date	:05/09/2018
(33) Name of priority country	:Netherlands
(86) International Application No	:PCT/NL2019/050558
Filing Date	:30/08/2019
(87) International Publication No	:WO 2020/050713
(61) Patent of Addition to Application Number	:NA
Filing Date	:NA
(62) Divisional to Application Number	:NA
Filing Date	:NA

(71)**Name of Applicant :**
1)TRESPA INTERNATIONAL B.V.
Address of Applicant :Wetering 20 6002 SM WEERT Netherlands
(72)**Name of Inventor :**
1)KJELLANDER, Birgitta Katarina Charlotte
2)K–MHOFF, Henricus Hubertus Maria

(57) Abstract :
The present invention relates to a decorative high pressure laminate (HPL) panel, comprising an outermost dcor layer and a core layer, wherein said panel further comprises at least one photovoltaic element for converting the energy of light into electricity by the photovoltaic effect, said at least one photovoltaic element is located between said outermost dcor layer and said core layer.

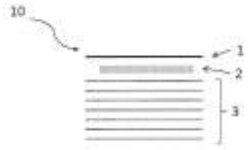

Fig. 1

No. of Pages : 26 No. of Claims : 27

(12) PATENT APPLICATION PUBLICATION
(19) INDIA
(22) Date of filing of Application :24/02/2021

(21) Application No.202127007811 A
(43) Publication Date : 02/07/2021

(54) Title of the invention : INFORMATION TRANSMISSION METHOD AND DEVICE, AND COMPUTER READABLE STORAGE MEDIUM

(51) International classification	:H04W0068000000, H04W0092240000, H04W0008220000, H04W0028020000, H04W0092200000
(31) Priority Document No	:201810820564.8
(32) Priority Date	:24/07/2018
(33) Name of priority country	:China
(86) International Application No	:PCT/CN2019/082486
Filing Date	:12/04/2019
(87) International Publication No	:WO 2020/019764
(61) Patent of Addition to Application Number	:NA
Filing Date	:NA
(62) Divisional to Application Number	:NA
Filing Date	:NA

(71)**Name of Applicant :**
1)ZTE CORPORATION
Address of Applicant :ZTE Plaza, Keji Road South Hi-Tech Industrial Park, Nanshan District Shenzhen, Guangdong 518057 China
(72)**Name of Inventor :**
1)XUE, Yan
2)YU, Guanghui
3)XIE, Feng
4)HUANG, Qiang

(57) Abstract :
Disclosed are an information transmission method and device, and a computer readable storage medium. The method comprises: an edge node sends a radio capability exposure request to a target transmission node at a radio access network side; the edge node receives radio capability exposure response information responded by the target transmission node. Specifically, the edge node sends the radio capability exposure request to the target transmission node at the radio access network side by means of an Xm interface, and receives the radio capability exposure response information responded by the target transmission node by means of the Xm interface or User Plane Functionality (UPF). In the solution of the present invention, the edge node can directly send the radio capability exposure request to the target transmission node at the radio access network side, and the target transmission node can also directly send the capability exposure response information to the edge node without the need of a core network, and thus better solving the problems in the related art that an information transfer delay exists in a radio capability exposure mode and the burden of core network processing is increased.

No. of Pages : 29 No. of Claims : 10

(12) PATENT APPLICATION PUBLICATION
(19) INDIA
(22) Date of filing of Application :31/03/2021

(21) Application No.202127015414 A
(43) Publication Date : 02/07/2021

(54) Title of the invention : CONTACT GENERATION DEVICE

(51) International classification	:G06F0016953500, G06F0016280000, G06Q0010100000, G06Q0050000000, H04N0005243000	(71)**Name of Applicant :** **1)LAIK, Philippe** Address of Applicant :14 Quai Antoine 1er 98000 Monaco Monaco (72)**Name of Inventor :** **1)LAIK, Philippe**
(31) Priority Document No	:NA	
(32) Priority Date	:NA	
(33) Name of priority country	:NA	
(86) International Application No	:PCT/IB2018/057060	
Filing Date	:14/09/2018	
(87) International Publication No	:WO 2020/053630	
(61) Patent of Addition to Application Number	:NA	
Filing Date	:NA	
(62) Divisional to Application Number	:NA	
Filing Date	:NA	

(57) Abstract :
Techniques for generating a list of selective contacts are described. An address book of the user may be stored on a relational database to free up the memory space occupied by the address book. Further, selection parameters for evaluation of the plurality of contacts are determined. A plurality of contacts is filtered, based on the determined selection parameters, to generate a first set of selective contacts. Thereafter, dynamic filtering parameters are identified and based on the dynamic filtering parameters, the first set of selective contacts are filtered to generate a second set of selective contacts, wherein the second set of selective contacts are stored in the memory space of the device, and wherein the second set of selective contacts are available to the user for utilization for a predetermined time period.

Figure 6

No. of Pages : 19 No. of Claims : 17

(12) PATENT APPLICATION PUBLICATION
(19) INDIA
(22) Date of filing of Application :03/06/2021

(21) Application No.202128024764 A
(43) Publication Date : 02/07/2021

(54) Title of the invention : WIRELESS COMMUNICATION METHOD USING OFDMA RANDOM ACCESS AND WIRELESS COMMUNICATION TERMINAL USING SAME

(51) International classification	:H04W0074080000, H04W0072040000, H04W0084120000, H04W0074000000, H04L0005000000
(31) Priority Document No	:10-2016-0179781
(32) Priority Date	:27/12/2016
(33) Name of priority country	:Republic of Korea
(86) International Application No	:PCT/KR2017/015535
Filing Date	:27/12/2017
(87) International Publication No	: NA
(61) Patent of Addition to Application Number	:NA
Filing Date	:NA
(62) Divisional to Application Number	:201927025223
Filed on	:25/06/2019

(71)**Name of Applicant :**
1)WILUS INSTITUTE OF STANDARDS AND TECHNOLOGY INC.
Address of Applicant :5F 216 Hwangsaeul-ro, Bundang-gu Seongnam-si, Gyeonggi-do 13595, Republic of Korea. Republic of Korea
2)SK TELECOM CO., LTD.
(72)**Name of Inventor :**
1)KO, Geonjung
2)SON, Juhyung
3)AHN, Woojin
4)KWAK, Jinsam

(57) Abstract :
Provided is a wireless communication terminal that wirelessly communicates with a base wireless communication terminal. The wireless communication terminal includes a transceiver, and a processor. The processor is configured to set an integer selected from a range of 0 to a value equal to or smaller than an OFDMA Contention Window (OCW) as a counter for random access, receive a trigger frame for triggering random access using one or more resource units (RUs) allocated for the random access from the base wireless communication terminal using the transceiver, decrement a value of the counter based on the one or more RUs allocated for the random access, randomly select the one or more RUs allocated for the random access when the value of the counter is 0 or reaches 0, and attempt transmission to the base wireless communication terminal using the selected RU. At this time, the RU is a group of a plurality of subcarriers usable for uplink transmission and downlink transmission. Figure 41 is the representative figure.

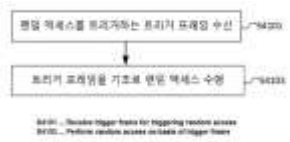

No. of Pages : 142 No. of Claims : 4

(12) PATENT APPLICATION PUBLICATION
(19) INDIA
(22) Date of filing of Application :15/06/2021

(21) Application No.202128026641 A
(43) Publication Date : 02/07/2021

(54) Title of the invention : INTEGRATING ADDITIONAL INFORMATION INTO A TELECOMMUNICATIONS CALL

(51) International classification	:H04M0003020000, H04M0007000000, H04M0003420000, H04L0029060000, H04L0029080000
(31) Priority Document No	:PCT/US2016/068795
(32) Priority Date	:28/12/2016
(33) Name of priority country	:U.S.A.
(86) International Application No	:PCT/US2017/068716
Filing Date	:28/12/2017
(87) International Publication No	: NA
(61) Patent of Addition to Application Number	:NA
Filing Date	:NA
(62) Divisional to Application Number	:201927003176
Filed on	:25/01/2019

(71)**Name of Applicant :**
1)GOOGLE LLC
Address of Applicant :1600 Amphitheatre Parkway, Mountain View, California 94043, United States of America. U.S.A.
(72)**Name of Inventor :**
1)CONVERSE, Joshua
2)BARROS, Brett
3)BURRELL, Jamie
4)COLE, Paul
5)ROYANOVA, Lilia

(57) Abstract :
Methods, systems, and apparatus include computer programs encoded on a computer-readable storage medium, including a method for providing information. A request is received by a call routing server to establish a call between a client device and a remote telecommunications device. A given transmission criterion that triggered distribution of the particular digital component to the client device is determined by a call context server. A set of contextual information that is mapped to the given transmission criterion is identified, by the call context server, in a data store storing a mapping of transmission criteria to contextual information. The client device is connected, by the call routing server, to the remote telecommunications device using the phone number. The set of contextual information is transmitted to the remote telecommunications device or a computing device that is associated with the remote telecommunications device while the call is being connected or in progress.

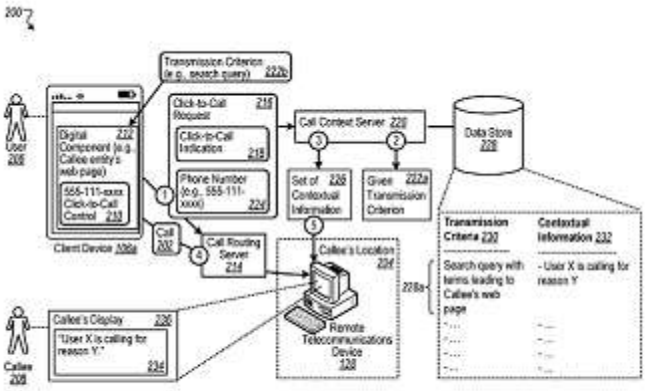

FIG. 2

No. of Pages : 37 No. of Claims : 20

(12) PATENT APPLICATION PUBLICATION
(19) INDIA
(22) Date of filing of Application :24/06/2021
(21) Application No.202128028394 A
(43) Publication Date : 02/07/2021

(54) Title of the invention : IMPROVING POST-INSTALL APPLICATION INTERACTION

(51) International classification	:G06F0016953500, G06N0020000000, G06F0008610000, G06Q0030020000, G06Q0020100000
(31) Priority Document No	:62/363,680
(32) Priority Date	:18/07/2016
(33) Name of priority country	:U.S.A.
(86) International Application No	:PCT/US2017/041876
Filing Date	:13/07/2017
(87) International Publication No	: NA
(61) Patent of Addition to Application Number	:NA
Filing Date	:NA
(62) Divisional to Application Number	:201927001791
Filed on	:15/01/2019

(71)**Name of Applicant :**
1)GOOGLE LLC
Address of Applicant :1600 Amphitheatre Parkway, Mountain View, California 94043, United States of America. U.S.A.
(72)**Name of Inventor :**
1)SANAN, Shibani
2)HARRIS, Christopher K.
3)RETTKE, Nicola
4)HSIAO, Sissie Ling-Ie
5)IEONG, Samuel Sze Ming
6)RAMACHANDRAN, Vinod Kumar
7)CHAVEZ, Anthony

(57) Abstract :
Methods, systems, and apparatus include computer programs encoded on a computer-readable storage medium, including a method for providing content. Data specifying a post-install activity is received from a provider of an application. An opportunity is identified to provide third-party content to a user. A likelihood is determined that the user will perform the specified post-install activity based on one or more attributes of the user and attributes of users that have previously performed the specified post-install activity in the application. A selection value is adjusted for third-party content that identifies the application based on the determined likelihood, wherein the selection value increases as the likelihood increases. The third-party content identifying the application is selected based on the adjusted selection value. The third-party content identifying the application is distributed to a client device of the user.

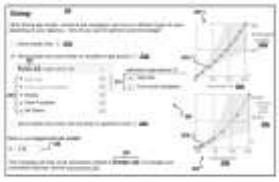

No. of Pages : 37 No. of Claims : 18

(12) PATENT APPLICATION PUBLICATION
(21) Application No.201941012131 A
(19) INDIA
(22) Date of filing of Application :28/03/2019
(43) Publication Date : 02/07/2021

(54) Title of the invention : A NICKEL-FREE SEWING NEEDLE AND A METHOD OF MANUFACTURING THEREOF

(51) International classification	:B21G0001020000, C01G0053000000, D05B0091040000, D05B0085020000, C07F0015040000
(31) Priority Document No	:NA
(32) Priority Date	:NA
(33) Name of priority country	:NA
(86) International Application No	:NA
Filing Date	:NA
(87) International Publication No	: NA
(61) Patent of Addition to Application Number	:NA
Filing Date	:NA
(62) Divisional to Application Number	:NA
Filing Date	:NA

(71)**Name of Applicant :**
1)THEOPHILUS ARPUTHARAJ DEVAGNANAM
Address of Applicant :SELDEEN, NEEDLE INSDUSTRIES (INDIA) PVT. LTD., KETTI POST, THE NILGIRIS-643215, TAMILNADU, INDIA. Tamil Nadu India
(72)**Name of Inventor :**
1)THEOPHILUS ARPUTHARAJ DEVAGNANAM

(57) Abstract :
ABSTRACT A NICKEL-FREE SEWING NEEDLE AND A METHOD OF MANUFACTURING THEREOF Embodiments of the present invention provide a nickel-free sewing needle (100). The nickel-free sewing needle (100) comprises a top portion (110) including an eye (1102) punched through a center of the top portion (110) and a bottom portion (120) connected with the top portion (110) having a cylindrical end (1202) and a pointed end (1204). Further, the eye (1102) is adapted to receive a thread that is used for stitching, sewing and/or embroidery. Also, the bottom portion (120) is adapted to be blackened to impart corrosion resistance properties to the nickel-free sewing needle (100) and eliminate the requirement of coating with nickel. [FIGURE 1]

No. of Pages : 15 No. of Claims : 6

(12) PATENT APPLICATION PUBLICATION
(21) Application No.201941025965 A
(19) INDIA
(22) Date of filing of Application :28/12/2019
(43) Publication Date : 02/07/2021

(54) Title of the invention : ENHANCED NATURALLY DERIVED BIO-AVAILABLE FORMS OF NITROGEN, PHOSPHOROUS AND POTASH USING MICROBIAL FERMENTATION

(51) International classification	:A23K0020147000, C12P0019040000, B82Y0030000000, C22B0003000000, C08L0097020000	(71)**Name of Applicant :** **1)Nisha. M. M** Address of Applicant :No. 22, Earth Villament, Dodda Gubbi Road, Kyalasanahalli, Bangalore 560 077 Karnataka India (72)**Name of Inventor :** **1)Nisha. M. M**
(31) Priority Document No	:NA	
(32) Priority Date	:NA	
(33) Name of priority country	:NA	
(86) International Application No	:NA	
Filing Date	:NA	
(87) International Publication No	: NA	
(61) Patent of Addition to Application Number	:NA	
Filing Date	:NA	
(62) Divisional to Application Number	:NA	
Filing Date	:NA	

(57) Abstract :
The present provides a novel microbial fermentation method for producing microbial strains which produce naturally derived bio available forms nutrients such as 5 NPK. The bio fertilizer according to the present invention comprises a blend comprising about 15:15:15 of NPK and about 10%n of NPK in liquid form, not less than 60% of organic carbon and about 3% of sulphur. The present invention also provides a process for producing the bio fertilizer using the microbial strains.

No. of Pages : 29 No. of Claims : 8

(12) PATENT APPLICATION PUBLICATION
(19) INDIA
(22) Date of filing of Application :28/12/2019
(21) Application No.201941025966 A
(43) Publication Date : 02/07/2021

(54) Title of the invention : ORGANIC FUNGICIDE DERIVED THROUGH MICROBIAL FERMENTATION AND EFFICIENT FORMULATION

(51) International classification	:A23K0020147000, C12P0019040000, B82Y0030000000, C22B0003000000, C08L0097020000
(31) Priority Document No	:NA
(32) Priority Date	:NA
(33) Name of priority country	:NA
(86) International Application No	:NA
Filing Date	:NA
(87) International Publication No	: NA
(61) Patent of Addition to Application Number	:NA
Filing Date	:NA
(62) Divisional to Application Number	:NA
Filing Date	:NA

(71)**Name of Applicant :**
1)Nisha. M. M
Address of Applicant :No. 22, Earth Villament, Dodda Gubbi Road, Kyalasanahalli, Bangalore 560 077 Karnataka India
(72)**Name of Inventor :**
1)Nisha. M. M

(57) Abstract :
The present invention provides an efficient organic fungicide composition. The fungicide composition is derived through microbial composition and active against pathogens. 5 The composition comprises microbial extract, Tween 80 and Menthol. The organic fungicide of the present invention is effective at a minimum dose of 0.01 ml/ lt.

No. of Pages : 29 No. of Claims : 9

(12) PATENT APPLICATION PUBLICATION
(21) Application No.201941047951 A
(19) INDIA
(22) Date of filing of Application :31/12/2019
(43) Publication Date : 02/07/2021

(54) Title of the invention : SYSTEM AND METHOD TO COLLECT, CLASSIFY PATIENTS CLINICAL DATA AND PROVIDE DECISION SUPPORT

(51) International classification	:G16H0010200000, G16H0010600000, G16H0050200000, G16H0050700000, G06Q0050220000	(71)**Name of Applicant :** **1)Ambati Sivamallikarjuna Reddy** Address of Applicant :Door No. 4-421-1, Sree Ramulapeta, Tadipatri - 515411, Anantapur District, Andhra Pradesh Andhra Pradesh India
(31) Priority Document No	:NA	(72)**Name of Inventor :**
(32) Priority Date	:NA	**1)Ambati Sivamallikarjuna Reddy**
(33) Name of priority country	:NA	
(86) International Application No	:NA	
Filing Date	:NA	
(87) International Publication No	: NA	
(61) Patent of Addition to Application Number	:NA	
Filing Date	:NA	
(62) Divisional to Application Number	:NA	
Filing Date	:NA	

(57) Abstract :
The present invention relates to a system (100) and method (200) for clinical data collection in a schematic flow in which a handheld electronic device having a screen display collects and integrates one or more forms of clinical data for outcome reporting. The clinical data is collected in electronic device by using digital assessment forms pertinent to patient disorder. The various modules within the software and/or application (30) can provide a patient (20), physician (16), caregiver, pharmacist (14) and biochemist (15) a user-friendly interface (30) for collecting various forms of clinical data. A permanent record can be generated from the collected data, where the permanent record can be interoperable and synchronized for later utilization such as optimization of the data collection template, production of report, data analysis, clinical decision support system using predictive analytics, artificial neural networks with representation learning, machine learning supervised, semi supervised and unsupervised learning and deep learning (32). All permanent records can desirably have authentic storage and compliant cyber security encryption methods. Fig related to abstract is Fig. 1 & 2.

No. of Pages : 26 No. of Claims : 16

(12) PATENT APPLICATION PUBLICATION
(19) INDIA
(22) Date of filing of Application :26/12/2019
(21) Application No.201941053867 A
(43) Publication Date : 02/07/2021

(54) Title of the invention : FLAT SURFACE CLAIMBING ROBOT

(51) International classification	:H04N0019109000, G02B0013220000, H04N0005782000, G11B0007006000, G11B0007131000	(71)**Name of Applicant :** **1)ROBOTEX** Address of Applicant :4/28 A, Rajalakshmi Nagar, Lakshmipuram, Peelamedu, Coimbatore, Tamil Nadu. Tamil Nadu India
(31) Priority Document No	:NA	(72)**Name of Inventor :**
(32) Priority Date	:NA	**1)Amirthalingam Jothimurugan**
(33) Name of priority country	:NA	
(86) International Application No	:NA	
Filing Date	:NA	
(87) International Publication No	: NA	
(61) Patent of Addition to Application Number	:NA	
Filing Date	:NA	
(62) Divisional to Application Number	:NA	
Filing Date	:NA	

(57) Abstract :
The present invention relates to the field of an automated based climbing robot. A flat surface climbing robot (1) comprises of atleast a suction machine unit (11), pressure tube arrangement (21), robot frame (31) and plurality of suction and drive unit (41) wherein said suction and drive unit (41) comprises of suction unit (51) and drive unit (61).

No. of Pages : 13 No. of Claims : 8

(12) PATENT APPLICATION PUBLICATION
(19) INDIA
(22) Date of filing of Application :26/12/2019

(21) Application No.201941053868 A
(43) Publication Date : 02/07/2021

(54) Title of the invention : SINGLE SIGN ON (SSO) CAPABILITY FOR SERVICES ACCESSED THROUGH MESSAGES

(51) International classification	:H04L0029060000, G06F0021410000, H04L0029080000, G06F0021330000, H04L0012460000
(31) Priority Document No	:NA
(32) Priority Date	:NA
(33) Name of priority country	:NA
(86) International Application No	:NA
Filing Date	:NA
(87) International Publication No	: NA
(61) Patent of Addition to Application Number	:NA
Filing Date	:NA
(62) Divisional to Application Number	:NA
Filing Date	:NA

(71)**Name of Applicant :**
1)VMWARE, INC.
Address of Applicant :3401 Hillview Avenue, Palo Alto, California USA-94304 U.S.A.
(72)**Name of Inventor :**
1)ARJUN KOCHHAR
2)SUMAN ALUVALA
3)AMIT YADAV
4)SHREE HARSHA SHEDIGUMME

(57) Abstract :
Disclosed are various approaches for facilitating single sign-on (SSO) for third-party services that are accessible through messages (e.g., email) received by a user. A user can receive a message that includes an embedded URL or link that opens in a third-party service that requires authentication. Instead of requiring the user to enter authentication credentials for accessing the third-party service, a tunnel service can be used to intercept requests for authentication and redirect the requests to an identity manager that can issue a SSO token following an authentication of the user and device. Upon supplying the third-party service with the SSO token, the user can access the content associated with the third-party service without entering authentication credentials.

No. of Pages : 44 No. of Claims : 10

(12) PATENT APPLICATION PUBLICATION
(21) Application No.201941053902 A
(19) INDIA
(22) Date of filing of Application :26/12/2019
(43) Publication Date : 02/07/2021

(54) Title of the invention : SENDING OR RECEIVING A MESSAGE WITH A SUBJECT IN A MESSAGING APPLICATION

(51) International classification	:G06Q0010100000, G06F0003048200, G06F0016330000, H04W0004120000, A63F0013870000
(31) Priority Document No	:NA
(32) Priority Date	:NA
(33) Name of priority country	:NA
(86) International Application No	:NA
Filing Date	:NA
(87) International Publication No	: NA
(61) Patent of Addition to Application Number	:NA
Filing Date	:NA
(62) Divisional to Application Number	:NA
Filing Date	:NA

(71)**Name of Applicant :**
1)Sarath Kakumanu
Address of Applicant :KPOST SOFTWARE PVT LTD, GREENWAYS TOWER (II FLOOR) 119, ST. MARY™S RD, ABHIRAMAPURAM, MANDAVELI, CHENNAI- 600018, TAMILNADU, INDIA Tamil Nadu India
(72)**Name of Inventor :**
1)Sarath Kakumanu

(57) Abstract :
A system and method for sending and receiving messages with a ˜subject™ in a structured messaging application; thereby achieving the objective of presenting the messages within the message folders for the users to easily classify the messages based on the ˜subject™. The ˜message subject module™ configured in association with a structured messaging application for searching the existing ˜subject™s in an alphabetically arranged database or allowing the user to use the existing ˜subject™ or create a new ˜subject™ while sending a new message. The ˜message subject module™ enables a user to send a message with a ˜subject™ to another individual user or group. It enables the receivers to get the message with a ˜subject™. It also gives options for the group members to initiate a conversation under the single ˜subject™ for everyone to understand the topic of discussion without any confusion.

No. of Pages : 27 No. of Claims : 12

(12) PATENT APPLICATION PUBLICATION
(19) INDIA
(22) Date of filing of Application :26/12/2019
(21) Application No.201941053910 A
(43) Publication Date : 02/07/2021

(54) Title of the invention : LIGHT WEIGHT FIBER REINFORCED FERROCEMENT PRODUCT

(51) International classification	:C04B0028020000, E04C0005070000, E04H0009020000, E04H0009140000, E04C0002380000
(31) Priority Document No	:NA
(32) Priority Date	:NA
(33) Name of priority country	:NA
(86) International Application No	:NA
Filing Date	:NA
(87) International Publication No	: NA
(61) Patent of Addition to Application Number	:NA
Filing Date	:NA
(62) Divisional to Application Number	:NA
Filing Date	:NA

(71)**Name of Applicant :**
1)MRS.M.MAHALAKSHMI
Address of Applicant :DEPARTMENT OF CIVIL ENGINEERING, BANNARI AMMAN INSTITUTE OF TECHNOLOGY, SATHYAMANGALAM, ERODE (DT), TAMILNADU-638401, INDIA. Tamil Nadu India
2)MR.N.MANJUNATH
(72)**Name of Inventor :**
1)MRS.M.MAHALAKSHMI
2)MR.N.MANJUNATH

(57) Abstract :
During natural disasters the structural system should perform well and the composition used in such systems should be of light as well should resist the impact caused by the earthquake forces. To overcome the defect of having heavy structural components through nominal mix, light weight components can be used by modifying the mix proportions. The Lightweightfiber reinforced ferrocement product can be employed in building construction and as pre-engineered building panels. The panels will be of hydraulic binder combined with light weight aggregate to produce a structural light weight member. The nominal mix containing fine and coarse aggregate is replaced by light weight fine and coarse aggregate namely leca and perlite. The galvanised iron mesh and carbon fibers are present in the composite to ensure additional strength when the sections are to be made extremely thin.

No. of Pages : 6 No. of Claims : 4

(12) PATENT APPLICATION PUBLICATION
(21) Application No.201941053915 A
(19) INDIA
(22) Date of filing of Application :26/12/2019
(43) Publication Date : 02/07/2021

(54) Title of the invention : AN SMART HYBRID SECURITY SYSTEM BASED ON MULTIMODAL BIOMETRICS

(51) International classification	:G06K0009000000, G07C0009000000, G06F0021320000, G06F0021440000, H04W0012080000	(71)**Name of Applicant :** **1)DR.J.VIJAY FRANKLIN** Address of Applicant :DEPARTMENT OF COMPUTER SCIENCE ENGINEERING, BANNARI AMMAN INSTITUTE OF TECHNOLOGY, SATHYAMANGALAM, ERODE(Dt), TAMIL NADU - 638 401. Tamil Nadu India
(31) Priority Document No	:NA	**2)MRS K.KIRUTHIKAA**
(32) Priority Date	:NA	**3)MR S.YUVARAJ**
(33) Name of priority country	:NA	**4)MRS.T.KANIMOZHI**
(86) International Application No	:NA	**5)MRS.R.RAMYA**
Filing Date	:NA	(72)**Name of Inventor :**
(87) International Publication No	: NA	**1)DR.J.VIJAY FRANKLIN**
(61) Patent of Addition to Application Number	:NA	**2)MRS K.KIRUTHIKAA**
Filing Date	:NA	**3)MR S.YUVARAJ**
(62) Divisional to Application Number	:NA	**4)MRS.T.KANIMOZHI**
Filing Date	:NA	**5)MRS.R.RAMYA**

(57) Abstract :
As modern society increasingly depends on systems to provide secure environments and services to people, it becomes paramount to ensure the security of a system through means to identify the validity of an individual requesting access to it. The proposed system ensures the security of an individual in high standard, where a user can provide the input by means of any one of the biometric traits such as . Fingerprint, Palm Print and Iris. The input received through sensor will be hybrid with facial expression of a user received through camera and a 16 alpha numerical threshold value will be generated by the system and it will be compared with same type of threshold value that generated with the help of DNA pattern of a user that already stored in the cloud. If the threshold values are identical then the user will be the authorized one to access.

No. of Pages : 8 No. of Claims : 4

(12) PATENT APPLICATION PUBLICATION
(21) Application No.201941053936 A
(19) INDIA
(22) Date of filing of Application :26/12/2019
(43) Publication Date : 02/07/2021

(54) Title of the invention : SYSTEM, APPARATUS AND METHOD FOR MANAGING ENERGY CONSUMPTION AT A TECHNICAL INSTALLATION

(51) International classification	:G05B0019418000, G06Q0010040000, G06Q0010060000, G01L0001200000, G06N0003100000
(31) Priority Document No	:NA
(32) Priority Date	:NA
(33) Name of priority country	:NA
(86) International Application No	:NA
Filing Date	:NA
(87) International Publication No	: NA
(61) Patent of Addition to Application Number	:NA
Filing Date	:NA
(62) Divisional to Application Number	:NA
Filing Date	:NA

(71)**Name of Applicant :**
1)Siemens Mobility GmbH
Address of Applicant :Otto-Hahn-Ring 6, 81739 M¼nchen, Bayern Germany
(72)**Name of Inventor :**
1)Jyoti, Poonam
2)Mittal, Akash
3)Ramanath, Vinay
4)Chatterjee, Arko

(57) Abstract :
SYSTEM, APPARATUS AND METHOD FOR MANAGING ENERGY CONSUMPTION AT A TECHNICAL INSTALLATION
A system (105), an apparatus (110) and a method for managing energy consumption at a technical installation (107) is disclosed. The method comprises computing, by a processing unit (130), energy units likely to be consumed by the technical installation (107) based on data corresponding to one or more parameters using an artificial intelligence model (300). The one or more parameters are associated with factors impacting an operation of the technical installation (107). Further, a load forecast model for a predefined time period is generated based on the computed energy units likely to be consumed by the technical installation (107). Further, an overall impact on the technical installation (107) is determined by analysing the load forecast model. Further, one or more actions are performed at the technical installation (107) in such a manner that the overall impact on the technical installation (107) is kept optimal.

No. of Pages : 42 No. of Claims : 17

(12) PATENT APPLICATION PUBLICATION
(21) Application No.201941053940 A
(19) INDIA
(22) Date of filing of Application :26/12/2019
(43) Publication Date : 02/07/2021

(54) Title of the invention : DEVICE AND SYSTEM FOR BINOCULAR INDIRECT OPHTHALMOSCOPY FOR PRODUCING REAL TIME ERECT RETINAL IMAGES

(51) International classification	:H04N0005232000, G02B0027010000, G06F0003030000, H04N0005272000, A61B0003113000
(31) Priority Document No	:NA
(32) Priority Date	:NA
(33) Name of priority country	:NA
(86) International Application No	:NA
Filing Date	:NA
(87) International Publication No	: NA
(61) Patent of Addition to Application Number	:NA
Filing Date	:NA
(62) Divisional to Application Number	:NA
Filing Date	:NA

(71)**Name of Applicant :**
1)SAMPANGI, Raju
Address of Applicant :No. 156, Kantha Nivas, 3rd Stage, 3rd Phase, 1st Block, Banashankari, Bangalore -560085, Karnataka, India Karnataka India
2)BANGALORE CHIKKA HANUMANTHAPPA, Hemalatha
(72)**Name of Inventor :**
1)SAMPANGI, Raju
2)BANGALORE CHIKKA HANUMANTHAPPA, Hemalatha

(57) Abstract :
ABSTRACT DEVICE AND SYSTEM FOR BINOCULAR INDIRECT OPHTHALMOSCOPY FOR PRODUCING REAL TIME ERECT RETINAL IMAGES • The present invention provides a digital device and system implementing binocular indirect ophthalmology for producing real-time, three dimensional, re-inverted erect images of the retina inside an eye. The digital device may include at least one camera sensor with appropriate optical arrangement to create side by side images, or may comprise at least 2 camera sensors separated by appropriate distance and placed close to an illumination beam. The two camera sensors are paired together using a synchronisation processor to produce out real time side by side images/live video. The output from the camera sensors is programmed such that the image is re-inverted and reversed to produce an erect image. Additionally, the output image signals from the camera sensors may be split into two using a beam splitter, for outputting to a head mounted display unit wore [RS4] by an examiner, while also simultaneously outputting to a remotely located display unit.

No. of Pages : 24 No. of Claims : 24

(12) PATENT APPLICATION PUBLICATION
(21) Application No.201941053941 A
(19) INDIA
(22) Date of filing of Application :26/12/2019
(43) Publication Date : 02/07/2021

(54) Title of the invention : SMART SYSTEM TO IDENTIFY THE RHINOCEROS BEETLE IN THE COCONUT TREE

(51) International classification	:A23N0005030000, A01G0007060000, A01M0031000000, A01G0017000000, A61K0036889000
(31) Priority Document No	:NA
(32) Priority Date	:NA
(33) Name of priority country	:NA
(86) International Application No	:NA
Filing Date	:NA
(87) International Publication No	: NA
(61) Patent of Addition to Application Number	:NA
Filing Date	:NA
(62) Divisional to Application Number	:NA
Filing Date	:NA

(71)**Name of Applicant :**
1)G. Sathish Kumar
Address of Applicant :1G, Vallinayagam Street, Kottur Malayandipattinam, Pollachi, Coimbatore, Tamilnaud, India-642114. Tamil Nadu India
(72)**Name of Inventor :**
1)G. Sathish Kumar
2)Mr. V. Viswanathan
3)Dr. K. Premalatha
4)R. Pavithra
5)R. Ramya

(57) Abstract :
Coconut cultivation is one of the major agricultural practices in the world. It plays important role in the economy of Indian farmers. The coconut tree will produce the yield till its entire life time. Rhinoceros beetle is one of the major threats to the coconut tree. Rhinoceros beetle is mainly a pest of coconut palms. The beetles damage palms by boring into the centre of the crown, injuring the young growing tissues and feed on the exuded sap. As they bore into the crown, they cut through the developing leaves. When the leaves grow out and unfold, the damage appears as V-shaped cuts in the fronds or holes through the midrib. The infected tree will be destroyed completely within 3 to 4 months. The smart system is developed to find the presence of Rhinoceros beetle in the coconut tree. The high sensitive mike, WIFI device along with' local storage and audio comparator is fitted to the top of coconut tree to record the sound of the Rhinoceros beetle. The currently recorded sound is made to match with the already stored sound of Rhinoceros beetle. If the frequency of two sounds matches, the signal will be sent to the server. In turn the server will send the alert message to the farmer about the presence of Rhinoceros beetle in the coconut tree. The framer will take necessary steps to wipe out the Rhinoceros beetle from the coconut palm which results in high yield by the coconut trees.

No. of Pages : 12 No. of Claims : 2

(12) PATENT APPLICATION PUBLICATION
(21) Application No.201941053945 A
(19) INDIA
(22) Date of filing of Application :26/12/2019
(43) Publication Date : 02/07/2021

(54) Title of the invention : FABRICATION OF PORTABLE SEWING THREAD MAKING MACHINE FROM CUTTING WASTE OF GARMENT INDUSTRY-A SUSTAINABLE APPRAOCH

(51) International classification	:D02G0003280000, D06B0003040000, D02G0003360000, D02G0003400000, D01H0004160000	(71)**Name of Applicant :** **1)kCG COLLEGE OF TECHNOLOGY** Address of Applicant :KCG Nagar, Karapakkam, Chennai, Tamilnadu, India-600097. Tamil Nadu India
(31) Priority Document No	:NA	(72)**Name of Inventor :**
(32) Priority Date	:NA	**1)G. MOHAMED ZAKRIYA**
(33) Name of priority country	:NA	**2)V. BHANU REKHA**
(86) International Application No	:NA	**3)K.GOWRI**
Filing Date	:NA	**4)D. EASU**
(87) International Publication No	: NA	
(61) Patent of Addition to Application Number	:NA	
Filing Date	:NA	
(62) Divisional to Application Number	:NA	
Filing Date	:NA	

(57) Abstract :
The present invention focuses the' fabrication of a portable sewing thread making machine from cutting waste of garment industry.or any other kind of fibre waste or blends. Closely set saw tooth rollers open and individualize the fibre. Autoleveller equipped drawing rollers parallelize and orient the fibres. Air controlled passage of fibres spun into yarn by rotor spinning set up is further twisted with the help of perforated roller. 3 such similar arrangements twisted together to produce 3 ply yarn. Plied yarn coated with biopolymer adhesives with silicone finish to meet the requirement of sewing thread strength. After this-process: the coated yarn will be dried in the heating zone. Now the dried yarn will pass on to the yarn forming unit. Splicing and optimum tension setting device filled to produce the required strength and count of yarn lo make a compact package of plied sewing thread.

No. of Pages : 7 No. of Claims : 8

(12) PATENT APPLICATION PUBLICATION
(19) INDIA
(22) Date of filing of Application :26/12/2019
(21) Application No.201941053946 A
(43) Publication Date : 02/07/2021

(54) Title of the invention : SHEAR WEB KEY FOR REINFORCED CONCRETE BEAM

(51) International classification	:F03D0001060000, F16K0037000000, E04C0003200000, H04W0012040000, G01G0003140000
(31) Priority Document No	:NA
(32) Priority Date	:NA
(33) Name of priority country	:NA
(86) International Application No	:NA
Filing Date	:NA
(87) International Publication No	: NA
(61) Patent of Addition to Application Number	:NA
Filing Date	:NA
(62) Divisional to Application Number	:NA
Filing Date	:NA

(71)**Name of Applicant :**
1)KCG COLLEGE OF TECHNOLOGY
Address of Applicant :KCG Nagar, Karapakkam, Chennai, Tamilnadu, India-600097. Tamil Nadu India
(72)**Name of Inventor :**
1)S. Ragul
2)K.Shimar shahul hameed
3)Sony mathew
4)A. V. Suganya

(57) Abstract :
Not Submitted...

No. of Pages : 11 No. of Claims : 10

(12) PATENT APPLICATION PUBLICATION
(19) INDIA
(22) Date of filing of Application :26/12/2019

(21) Application No.201941053947 A
(43) Publication Date : 02/07/2021

(54) Title of the invention : IOT BASED WATER QUALITY MONITORING FOR AGRICULTURAL USE

(51) International classification	:G01N0033180000, H04L0029080000, G06Q0050100000, G06Q0050060000, H04W0004700000
(31) Priority Document No	:NA
(32) Priority Date	:NA
(33) Name of priority country	:NA
(86) International Application No	:NA
Filing Date	:NA
(87) International Publication No	: NA
(61) Patent of Addition to Application Number	:NA
Filing Date	:NA
(62) Divisional to Application Number	:NA
Filing Date	:NA

(71)**Name of Applicant :**
1)KCG COLLEGE OF TECHNOLOGY
Address of Applicant :KCG NAGAR, KARAPAKKAM, CHENNAI-600097, TAMILNADU, INDIA. Tamil Nadu India
(72)**Name of Inventor :**
1)Dr.R.DHANALAKSHMI
2)Mr.T.DEENADAYALAN
3)Mr.M.ABHISHEK
4)Mr.P.JACOB PAUL
5)5.DINESH
6)6.S.GOKUL
7)JYOTHI KUMARI SINGH
8)R.KIRTHANA

(57) Abstract :
NOT SUBMITTED

No. of Pages : 8 No. of Claims : 7

(12) PATENT APPLICATION PUBLICATION
(21) Application No.201941053948 A
(19) INDIA
(22) Date of filing of Application :26/12/2019
(43) Publication Date : 02/07/2021

(54) Title of the invention : ENHANCEMENT OF AERODYNAMIC PERFORMANCE OF WIND TURBINE USING INNOVATIVE STEPPED BLADE DESIGN

(51) International classification	:F03D0001060000, F03D0001040000, F01D0005140000, B22C0009040000, B64C0011180000	(71)**Name of Applicant :** **1)KCG COLLEGE OF TECHNOLOGY** Address of Applicant :KCG NAGAR KARAPAKKAM, CHENNAI, TAMIL NADU, INDIA-600097 Tamil Nadu India **2)Dr.ASAD AHMED.R**
(31) Priority Document No	:NA	(72)**Name of Inventor :**
(32) Priority Date	:NA	**1)Mr.SYAM NARAYANAN.S**
(33) Name of priority country	:NA	**2)Dr.ASAD AHMED.R**
(86) International Application No	:NA	
Filing Date	:NA	
(87) International Publication No	: NA	
(61) Patent of Addition to Application Number	:NA	
Filing Date	:NA	
(62) Divisional to Application Number	:NA	
Filing Date	:NA	

(57) Abstract :
NOT SUBMITTED

No. of Pages : 7 No. of Claims : 3

(12) PATENT APPLICATION PUBLICATION
(19) INDIA
(22) Date of filing of Application :26/12/2019
(21) Application No.201941053949 A
(43) Publication Date : 02/07/2021

(54) Title of the invention : LOW COST SEWER EXPURGATE CONTRIVANCE

(51) International classification	:E03F0009000000, E03F0007100000, G06N0003000000, B08B0009049000, B62D0057028000
(31) Priority Document No	:NA
(32) Priority Date	:NA
(33) Name of priority country	:NA
(86) International Application No	:NA
Filing Date	:NA
(87) International Publication No	: NA
(61) Patent of Addition to Application Number	:NA
Filing Date	:NA
(62) Divisional to Application Number	:NA
Filing Date	:NA

(71)**Name of Applicant :**
1)KCG COLLEGE OF TECHNOLOGY
Address of Applicant :KCG NAGAR KARAPAKKAM, CHENNAI TAMIL NADU INDIA-600097 Tamil Nadu India
(72)**Name of Inventor :**
1)GOWTHAM.S
2)KARTHI.C.H
3)EDWIN EMANUEL RAJAN.S
4)AARON PETER
5)JISHNU RAJA KC
6)GOKUL RAAJ.A

(57) Abstract :
Manual scavenging a term which we have been hearing for many generations, but a permanent solution to eradicate it has not yet been found. Government also has brought many new schemes and machines to replace manual scavenging (few methods include jetting, sucking) but these machines require huge capital to be installed. In order to change these practice and build a healthy environment we propose an idea to clear sewers, septic tanks and drains. We put forth the idea of making a robot which is efficient enough to clear the blockades, clean the sewers and drains. The robot has an egg shaped structure which enables it to float in drains without sinking. It has a mechanical weight balancing system (controlled by a motor) which helps in moving the robot in vertical direction and motor driven propeller for forward and backward movement. The robot also has a camera to get visual information from the drains. The entire robot is connected to exterior operating vehicle via a fibre cable in order to pull out the robot in case of emergencies. Thus the robot that could be efficient in all aspects such as performance, cost and operation is constructed which paves the way to eradicate manual scavenging.

No. of Pages : 10 No. of Claims : 10

(12) PATENT APPLICATION PUBLICATION
(21) Application No.201941053950 A
(19) INDIA
(22) Date of filing of Application :26/12/2019
(43) Publication Date : 02/07/2021

(54) Title of the invention : GRAPHIC TICK

(51) International classification	:G09B0019000000, G09B0011060000, A47G0019220000, B60R0021000000, B43L0001000000
(31) Priority Document No	:NA
(32) Priority Date	:NA
(33) Name of priority country	:NA
(86) International Application No	:NA
Filing Date	:NA
(87) International Publication No	: NA
(61) Patent of Addition to Application Number	:NA
Filing Date	:NA
(62) Divisional to Application Number	:NA
Filing Date	:NA

(71)**Name of Applicant :**
1)KCG COLLEGE OF TECHNOLOGY
Address of Applicant :KCG NAGAR, KARAPAKKAM, CHENNAI-600097, TAMILNADU, INDIA Tamil Nadu India
(72)**Name of Inventor :**
1)DR.JOSE ANAND
2)MS.NIVETHA A
3)MR.AJAI KRISHNA J M
4)MR.LOGESH D
5)MS. MYTHILISHA S
6)MR. SIVARAM E
7)MR. RAJ KUMARAN V

(57) Abstract :
Our model 'Graphic tick' is used to improve the condition of Dysgraphia in children. This is a hardware device which mainly concentrates on writing disability in dysraphic children. Dysgraphia by the name literally means difficulty in writing. It also affects the fine motor skills in children. Children between the age group of 5 - 14 are majorly affected. About 4% of primary school students are said to have Dysgraphia. Famous people like Agatha Christie, Thomas Alva Edison and Albert Einstein were known to be dysgraphic during their childhood. People with Dysgraphia can often have unusual difficulties with handwriting and spelling which in turn can cause writing fatigue. Children with Dysgraphia cannot write in a straight alignment with stability. Our prototype mainly consists of a writing board, stylus and display unit. The child is asked to write the word on the writing board which is displayed on the display unit. The sensors attached to the board senses whether the child is writing in a straight line or not by maintaining the alignment. If the child deviates from the alignment, an audio unit will indicate that the child went wrong. We can also check whether the child has written the exact word displayed on the displayed unit. If not, the child has to write the same word again. This device can also be used in physiotherapy for people who have met with accidents and lost their ability to write properly.

No. of Pages : 5 No. of Claims : 10

(12) PATENT APPLICATION PUBLICATION
(21) Application No.201941053951 A
(19) INDIA
(22) Date of filing of Application :26/12/2019
(43) Publication Date : 02/07/2021

(54) Title of the invention : SAFETY ELECTRONIC GADGET FOR WOMEN

(51) International classification	:H04N0007180000, G08B0013196000, B67D0001080000, G06Q0050260000, G08B0027000000	(71)**Name of Applicant :** **1)KCG COLLEGE OF TECHNOLOGY** Address of Applicant :KCG Nagar, Karapakkam, Chennai-600097, Tamil Nadu, India. Tamil Nadu India
(31) Priority Document No	:NA	(72)**Name of Inventor :**
(32) Priority Date	:NA	**1)Dr.Deepa Jose**
(33) Name of priority country	:NA	**2)Ms. Arthi. M**
(86) International Application No	:NA	**3)Ms.Niranjana. P**
Filing Date	:NA	**4)Ms. M.Megala**
(87) International Publication No	: NA	
(61) Patent of Addition to Application Number	:NA	
Filing Date	:NA	
(62) Divisional to Application Number	:NA	
Filing Date	:NA	

(57) Abstract :
Even in this modern era women are feeling insecure to step out of their house because of increasing crimes. Also proof at time of crime event is being tampered with in most cases. The proposed device is more like a safety system in case of emergency. The device relies on Al and edge computing. It is an easy to carry novel device with more features and function. The main purpose of our project is to provide safety for women from the dangerous zone. The gadget can do automatic crime prediction against women and automatic crime alert not existing in current devices . The images will be captured by a python semiconductor camera that is fixed to the microcontroller /pynq board to do real time processing of images. The GSM, GPS and blue tooth modules help in alerting and tracking. The entire device is in the form of a small gadget approximately (10 cm x 6 cm) that can be fixed to collar or neck line of the clothing worn by the user. Another uniqueness is that AI is used for crime prediction which has not been done in any other safety gadget. So that the user can be alerted well ahead of safety problems enabling the user to take safety steps. This safety gadget records both audio and images which can be used for further investigations. It also detects the hidden cameras which help in our privacy. SMS alerts to pre existing contacts are sent when emergency button is switched on. Already existing safety gadgets can send alert messages to caretakers, however the gadget does not predict crime.

No. of Pages : 8 No. of Claims : 4

(12) PATENT APPLICATION PUBLICATION
(19) INDIA
(22) Date of filing of Application :26/12/2019
(21) Application No.201941053952 A
(43) Publication Date : 02/07/2021

(54) Title of the invention : SMART BLIND STICK

(51) International classification	:A61H0003060000, G01S0015930000, A61F0009080000, H04M0011040000, G08G0001005000
(31) Priority Document No	:NA
(32) Priority Date	:NA
(33) Name of priority country	:NA
(86) International Application No	:NA
Filing Date	:NA
(87) International Publication No	: NA
(61) Patent of Addition to Application Number	:NA
Filing Date	:NA
(62) Divisional to Application Number	:NA
Filing Date	:NA

(71)**Name of Applicant :**
1)KCG COLLEGE OF TECHNOLOGY
Address of Applicant :KCG Nagar, Karapakkam, Chennai-600097, Tamil Nadu, India. Tamil Nadu India
(72)**Name of Inventor :**
1)M.KARTHIK VELAN
2)V.KEERTHANA
3)T.ALAMELU MANGAI
4)A.ARVIN TONY

(57) Abstract :
According to WHO, there are approximately 37 million people across the globe who are blind. One has to ask guidance to reach their destination. They have to face more struggles in their life daily life. We have invented a low cost and light weight smart blind stick. The developed system uses the ultrasonic sensors fitted to the blind stick through which the obstacles are delected and give the indication of obstacles to the blind person using the buzzer. In case of any emergency or the blind person loses his way then the blind person can send the SMS of his current location to the concern family member or friends using the GSM & GPS module fitted on the Blind Stick through an emergency push button.

No. of Pages : 7 No. of Claims : 10

(12) PATENT APPLICATION PUBLICATION
(21) Application No.201941053960 A
(19) INDIA
(22) Date of filing of Application :26/12/2019
(43) Publication Date : 02/07/2021

(54) Title of the invention : METHOD AND SYSTEM FOR DETERMINING CORRECTNESS OF PREDICTIONS PERFORMED BY DEEP LEARNING MODEL

(51) International classification	:G06N0020000000, G06N0003080000, G06N0003040000, G06K0009660000, G06N0005040000	(71)**Name of Applicant :** **1)WIPRO LIMITED** Address of Applicant :Doddakannelli, Sarjapur Road, Bangalore 560035, Karnataka, India. Karnataka India (72)**Name of Inventor :** **1)ARINDAM CHATTERJEE** **2)MANJUNATH RAMACHANDRA IYER** **3)VINUTHA BANGALORE NARAYANAMURTHY**
(31) Priority Document No	:NA	
(32) Priority Date	:NA	
(33) Name of priority country	:NA	
(86) International Application No	:NA	
Filing Date	:NA	
(87) International Publication No	: NA	
(61) Patent of Addition to Application Number	:NA	
Filing Date	:NA	
(62) Divisional to Application Number	:NA	
Filing Date	:NA	

(57) Abstract :
The disclosure relates to method and system for determining correctness of predictions performed by deep learning model. The method includes extracting a neuron activation pattern of a layer of the deep learning model with respect to the input data, and generating an activation vector based on the extracted neuron activation pattern. The method further includes determining the correctness of the prediction performed by the deep learning model with respect to the input data using a prediction validation model and based on the activation vector. The prediction validation model is a machine learning model that has been generated and trained using training activation vectors derived from correctly predicted test dataset and incorrectly predicted test dataset of the deep learning model. The method further includes providing the correctness of the prediction performed by the deep learning model with respect to the input data for subsequent rendering or subsequent processing. Fig 2

No. of Pages : 32 No. of Claims : 10

(12) PATENT APPLICATION PUBLICATION
(19) INDIA
(22) Date of filing of Application :26/12/2019

(21) Application No.201941053993 A
(43) Publication Date : 02/07/2021

(54) Title of the invention : TRANSMISSION OF DATA OVER CONDUCTING WIRES

(51) International classification	:F21K0009000000, G06F0003044000, H01L0023480000, H01F0027280000, G02F0001134500
(31) Priority Document No	:NA
(32) Priority Date	:NA
(33) Name of priority country	:NA
(86) International Application No	:NA
Filing Date	:NA
(87) International Publication No	: NA
(61) Patent of Addition to Application Number	:NA
Filing Date	:NA
(62) Divisional to Application Number	:NA
Filing Date	:NA

(71)**Name of Applicant :**
1)INTEL CORPORATION
Address of Applicant :2200 Mission College Boulevard, Santa Clara, California 95054, USA U.S.A.
(72)**Name of Inventor :**
1)Ramaswamy Parthasarathy
2)Punit Ashok Rathod
3)Jayprakash Thakur
4)Arvind Sundaram
5)Ajay Sharma
6)Nikita Bipin Ambasana
7)Satish Ramachandra

(57) Abstract :
A communication system communicates data elements on a conducting wire. In an embodiment, a sequence of data elements to be transmitted is electrically represented on a pair of terminals, and a transmission element located at a first portion of the conducting wire transmits the sequence in the form of a wave on a surface of the conducting wire. The transmission element includes a first conductor wrapped around the first portion of the conducting wire, a first insulator located between the first conductor and the first portion of the conducting wire, and a conductive structure disposed around the first conductor. The conductive structure has a narrow cross section at one end and extends outwardly to a broader cross section at the other end. A first terminal of the pair of terminals is electrically connected to the first conductor and the second terminal is electrically connected to the conductive structure.

No. of Pages : 28 No. of Claims : 20

(12) PATENT APPLICATION PUBLICATION
(19) INDIA
(22) Date of filing of Application :26/12/2019

(21) Application No.201941054015 A
(43) Publication Date : 02/07/2021

(54) Title of the invention : SYSTEMS AND METHODS OF GENERATING A SCREENSHOT HAVING EDITED AREA

(51) International classification	:G06F0003048800, G06K0009320000, G06F0003048400, H04N0001387000, H04W0004021000
(31) Priority Document No	:NA
(32) Priority Date	:NA
(33) Name of priority country	:NA
(86) International Application No	:NA
Filing Date	:NA
(87) International Publication No	: NA
(61) Patent of Addition to Application Number	:NA
Filing Date	:NA
(62) Divisional to Application Number	:NA
Filing Date	:NA

(71)**Name of Applicant :**
1)Samsung Electronics Co., Ltd.
Address of Applicant :129, Samsung-ro, Yeongtong-gu, Suwon-si, Gyeonggi-do, 443-742, Republic of Korea Republic of Korea

(72)**Name of Inventor :**
1)YADAV, Saurabh
2)BABANBHAI, Khajapeer
3)SHANTARAM, Nagaraj Nagekar
4)AGRAWAL, Vikas

(57) Abstract :
A method (1000) of generating a screenshot having edited area in a touch screen electronic device (202) is disclosed. The method (1000) includes receiving a user instruction indicative of initiating capturing of the screenshot of a user interface. The method (1000) includes detecting an area of the user interface that is covered by at least one finger of a user. The covering of the area is detected at the time of receiving the user instruction of initiating the capturing of the screenshot. The method (1000) includes determining an orientation of the at least one finger while covering the area. At least one predefined orientation of the at least one finger is associated with at least one type of edit to be made to the covered area. The method (1000) includes generating the screenshot having the edited area, based on the determined orientation of the at least one finger.

No. of Pages : 30 No. of Claims : 10

(12) PATENT APPLICATION PUBLICATION
(21) Application No.201941054027 A
(19) INDIA
(22) Date of filing of Application :26/12/2019
(43) Publication Date : 02/07/2021

(54) Title of the invention : MULTIUTILITY AGRICULTURAL VEHICLE

(51) International classification	:A01G0009140000, A01B0049060000, A01B0035080000, A01B0077000000, A01G0011000000
(31) Priority Document No	:NA
(32) Priority Date	:NA
(33) Name of priority country	:NA
(86) International Application No	:NA
Filing Date	:NA
(87) International Publication No	: NA
(61) Patent of Addition to Application Number	:NA
Filing Date	:NA
(62) Divisional to Application Number	:NA
Filing Date	:NA

(71)**Name of Applicant :**
1)NITTE MEENAKSHI INSTITUTE OF TECHNOLOGY
Address of Applicant :GOVINDAPURA, GOLLAHALLI, P B NO. 6429, YELAHANKA, BENGALURU- 560064, KARNATAKA, INDIA Karnataka India
(72)**Name of Inventor :**
1)LOKESH N
2)PRASHANTH N
3)MAHADEVA PRASAD
4)PURUSHOTHAMA G

(57) Abstract :
The invention relates to an integrated multi-utility agriculture vehicle. In one embodiment, the vehicle includes a frame having a height above a support surface. A disc cultivation unit for raising and turning the soil and also used to chop the unwanted weed from the crop, wherein the disc cultivation unit cultivates the soil which allows the crop to grow faster and bigger. A Tyne cultivator is coupled with the frame which is used to loosen up the soil instead of ripping deep through it. A plougher coupled to the frame used to deep ripping of the soil and prepares path to sow the seeds. A plurality of seed sower for storing the seeds in a funnel which is made up of sheet metal and allowing seeds to flow from funnel to the digged soil. A plurality of leveller attached at the rear end of the frame which is used to level up the land or to close the path which is created during cultivation to sow the seed. A plurality of wheel assemblies having a length and attached to the frame. The integrated multi-utility agriculture vehicle or machineries are reduce the human effort which is incorporated in a single attachment to perform multi-operations simultaneously. The integrated multi-utility agriculture vehicle performs all operations in less time and helps to get high yield and good productivity with low investment.

No. of Pages : 17 No. of Claims : 10

(12) PATENT APPLICATION PUBLICATION
(21) Application No.201941054028 A
(19) INDIA
(22) Date of filing of Application :26/12/2019
(43) Publication Date : 02/07/2021

(54) Title of the invention : FRICTIONLESS VERTICAL AXIS WIND MAGLEV TURBINE

(51) International classification	:H02K0007180000, F03D0003060000, F03D0009250000, F03D0080700000, F03D0007060000	(71)**Name of Applicant :** **1)NITTE MEENAKSHI INSTITUTE OF TECHNOLOGY** Address of Applicant :GOVINDAPURA, GOLLAHALLI, P B NO. 6429, YELAHANKA, BENGALURU- 560064 KARNATAKA, INDIA Karnataka India
(31) Priority Document No	:NA	(72)**Name of Inventor :**
(32) Priority Date	:NA	**1)DR. VINYAS M**
(33) Name of priority country	:NA	**2)DR. SUDHEER REDDY J**
(86) International Application No	:NA	**3)DR. BALACHANDRA P SHETTY**
Filing Date	:NA	**4)VIKRAM KEDAMBADI VASU**
(87) International Publication No	: NA	
(61) Patent of Addition to Application Number	:NA	
Filing Date	:NA	
(62) Divisional to Application Number	:NA	
Filing Date	:NA	

(57) Abstract :
The invention relates to a frictionless vertical axis Maglev Wind Turbine. In one embodiment the turbine includes a metal frame, a plurality of surfaces, a fixed base surface and a moving surface, the fixed base surface supported by the metal frame, and the moving surface including a blade assembly, a plurality of strong neodymium permanent magnets which are fixed to both the surfaces, above the bottom surface and below the top surfaces, a shaft is placed at the metal frame and is made to pass through the surfaces in the centre, wherein the moving surface including the blade assembly which is a rotating member and the base surface which is fixed, which are levitated with the help of the permanent magnets and a generator and the blade assembly are connected to the shaft. The magnetic levitation facilitates in employing the turbine blade to expel the air from the attic to cause speed and thereby generating electricity.

No. of Pages : 19 No. of Claims : 10

(12) PATENT APPLICATION PUBLICATION
(21) Application No.201941054029 A
(19) INDIA
(22) Date of filing of Application :26/12/2019
(43) Publication Date : 02/07/2021

(54) Title of the invention : SOLAR POWERED RICE PUFFING MACHINE

(51) International classification	:A23K0020147000, C12P0019040000, B82Y0030000000, C22B0003000000, C08L0097020000
(31) Priority Document No	:NA
(32) Priority Date	:NA
(33) Name of priority country	:NA
(86) International Application No	:NA
Filing Date	:NA
(87) International Publication No	: NA
(61) Patent of Addition to Application Number	:NA
Filing Date	:NA
(62) Divisional to Application Number	:NA
Filing Date	:NA

(71)**Name of Applicant :**
1)NITTE MEENAKSHI INSTITUTE OF TECHNOLOGY
Address of Applicant :NITTE MEENAKSHI INSTITUTE OF TECHNOLOGY, GOVINDAPURA, GOLLAHALLI, P B NO. 6429, YELAHANKA, BENGALURU- 560064, KARNATAKA, INDIA Karnataka India
(72)**Name of Inventor :**
1)DR. MADHUSUDHAN
2)DR. BALACHANDRA P SHETTY
3)PRAVEENA B A
4)SUJAN K S

(57) Abstract :
The invention relates to a solar powered rice puffing machine. In one embodiment the machine includes a cylindrical container having a base fitted in a table, a vane inside the body of the container and a pulley at the center of the container, a blower attached to the first side of the container and is designed to locate at the centre of the total height of the container, and a collecting tray attached to the second side of the container, the first side and the second side of the container are placed perpendicularly opposite to each other. An electric motor attached at the base of the container, the electric motor is connected to a shaft by the pulley of the container in order to revolve the vane to perform required operation. A gas burner placed under the container in order to generate the required amount of heat. During operation, kernels are introduced into the container from the top inlet and mix with the sand present inside the container thoroughly by the revolving vane with shaft to maintain uniform temperature throughout the mixture, wherein the mixing motion is achieved by running the motor connected to the shaft by the pulley using belt drive resulting in where the puffed rice being light in weight is drawn out by the blower from the first side and collected at the second side of the container using the collecting tray.

No. of Pages : 24 No. of Claims : 10

(12) PATENT APPLICATION PUBLICATION
(21) Application No.201941054030 A
(19) INDIA
(22) Date of filing of Application :26/12/2019
(43) Publication Date : 02/07/2021

(54) Title of the invention : REAL-TIME ONBOARD TRUCKLOAD WEIGHING SYSTEM

(51) International classification	:G01L0001220000, G01G0003140000, G01F0001280000, G01B0007160000, G01L0009000000	(71)**Name of Applicant :** **1)NITTE MEENAKSHI INSTITUTE OF TECHNOLOGY** Address of Applicant :GOVINDAPURA, GOLLAHALLI, P B NO. 6429, YELAHANKA, BENGALURU- 560064 KARNATAKA, INDIA Karnataka India
(31) Priority Document No	:NA	(72)**Name of Inventor :**
(32) Priority Date	:NA	**1)RAMESH BABU N**
(33) Name of priority country	:NA	**2)DR. VINYAS M**
(86) International Application No	:NA	**3)DR. KIRAN AITHAL S**
Filing Date	:NA	**4)MANJUNATH H N**
(87) International Publication No	: NA	
(61) Patent of Addition to Application Number	:NA	
Filing Date	:NA	
(62) Divisional to Application Number	:NA	
Filing Date	:NA	

(57) Abstract :
The invention relates to a weighing system mounted in a truck. In an embodiment, the system include four strain gauges are placed one each suspension of the truck, the strain gauges are configured in a Wheatstone bridge circuits in order measure very small and precise mechanical strain, the strain gauge change electrical resistance when it is marginally deformed by deflection of leaf springs, wherein the deformation yields a voltage signal which is proportional to the load, the voltage difference is fed as input to an amplifying analog-to-digital converter whose digitized output is fed to a micro-controller for processing and further provides the required load reading as an output.

No. of Pages : 19 No. of Claims : 7

(12) PATENT APPLICATION PUBLICATION
(21) Application No.201941054031 A
(19) INDIA
(22) Date of filing of Application :26/12/2019
(43) Publication Date : 02/07/2021

(54) Title of the invention : RANGE EXTENDER ENGINE FOR HYBRID ELECTRIC VEHICLES

(51) International classification	:B60W0020000000, B60W0010080000, B60W0010060000, B60W0010260000, B60W0020130000	(71)**Name of Applicant :** **1)NITTE MEENAKSHI INSTITUTE OF TECHNOLOGY** Address of Applicant :GOVINDAPURA, GOLLAHALLI, P B NO. 6429, YELAHANKA, BENGALURU- 560064 KARNATAKA, INDIA Karnataka India
(31) Priority Document No	:NA	(72)**Name of Inventor :**
(32) Priority Date	:NA	**1)KIRANA K K**
(33) Name of priority country	:NA	**2)DR. SUDHEER REDDY J**
(86) International Application No	:NA	**3)VIKRAM KEDAMBADI VASU**
Filing Date	:NA	
(87) International Publication No	: NA	
(61) Patent of Addition to Application Number	:NA	
Filing Date	:NA	
(62) Divisional to Application Number	:NA	
Filing Date	:NA	

(57) Abstract :
The invention relates to range extender engine for a hybrid electric vehicle drive. In an embodiment, the engine includes at least one electric motor for driving the motor vehicle, a battery pack where the motor gets the power and an internal combustion engine-generator unit as a range extender for charging the battery and/or for generating electrical energy for the at least one electric motor, wherein the coupled combustion engine which serves to extend the operating range.

No. of Pages : 17 No. of Claims : 10

(12) PATENT APPLICATION PUBLICATION
(21) Application No.201941054069 A
(19) INDIA
(22) Date of filing of Application :26/12/2019
(43) Publication Date : 02/07/2021

(54) Title of the invention : BLADE GUARD DEVICE TO SAFELY LOAD AND UNLOAD A SURGICAL SCALPEL

(51) International classification	:A61B0017321700, A61B0017321500, A61B0050000000, F26B0025000000, A61B0017321300
(31) Priority Document No	:NA
(32) Priority Date	:NA
(33) Name of priority country	:NA
(86) International Application No	:NA
Filing Date	:NA
(87) International Publication No	: NA
(61) Patent of Addition to Application Number	:NA
Filing Date	:NA
(62) Divisional to Application Number	:NA
Filing Date	:NA

(71)**Name of Applicant :**
1)M. S. Ramaiah University of Applied Sciences
Address of Applicant :University House, Gnanagangothri Campus, New BEL Road, M S R Nagar, Bangalore, Karnataka, INDIA - 560054. Karnataka India
(72)**Name of Inventor :**
1)Lavanya R
2)Kranti. K
3)Lohit. H. S
4)Saagar Bhargava
5)Gayathri. K

(57) Abstract :
Title: Blade Guard Device to Safely Load and Unload a Surgical Scalpel ABSTRACT A blade guard device comprising: an acrylic housing chamber along with a loading metal tray to hold the blade securely without exposing the blade to the external environment; the loading metal tray has a slot that allows the handle of the surgical scalpel to be inserted at a specific angle, wherein the blade guard device is used to safely load and unload a surgical scalpel to hold the blade securely for procedures without exposing the blade to the external environment. The blade guard device shows a new mechanism for loading and unloading of the surgical blade with the acrylic housing chamber that has a provision or space to insert the surgical blade. The metal tray of the blade guard device has the provision for the standard surgical handle to be inserted for easy mounting and unmounting of the blade without the need to manage the insertion of blade manually. The blade guard device eliminates the risk for blade related injuries, use of extra instruments and chances of transmission of diseases that are transmitted through blood and hence making this process a far more efficient and safer.

No. of Pages : 8 No. of Claims : 5

(12) PATENT APPLICATION PUBLICATION
(21) Application No.201941054070 A
(19) INDIA
(22) Date of filing of Application :26/12/2019
(43) Publication Date : 02/07/2021

(54) Title of the invention : HERBOSOMAL DRUG DELIVERY SYSTEM

(51) International classification	:A61K0036840000, A61K0009140000, A23L0033105000, A61K0009000000, A61K0036185000	(71)**Name of Applicant :** **1)M. S. Ramaiah University of Applied Sciences** Address of Applicant :University House, Gnanagangothri Campus, New BEL Road, M S R Nagar, Bangalore, Karnataka, INDIA - 560054. Karnataka India
(31) Priority Document No	:NA	(72)**Name of Inventor :**
(32) Priority Date	:NA	**1)Bharath S**
(33) Name of priority country	:NA	**2)Anbu J**
(86) International Application No	:NA	**3)Anup Siddesh Halvagal**
Filing Date	:NA	**4)Vijayanand Pujari**
(87) International Publication No	: NA	
(61) Patent of Addition to Application Number	:NA	
Filing Date	:NA	
(62) Divisional to Application Number	:NA	
Filing Date	:NA	

(57) Abstract :
Title: Herbosomal Drug Delivery System ABSTRACT A method of preparation of a herbosomes used as a Herbosomal Drug Delivery System comprising: drying and powdering a plant material Valeriana officinalis to obtain a Valeriana officinalis powder; sieving the Valeriana officinalis powder and filling the material retained desired weight into a Soxhlet apparatus and defatted using a petroleum ether; removing the petroleum ether and extracting the Valeriana officinalis powder using methanol and water as solvent to obtain an extracted Valeriana officinalis powder; extracting again the extracted Valeriana officinalis powder is at 60 for 6 hours and evaporating on a water bath placed in desiccator for 7 days to obtain a dry Valeriana officinalis powder; preparing a mixture of a dry Valeriana officinalis powder and a soya lecithin in a ratio of 1:2; dissolving the mixture of a dry Valeriana officinalis powder and a soya lecithin in Dichloromethane (DCM) to obtain a dissolved mixture of dry valeriana officinalis powder and soya lecithin; refluxing the dry valeriana officinalis powder and soya lecithin on water bath at 60 in a round bottom flask (RBF) to obtain a solution; evaporating the solution using a solvent evaporation in a rotary evaporator at 45 under vacuum to form a thin film; and rehydrating the formed thin film further with 6.8 pH phosphate buffer solution to obtain a herbosomes, wherein the herbosomes by solvent evaporation and thin film hydration method used as a Herbosomal Drug Delivery System for treatment of insomnia are the bilayered complex shows a better absorption and bioavailability.

No. of Pages : 22 No. of Claims : 5

(12) PATENT APPLICATION PUBLICATION
(21) Application No.201941054071 A
(19) INDIA
(22) Date of filing of Application :26/12/2019
(43) Publication Date : 02/07/2021

(54) Title of the invention : NOVEL BIO ACTIVE THEOBROMINE COMPOSITE RESIN

(51) International classification	:A61K0006000000, A61K0006083000, A61K0008190000, A61Q0011000000, A61K0006087000
(31) Priority Document No	:NA
(32) Priority Date	:NA
(33) Name of priority country	:NA
(86) International Application No	:NA
Filing Date	:NA
(87) International Publication No	: NA
(61) Patent of Addition to Application Number	:NA
Filing Date	:NA
(62) Divisional to Application Number	:NA
Filing Date	:NA

(71)**Name of Applicant :**
1)M. S. Ramaiah University of Applied Sciences
Address of Applicant :University House, Gnanagangothri Campus, New BEL Road, M S R Nagar, Bangalore, Karnataka, INDIA - 560054. Karnataka India
(72)**Name of Inventor :**
1)Pushpalatha C
2)Srikari S
3)Deveswaran Rajamanickam

(57) Abstract :
TITLE: Novel Bio Active Theobromine Composite Resin ABSTRACT A method of preparation of Bio Active Theobromine Composite Resin comprising: adding a therobromine to a Bis-GMA and a TEGDMA nanofiber to obtain an unpolymerized material; inserting the unpolymerized material between a two polyester strips over a glass mixing tablet; and polymerizing the polyester strips on both sides to obtain a Bio Active Theobromine Composite Resin, wherein the obtained Bio Active Theobromine Composite Resin has a re-mineralizing potential to reduce a frequency of fracture of a restorations and incidence of refilling of secondary caries formation.A method of application of Bio Active Theobromine Composite Resin on a dental cavity comprising: preparing a tooth by giving a local anesthesia to numb the tooth and area around it; etching the prepared tooth surface to remove a decay or cavity; cleaning and drying the etched surface; filling the etched cleaned and dried surface with the Bio Active Theobromine Composite Resin to fill the cavity; and curing the filled Bio Active Theobromine Composite Resin using light, wherein the filled Bio Active Theobromine Composite Resin is a material for patient with high caries group and also reduce the incidence of secondary caries formation due to its remineralization potential

No. of Pages : 13 No. of Claims : 7

(12) PATENT APPLICATION PUBLICATION
(21) Application No.201941054072 A
(19) INDIA
(22) Date of filing of Application :26/12/2019
(43) Publication Date : 02/07/2021

(54) Title of the invention : DENTAL DIGITAL IMAGE RECEPTOR HOLDER WITH DUAL AIMING RINGS FOR IMAGING

(51) International classification	:A61B0006140000, G03B0042040000, A61B0006000000, A61B0001240000, A61C0005900000
(31) Priority Document No	:NA
(32) Priority Date	:NA
(33) Name of priority country	:NA
(86) International Application No	:NA
Filing Date	:NA
(87) International Publication No	: NA
(61) Patent of Addition to Application Number	:NA
Filing Date	:NA
(62) Divisional to Application Number	:NA
Filing Date	:NA

(71)**Name of Applicant :**
1)M. S. Ramaiah University of Applied Sciences
Address of Applicant :University House, Gnanagangothri Campus, New BEL Road, M S R Nagar, Bangalore, Karnataka, INDIA - 560054. Karnataka India
(72)**Name of Inventor :**
1)Sujatha S
2)Tupakula Kumar Pavan
3)Nagaraju Rakesh

(57) Abstract :
Title: Dental Digital Image Receptor Holder with Dual Aiming Rings for Imaging ABSTRACT A dental digital image receptor holder with dual aiming rings comprising: a connector and a bite block made up of solid material to withstand the bite force applied during stabilization where a patient is going to bite to stabilize the holder during x-ray exposure; a film holding mechanism where a film is held parallel to the dual aiming rings and in the center of the dual aiming rings with the help of the connector and a bite block; a handle to stabilize the device during the exposure of the film and also helps in handling the device while placing and aligning the image receptor to the teeth of interest; and a dual aiming ring placed one each on right and left side of the face that helps in accurately align and expose the teeth of interest and the digital image receptor, wherein the dental digital image receptor holder with dual aiming rings is placed outside the mouth of the patients with narrow palate, palatal and who are unable to open the mouth widely due to trauma or infection.

No. of Pages : 15 No. of Claims : 8

(12) PATENT APPLICATION PUBLICATION
(21) Application No.201941054075 A
(19) INDIA
(22) Date of filing of Application :27/12/2019
(43) Publication Date : 02/07/2021

(54) Title of the invention : UNMANNED SURFACE VEHICLE WITH SATELLITE BASED FISH ZONE DETECTION

(51) International classification	:A01K0061600000, B63B0035000000, B63G0008000000, A63H0017000000, G01W0001020000	(71)**Name of Applicant :** **1)Teppala Vikranth** Address of Applicant :S/o Ajay Kumar Dr.No 2-61/1, Chinna Makannapalli, Neelavathi, Palasa, Srikakulam-532243, Andhra Pradesh, India Andhra Pradesh India
(31) Priority Document No	:NA	(72)**Name of Inventor :**
(32) Priority Date	:NA	**1)Teppala Vikranth**
(33) Name of priority country	:NA	**2)Killampalli Rajesh**
(86) International Application No	:NA	
Filing Date	:NA	
(87) International Publication No	: NA	
(61) Patent of Addition to Application Number	:NA	
Filing Date	:NA	
(62) Divisional to Application Number	:NA	
Filing Date	:NA	

(57) Abstract :
ABSTRACT: Title: Unmanned Surface Vehicle with Satellite based Fish Zone Detection The present disclosure proposes an unmanned surface vehicle design with satellite based fish zone detection. The unmanned surface vehicle design for fish zone detection comprises a hull support structure 104 with at least two floating members 106. The floating members 106 connected using plurality of support rings 105 are configured to house various components of the unmanned surface vehicle 100. The unmanned surface vehicle design with satellite based fish zone detection comprises a robust design that sustains heavy wind condition and rough weather and further comprises detection of fish cloud intensity using echo sensor. The unmanned surface vehicle aids to detect fish cloud intensity using an echo sensor at a potential fish zone at various depths.

No. of Pages : 29 No. of Claims : 10

(12) PATENT APPLICATION PUBLICATION
(21) Application No.201941054088 A
(19) INDIA
(22) Date of filing of Application :27/12/2019
(43) Publication Date : 02/07/2021

(54) Title of the invention : DEVICE FOR CONTROLLED-FORCE APPLICATION TO AID IN MOUTH OPENING FOR PATIENT WITH REDUCED MOUTH OPENING.

(51) International classification	:H04W0016260000, G02B0007000000, A61H0001000000, B25J0013020000, G06F0016901000
(31) Priority Document No	:NA
(32) Priority Date	:NA
(33) Name of priority country	:NA
(86) International Application No	:NA
Filing Date	:NA
(87) International Publication No	: NA
(61) Patent of Addition to Application Number	:NA
Filing Date	:NA
(62) Divisional to Application Number	:NA
Filing Date	:NA

(71)**Name of Applicant :**
1)VaatsalyaInventures Consultancy Solutions LLP
Address of Applicant :215 / 802, 7th B Cross, Shastry Nagar, Thyagarajanagar P.O., Bangalore - 560028 Karnataka India
(72)**Name of Inventor :**
1)Dr. Mamatha G.P.
2)Dr. Neetha Harisha
3)Ali I.M
4)Dr. Ankitha Jadhav
5)Swamy M.C.L
6)Abhishek Nagaraj

(57) Abstract :
A device configured to be used to improve mouth opening in patients affected by dysfunction related to reduced mouth opening. The device comprises of wedge-like inclines and fulcrum to physically apply force. The device further comprises of springs to provide additional force. The device is configured to enable the user to measure and limit force application on repeated attempts.

No. of Pages : 19 No. of Claims : 10

(12) PATENT APPLICATION PUBLICATION
(21) Application No.201941054127 A
(19) INDIA
(22) Date of filing of Application :27/12/2019
(43) Publication Date : 02/07/2021

(54) Title of the invention : CAPACITANCE BASED SPECIFIC GRAVITY MEASUREMENT OF LIQUID IN A LEAD ACID BATTERY

(51) International classification	:H01M0010060000, H01M0010480000, H01M0010420000, H01M0010120000, H01M0004140000	(71)**Name of Applicant :** **1)Robert Bosch Engineering and Business Solution Pvt. Ltd** Address of Applicant :Post Box No 3000, Hosur Road, Adugodi, Bangalore 560030, Karnataka, India Karnataka India **2)Robert Bosch GmbH**
(31) Priority Document No	:NA	(72)**Name of Inventor :**
(32) Priority Date	:NA	**1)Uday Haleangadi Prabhu**
(33) Name of priority country	:NA	**2)Shivanand Waliitagi**
(86) International Application No	:NA	**3)Shekhar Nandalal Tilve**
Filing Date	:NA	**4)Dhinesh Babu Narayanasamy**
(87) International Publication No	: NA	**5)Anoop Hebbandi Nanjundappa**
(61) Patent of Addition to Application Number	:NA	**6)Tejas Gopal**
Filing Date	:NA	**7)Theophilus Benjamin Dorairaj**
(62) Divisional to Application Number	:NA	
Filing Date	:NA	

(57) Abstract :
Capacitance based specific gravity measurement of liquid in a lead acid battery(10) is disclosed. A lead acid battery(10) comprises a housing filled with liquid of the lead acid battery(10), a specific gravity sense PCB(30) disposed in the lead acid battery liquid capable of measuring capacitance to enable determining specific gravity of the lead acid battery liquid, a battery management unit main PCB(20) accommodated in isolation from the lead acid battery liquid. Fig. 1

No. of Pages : 14 No. of Claims : 10

(12) PATENT APPLICATION PUBLICATION
(21) Application No.201941054128 A
(19) INDIA
(22) Date of filing of Application :27/12/2019
(43) Publication Date : 02/07/2021

(54) Title of the invention : A DEVICE AND METHOD TO MEASURE LIQUID FLOW RATE IN A PIPE

(51) International classification	:G01F0001000000, G01F0001660000, B08B0001000000, G01F0001740000, B05B0011000000	(71)**Name of Applicant :** **1)Robert Bosch Engineering and Business Solution Pvt. Ltd.** Address of Applicant :123, Industrial Layout, Hosur Road, Koramangala, Bangalore 560095, Karnataka, India Karnataka India **2)Robert Bosch GmbH**
(31) Priority Document No	:NA	(72)**Name of Inventor :**
(32) Priority Date	:NA	**1)Uday Prabhu Haleangadi**
(33) Name of priority country	:NA	**2)Madhu Shivakumaraswamy**
(86) International Application No	:NA	**3)Keerthy Moonjelil Karthikeyan**
Filing Date	:NA	**4)Jitin Kurian Kunnel**
(87) International Publication No	: NA	**5)Giridhara Baluvaneralu venkatakrishnaiah**
(61) Patent of Addition to Application Number	:NA	
Filing Date	:NA	
(62) Divisional to Application Number	:NA	
Filing Date	:NA	

(57) Abstract :
A device and method to measure liquid flow rate in a pipe is disclosed. The device(100) to measure liquid flow rate for a pipe comprises a head unit(10) capable of mounted on cut surface of the pipe(40), a PCB(20) fitted in the head unit(10), a pendulum(30) suspended from lower plane of the head unit(10) traversing through liquid flow area(50) in a manner that the pendulum(30) capable of being displaced by liquid flow in the pipe(40); Fig. 1

No. of Pages : 13 No. of Claims : 9

(12) PATENT APPLICATION PUBLICATION
(21) Application No.201941054129 A
(19) INDIA
(22) Date of filing of Application :27/12/2019
(43) Publication Date : 02/07/2021

(54) Title of the invention : AN EXHAUST GAS TREATMENT SYSTEM FOR PREVENTING UREA DEPOSITS ON INJECTOR TIP

(51) International classification	:F01N0003200000, F01N0011000000, F01P0003120000, F02M0026280000, F02D0041020000	(71)**Name of Applicant :** **1)Bosch Limited** Address of Applicant :Post Box No 3000, Hosur Road, Adugodi, Bangalore 560030, Karnataka, India Karnataka India **2)Robert Bosch GmbH**
(31) Priority Document No	:NA	(72)**Name of Inventor :**
(32) Priority Date	:NA	**1)Manvendra Singh**
(33) Name of priority country	:NA	**2)Prashant Gupta**
(86) International Application No	:NA	
Filing Date	:NA	
(87) International Publication No	: NA	
(61) Patent of Addition to Application Number	:NA	
Filing Date	:NA	
(62) Divisional to Application Number	:NA	
Filing Date	:NA	

(57) Abstract :
An exhaust gas after treatment system (100) for an internal combustion engine (102) is provided. The system (100) includes a dosing module (104) comprising an injector having a discharge opening and configured to inject a reducing agent into a duct of the exhaust gas after treatment system (100). The system (100) further includes a coolant circuit (106) comprising a delivery portion (12) that directs coolant from the internal combustion engine (102) to an inlet of a coolant passageway formed in the dosing module (104), and a return portion (14) that returns coolant from an outlet of the coolant passageway and returns it to the internal combustion engine (102). The system (100) includes a temperature sensor (108) placed at upstream of dosing module (104) of the engine and configured to acquire temperature of the exhaust gases in the exhaust gas after treatment system (100) and a flow control device (110) disposed in between the dosing module (104) and the coolant circuit (106). The flow control device (110) is configured to control coolant direction through the coolant circuit (106) based on the temperature of the exhaust gases in the exhaust gas after treatment system. The acquired temperature is used to trigger the flow control device (110) to control the direction of the coolant in the exhaust gas after treatment system (100). (Figure 1)

No. of Pages : 12 No. of Claims : 7

(12) PATENT APPLICATION PUBLICATION
(21) Application No.201941054137 A
(19) INDIA
(22) Date of filing of Application :27/12/2019
(43) Publication Date : 02/07/2021

(54) Title of the invention : NOVEL POLYMORPH OF LANOCONAZOLE HBR & IT'S USE IN THE PREPARATION OF PURE LANOCONAZOLE

(51) International classification	:A61K0031417800, C07D0409060000, A61K0009000000, C07C0059255000, C07F0001000000
(31) Priority Document No	:NA
(32) Priority Date	:NA
(33) Name of priority country	:NA
(86) International Application No	:NA
Filing Date	:NA
(87) International Publication No	: NA
(61) Patent of Addition to Application Number	:NA
Filing Date	:NA
(62) Divisional to Application Number	:NA
Filing Date	:NA

(71)**Name of Applicant :**
1)SMS PHARMACEUTICALS LTD
Address of Applicant :PLOT N072, H. NO.8-2-334/3 & 4 ROAD NO.5, OPP. SBI EXECUTIVE ENCLAVE, BANJARA HILLS, HYDERABAD, TELANGANA, INDIA-500034. Telangana India
(72)**Name of Inventor :**
1)VENKAT RAO SIRUGU BATTULA
2)VAMSI KRISHNA POTLURI
3)RAMESH BABU™POTLURI

(57) Abstract :
The present invention relates to novel crystalline polymorph of Lanoconazole HBr salt & its use in the preparation of pure Lanoconazole.

No. of Pages : 18 No. of Claims : 8

(12) PATENT APPLICATION PUBLICATION
(21) Application No.201941054148 A
(19) INDIA
(22) Date of filing of Application :27/12/2019
(43) Publication Date : 02/07/2021

(54) Title of the invention : METHOD AND SYSTEM FOR PROVIDING RIDE SHARE SERVICES

(51) International classification	:G01C0021340000, A63G0007000000, F41G0007220000, A63G0031160000, G06Q0050300000	(71)**Name of Applicant :** **1)Daimler AG** Address of Applicant :Stuttgart, Germany 70546. Germany (72)**Name of Inventor :** **1)Manjitpal Singh Birring**
(31) Priority Document No	:NA	
(32) Priority Date	:NA	
(33) Name of priority country	:NA	
(86) International Application No	:NA	
Filing Date	:NA	
(87) International Publication No	: NA	
(61) Patent of Addition to Application Number	:NA	
Filing Date	:NA	
(62) Divisional to Application Number	:NA	
Filing Date	:NA	

(57) Abstract :
The present disclosure relates to a method and a system for providing dynamic ride service. A request from a ride seeker is received by a ride sharing system to avail a ride service from a source location to a destination location. The system identifies a ride service for the ride seeker based on at least one of a shortest route and fastest route to the destination location by using real-time trip information provided to the ride sharing system by a number of ride providers. Thereafter, the system provides information about identified ride service to the ride seeker for real-time ride sharing. FIG. 1

No. of Pages : 21 No. of Claims : 10

(12) PATENT APPLICATION PUBLICATION
(19) INDIA
(22) Date of filing of Application :27/12/2019

(21) Application No.201941054155 A
(43) Publication Date : 02/07/2021

(54) Title of the invention : AN ELECTROMAGNETIC FLOWMETER

(51) International classification	:G01F0001580000, G01F0001600000, E21B0047100000, G01F0001660000, G01F0001000000	(71)**Name of Applicant :** **1)ABB SCHWEIZ AG** Address of Applicant :Brown Boveri Strasse 6, CH-5400 Baden, Switzerland. Switzerland
(31) Priority Document No	:NA	(72)**Name of Inventor :** **1)Subhashish Dasgupta**
(32) Priority Date	:NA	
(33) Name of priority country	:NA	
(86) International Application No	:NA	
Filing Date	:NA	
(87) International Publication No	: NA	
(61) Patent of Addition to Application Number	:NA	
Filing Date	:NA	
(62) Divisional to Application Number	:NA	
Filing Date	:NA	

(57) Abstract :
An electromagnetic flowmeter (100) for monitoring a flow rate of a fluid is disclosed. The electromagnetic flowmeter (100) includes a conduit (110), and an electromagnetic assembly (120) coupled to the conduit (110) to generate a magnetic field inside the conduit (110). The electromagnetic flowmeter (100) further includes a ring assembly (160) to modify a velocity profile of the fluid arranged on an inner liner wall (112) of the conduit 110. Also, a position of the ring assembly 160 is adjustable along the inner liner wall (112) to varyingly reform the velocity profile of the fluid. Moreover, the electromagnetic flowmeter (100) includes a pair of electrodes (140) mounted to the conduit (110) to detect induced voltage generated within the reformed fluid due to the magnetic field. The flow rate of the fluid is determined based on the induced voltage. FIG. 2A

No. of Pages : 25 No. of Claims : 10

(12) PATENT APPLICATION PUBLICATION
(19) INDIA
(22) Date of filing of Application :27/12/2019
(21) Application No.201941054164 A
(43) Publication Date : 02/07/2021

(54) Title of the invention : MOSQUITO REPELLENT COMPROIL 2

(51) International classification	:H04N0021262000, A63H0003520000, F24C0005000000, G01R0021080000, A45F0003520000	(71)**Name of Applicant :** **1)T Bhoomaiah Chary** Address of Applicant :3-5-50, KOTAGALLY (VARNI ROAD), NIZAMABAD - 503 001, TELANGANA, INDIA. Telangana India
(31) Priority Document No	:NA	(72)**Name of Inventor :**
(32) Priority Date	:NA	**1)T Bhoomaiah Chary**
(33) Name of priority country	:NA	
(86) International Application No	:NA	
Filing Date	:NA	
(87) International Publication No	: NA	
(61) Patent of Addition to Application Number	:NA	
Filing Date	:NA	
(62) Divisional to Application Number	:NA	
Filing Date	:NA	

(57) Abstract :
Abstract: Mosquito Repellent Camproil 2. comprising This liquid pore some drops in the total house at the corners of hall, bed rooms, kitchen, store room, bath rooms and waranda and out side the near of house it gives protection from mosquito biting to us nearly 8 hours to 36 hours continuously it works to protect the Mosquito biting, at the condition of room circumferences. And stay away from diseases. Safe and convenient Types: Chikungunya, Dengue, malaria controls, it is low cost. And no need any machines and any electrical power to use it.

No. of Pages : 14 No. of Claims : 10

(12) PATENT APPLICATION PUBLICATION
(21) Application No.201941054202 A
(19) INDIA
(22) Date of filing of Application :27/12/2019
(43) Publication Date : 02/07/2021

(54) Title of the invention : A DEVICE TO COLLECT WASTE FROM ROAD SURFACE

(51) International classification	:A01K0001015000, A61G0001040000, C02F0001140000, B09B0003000000, A61K0035740000
(31) Priority Document No	:NA
(32) Priority Date	:NA
(33) Name of priority country	:NA
(86) International Application No	:NA
Filing Date	:NA
(87) International Publication No	: NA
(61) Patent of Addition to Application Number	:NA
Filing Date	:NA
(62) Divisional to Application Number	:NA
Filing Date	:NA

(71)**Name of Applicant :**
1)MR. N. JAYAKUMAR
Address of Applicant :DEPARTMENT OF MECHANICAL ENGINEERING , BANNARI AMMAN INSTITUTE OF TECHNOLOGY, SATHYAMANGALAM-638401, TAMILNADU, INDIA. Tamil Nadu India
2)MR. V. SURESH
3)DR.G. SENTHIKUMAR
4)MR. VINOTHKUMAR
5)R. P. SHANMUGAPRAVEEN
(72)**Name of Inventor :**
1)MR. N. JAYAKUMAR
2)MR. V. SURESH
3)DR.G. SENTHIKUMAR
4)MR. VINOTHKUMAR
5)R. P. SHANMUGAPRAVEEN

(57) Abstract :
Litter consists of waste products that have been disposed improperly, without consent, at an inappropriate location. Litter means to drop and leave objects, often man-made, such as aluminum cans, cardboard boxes or plastic bottles on the ground and leave them there indefinitely or for others to dispose of as opposed to disposing of them properly. It is a human impact on the environment and remains a serious environmental issue in many countries. Litter can exist in the environment for long periods of time before degrading and be transported large distances into the world's oceans. Litter can affect the quality of life. Litter can be in any type like dry leaves, used papers, paper cups and tin. To collect those litters in the. college road surface, more number people to employ and collect those litters. To overcome that problem, this project has been made. By using the litter collector vehicle, it can collect all kind of litters.

No. of Pages : 14 No. of Claims : 3

(12) PATENT APPLICATION PUBLICATION
(19) INDIA
(22) Date of filing of Application :27/12/2019
(21) Application No.201941054203 A
(43) Publication Date : 02/07/2021

(54) Title of the invention : METHOD AND DEVICE FOR RENDERING OBJECT DETECTION GRAPHICS ON IMAGE FRAMES

(51) International classification	:G06K0009000000, G06K0009620000, G06K0009460000, G06T0007246000, G06T0011400000
(31) Priority Document No	:NA
(32) Priority Date	:NA
(33) Name of priority country	:NA
(86) International Application No	:NA
Filing Date	:NA
(87) International Publication No	: NA
(61) Patent of Addition to Application Number	:NA
Filing Date	:NA
(62) Divisional to Application Number	:NA
Filing Date	:NA

(71)**Name of Applicant :**
1)WIPRO LIMITED
Address of Applicant :Doddakannelli, Sarjapur Road, Bangalore 560035 Karnataka India
(72)**Name of Inventor :**
1)KODAVALLA VIJAY KUMAR
2)VENUMADHAV CHITTAPRAGADA HANUMANTHA RAO

(57) Abstract :
ABSTRACT Object detection graphics are rendered on image frames, by receiving (708) an object detection information for an image frame. The object detection information includes bounding box data and a class label data associated with an object in the image frame. A first value (710) for each pixel in a first set of pixels associated with a bounding box (400) for the object is determined and a second value (810) for each pixel in a second set of pixels associated with a class label (600) for the object is determined. The values (712) for each of the first set of pixels are modifyied based on the associated first value to render the bounding box (400) on the image frame and modifying values (714) for each of the second set of pixels based on the associated second value to render the class label (600) on the image frame. Figure 7

No. of Pages : 50 No. of Claims : 10

(12) PATENT APPLICATION PUBLICATION
(21) Application No.201941054219 A
(19) INDIA
(22) Date of filing of Application :27/12/2019
(43) Publication Date : 02/07/2021

(54) Title of the invention : METHODS AND SYSTEMS FOR MANAGING LOCKING/UNLOCKING OF DOORS OF AN AUTOMOBILE •

(51) International classification	:G07C0009000000, B60R0025100000, E05B0077120000, B62D0015020000, E05F0015430000
(31) Priority Document No	:NA
(32) Priority Date	:NA
(33) Name of priority country	:NA
(86) International Application No	:NA
Filing Date	:NA
(87) International Publication No	: NA
(61) Patent of Addition to Application Number	:NA
Filing Date	:NA
(62) Divisional to Application Number	:NA
Filing Date	:NA

(71)**Name of Applicant :**
1)Mahindra & Mahindra Ltd.
Address of Applicant :Mahindra & Mahindra Ltd., Mahindra Research Valley, Mahindra World City, Plot No:41/1, Anjur P.O. Chengalpattu, Kanchipuram District, Tamilnadu, India-603004 Tamil Nadu India
(72)**Name of Inventor :**
1)PRABHAKARAN ARUMUGAM
2)KARTHIKEYAN E
3)KANNAN GOUNDER
4)KARTHIKEYAN SAMPATH
5)SHREEKANT SRIVASTAVA
6)SHRINIVAS KULKARNI

(57) Abstract :
ABSTRACT Methods and systems for managing locking/unlocking of doors of an automobile. Embodiments disclosed herein relate to vehicle protection systems, and more particularly to managing locking/unlocking of doors of an automobile/vehicle based on obstacles for preventing collision while opening the door(s) when the vehicle is stationary. A method disclosed herein includes detecting obstacle(s), which is in proximity to at least one door of an automobile. The method further includes locking doors of the automobile on detecting the obstacle(s). The method further includes unlocking the doors of the automobile when the obstacle moves away from the door of the automobile. FIG. 2

No. of Pages : 25 No. of Claims : 12

(12) PATENT APPLICATION PUBLICATION
(21) Application No.201941054226 A
(19) INDIA
(22) Date of filing of Application :27/12/2019
(43) Publication Date : 02/07/2021

(54) Title of the invention : A SALVAGING METHOD FOR A WORKPIECE

(51) International classification	:B22F0003240000, B22F0003105000, B23K0026030000, C08K0005000000, G06F0011070000	(71)**Name of Applicant :** **1)Mahindra & Mahindra Limited** Address of Applicant :Mahindra Research Valley, Mahindra World City, Plot No: 41/1, P.O. Anjur, Chengalpattu , Dist. Kancheepuram Tamil Nadu India
(31) Priority Document No	:NA	(72)**Name of Inventor :**
(32) Priority Date	:NA	**1)MANOJ KAMBLI**
(33) Name of priority country	:NA	
(86) International Application No	:NA	
Filing Date	:NA	
(87) International Publication No	: NA	
(61) Patent of Addition to Application Number	:NA	
Filing Date	:NA	
(62) Divisional to Application Number	:NA	
Filing Date	:NA	

(57) Abstract :
A SALVAGING METHOD FOR A WORKPIECE The present disclosure relates to a salvaging method for workpiece in general and in particular to a rejected gear spline having spline errors therein. The salvaging method of the present invention is an acid machining process that facilitates metal removal from internal and external gear teeth of the gear in a controlled manner to obtain desired size of gears after heat treatment in order to obtain desired size in terms of Diameter over pin (DOP), Diameter inside pin (DIP) and Span Size (SS). FIG. 1 (for publication)

No. of Pages : 13 No. of Claims : 9

(12) PATENT APPLICATION PUBLICATION
(21) Application No.201941054233 A
(19) INDIA
(22) Date of filing of Application :27/12/2019
(43) Publication Date : 02/07/2021

(54) Title of the invention : IDUC-DOOR DIVICE: INTELLIGENT DEVICE FOR UNLOCKING CAR DOOR

(51) International classification	:E05B0019200000, E05B0063000000, B60R0025021000, H01F0007020000, B60R0025240000
(31) Priority Document No	:NA
(32) Priority Date	:NA
(33) Name of priority country	:NA
(86) International Application No	:NA
Filing Date	:NA
(87) International Publication No	: NA
(61) Patent of Addition to Application Number	:NA
Filing Date	:NA
(62) Divisional to Application Number	:NA
Filing Date	:NA

(71)**Name of Applicant :**
1)DR.P.GANESAN
Address of Applicant :SRI INDU COLLEGE OF ENGINEERING AND TECHNOLOGY ,SHERIGUDA ,VILLAGE, IIBRAHIMPATTANAM, R.R.DISTRICT, HYDERABAD-501510, INDIA. e-mail: pganesh1982@gmail.com mo no:9894107992 Telangana India
2)DR.S.JOESPH DOMINIC VIJAYAKUMAR
3)DR.A.ANBARASU
4)DR.K.VETRIVEL KUMAR
5)DR.S.SRIDHAR
6)DR.S.PAULSINGARAYAR
(72)**Name of Inventor :**
1)DR.P.GANESAN
2)DR.S.JOESPH DOMINIC VIJAYAKUMAR
3)DR.A.ANBARASU
4)DR.K.VETRIVEL KUMAR
5)DR.S.SRIDHAR
6)DR.S.PAULSINGARAYAR

(57) Abstract :
IDUC-Door Divice: INTELLIGENT DEVICE FOR UNLOCKING CAR DOOR ABSTRACT My Invention IDUC-Door Divice • is A device is provided for the unlocking of car doors despite the existence of anti-theft devices such as an inner shell. The device is bent in such a way so as to circumvent the inner shell placed in car doors by manufacturers which prevent the use of other door unlocking devices. The device also is bent in such a way so as to unlock a car door despite the existence of anti-theft devices such as plastic coating on the locking bar that prevents other earlier devices from being used. The device is a continuous metallic rod bent at precise angles and at precise lengths so as to take advantage of the spaces in between the window and the outer shell, the hole within the inner shell, and the distance between the hole and the inner shell and the locking device. The device is constructed very efficiently and cheaply.

No. of Pages : 26 No. of Claims : 9

(12) PATENT APPLICATION PUBLICATION
(21) Application No.201941054245 A
(19) INDIA
(22) Date of filing of Application :27/12/2019
(43) Publication Date : 02/07/2021

(54) Title of the invention : DIRECT VIEW LED DISPLAY SYSTEM

(51) International classification	:G09G0003320000, H05B0033080000, G09G0003200000, G09F0009330000, G09G0003323300	(71)**Name of Applicant :** **1)MAGANTI VENKATA RAMANA RAO** Address of Applicant :FLAT NO. 302, JYOTHI NEST, ROAD NO. 2, BANJARA HILLS, HYDERABAD Telangana India **2)VENKATA RAM ATLURI**
(31) Priority Document No	:NA	
(32) Priority Date	:NA	(72)**Name of Inventor :**
(33) Name of priority country	:NA	**1)MAGANTI VENKATA RAMANA RAO**
(86) International Application No	:NA	**2)VENKATA RAM ATLURI**
Filing Date	:NA	
(87) International Publication No	: NA	
(61) Patent of Addition to Application Number	:NA	
Filing Date	:NA	
(62) Divisional to Application Number	:NA	
Filing Date	:NA	

(57) Abstract :
A LED display system / Direct View LED system/TV with specific arrangement of individual discrete Red, Green and Blue light elements of flip chip micro/mini LEDs / Chip on Board LEDs and any other type of LEDs and associated hardware, firmware, software and pixel mapping techniques in a LED display system / Direct View LED system/TV with less number of LEDs and associated active and passive components (reduction of the hardware resources to the extent 60% or more) and augmented by programmable virtualization techniques using either Common Cathode or Common Anode LED drivers.

No. of Pages : 30 No. of Claims : 11

(12) PATENT APPLICATION PUBLICATION
(19) INDIA
(22) Date of filing of Application :27/12/2019

(21) Application No.201941054251 A
(43) Publication Date : 02/07/2021

(54) Title of the invention : AN IMPROVED PROCESS FOR THE PREPARATION OF 4-({(1R)-2-[5-(2-FLUORO-3-METHOXYPHENYL)-3-{[2-FLUORO-6-(TRIFLUOROMETHYL)PHENYL]METHYL}-4-METHYL-2,6-DIOXO-3,6-DIHYDROPYRIMIDIN-1(2H)-YL]-1-PHENYLETHYL}AMINO)BUTANOIC ACID AND ITS PHARMACEUTICALLY ACCEPTABLE SALTS

(51) International classification	:C07D0417100000, C07D0401100000, A61K0045060000, C07D0409060000, C07D0413060000
(31) Priority Document No	:NA
(32) Priority Date	:NA
(33) Name of priority country	:NA
(86) International Application No	:NA
Filing Date	:NA
(87) International Publication No	: NA
(61) Patent of Addition to Application Number	:NA
Filing Date	:NA
(62) Divisional to Application Number	:NA
Filing Date	:NA

(71)**Name of Applicant :**
1)MSN Laboratories Private Limited, R&D Center
Address of Applicant :MSN Laboratories Private Limited, R&D Center Plot No. 12, Phase-IV, Sy No. 119 to 140, 258, 275 to 280, IDA, Pashamylaram (Vil), Patancheru (Mdl), Sangareddy (Dist), Telangana, India - 502307. Telangana India
(72)**Name of Inventor :**
1)Srinivasan Thirumalai Rajan
2)Sajja Eswaraiah
3)Ghojala Venkat Reddy
4)Mallam Venkataiah

(57) Abstract :
_An improved process for the preparation of 4-({(1R)-2-[5-(2-fluoro-3-methoxyphenyl)-3-{[2-fluoro-6-(trifluoromethyl)phenyl]methyl}-4-methyl-2,6-dioxo-3,6-dihydropyrimidin-1(2H)-yl]-1-phenylethyl}amino)butanoic acid and its5 pharmaceutically acceptable saltsThe present invention relates to an improved process for the preparation of 4-({(1R)-2-[5-(2-fluoro-3-methoxyphenyl)-3-{[2-fluoro-6-(trifluoromethyl)phenyl]methyl}-4-methyl-2,6-dioxo-3,6-dihydropyrimidin-1(2H)-yl]-1-phenylethyl}amino)butanoic acid of formula (I)10 or its pharmaceutically acceptable salts. The compound of formula (I) is represented by thefollowing structural formula_15

No. of Pages : 28 No. of Claims : 10

(12) PATENT APPLICATION PUBLICATION
(19) INDIA
(22) Date of filing of Application :27/12/2019
(21) Application No.201941054259 A
(43) Publication Date : 02/07/2021

(54) Title of the invention : IDENTIFYING ORIGIN AND FEEDBACK OF A MESSAGE ON AN ELECTRONIC DEVICE

(51) International classification	:H04L0029060000, G06F0003048500, G06F0003048800, G06F0003048100, G06F0003048200
(31) Priority Document No	:NA
(32) Priority Date	:NA
(33) Name of priority country	:NA
(86) International Application No	:NA
Filing Date	:NA
(87) International Publication No	: NA
(61) Patent of Addition to Application Number	:NA
Filing Date	:NA
(62) Divisional to Application Number	:NA
Filing Date	:NA

(71)**Name of Applicant :**
1)Samsung Electronics Co., Ltd.
Address of Applicant :129, Samsung-ro, Yeongtong-gu, Suwon-si, Gyeonggi-do, 443-742, Republic of Korea Republic of Korea

(72)**Name of Inventor :**
1)DHAMARAGUNTA, Sreenivasa
2)NAGARAJU, Sunil Kumar
3)BYADGI, Chandrashekhar

(57) Abstract :
The present disclosure describes methods for identifying origin and feedback of a message on an electronic device & the electronic devices thereof. In accordance with example embodiments, a method of identifying origin of a message on an electronic device includes receiving a user input indicative of sending a content to at least one recipient electronic device within a messaging application; detecting the content is composed within the messaging application; in response to the detecting, generating an identification header based on a first information associated with the electronic device and a second information associated with the content; appending the identification header to a message comprising the content and a message header; sending the message from the messaging application to the at least one recipient electronic device such that origin of the message is identified from the identification header.

No. of Pages : 40 No. of Claims : 36

(12) PATENT APPLICATION PUBLICATION
(21) Application No.201941054262 A
(19) INDIA
(22) Date of filing of Application :27/12/2019
(43) Publication Date : 02/07/2021

(54) Title of the invention : A PERORAL DELIVERY SYSTEM CONTAINING BISPHOSPHONATE DRUG FOR TREATMENT OF OSTEOPOROSIS

(51) International classification	:A61K0009000000, A61K0031663000, A61K0047120000, A61K0031675000, A61K0009700000
(31) Priority Document No	:NA
(32) Priority Date	:NA
(33) Name of priority country	:NA
(86) International Application No	:NA
Filing Date	:NA
(87) International Publication No	: NA
(61) Patent of Addition to Application Number	:NA
Filing Date	:NA
(62) Divisional to Application Number	:NA
Filing Date	:NA

(71)**Name of Applicant :**
1)M. S. Ramaiah University of Applied Sciences
Address of Applicant :University House, Gnanagangothri Campus, New BEL Road, M S R Nagar, Bangalore, Karnataka, INDIA - 560054. Karnataka India
(72)**Name of Inventor :**
1)Bharath S
2)Anbu J
3)Mukul K Khandelwal

(57) Abstract :
Title: A Peroral Delivery System containing Bisphosphonate drug for Treatment of Osteoporosis ABSTRACT A method of preparation of a Drug standardization by HPLC method used as a Peroral Delivery System comprising: analysing a risedronate sodium by mobile phase as buffer solution (pH 4.5) and acetonitrile in the ratio of 90:10 v/v is selected as the mobile phase and the analysis is performed on Sunfire column C18 (4.6 x 250 mm, 5 µm) at 25.4 to obtain an acceptable system suitability parameter; maintaining a flow rate of the mobile phase at 1 ml/min and response of the acceptable system suitability parameters is monitored at 262 nm with a run time of 07 minutes; and obtaining a chromatogram of the acceptable system suitability parameters using a High-Performance Thin Layer Chromatography (HPTLC) method for a determination of risedronate drug and a retention time at 3.427 ± 0.02 min, wherein the Drug standardization by HPLC method used as a Peroral Delivery System is a sublingual spray formulation of bisphosphonate drug Risedronate sodium using mucoadhesive polymers Pullulan gum and HPMC E5 by central composite optimization method for treating Osteoporosis.

No. of Pages : 29 No. of Claims : 2

(12) PATENT APPLICATION PUBLICATION
(21) Application No.201941054263 A
(19) INDIA
(22) Date of filing of Application :27/12/2019
(43) Publication Date : 02/07/2021

(54) Title of the invention : NANOCOMPOSITE FUNCTIONALIZED POLYMERIC SCAFFOLD FOR SKIN TISSUE

(51) International classification	:A61L0027560000, A61L0027520000, A61L0027380000, A61L0027460000, C02F0011200000
(31) Priority Document No	:NA
(32) Priority Date	:NA
(33) Name of priority country	:NA
(86) International Application No	:NA
Filing Date	:NA
(87) International Publication No	: NA
(61) Patent of Addition to Application Number	:NA
Filing Date	:NA
(62) Divisional to Application Number	:NA
Filing Date	:NA

(71)**Name of Applicant :**
1)M. S. Ramaiah University of Applied Sciences
Address of Applicant :University House, Gnanagangothri Campus, New BEL Road, M S R Nagar, Bangalore, Karnataka, INDIA - 560054. Karnataka India
(72)**Name of Inventor :**
1)Dhrubojyoti Mukherjee
2)Kamnoore Devanand Jagannath
3)Damodar Nayak
4)Parsuraman P

(57) Abstract :
Title: Nanocomposite Functionalized Polymeric Scaffold for Skin Tissue ABSTRACT A method of preparation of a hydrogel scaffold or a nanocomposite Functionalized Polymeric Scaffold comprising: adding a 0.5 g of a hydroxyapatite nanoparticles ,1.5 g of a thiolated chitosan into 40 ml of 2 % of acetic acid and a 3.3 ml of a propylene glycol to form a first mixture solution; adding a 1.5 g of thiolated eudragit into 30 ml of 1 % of a sodium hydroxide solution and 3 ml of a diethyl phthalate as a plasticizer to form a second mixture solution; stirring both the first reaction mixture and the second reaction mixture separately at 1000 rpm for about 1 hour; adding 1.5 g of a polyethylene glycol solution and a 1.5 g of thiolated eudragit to a thiolated chitosan solution to obtain a third reaction mixture; stirring all the reaction mixtures further for 4-5 hours to obtain a viscous mixture; pouring the viscous mixture into a mould with a flat surface; and freezing the mould in a freezer for freeze thawing process for 6-7 consecutive cycles to form a hydrogel scaffold; wherein the form a hydrogel scaffold exhibited a significant rate of wound healing and re-epithelialization within a period of 15 days confirming the potential application of the developed scaffold as a skin tissue engineering material.

No. of Pages : 30 No. of Claims : 7

(12) PATENT APPLICATION PUBLICATION
(21) Application No.201941054264 A
(19) INDIA
(22) Date of filing of Application :27/12/2019
(43) Publication Date : 02/07/2021

(54) Title of the invention : ESTHETIC STRIPS FOR SELECTION ANTERIOR TEETH IN EDENTULOUS PATIENTS

(51) International classification	:H01L0029660000, B29C0065000000, A61K0033420000, H01J0037220000, A61N0001362000
(31) Priority Document No	:NA
(32) Priority Date	:NA
(33) Name of priority country	:NA
(86) International Application No	:NA
Filing Date	:NA
(87) International Publication No	: NA
(61) Patent of Addition to Application Number	:NA
Filing Date	:NA
(62) Divisional to Application Number	:NA
Filing Date	:NA

(71)**Name of Applicant :**
1)M. S. Ramaiah University of Applied Sciences
Address of Applicant :University House, Gnanagangothri Campus, New BEL Road, M S R Nagar, Bangalore, Karnataka, INDIA - 560054. Karnataka India
(72)**Name of Inventor :**
1)Krishna Ravishankar
2)Ummehani Shaien
3)Singh Varshashree
4)Singh Akriti

(57) Abstract :
ESTHETIC STRIPS FOR SELECTION ANTERIOR TEETH IN EDENTULOUS PATIENTS ABSTRACT A method of preparation of artificial anterior teeth using esthetic strips comprising: preparing a preliminary alginate impression and pouring preliminary working models in dental stone; fabricating a custom impression tray from the obtained preliminary model and filled a PMMA (Poly(Methyl Methacrylate)) polymer to obtain a final impression using an elastomeric material; pouring the final impression in dental stone to obtain a master cast for denture construction and making a record bases from unfilled PMMA (Poly(Methyl Methacrylate)) and adding a wax rim; determining jaw relations and esthetic strip position for selection anterior teeth in final denture using the combination of record base and wax rim that serves as a trial denture; and mounting the master casts on an articulator to capture patient™s upper and lower jaw relationship and the esthetic strip are selected according to requirements of patient and set into the wax rim,wherein the esthetic and functional positions of the esthetic strip are verified by inserting the record bases and wax rims and altered for different shapes and sizes.

No. of Pages : 14 No. of Claims : 2

(12) PATENT APPLICATION PUBLICATION
(21) Application No.201941054265 A
(19) INDIA
(22) Date of filing of Application :27/12/2019
(43) Publication Date : 02/07/2021

(54) Title of the invention : ANTIFUNGAL TRANUNGUAL NANOMIEMGEL FOR ONYCHOMYCOSIS

(51) International classification	:A61K0009107000, A61K0009000000, A61K0047100000, A61K0047320000, A61K0047340000	(71)**Name of Applicant :** **1)M. S. Ramaiah University of Applied Sciences** Address of Applicant :University House, Gnanagangothri Campus, New BEL Road, M S R Nagar, Bangalore, Karnataka, INDIA - 560054. Karnataka India
(31) Priority Document No	:NA	(72)**Name of Inventor :**
(32) Priority Date	:NA	**1)Basavaraj B. V.**
(33) Name of priority country	:NA	**2)Avinash Anand**
(86) International Application No	:NA	
Filing Date	:NA	
(87) International Publication No	: NA	
(61) Patent of Addition to Application Number	:NA	
Filing Date	:NA	
(62) Divisional to Application Number	:NA	
Filing Date	:NA	

(57) Abstract :
14 Title: ANTIFUNGAL TRANUNGUAL NANOMIEMGEL FOR ONYCHOMYCOSIS ABSTRACT The method of preparation of a antifungal tranungual nanomiemgel (NMG) using a voriconazole loaded nanomicelles(NM) and a voriconazole loaded nanoemulsion(NEM) comprising: soaking a 1.5% of carbopol 940 gelling agent overnight in water to form lump and bubble free gel ;adding a penetration enhancer of a 5 % of thioglycolic acid and a 5 % of to the gel under gentle stirring; adding a bioadhesive polymer of 3% hydroxyethyl cellulose to the gel for better adhesiveness and viscosity of the gel;adjusting the pH of the gel using triethanolamine of pH 7 to a neutral range to form a bioadhesive gel; and adding a 25% of a voriconazole loaded nanomicelles and a 25% of a voriconazole loaded nanoemulsion to the bioadhesive gel under gentle stirring to form a antifungal tranungual nanomiemgel, wherein the antifungal tranungual nanomiemgel (NMG) is a topical bioadhesive Non-toxic and non-irritant drug used for the treatment of onychomycosis that enhances contact time of the formulation to the target area leading to maximum drug permeation with multi path absorption mechanisms.

No. of Pages : 24 No. of Claims : 7

(12) PATENT APPLICATION PUBLICATION
(19) INDIA
(22) Date of filing of Application :27/12/2019
(21) Application No.201941054266 A
(43) Publication Date : 02/07/2021

(54) Title of the invention : ELECTRICALLY DRIVEN AUTOMATED SALINE DISPENSER

(51) International classification	:A61M0003020000, A61C0017020000, A61C0005400000, A61M0005190000, A61K0033140000
(31) Priority Document No	:NA
(32) Priority Date	:NA
(33) Name of priority country	:NA
(86) International Application No	:NA
Filing Date	:NA
(87) International Publication No	: NA
(61) Patent of Addition to Application Number	:NA
Filing Date	:NA
(62) Divisional to Application Number	:NA
Filing Date	:NA

(71)**Name of Applicant :**
1)M. S. Ramaiah University of Applied Sciences
Address of Applicant :University House, Gnanagangothri Campus, New BEL Road, M S R Nagar, Bangalore, Karnataka, INDIA - 560054. Karnataka India
(72)**Name of Inventor :**
1)Vineeth Kumar K
2)Nivaskumar G A
3)Praveen N
4)Rashmi Ashok
5)Ritika Jeenoor
6)Sahana L
7)Kavitha Prasad
8)Ranganath K
9)Shwetha V

(57) Abstract :
Title: Electrically driven automated saline dispenser ABSTRACT An electrically driven automated saline dispenser comprising: a peristaltic pump unit with inlet tube, flexible tube (hose) and an outlet tube with high resistance to abrasion used for pumping a saline fluid from one zone to another without any obstruction; a saline dispenser unit with a saline fluid which is a salt solution of purified water that flow through a inlet tube of the peristaltic pump unit; a rotary cutting unit with a metal conduit on handpiece attached to the outlet tube of the peristaltic pump unit directed to the surgical field; and a power supply unit to activate the peristaltic pump unit resulting in dispensing the saline fluid through a tube during osteotomy, wherein the electrically driven automated saline dispenser is used to reduce excessive heat resulting in thermal osteonecrosis which mechanically weakens the bone during osteotomy without any assistance. The peristaltic pump unit is a 6V DC motor with 5000 rpm which runs with the help of power supply unit of 12V 1A adaptor that converts AC into DC.

No. of Pages : 13 No. of Claims : 3

(12) PATENT APPLICATION PUBLICATION
(21) Application No.201941054267 A
(19) INDIA
(22) Date of filing of Application :27/12/2019
(43) Publication Date : 02/07/2021

(54) Title of the invention : AN ADAPTIVE SELF LACING FOOTWEAR

(51) International classification	:A43B0019000000, A43C0011000000, A43B0003120000, A43B0001000000, A43B0003000000	(71)**Name of Applicant :** **1)M. S. Ramaiah University of Applied Sciences** Address of Applicant :University House, Gnanagangothri Campus, New BEL Road, M S R Nagar, Bangalore, Karnataka, INDIA - 560054. Karnataka India
(31) Priority Document No	:NA	(72)**Name of Inventor :**
(32) Priority Date	:NA	**1)Chiranjith Barui**
(33) Name of priority country	:NA	**2)Vidyanand Desai**
(86) International Application No	:NA	**3)Sanjay Subramanian**
Filing Date	:NA	
(87) International Publication No	: NA	
(61) Patent of Addition to Application Number	:NA	
Filing Date	:NA	
(62) Divisional to Application Number	:NA	
Filing Date	:NA	

(57) Abstract :
Title: AN ADAPTIVE SELF LACING FOOTWEAR ABSTRACT An adaptive self lacing footwear comprising: a footwear having a sole part and a upper part, wherein the sole part is made of a first material and the upper part comprises: a first set of flaps in that one end of each flap attached to the sole part; a canvas attached inside the flaps to cover the gaps between the flaps and also to provide smooth surface within, in that the canvas is made of a elastic material woven in the form of an origami folds; a anklet for inserting a foot inside the set of flaps and canvas forming the upper part; and an elastic thread which runs throughout the other end of each flap and canvas such that when pulled forms a self lacing mechanism that tightens the flaps and canvas forming a knot using elastic lock and bridges the footwear over the contours to form a locking mechanism thereby reducing the amount of work needed to lace and unlace the footwear with minimum human intervention.

No. of Pages : 14 No. of Claims : 4

(12) PATENT APPLICATION PUBLICATION
(21) Application No.201941054268 A
(19) INDIA
(22) Date of filing of Application :27/12/2019
(43) Publication Date : 02/07/2021

(54) Title of the invention : RETRACTOR PROVIDING ENHANCED PROTECTION TO THE SOFT TISSUE FOR ORAL SURGERY

(51) International classification	:A61B0017020000, A61C0005900000, A61K0031195000, A61C0001080000, A61K0009000000	(71)**Name of Applicant :** **1)M. S. Ramaiah University of Applied Sciences** Address of Applicant :University House, Gnanagangothri Campus, New BEL Road, M S R Nagar, Bangalore, Karnataka, INDIA - 560054. Karnataka India
(31) Priority Document No	:NA	(72)**Name of Inventor :**
(32) Priority Date	:NA	**1)Ranganath K**
(33) Name of priority country	:NA	
(86) International Application No	:NA	
Filing Date	:NA	
(87) International Publication No	: NA	
(61) Patent of Addition to Application Number	:NA	
Filing Date	:NA	
(62) Divisional to Application Number	:NA	
Filing Date	:NA	

(57) Abstract :
Retractor providing enhanced protection to the soft tissue for oral surgery ABSTRACT A retractor providing enhanced protection to the soft tissue for oral surgery comprising: a working arm configured to place intraoral inside patient™s mouth; a handle arm configured to hold the device firmly during oral surgery; and a slider of oval shape attached to the working arm which is capable of sliding over the working arm of the retractor, wherein the slider attached to the working arm of the retractor used to temporarily move the cheek away from the oral surgery site and act as a shield and is moved forward and backwards according to operator™s requirement to protect the soft tissues differentially. The retractor is a L - shaped right-angled surgical device with slider attached to the working arm of the retractor is about 3 cms 4cms in length.

No. of Pages : 11 No. of Claims : 3

(12) PATENT APPLICATION PUBLICATION
(21) Application No.201941054270 A
(19) INDIA
(22) Date of filing of Application :27/12/2019
(43) Publication Date : 02/07/2021

(54) Title of the invention : A NOVEL NUTRITIONAL COMPOSITION

(51) International classification	:G06Q0030020000, A23L0033000000, A23F0003160000, A61K0031522000, A23F0003360000
(31) Priority Document No	:NA
(32) Priority Date	:NA
(33) Name of priority country	:NA
(86) International Application No	:NA
Filing Date	:NA
(87) International Publication No	: NA
(61) Patent of Addition to Application Number	:NA
Filing Date	:NA
(62) Divisional to Application Number	:NA
Filing Date	:NA

(71)**Name of Applicant :**
1)M. S. Ramaiah University of Applied Sciences
Address of Applicant :University House, Gnanagangothri Campus, New BEL Road, M S R Nagar, Bangalore, Karnataka, INDIA - 560054. Karnataka India
(72)**Name of Inventor :**
1)Priya Arjun
2)Sreekanth N.
3)Kusuma K
4)Chandana M. N
5)Lokesh Sai. S.
6)Manaswi K.

(57) Abstract :
Title: A Novel Nutritional Composition ABSTRACT A method of preparation of a novel nutritional composition i.e., a pumpkin tea powder comprising: dehydrating a 200 gm of pumpkin and 20 pumpkin seeds and grinding them to obtain a dried pumpkin powder; grinding spices i.e., 15 cloves, 5 cinnamon, 5 green cardamom, 10 black pepper and 15 fennel seeds to obtain a spice powder; and mixing the dried pumpkin powder and the spice powder together to obtain a pumpkin tea powder, wherein the prepared novel nutritional composition i.e., a pumpkin tea powder has the required health benefits with nutritional values for daily consumption and beneficial to all age groups to pave way towards healthy living.

No. of Pages : 10 No. of Claims : 3

(12) PATENT APPLICATION PUBLICATION
(21) Application No.201941054319 A
(19) INDIA
(22) Date of filing of Application :28/12/2019
(43) Publication Date : 02/07/2021

(54) Title of the invention : SYSTEM AND METHOD OF MACHINE LEARNING BASED DEVIATIONPREDICTION AND INTERCONNECTED-METRICS DERIVATION FOR ACTION RECOMMENDATIONS

(51) International classification	:G06F0016953500, G08G0001000000, G06Q0050100000, G06Q0010060000, G06F0016951000	(71)**Name of Applicant :** **1)SAMYA.AI TECHNOLOGIES PRIVATE LIMITED** Address of Applicant :No 73, Adarsh Vista,, Basavanagar, BANGALORE, Bangalore, Karnataka, India, 560037. Karnataka India
(31) Priority Document No	:NA	(72)**Name of Inventor :**
(32) Priority Date	:NA	**1)Deepinder Dhingra**
(33) Name of priority country	:NA	
(86) International Application No	:NA	
Filing Date	:NA	
(87) International Publication No	: NA	
(61) Patent of Addition to Application Number	:NA	
Filing Date	:NA	
(62) Divisional to Application Number	:NA	
Filing Date	:NA	

(57) Abstract :
A system and method for automatically predicting deviation on a metric of a use-case and deriving interconnections between metrics for generating action recommendations is provided. The system includes a deviation management system 104 which captures data from a plurality of external sources and internal sources and comprises of a deviation management platform 106 and a deviation management environment 108. The system includes various computation modules which work the deviation management platform 106 to provide a deviation management service to a set of clients that are associated with that service. The service and its users are specific to use-case, wherein the use-case is specified by a client device 116 inside the system. The system comprises of external data which is horizontal across a plurality of deviation management services and internal data which is specific to every deviation management service.

No. of Pages : 34 No. of Claims : 10

(12) PATENT APPLICATION PUBLICATION
(21) Application No.201941054350 A
(19) INDIA
(22) Date of filing of Application :28/12/2019
(43) Publication Date : 02/07/2021

(54) Title of the invention : AN ARRANGEMENT FOR ARRESTING THE INWARD MOVEMENT OF A BRAKE PEDAL DURING A CRASH

(51) International classification	:A23K0020147000, C12P0019040000, B82Y0003000000, C22B0003000000, C08L0097020000
(31) Priority Document No	:NA
(32) Priority Date	:NA
(33) Name of priority country	:NA
(86) International Application No	:NA
Filing Date	:NA
(87) International Publication No	: NA
(61) Patent of Addition to Application Number	:NA
Filing Date	:NA
(62) Divisional to Application Number	:NA
Filing Date	:NA

(71)**Name of Applicant :**
1)Mahindra and Mahindra Limited
Address of Applicant :Mahindra & Mahindra Limited, Mahindra Research Valley, Mahindra World City, Plot No:41/1, Anjur P.O. , Chengalpattu, Kanchipuram-603004, Tamilnadu, India Tamil Nadu India
(72)**Name of Inventor :**
1)BANSODE, Praveen Jeevan
2)RANGEGOWDA, Punith
3)KUMAWAT, Pintu
4)JAT, Kailash

(57) Abstract :
ABSTRACT AN ARRANGEMENT FOR ARRESTING THE INWARD MOVEMENT OF A BRAKE PEDAL DURING A CRASH
The present invention relates to occupant safety in automobiles and envisages an arrangement (100) for arresting inward movement of a brake pedal during a crash. The arrangement (100) comprises an ingress arresting member (125). The ingress arresting member (125) is linked to the master cylinder (115) on one end, with the other end of the ingress arresting member (125) fixed to a member of the chassis (120) of the vehicle at a location on the chassis (120) which is selected to facilitate bringing the ingress arresting member (125) under tension due to rearward movement of the master cylinder (115) in the event of a frontal crash, thus arresting further rearward movement of the master cylinder (115) and thereby arresting inward movement of the brake pedal further into the passenger compartment towards the occupant. The ingress arresting member (125) improves occupant safety rating of the vehicle and is easy to install.

No. of Pages : 14 No. of Claims : 7

(12) PATENT APPLICATION PUBLICATION
(21) Application No.201941054360 A
(19) INDIA
(22) Date of filing of Application :29/12/2019
(43) Publication Date : 02/07/2021

(54) Title of the invention : BIODEGRADABLE BIOPLASTIC PREPARATION FROM INDUSTRIAL DIARY WASTE

(51) International classification	:B65D0065460000, C08J0005180000, B32B0007120000, C08L0099000000, A61L0015280000	(71)**Name of Applicant :** **1)Dr.Rasheeda Khanam** Address of Applicant :D.N0:38-31-148/3 Green Gardens, Marripalem, Visakhapatnam-530018 Andhra Pradesh, India Andhra Pradesh India
(31) Priority Document No	:NA	(72)**Name of Inventor :** **1)Dr.Rasheeda Khanam**
(32) Priority Date	:NA	
(33) Name of priority country	:NA	
(86) International Application No	:NA	
Filing Date	:NA	
(87) International Publication No	: NA	
(61) Patent of Addition to Application Number	:NA	
Filing Date	:NA	
(62) Divisional to Application Number	:NA	
Filing Date	:NA	

(57) Abstract :
ABSTRACT: Title: Biodegradable Bioplastic Preparation from Industrial Diary Waste The present disclosure discloses a biodegradable bioplastic prepared with low migration level from dairy industry waste that is used for dry food packaging. The eco-friendly biodegradable bioplastic from dairy industry waste aids to exhibit properties such as tensile strength, non-toxicity, and thereof. The biodegradable bioplastic is prepared by using easily biodegradable, non-toxic, non-tedious, and solid waste from dairy industries and agricultural waste banana peel. The prepared biodegradable bioplastics are strong, tough, cost-effective, light-weighted and simple. It can be dissolved in water or can be compostable thereby allowing rapid environment friendliness. Further, the bioplastics is degraded into biofertilizer for the usage of plant growth.

No. of Pages : 20 No. of Claims : 6

(12) PATENT APPLICATION PUBLICATION
(21) Application No.201941054374 A
(19) INDIA
(22) Date of filing of Application :30/12/2019
(43) Publication Date : 02/07/2021

(54) Title of the invention : METHOD AND SYSTEM FOR EARTHQUAKE RESISTANT OF STEEL STRUCTURES

(51) International classification	:E04H0009020000, E04B0001240000, E04C0005060000, E04C0003040000, E04B0005400000	(71)**Name of Applicant :** **1)A JAYARAMAN** Address of Applicant :SATHYAMANGALAM, ALATHUKKOMBAI POST, ERODE - 638401, TAMILNADU, INDIA Tamil Nadu India
(31) Priority Document No	:NA	(72)**Name of Inventor :**
(32) Priority Date	:NA	**1)A JAYARAMAN**
(33) Name of priority country	:NA	**2)DR.V. SENTHILKUMAR**
(86) International Application No	:NA	**3)N SATHUAKUMAR**
Filing Date	:NA	
(87) International Publication No	: NA	
(61) Patent of Addition to Application Number	:NA	
Filing Date	:NA	
(62) Divisional to Application Number	:NA	
Filing Date	:NA	

(57) Abstract :
Lot of techniques followed for the reduced the structure weight and structural cost but no one technique completely not success. Because they could not achieve load carrying capacity, deflection, shear and bending stress properly in the steel structures. If we want increasing the load carrying capacity of structures, the weight of structures also increased. When the structure weight increased, the cost of structures also increased and earthquake resisting capacity is minimized.The cost and weight oflight gauge cold formed steel structures has minimum compared with the rolledsteel structures. The rolled steel structures has been mainly failure will be occurring in connections due to dead weight of structures. There are different types of failure will be occur in the connections such as shear failure, bearing failure and tearing failure. Shear failures will typically occur in connections between members i.e. member to column connection, member to girder connection, etc..If the plate material is weaker than the bolt material, then failure will occur by bearing of the bolt on the plate and the hole will elongate. The moment resistance connection will be implemented in the steel connection easily reduce the failure andweight of structures. Particularly splice connection has load carrying capacity is high, weight, bending and deflection is minimum so base shear is minimum and safe for earthquake. The splice connection is acting hinged type of support at the joint so member is safe and failure will be minimum compare with other types rolled steel and moment resistant connections.

No. of Pages : 20 No. of Claims : 3

(12) PATENT APPLICATION PUBLICATION
(21) Application No.201941054396 A
(19) INDIA
(22) Date of filing of Application :30/12/2019
(43) Publication Date : 02/07/2021

(54) Title of the invention : OXIDATION OF AN ARYLALKYL OR ITS DERIVATIVE TO ITS CORRESPONDING CARBONYL OR CARBOXYLIC ACID

(51) International classification	:D21C0009100000, A61K0047260000, C07C0407000000, C07C0409040000, B01J0031180000	(71)**Name of Applicant :** **1)INDIAN INSTITUTE OF TECHNOLOGY MADRAS (IIT MADRAS)** Address of Applicant :The Dean, Industrial Consultancy & Sponsored Research (IC & SR), Indian Institute of Technology Madras, IIT Post -- Chennai Tamil Nadu India 600 036 Tamil Nadu India
(31) Priority Document No	:NA	
(32) Priority Date	:NA	
(33) Name of priority country	:NA	(72)**Name of Inventor :** **1)DILLIP KUMAR CHAND** **2)PRABAHARAN THIRUVENGETAM**
(86) International Application No	:NA	
Filing Date	:NA	
(87) International Publication No	: NA	
(61) Patent of Addition to Application Number	:NA	
Filing Date	:NA	
(62) Divisional to Application Number	:NA	
Filing Date	:NA	

(57) Abstract :
OXIDATION OF AN ARYLALKYL ORITS DERIVATIVE TO ITS CORRESPONDING CARBONYL OR CARBOXYLIC ACID
The present disclosure relates to a process for oxidation of an arylalkyl or its derivative to its corresponding carbonyl or carboxylic acid. The process comprises reacting the arylalkyl or its derivative, in water, with aqueous TBHP as an oxidant, in presence of a catalyst of formula (I): wherein, each of Ri, R2, and R3, independently, is alkyl, alkenyl, or alkynyl; and m is 0-20. The process is simple, cost effective, and environment friendly.

No. of Pages : 45 No. of Claims : 23

(12) PATENT APPLICATION PUBLICATION
(19) INDIA
(22) Date of filing of Application :30/12/2019

(21) Application No.201941054400 A
(43) Publication Date : 02/07/2021

(54) Title of the invention : BANANA LEAF PRESERVATION TECHNOLOGY

(51) International classification	:A61K0036880000, A01N0003000000, H01R0024280000, A01N0001020000, H01R0101000000	(71)**Name of Applicant :** **1)TENITH ADITHYAAM** Address of Applicant :20/25 B, NADAR STREET, WATRAP, TAMILNADU, INDIA-626132 Tamil Nadu India (72)**Name of Inventor :** **1)TENITH ADITHYAAM**
(31) Priority Document No	:NA	
(32) Priority Date	:NA	
(33) Name of priority country	:NA	
(86) International Application No	:NA	
Filing Date	:NA	
(87) International Publication No	: NA	
(61) Patent of Addition to Application Number	:NA	
Filing Date	:NA	
(62) Divisional to Application Number	:NA	
Filing Date	:NA	

(57) Abstract :
NOT SUBMITTED

No. of Pages : 8 No. of Claims : 0

(12) PATENT APPLICATION PUBLICATION
(19) INDIA
(22) Date of filing of Application :30/12/2019
(21) Application No.201941054406 A
(43) Publication Date : 02/07/2021

(54) Title of the invention : IMPROVISED POULTRY FEEDING PAN

(51) International classification	:A01K0039012000, A01K0005020000, A01K0039014000, A01K0001100000, A01K0039010000
(31) Priority Document No	:NA
(32) Priority Date	:NA
(33) Name of priority country	:NA
(86) International Application No	:NA
Filing Date	:NA
(87) International Publication No	: NA
(61) Patent of Addition to Application Number	:NA
Filing Date	:NA
(62) Divisional to Application Number	:NA
Filing Date	:NA

(71)**Name of Applicant :**
1)K.KANNAN
Address of Applicant :42, Madhusudhan Layout, Opp. KMCH, SITRA, Coimbatore Tamil Nadu India
2)M.NAVEEN KUMAR
(72)**Name of Inventor :**
1)K.KANNAN
2)M.NAVEEN KUMAR

(57) Abstract :
The present invention discloses an improvised poultry feeding pan used for dispensing feed to poultry by using an automatic feeder. The pan (2) comprises one or more ribs (2d). Each ribs (2d) having a vertical wall (2e) with a step portion (2l) of different heights from the bottom part (2a). A feed level adjuster (4) comprises of one or more radially extending slots (4d) for engagement with the vertical wall (2e) of the pan (2) to provide up and down movement to the feed level adjuster (4). The feed level adjuster (4) has an inclined rim portion provided with height controlling or adjusting means (4g). The feed level adjuster (4) has a step portion (4e) which sits on any one of the step portion (2l) of the pan to provide the required distance between the bottom portion (2a) of the pan and the feed level adjuster (4). FIGURE 3.

No. of Pages : 25 No. of Claims : 6

(12) PATENT APPLICATION PUBLICATION
(21) Application No.201941054407 A
(19) INDIA
(22) Date of filing of Application :30/12/2019
(43) Publication Date : 02/07/2021

(54) Title of the invention : METHOD AND SYSTEM FOR NAVIGATING AUTONOMOUS GROUND VEHICLE USING RADIO SIGNAL AND VISION SENSOR

(51) International classification	:G05D0001020000, G01S0005020000, G01S0017930000, G01S0005140000, G05D0001000000
(31) Priority Document No	:NA
(32) Priority Date	:NA
(33) Name of priority country	:NA
(86) International Application No	:NA
Filing Date	:NA
(87) International Publication No	: NA
(61) Patent of Addition to Application Number	:NA
Filing Date	:NA
(62) Divisional to Application Number	:NA
Filing Date	:NA

(71)**Name of Applicant :**
1)WIPRO LIMITED
Address of Applicant :Doddakannelli, Sarjapur Road, Bangalore-560035 Karnataka India
(72)**Name of Inventor :**
1)MANAS SARKAR
2)BALAJI SUNIL KUMAR

(57) Abstract :
METHOD AND SYSTEM FOR NAVIGATING AUTONOMOUS GROUND VEHICLE USING RADIO SIGNAL AND VISION SENSOR ABSTRACT The present invention discloses a method and a system for navigating an Autonomous Ground Vehicle (AGV) using radio signal and vision sensor. The method comprising generating a trajectory plan for a short distance from a path plan, wherein the path plan is determined using destination location and AVG location, identifying an approximate AGV location using a radio signal-based trilateration mechanism, estimating AGV location error with respect to a road lane centre by determining distance from the approximate AGV location to road boundary and road lane marking line and orientation difference between AGV orientation and road orientation, and correcting the trajectory plan by using the estimated AGV location error for navigating an AGV. Fig. 1

No. of Pages : 25 No. of Claims : 10

(12) PATENT APPLICATION PUBLICATION
(21) Application No.201941054420 A
(19) INDIA
(22) Date of filing of Application :30/12/2019
(43) Publication Date : 02/07/2021

(54) Title of the invention : METHOD AND SYSTEM FOR DETECTING AND NOTIFYING ACTIONABLE EVENTS DURING SURVEILLANCE

(51) International classification	:G08B0013196000, H04W0004400000, G06K0009000000, G08B0021020000, G08B0031000000	(71)**Name of Applicant :** **1)WIPRO LIMITED** Address of Applicant :Doddakannelli, Sarjapur Road, Bangalore 560035, Karnataka, India. Karnataka India (72)**Name of Inventor :** **1)SUBHAS CHANDRA MONDAL** **2)VISHAL KUMAR PANDEY**
(31) Priority Document No	:NA	
(32) Priority Date	:NA	
(33) Name of priority country	:NA	
(86) International Application No	:NA	
Filing Date	:NA	
(87) International Publication No	: NA	
(61) Patent of Addition to Application Number	:NA	
Filing Date	:NA	
(62) Divisional to Application Number	:NA	
Filing Date	:NA	

(57) Abstract :
METHOD AND SYSTEM FOR DETECTING AND NOTIFYING ACTIONABLE EVENTS DURING SURVEILLANCE
ABSTRACT The disclosure relates to method (500) and system (100) for detecting and notifying actionable events during surveillance. The method (500) may include receiving (502) initial multi-modal inputs from a geo-location during surveillance, determining (504) an incident of interest based on an analysis of the initial multi-modal inputs, and collecting (506) additional multi-modal inputs from at least one access device (110) corresponding to at least one person in the geo-location upon determination of the incident of interest. The method (500) may further include determining (508) the actionable event based on an analysis of the initial and the additional multi-modal inputs, and providing (510) a notification of the actionable event to one or more appropriate authorities (114). To be published with Figure 2.

No. of Pages : 48 No. of Claims : 13

(12) PATENT APPLICATION PUBLICATION
(21) Application No.201941054421 A
(19) INDIA
(22) Date of filing of Application :30/12/2019
(43) Publication Date : 02/07/2021

(54) Title of the invention : DOMAIN BASED TEXT EXTRACTION

(51) International classification	:G06F0016280000, G06F0017270000, G06F0016953500, G06F0016330000, G06F0017280000
(31) Priority Document No	:NA
(32) Priority Date	:NA
(33) Name of priority country	:NA
(86) International Application No	:NA
Filing Date	:NA
(87) International Publication No	: NA
(61) Patent of Addition to Application Number	:NA
Filing Date	:NA
(62) Divisional to Application Number	:NA
Filing Date	:NA

(71)**Name of Applicant :**
1)L&T TECHNOLOGY SERVICES LIMITED
Address of Applicant :DLF IT SEZ PARK, 2nd FLOOR - BLOCK 3, 1/124, MOUNT POONAMALLEE ROAD, RAMAPURAM, CHENNAI ,TAMILNADU, INDIA- 600 089. Tamil Nadu India
(72)**Name of Inventor :**
1)MADHUSUDAN SINGH
2)KAUSHIK HALDER
3)NIRMAL RAMESH RAYULU
4)ARITRA GHOSH DASTIDAR
5)AJAY SHA

(57) Abstract :
DOMAIN BASED TEXT EXTRACTION ABSTRACT This disclosure relates to a method and system for extracting information from contents of an input file. The method may include identifying text data from the input file, receiving a text input from a user for identifying relevant text entities from the plurality of text entities, and automatically generating a search pattern corresponding to the text input. The method may further include determining a pattern associated with each of the plurality of text entities, and mapping the search pattern corresponding to the text input with patterns associated with the plurality of text entities. The method may further include identifying one or more matching patterns from the patterns associated with the plurality of text entities based on the mapping, and extracting, from the plurality of text entities, relevant text entities corresponding to the one or more matching patterns.

No. of Pages : 33 No. of Claims : 10

(12) PATENT APPLICATION PUBLICATION
(19) INDIA
(22) Date of filing of Application :30/12/2019

(21) Application No.201941054424 A
(43) Publication Date : 02/07/2021

(54) Title of the invention : ROTATIONAL FUEL INJECTOR

(51) International classification	:F02M0059100000, A61M0005315000, F02M0057020000, H01F0007160000, F23R0003360000
(31) Priority Document No	:NA
(32) Priority Date	:NA
(33) Name of priority country	:NA
(86) International Application No	:NA
Filing Date	:NA
(87) International Publication No	: NA
(61) Patent of Addition to Application Number	:NA
Filing Date	:NA
(62) Divisional to Application Number	:NA
Filing Date	:NA

(71)**Name of Applicant :**
1)L&T TECHNOLOGY SERVICES LIMITED
Address of Applicant :DLF IT SEZ PARK, 2ND FLOOR - BLOCK 3, 1/124, MOUNT POONAMALLEE ROAD, RAMAPURAM, CHENNAI Tamil Nadu India
(72)**Name of Inventor :**
1)SHUBHAM SHRIVASTAVA

(57) Abstract :
This disclosure relates to a fuel injector (100) having a nozzle chamber (104) with one or more nozzle exits (108), and a plunger (102). The plunger (102) may be configured to move inside the nozzle chamber (104) to engage or disengage with the nozzle chamber (104) to block or allow, respectively, venting of combustible matter out of the nozzle chamber (104) via the one or more nozzle exits (108). A nozzle head (110) having one or more channels (112) may be fluidically coupled to the nozzle chamber (104) via the nozzle exits (108) and the channels (112). The nozzle head (110) may be mechanically coupled with the plunger (102). In response to the downward movement of the plunger (102), the nozzle head (110) may rotate about an axis (114) and simultaneously vent the combustible matter in a cylinder combustion chamber via the one or more channels (112).

No. of Pages : 28 No. of Claims : 10

(12) PATENT APPLICATION PUBLICATION
(21) Application No.201941054431 A
(19) INDIA
(22) Date of filing of Application :30/12/2019
(43) Publication Date : 02/07/2021

(54) Title of the invention : SMART INDOOR AIR HANDLER FOR MULTIZONE APPLICATION

(51) International classification	:H01M0010440000, G11B0017049000, G03G0015080000, A24D0003060000, B65D0006220000
(31) Priority Document No	:NA
(32) Priority Date	:NA
(33) Name of priority country	:NA
(86) International Application No	:NA
Filing Date	:NA
(87) International Publication No	: NA
(61) Patent of Addition to Application Number	:NA
Filing Date	:NA
(62) Divisional to Application Number	:NA
Filing Date	:NA

(71)**Name of Applicant :**
1)L&T TECHNOLOGY SERVICES LIMITED
Address of Applicant :DLF lT SEZ Park, 2nd Floor Block 3, 1/124, Mount Poonamallee Road, Ramapuram, Chennai, 600 089, Tamil Nadu, India Tamil Nadu India
(72)**Name of Inventor :**
1)MURALIDHARAN KARUNANIDHI
2)SURESH KODISANA
3)RAMMOHAN SETHURAJ
4)SOUGAT KUMAR MANDAL
5)BASKARAN KANDHAPPAN

(57) Abstract :
SMART INDOOR AIR HANDLER FOR MULTIZONE APPLICATION Temperature control system for Heating, Ventilation, and Air Conditioning (HVAC) systems and method thereof is disclosed. The temperature control system includes at least two inlet openings for receiving ambient air, wherein the received ambient air is fed in the HVAC system. The temperature control system further includes one or more inlet gates engaging with the at least two inlet openings for controlling an amount of ambient air being received from the at least two inlet openings and at least two outlet vents for releasing conditioned air generated by the HVAC system, wherein the conditioned air is generated using the received ambient air. The temperature control system includes a vane valve configured to move for adjusting an amount of conditioned air being released from each of the at least two outlet vents.

No. of Pages : 21 No. of Claims : 10

(12) PATENT APPLICATION PUBLICATION
(19) INDIA
(22) Date of filing of Application :30/12/2019
(21) Application No.201941054453 A
(43) Publication Date : 02/07/2021

(54) Title of the invention : ACCIDENT PREVENTION SYSTEM FOR HAIRPIN BEND ZONE

(51) International classification	:B62J0027000000, G08G0001096700, G08G0001160000, G08G0001000000, G08G0001015000
(31) Priority Document No	:NA
(32) Priority Date	:NA
(33) Name of priority country	:NA
(86) International Application No	:NA
Filing Date	:NA
(87) International Publication No	: NA
(61) Patent of Addition to Application Number	:NA
Filing Date	:NA
(62) Divisional to Application Number	:NA
Filing Date	:NA

(71)**Name of Applicant :**
1)Bannari Amman Institute of Technology
Address of Applicant :Department of Computer Science and Engineering, Bannari Amman Institute of Technology, Sathyamangalam, Erode(Dt), TamilNadu-638401. Tamil Nadu India
2)Mr P S Dinesh
3)Ms R S Soundariya
4)Mr R Rajesh
(72)**Name of Inventor :**
1)Dr. P Thangaraj
2)Dr. C Palanisamy
3)Dr. Rajasekar S S
4)Ramya R
5)Prabha Devi D

(57) Abstract :
Rapid evolutions in transportation and vehicle sector have resulted in increased number of accidents. The major reasons behind these accidents are carelessness, rash driving, and violation of traffic rules, driver drowsiness, poor road conditions and weather conditions especially on curved roads. According to a survey, collisions on curved roads account for 8-10% of total number of traffic crashes. Similarly, the number of deaths rated for 13-15%. Facing the hairpin bends is the major challenge encountered by drivers while driving. Also, the driver does not know the type of vehicle coming from the opposite side in curves and hairpin bends. To avoid these problems researchers had concentrated on proximity sensor, infrared sensor, piezoelectric sensor and ultrasonic sensor to provide the vehicle information through LED and buzzer system in hilly tracks. These systems are not sufficient because it is difficult to find the type of incoming and outgoing vehicles (two-wheeler, four-wheeler and heavy load trucks). To overcome these issues in the existing methods the system using ultrasonic sensor and ESP8266 microcontroller has been introduced on the hairpin bends. The proposed system is designed to identify the category of vehicles and that can be exposed to the drivers through LED lights.

No. of Pages : 8 No. of Claims : 5

(12) PATENT APPLICATION PUBLICATION
(21) Application No.201941054469 A
(19) INDIA
(22) Date of filing of Application :30/12/2019
(43) Publication Date : 02/07/2021

(54) Title of the invention : POLE-MOUNTED MOVEABLE SAW FOR CUTTING TREE BRANCHES

(51) International classification	:A01G0003080000, A01G0023095000, C09D0197020000, H03H0009100000, H03H0003080000	(71)**Name of Applicant :** **1)MARIA PAUL** Address of Applicant :3-63K, East Karankadu, Nagercoil, Tamilnadu, India-629809 Tamil Nadu India (72)**Name of Inventor :** **1)MARIA PAUL**
(31) Priority Document No	:NA	
(32) Priority Date	:NA	
(33) Name of priority country	:NA	
(86) International Application No	:NA	
Filing Date	:NA	
(87) International Publication No	: NA	
(61) Patent of Addition to Application Number	:NA	
Filing Date	:NA	
(62) Divisional to Application Number	:NA	
Filing Date	:NA	

(57) Abstract :
Abstract Pole-mounted moveable saw for cutting tree branches The pole-mounted moveable saw device is a simple mechanism and pruning tree branches is very easy. The claw

No. of Pages : 12 No. of Claims : 7

(12) PATENT APPLICATION PUBLICATION
(21) Application No.201941054474 A
(19) INDIA
(22) Date of filing of Application :30/12/2019
(43) Publication Date : 02/07/2021

(54) Title of the invention : PORTABLE DISPENSING DEVICE FOR DISPENSING AGRICULTURAL ITEMS SUCH AS FERTILIZER •

(51) International classification	:C05G0003000000, A01C0015120000, A01C0015020000, A01C0015140000, A01C0015060000	(71)**Name of Applicant :** **1)P. SIVA** Address of Applicant :1/19, NORTH STREET, THENKUMARAI (POST), ATTUR (TK), SALEM (DT), PIN CODE-636121 TAMIL NADU, INDIA Tamil Nadu India
(31) Priority Document No	:NA	(72)**Name of Inventor :** **1)P. SIVA**
(32) Priority Date	:NA	
(33) Name of priority country	:NA	
(86) International Application No	:NA	
Filing Date	:NA	
(87) International Publication No	: NA	
(61) Patent of Addition to Application Number	:NA	
Filing Date	:NA	
(62) Divisional to Application Number	:NA	
Filing Date	:NA	

(57) Abstract :
PORTABLE DISPENSING DEVICE FOR DISPENSING AGRICULTURAL ITEMS SUCH AS FERTILIZER • comprises a fertilizer processing unit with a rectangular plastic box (1), and a fertilizer dispensing unit. The box consists of a slanted plate (3), a slanted base (4), a rough surfaced dummy roller (5) and a rough surfaced rotatable steel roller (6) with a roller handle (7). The fertilizer dispensing unit has a flexible hose (9), a steel dispenser pipe (10), a steel square pipe (11) and a handle lever (14). The roller handle is rotated to break the lumps in the fertilizer while the fertilizer passes between the rollers. The handle lever is pulled to drop the fertilizer in the steel dispenser pipe onto the crops.

No. of Pages : 17 No. of Claims : 10

(12) PATENT APPLICATION PUBLICATION
(21) Application No.201941054495 A
(19) INDIA
(22) Date of filing of Application :30/12/2019
(43) Publication Date : 02/07/2021

(54) Title of the invention : PROCESS FOR THE PREPARATION OF N-(5-CHLOROPYRIDIN-2-YL)-2[4-(N,N-DIMETHYLCARBAMIMIDOYL)-BENZOYLAMINO]-5-METHOXYBENZAMIDE AND ITS PHARMACEUTICALLY ACCEPTABLE SALTS

(51) International classification	:C07D0213810000, A61K0031444000, A61K0047260000, C07D0213820000, A01N0043400000
(31) Priority Document No	:NA
(32) Priority Date	:NA
(33) Name of priority country	:NA
(86) International Application No	:NA
Filing Date	:NA
(87) International Publication No	: NA
(61) Patent of Addition to Application Number	:NA
Filing Date	:NA
(62) Divisional to Application Number	:NA
Filing Date	:NA

(71)**Name of Applicant :**
1)MSN Laboratories Private Limited, R&D Center
Address of Applicant :Plot No. 12, Phase-IV, Sy. No. 119 to 140, 258, 275 to 280, IDA, Pashamylaram (Vil), Patancheru (Mdl), Sangareddy (Dist), Telangana, India- 502 307. Telangana India
(72)**Name of Inventor :**
1)Singavarapu Adilakshmi
2)Sajja Eswaraiah
3)Srinivasan Thirumalai Rajan
4)Ghojala Venkat Reddy

(57) Abstract :
ABSTRACT Title of the invention: Process for the preparation of N-(5-chloropyridin-2-yl)-2[4-(N,N-dimethylcarbamimidoyl)-benzoylamino]-5-methoxybenzamide and its pharmaceutically acceptable salts The present invention provides a process for the preparation of N-(5-chloropyridin-2-yl)-2[4-(N,N-dimethylcarbamimidoyl)-benzoylamino]-5-methoxybenzamide represented by the following structural formula-1 and pharmaceutically acceptable salts thereof. Formula-1 The present invention also provides novel crystalline polymorph of N-(5-chloropyridin-2-yl)-2[4-(N,N-dimethylcarbamimidoyl)-benzoylamino]-5-methoxybenzamide succinate compound of formula-1b and process for its preparation.

No. of Pages : 26 No. of Claims : 10

(12) PATENT APPLICATION PUBLICATION
(19) INDIA
(22) Date of filing of Application :30/12/2019

(21) Application No.201941054539 A
(43) Publication Date : 02/07/2021

(54) Title of the invention : AN INTEGRATED SYSTEM FOR PROVIDING LEARNING AND JOB OPPORTUNITIES

(51) International classification	:G06Q0010100000, G09B0019000000, G06Q0030060000, G06Q0050200000, G06N0007000000	(71)**Name of Applicant :** **1)PlatiFi Solutions Pvt. Ltd.** Address of Applicant :No. 227, 4th Cross, Penfield Gardens, Telecom Layout, Yelahanka, Jakkur, Bangalore-560032, India Karnataka India
(31) Priority Document No	:NA	(72)**Name of Inventor :**
(32) Priority Date	:NA	**1)Trivikrama Rao Vepakomma**
(33) Name of priority country	:NA	**2)Neelesh Animireddy**
(86) International Application No	:NA	**3)Suman Banerjee**
Filing Date	:NA	
(87) International Publication No	: NA	
(61) Patent of Addition to Application Number	:NA	
Filing Date	:NA	
(62) Divisional to Application Number	:NA	
Filing Date	:NA	

(57) Abstract :
An integrated system for providing learning and job opportunities is disclosed. The system includes a user access subsystem to provide an access to at least one registered user designated with a predefined role; a data acquisition subsystem to acquire a plurality of datasets from a plurality of corresponding data storage repositories associated with one or more service providers; a service providing subsystem to analyse at least one requirement of the at least one registered user, wherein the at least one requirement includes an employment, a learning, an activity performance and a research requirement, to provide at least one service corresponding to the at least one requirement of the at least one registered user, wherein the at least one user service includes at least one of recommendation of one or more jobs, an experiential learning service, an assignment of one or more activities, and a discussion forum for the research requirement. FIG. 1

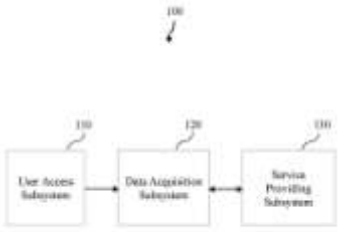

FIG. 1

No. of Pages : 29 No. of Claims : 10

(12) PATENT APPLICATION PUBLICATION
(21) Application No.201941054540 A
(19) INDIA
(22) Date of filing of Application :30/12/2019
(43) Publication Date : 02/07/2021

(54) Title of the invention : SYSTEM AND METHOD TO PROMOTE CUSTOMISED LEARNING USING AN INTERACTIVE MENTORING AND TEACHING ASSISTANT

(51) International classification	:G09B0007000000, G09B0007040000, G09B0019060000, G06N0020000000, G09B0019180000	(71)**Name of Applicant :** **1)PlatiFi Solutions Pvt. Ltd.** Address of Applicant :No. 227, 4th Cross, Penfield Gardens, Telecom Layout, Yelahanka, Jakkur, Bangalore-560032 Karnataka India
(31) Priority Document No	:NA	(72)**Name of Inventor :**
(32) Priority Date	:NA	**1)Trivikrama Rao Vepakomma**
(33) Name of priority country	:NA	**2)Neelesh Animireddy**
(86) International Application No	:NA	**3)Suman Banerjee**
Filing Date	:NA	
(87) International Publication No	: NA	
(61) Patent of Addition to Application Number	:NA	
Filing Date	:NA	
(62) Divisional to Application Number	:NA	
Filing Date	:NA	

(57) Abstract :
SYSTEM AND METHOD TO PROMOTE CUSTOMISED LEARNING USING AN INTERACTIVE MENTORING AND TEACHING ASSISTANT ABSTRACT A system to promote customised learning using an interactive mentoring and teaching assistant is disclosed. The system includes an interactive teaching assistant to receive an input query associated with an experiential learning process from a learner; a rule engine to access a student centric database and a skill-centric database, to fetch information associated with the learner to update the student centric database and the skill centric database; a session delivery subsystem to fetch required instructional content corresponding to the experiential learning process from a concept information database, to enable the interactive teaching assistant to deliver fetched instructional content corresponding to the experiential learning process associated with the learner; a learner assessment subsystem to generate a performance report for promoting the customised learning based on evaluation of performance of the learner. FIG. 1

No. of Pages : 28 No. of Claims : 10

(12) PATENT APPLICATION PUBLICATION
(21) Application No.201941054546 A
(19) INDIA
(22) Date of filing of Application :30/12/2019
(43) Publication Date : 02/07/2021

(54) Title of the invention : A METHOD FOR FACILE, RAPID AND INDUSTRIALLY SCALABLE PREPARATION OF METAL HYDROXIDE COMPOSITION

(51) International classification	:B82Y0030000000, H01M0004900000, B22F0009240000, C03C0001000000, B22F0001000000
(31) Priority Document No	:NA
(32) Priority Date	:NA
(33) Name of priority country	:NA
(86) International Application No	:NA
Filing Date	:NA
(87) International Publication No	: NA
(61) Patent of Addition to Application Number	:NA
Filing Date	:NA
(62) Divisional to Application Number	:NA
Filing Date	:NA

(71)**Name of Applicant :**
1)Hydromaterials Private Limited
Address of Applicant :42-44, 2nd Floor, Nutech Plaza, NSK Salai Arcot Road, Kodambakkam, Chennai Tamil Nadu India
2)INDIAN INSTITUTE OF TECHNOLOGY MADRAS (IIT Madras)
(72)**Name of Inventor :**
1)M. Udhaya Sankar
2)Thalappil Pradeep

(57) Abstract :
ABSTRACT The present invention relates to a facile, rapid and scalable method for the preparation of the metal hydroxide composition within 3 hours. The said method involves hydrolyzing the metal ion below 40oC in the presence of dispersant followed by addition of settling agent under vigorous stirring. The reaction is stopped within few minutes of addition of settling agent and the resultant solution is filtered immediately. The combined use of dispersant and capping agent offers mono dispersed, nanometer size, poorly crystalline yet easily filterable non-gelled hydrous metal hydroxide below pH 7. The resultant precipitate is dried between 50 to 60oC to avoid any phase transformation.

No. of Pages : 23 No. of Claims : 7

(12) PATENT APPLICATION PUBLICATION
(21) Application No.201941054560 A
(19) INDIA
(22) Date of filing of Application :30/12/2019
(43) Publication Date : 02/07/2021

(54) Title of the invention : DESIGN OF LCLC RESONANT CONVERTER FOR HIGH POWER APPLICATIONS

(51) International classification	:H02M0003335000, H02M0001000000, H02M0003337000, G06F0017500000, C21C0005460000	(71)**Name of Applicant :** **1)BHARATH INSTITUTE OF HIGHER EDUCATION AND RESEARCH** Address of Applicant :173, Agharam Road, Selaiyur, Chennai 600 073 Tamil Nadu India
(31) Priority Document No	:NA	(72)**Name of Inventor :**
(32) Priority Date	:NA	**1)R.GEETHA**
(33) Name of priority country	:NA	**2)Dr.T.S.SIVAKUMARAN**
(86) International Application No	:NA	
Filing Date	:NA	
(87) International Publication No	: NA	
(61) Patent of Addition to Application Number	:NA	
Filing Date	:NA	
(62) Divisional to Application Number	:NA	
Filing Date	:NA	

(57) Abstract :
ABSTRACT DESIGN OF LCLC RESONANT CONVERTER FOR HIGH POWER APPLICATIONS In recent years the design and development of various DC-DC Resonant Converters (RC) have been focused for telecommunication and aerospace applications. It is because these converters exhibits high switching losses, reduced reliability, electromagnetic interference (EMI) and acoustic noise at high frequencies. Hence, this invention is, an approach based on four element topology of resonant converter. This approach is very effective in high power applications. The mathematical model of LCLC resonant converter has been developed. A PI and Fuzzy Gain Scheduled PI controller was utilized for improving the dynamic responses of the proposed converter. The control system operation was simulated using the MATLAB/Simulink power system toolbox and experimental results are furnished to verify the efficiency of this method. The results obtained indicate that the proposed approach is an effective approach in regulating the output voltage and boosting the efficiency of LCLC resonant converter.

No. of Pages : 29 No. of Claims : 4

(12) PATENT APPLICATION PUBLICATION
(19) INDIA
(22) Date of filing of Application :30/12/2019
(21) Application No.201941054566 A
(43) Publication Date : 02/07/2021

(54) Title of the invention : SULPHIDE BASED SOLID ELECTROLYTE AND PREPARATION THEREOF

(51) International classification	:H01M0010056200, C01G0023000000, H01G0009150000, G02F0001152300, H01L0045000000
(31) Priority Document No	:NA
(32) Priority Date	:NA
(33) Name of priority country	:NA
(86) International Application No	:NA
Filing Date	:NA
(87) International Publication No	: NA
(61) Patent of Addition to Application Number	:NA
Filing Date	:NA
(62) Divisional to Application Number	:NA
Filing Date	:NA

(71)**Name of Applicant :**
1)NISSAN MOTOR CO., LTD.
Address of Applicant :2, TAKARA-CHO, KANAGAWA-KU, YOKOHAMA-SHI, KANAGAWA, 2210023, JAPAN Japan
2)RENAULT S.A.S.
(72)**Name of Inventor :**
1)ABDUL MUTHALIBU, Mohammed Nazar
2)KRISHNAN, Vijay Ganesh
3)SRINIVASAN, Bharani
4)KALYANARANGAN, Balaji

(57) Abstract :
SULPHIDE BASED SOLID ELECTROLYTE AND PREPARATION THEREOF The instant disclosure provides a sulphide based solid electrolyte having a Formula I LiaM1bM2cSdXe wherein M1 is a tetravalent element having ionic radius in the range of 0.5 Å to 0.8 Å, M2 is a pentavalent element having ionic radius in the range of 0.5 Å to 0.8 Å and X is a halogen, wherein a, b, c, d, and e ranges from $0.05<a\leq4$, $0.05\leq b\leq1$, $0.1\leq c\leq0.3$, $3.5<d\leq4$ and $0.05<e\leq0.5$. A method for conveniently obtaining the electrolyte is provided herein.

No. of Pages : 33 No. of Claims : 12

(12) PATENT APPLICATION PUBLICATION
(21) Application No.201941054585 A
(19) INDIA
(22) Date of filing of Application :31/12/2019
(43) Publication Date : 02/07/2021

(54) Title of the invention : SYSTEM AND METHOD FOR PREDICTING DISCOUNT-DEMAND ELASTICITY

(51) International classification	:G06N0020000000, G06Q0010000000, G06F0008200000, G01M0013000000, G06Q0010060000
(31) Priority Document No	:NA
(32) Priority Date	:NA
(33) Name of priority country	:NA
(86) International Application No	:NA
Filing Date	:NA
(87) International Publication No	: NA
(61) Patent of Addition to Application Number	:NA
Filing Date	:NA
(62) Divisional to Application Number	:NA
Filing Date	:NA

(71)**Name of Applicant :**
1)Myntra Designs Private Limited
Address of Applicant :3rd floor, AKR TECH Park, Krishna Reddy Industrial Area, Muneshwara Nagar, Bangalore 560068 INDIA Karnataka India
(72)**Name of Inventor :**
1)Sumit Borar
2)Manchit Madan

(57) Abstract :
System and method for predicting discount-demand elasticity of one or more retail items in a portfolio are presented. The system includes a feature engineering module configured to generate a plurality of features based on historical data of a plurality of retail items in the portfolio. The system further includes an elasticity estimator configured to estimate discount-demand elasticity values for the plurality of retail items in the portfolio; and an elasticity-band generator configured to generate a set of elasticity bands for the plurality of retail items based on the estimated discount-demand elasticity values. The system furthermore includes a training module configured to train a classification model based on the generated plurality of features and the generated set of elasticity bands. The system moreover includes an elasticity prediction module configured to generate discount-demand elasticity of the one or more retail item in the portfolio from the trained classification model.

No. of Pages : 23 No. of Claims : 18

(12) PATENT APPLICATION PUBLICATION
(21) Application No.201941054591 A
(19) INDIA
(22) Date of filing of Application :31/12/2019
(43) Publication Date : 02/07/2021

(54) Title of the invention : A SYSTEM AND METHOD FOR STATION LESS ELECTRIC CHARGING POINT OR ELECTRICAL TWO WHEELERS

(51) International classification	:G07F0015000000, G06Q0030020000, H02G0001020000, G06Q0050300000, G07F0017000000	(71)**Name of Applicant :** **1)Mr. SHYAMSHARATH** Address of Applicant :1-130, EDENJA HOUSE, AITHUR VILLAGE, P.O, SUNKADAKATTE, PUTTUR TALUK, DAKSHINA KANNADA, KARNATAKA, INDIA-574230 Karnataka India
(31) Priority Document No	:NA	
(32) Priority Date	:NA	(72)**Name of Inventor :**
(33) Name of priority country	:NA	**1)Mr. SHYAMSHARATH**
(86) International Application No	:NA	
Filing Date	:NA	
(87) International Publication No	: NA	
(61) Patent of Addition to Application Number	:NA	
Filing Date	:NA	
(62) Divisional to Application Number	:NA	
Filing Date	:NA	

(57) Abstract :
A system and method for station less electric charging point for electrical two wheelers is illustrated. The system includes a charging point installed by a service provider to provide electrical recharging services to a user. The charging point is installed in an electric pole and consists essentially of a box operably coupled to au electrical transmission line passing through the electric pole via a pair of electrical connectors. There is provided a main controller adapted to control the functioning of a plurality of functional elements associated with the charging point including the box, charging socket, flaps, timer and display unit. The system utilizes global navigation satellite system (GNSS) including GPS for locating the nearest electric pole with the charging point. The user pays for the actual d¼ration of charging his/her electrical two wheeler via the digital payment mode by scanning a quick response (QR) code.

No. of Pages : 27 No. of Claims : 4

(12) PATENT APPLICATION PUBLICATION
(19) INDIA
(22) Date of filing of Application :31/12/2019

(21) Application No.201941054592 A
(43) Publication Date : 02/07/2021

(54) Title of the invention : CYCLONE SAND FILTER

(51) International classification	:B01D0021260000, B01D0021000000, B01D0050000000, F04D0007040000, B04C0003000000	(71)**Name of Applicant :** **1)RAVANDS CONTROLS INCORPORATION** Address of Applicant :Survey No. 403/1A2, Vajjireddy Palli, Puthalapattu, Chittoor Dt., Andhra Pradesh, India Andhra Pradesh India
(31) Priority Document No	:NA	(72)**Name of Inventor :**
(32) Priority Date	:NA	**1)NAIDU, D. Damodara**
(33) Name of priority country	:NA	
(86) International Application No	:NA	
Filing Date	:NA	
(87) International Publication No	: NA	
(61) Patent of Addition to Application Number	:NA	
Filing Date	:NA	
(62) Divisional to Application Number	:NA	
Filing Date	:NA	

(57) Abstract :
Disclosed herein a Cyclone Filter for separating heavy particles from water or any other liquid. The filter comprises a Head (1) to introduce the liquid into the Filter, causing the liquid to swirl enhanced by internal shape of head (1) and flow of liquid takes turn around vertex pipe (3), said liquid containing solid foreign matter; a vertical Vertex pipe (3) to lead clean water out of the filter; a Vane (2) to separate Head from separation chamber; a Hollow Cylindrical separation chamber (4) where particles of more mass will be pushed away from the central axis and towards the wall due to increased flowrate and swirling action; a collection tank (6) to collect the dropped particles; characterized in that the vane (2) comprises curved surfaces with substantially elliptical pathways (2A) perpendicular the Vertex pipe (3) that enhances the velocity of flow and its swirling action. FIG. 7

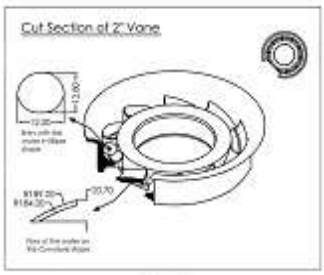

FIGURE 7

No. of Pages : 22 No. of Claims : 10

(12) PATENT APPLICATION PUBLICATION
(19) INDIA
(22) Date of filing of Application :31/12/2019
(21) Application No.201941054620 A
(43) Publication Date : 02/07/2021

(54) Title of the invention : PILLOW

(51) International classification	:H04N0019109000, G02B0013220000, H04N0005782000, G11B0007006000, G11B0007131000
(31) Priority Document No	:NA
(32) Priority Date	:NA
(33) Name of priority country	:NA
(86) International Application No	:NA
Filing Date	:NA
(87) International Publication No	: NA
(61) Patent of Addition to Application Number	:NA
Filing Date	:NA
(62) Divisional to Application Number	:NA
Filing Date	:NA

(71)**Name of Applicant :**
1)ROBOTEX
Address of Applicant :4/28 A, Rajalakshmi Nagar, Lakshmipuram, Peeelamedu, Coimbatore Tamil Nadu India
(72)**Name of Inventor :**
1)Amirthalingam Jothimurugan

(57) Abstract :
ABSTRACT PILLOW The present invention discloses a pillow configured to support the neck and knee muscles of the human body. Said pillow (1) comprises at least five portions such as a head foam (11) with support plate (21), at least a lower couch (31), an upper couch (41) and a flat couch (14). FIG - 2

No. of Pages : 18 No. of Claims : 7

(12) PATENT APPLICATION PUBLICATION
(19) INDIA
(22) Date of filing of Application :31/12/2019
(21) Application No.201941054621 A
(43) Publication Date : 02/07/2021

(54) Title of the invention : AN ELECTROMAGNETIC FLOWMETER •

(51) International classification	:G01F0001580000, G01F0001600000, A61N0001372000, G01F0001000000, H02J0050600000	(71)**Name of Applicant :** **1)ABB SCHWEIZ AG** Address of Applicant :Brown Boveri Strasse 6, CH-5400 Baden, Switzerland Switzerland (72)**Name of Inventor :** **1)Subhashish Dasgupta**
(31) Priority Document No	:NA	
(32) Priority Date	:NA	
(33) Name of priority country	:NA	
(86) International Application No	:NA	
Filing Date	:NA	
(87) International Publication No	: NA	
(61) Patent of Addition to Application Number	:NA	
Filing Date	:NA	
(62) Divisional to Application Number	:NA	
Filing Date	:NA	

(57) Abstract :
The present invention discloses an electromagnetic flowmeter (300) and a method thereof for measuring a flow of a fluid (204) through a conduit (201), comprising: at least two coils (202a, 202b), at least two electrodes (203a, 203b) and a control circuitry (307). The at least two coils (202a, 202b) are electrically excited to generate a magnetic field within a flowmeter fluid space. A first (202a) and a second coil (202b) of the at least two coils (202a, 202b) are placed around a first and second central axis (202c, 202d) of the conduit (201) respectively. The at least two electrodes (203a, 203b) arranged diametrically opposite to each other to detect an induced voltage in the flowmeter fluid space in response to the generated magnetic field. The control circuitry (307) for measuring the induced voltage on each of the at least two electrodes (203a, 203b) to provide a measure of flow of the fluid (204). FIG.3

No. of Pages : 26 No. of Claims : 16

(12) PATENT APPLICATION PUBLICATION
(19) INDIA
(22) Date of filing of Application :31/12/2019
(21) Application No.201941054629 A
(43) Publication Date : 02/07/2021

(54) Title of the invention : MULTIMEDIA CONTENT SUMMARIZATION METHOD AND SYSTEM THEREOF

(51) International classification	:G06F0016780000, H04N0021234000, G06F0016783000, G06F0016710000, H04N0021435000	(71)**Name of Applicant :** **1)WIPRO LIMITED** Address of Applicant :Doddakannelli, Sarjapur Road, Bangalore 560035, Karnataka India (72)**Name of Inventor :** **1)MANJUNATH RAMACHANDRA IYER**
(31) Priority Document No	:NA	
(32) Priority Date	:NA	
(33) Name of priority country	:NA	
(86) International Application No	:NA	
Filing Date	:NA	
(87) International Publication No	: NA	
(61) Patent of Addition to Application Number	:NA	
Filing Date	:NA	
(62) Divisional to Application Number	:NA	
Filing Date	:NA	

(57) Abstract :
ABSTRACT A method and system for summarizing multimedia content is disclosed. The method includes the steps of extracting (306) a set of video files from a multimedia content such that each of the set of video files comprises a plurality of frames, and summarizing (308) each of the set of video files to generate a set of summarized video files. Summarizing (308) includes modifying a number of frames in each of the set of video files while retaining a caption generated for each of the set of video files. The method further includes generating (310) sets of bridge frames for the set of summarized video files, based on a deep learning model. A set of bridge frames from the sets of bridge frames maintains continuity between corresponding adjacent summarized video files. The method includes generating (312) a summarized multimedia content based on the set of summarized video files and the sets of bridge frames.

No. of Pages : 40 No. of Claims : 10

(12) PATENT APPLICATION PUBLICATION
(21) Application No.201941054636 A
(19) INDIA
(22) Date of filing of Application :31/12/2019
(43) Publication Date : 02/07/2021

(54) Title of the invention : WINDMILL OPERATED SOLAR DESALINATION PLANT WITH A SPECIAL PISTON VALVE

(51) International classification	:C02F0001440000, C02F0001040000, C02F0001140000, F28D0020000000, C02F0001160000
(31) Priority Document No	:NA
(32) Priority Date	:NA
(33) Name of priority country	:NA
(86) International Application No	:NA
Filing Date	:NA
(87) International Publication No	: NA
(61) Patent of Addition to Application Number	:NA
Filing Date	:NA
(62) Divisional to Application Number	:NA
Filing Date	:NA

(71)**Name of Applicant :**
1)K N BALAN
Address of Applicant :PLOT NO. 20, FIRST STREET, MCN NAGAR, THORAIPAKKAM, CHENNAI ,TAMIL NADU,INDIA-600097. Tamil Nadu India
2)NANA B YUGGDHA
3)SARA K MUGDHA
(72)**Name of Inventor :**
1)K N BALAN
2)NANA B YUGGDHA
3)SARA K MUGDHA
4)N PRAKASH
5)HEMANTH PRASANNA R

(57) Abstract :
A desalination plant operated by a renewable energy source such as windmill (104) and solar energy desalinates the saline water and stores in a water drum [106] for domestic purposes. The renewable source of energy is used since it has zero carbon emission. The piston valve [105] present in the desalination plant is used to avoid accidents caused due to excess low pressure inside the evaporating chamber [103]. (Fig.1)

No. of Pages : 11 No. of Claims : 8

(12) PATENT APPLICATION PUBLICATION
(19) INDIA
(22) Date of filing of Application :31/12/2019
(21) Application No.201941054639 A
(43) Publication Date : 02/07/2021

(54) Title of the invention : ZERO CARBON WATER PUMP

(51) International classification :F03B0017000000, E21F0016000000, F02B0075220000, B08B0015000000, A47L0015420000
(31) Priority Document No :NA
(32) Priority Date :NA
(33) Name of priority country :NA
(86) International Application No :NA
Filing Date :NA
(87) International Publication No : NA
(61) Patent of Addition to Application Number :NA
Filing Date :NA
(62) Divisional to Application Number :NA
Filing Date :NA

(71)**Name of Applicant :**
1)K N BALAN
Address of Applicant :PLOT NO.20, FIRST STREET,MCN NAGAR, THORAIPAKKAM CHENNAI TAMIL NADU INDIA-600097 Tamil Nadu India
2)NANA B YUGGDHA
3)SARA K MUGDHA
(72)**Name of Inventor :**
1)K N BALAN
2)NANA B YUGGDHA
3)SARA K MUGDHA
4)N PRAKASH
5)HEMANTH PRASANNA R
6)J ARUN
7)U YASHWANTH
8)R CHRISTU PAUL

(57) Abstract :
A zero-carbon water pump is designed in such a way that it is powered by humans for pumping water from water sump or well to an overhead tank in order to stop the production of greenhouse gases in the environment. Based on the pedalling movement done by the user, the free wheel (103) transmits the rotary motion to fly wheel (104) for multiplying the motion and then it is transmitted to the clutch plate (107) for obtaining the required rpm. Once the required rpm is achieved the reciprocating water pump (108) pumps the water from water sump/well to overhead tank with the human assistance. (Fig.1)

No. of Pages : 14 No. of Claims : 10

(12) PATENT APPLICATION PUBLICATION
(19) INDIA
(22) Date of filing of Application :31/12/2019
(21) Application No.201941054661 A
(43) Publication Date : 02/07/2021

(54) Title of the invention : A HERBAL COMPOSITION FOR THERAPEUTIC MANAGEMENT OF TUBERCULOSIS AND A PROCESS OF PREPARATION THEREOF

(51) International classification	:A23K0020147000, C12P0019040000, B82Y0030000000, C22B0003000000, C08L0097020000	(71)**Name of Applicant :** **1)Ramakrishnan, K K** Address of Applicant :Kavalmaravil, Vellakayam, Mullaringadu, Vannapuram, Dist: Idukki, Kerala-685582, India. Kerala India
(31) Priority Document No	:NA	(72)**Name of Inventor :**
(32) Priority Date	:NA	**1)Ramakrishnan, K K**
(33) Name of priority country	:NA	
(86) International Application No	:NA	
Filing Date	:NA	
(87) International Publication No	: NA	
(61) Patent of Addition to Application Number	:NA	
Filing Date	:NA	
(62) Divisional to Application Number	:NA	
Filing Date	:NA	

(57) Abstract :
Embodiments of the present disclosure provide a herbal composition including refined extracts of Thespesia populnea and Piper longum along with pharmaceutically acceptable excipients and additives. The developed formulations exhibit superior activity in treating tuberculosis and other complications caused by the tuberculosis. In another aspect, present invention further discloses process of preparing such herbal composition for treatment and management of tuberculosis without any side effects.

No. of Pages : 14 No. of Claims : 8

(12) PATENT APPLICATION PUBLICATION
(19) INDIA
(22) Date of filing of Application :31/12/2019
(21) Application No.201941054666 A
(43) Publication Date : 02/07/2021

(54) Title of the invention : AN APPARATUS FOR MONITORING THE VIEWERS AND A METHOD TO CONTROL THE TELEVISION

(51) International classification	:H04N0019109000, G02B0013220000, H04N0005782000, G11B0007006000, G11B0007131000	(71)**Name of Applicant :** **1)ROBOTEX** Address of Applicant :4/28 A, Rajalakshmi Nagar, Lakshmipuram, Peeelamedu, Coimbatore, Tamil Nadu Tamil Nadu India
(31) Priority Document No	:NA	(72)**Name of Inventor :**
(32) Priority Date	:NA	**1)Amirthalingam Jothimurugan**
(33) Name of priority country	:NA	
(86) International Application No	:NA	
Filing Date	:NA	
(87) International Publication No	: NA	
(61) Patent of Addition to Application Number	:NA	
Filing Date	:NA	
(62) Divisional to Application Number	:NA	
Filing Date	:NA	

(57) Abstract :
ABSTRACT AN APPARATUS FOR MONITORING THE VIEWERS AND A METHOD TO CONTROL THE TELEVISION The present invention discloses an apparatus to monitor the distance between the television and viewers and also to monitor the screen time. The present invention consists a distance monitoring apparatus and an application programme for user interface devices to control the television remotely. The apparatus (11) comprises of a main case (12), fixing support (13), switch (14), primary button (15), secondary button (16), distance regulating means (17), light indication means (18), IR sensor (19), object sensing means (20), buzzer (21), IR transmitter (22), power supply port (23), transceiver (24) and control unit (25) wherein said monitoring apparatus (11) is wirelessly connected to user interface device (41). FIG 2 (For publication)

No. of Pages : 26 No. of Claims : 8

(12) PATENT APPLICATION PUBLICATION
(19) INDIA
(22) Date of filing of Application :31/12/2019

(21) Application No.201941054671 A
(43) Publication Date : 02/07/2021

(54) Title of the invention : COMPOSITE FOR CATHODE IN SOLID STATE BATTERY AND IMPLEMENTATIONS THEREOF

(51) International classification	:H01M0004360000, H01M0004131000, H01M0010054000, H01M0010052000, H01M0004020000
(31) Priority Document No	:NA
(32) Priority Date	:NA
(33) Name of priority country	:NA
(86) International Application No	:NA
Filing Date	:NA
(87) International Publication No	: NA
(61) Patent of Addition to Application Number	:NA
Filing Date	:NA
(62) Divisional to Application Number	:NA
Filing Date	:NA

(71)**Name of Applicant :**
1)NISSAN MOTOR CO., LTD.
Address of Applicant :2, Takara-cho, Kanagawa-ku, Yokohama-shi, Kanagawa 2210023, Japan Japan
2)RENAULT S.A.S.
(72)**Name of Inventor :**
1)KRISHNAN, Vijay Ganesh
2)CHEIYEDATHU, Akhil Dileep
3)SRINIVASAN, Bharani
4)ABDUL MUTHALIBU, Mohammed Nazar

(57) Abstract :
The present disclosure provides a cathode for solid state battery comprising a composite of formula MxSy.YzM™pSq, wherein M and M™ are independently selected from titanium, vanadium, nickel, iron, copper, zirconium, tungsten, molybdenum, niobium, or cobalt; Y is selected from lithium, sodium, or potassium; x and p are integers and independently selected from 1 4; and y, z and q are integers and independently selected from 1 5. A process for conveniently obtaining the composite for cathode is provided herein.

No. of Pages : 33 No. of Claims : 16

(12) PATENT APPLICATION PUBLICATION
(19) INDIA
(22) Date of filing of Application :31/12/2019

(21) Application No.201941054672 A
(43) Publication Date : 02/07/2021

(54) Title of the invention : REVENUE CYCLE INVENTORY MANAGEMENT

(51) International classification	:G06Q0010060000, G16H0010600000, G06T0007110000, G06F0011070000, G06F0016245700
(31) Priority Document No	:NA
(32) Priority Date	:NA
(33) Name of priority country	:NA
(86) International Application No	:NA
Filing Date	:NA
(87) International Publication No	: NA
(61) Patent of Addition to Application Number	:NA
Filing Date	:NA
(62) Divisional to Application Number	:NA
Filing Date	:NA

(71)**Name of Applicant :**
1)CERNER INNOVATION, INC.
Address of Applicant :10200 Abilities Way, Kansas City, Kansas 66111, United States of America U.S.A.
(72)**Name of Inventor :**
1)STREICH, Brian
2)SORENSEN, Nathan Richard
3)BARADWAJ, Anand
4)FRITTS, George Bennett

(57) Abstract :
Methods, computer systems, and computer storage media are provided for utilizing system diagnostics focused in areas of disruption to improve inventory and workforce management in a revenue cycle management system. Diagnostic data is utilized to automatically identify disruptions in the revenue cycle management system across a plurality of clients. The disruptions are automatically ranked based on an impact to the revenue cycle management system and a time required to execute a correction for each disruption. A recommendation is provided for the client to execute the correction for each disruption.

No. of Pages : 49 No. of Claims : 20

(12) PATENT APPLICATION PUBLICATION
(19) INDIA
(22) Date of filing of Application :31/12/2019

(21) Application No.201941054673 A
(43) Publication Date : 02/07/2021

(54) Title of the invention : SYSTEMS AND METHODS FOR MANAGING FUTURE RADIOLOGY ORDERS

(51) International classification	:G06Q0050220000, G06Q0010080000, G16H0040200000, G06Q0010100000, G06F0012080200
(31) Priority Document No	:NA
(32) Priority Date	:NA
(33) Name of priority country	:NA
(86) International Application No	:NA
Filing Date	:NA
(87) International Publication No	: NA
(61) Patent of Addition to Application Number	:NA
Filing Date	:NA
(62) Divisional to Application Number	:NA
Filing Date	:NA

(71)**Name of Applicant :**
1)CERNER INNOVATION, INC.
Address of Applicant :10200 Abilities Way, Kansas City, Kansas 66111, United States of America U.S.A.
(72)**Name of Inventor :**
1)BHOJARAJA, Kiran
2)NANDWANI, Vikram
3)RAGHAVIAH, Hemalatha
4)GUPTA, Deepak
5)MILNE, Bobbie
6)BHARRACHARYYA, Tania
7)ADHIKARY, Premjit
8)KRISHNAPPA, Roopa
9)C G, Bhuvaneshwari

(57) Abstract :
Computerized systems and methods are provided for managing future radiology orders for multiple facilities. The systems and methods can include detecting a location identifier for each future radiology order, and in response to detecting the location identifier, determining a specific radiology facility for that location identifier. The respective future radiology orders can then be provided to the intended radiology facility.

No. of Pages : 41 No. of Claims : 20

(12) PATENT APPLICATION PUBLICATION
(21) Application No.201941054680 A
(19) INDIA
(22) Date of filing of Application :31/12/2019
(43) Publication Date : 02/07/2021

(54) Title of the invention : A SYSTEM FOR IOT ENABLED PRECISION AGRICULTURE AND MICROCLIMATE SENSING IN DROUGHT AFFECTED AREA

(51) International classification	:A61G0007057000, A01G0025160000, G06Q0010060000, A01B0079000000, G05D0001020000
(31) Priority Document No	:NA
(32) Priority Date	:NA
(33) Name of priority country	:NA
(86) International Application No	:NA
Filing Date	:NA
(87) International Publication No	: NA
(61) Patent of Addition to Application Number	:NA
Filing Date	:NA
(62) Divisional to Application Number	:NA
Filing Date	:NA

(71)**Name of Applicant :**
1)S. ELANGO
Address of Applicant :DEPARTMENT OF ELECTRONICS AND COMMUNICATION ENGINEERING, BANNARI AMMAN INSTITUTE OF TECHNOLOGY, SATHYAMANGALAM, ERODE(Dt), TAMIL NADU - 638401. Tamil Nadu India
2)SAJAN P. PHILIP
3)A. DANIEL RAJ
4)S. RAJA SEKAR
(72)**Name of Inventor :**
1)S. ELANGO
2)SAJAN P. PHILIP
3)A. DANIEL RAJ
4)S. RAJA SEKAR

(57) Abstract :
Precision agriculture is collecting local environmental data about an agricultural land and use the information to take intelligent decision to optimize the resource utilization. This is very important in increasing the yietd and reducing the cost of farming. The invention disclosed here addresses this problem through loT enabled microclimate sensing module. The agricultural land under consideration is divided into different sectors and each sector is f¯tted with a microclimate sensing module. The microclimate sensing module collects environmental data from each sector and sends it to the central module. Effici«nt low power strategy is implemented in the invention through periodic collection of data. A dedicated RF channel is used to send the data to the central module. The central module periodically sends the data to a central intelligent controller vvhich is the heart of the invention. The central intelligent module is a mechanism which takes decisions based on the environmental data, user inputs and learning from the previous decision. The central intelligent module also sends the information about the data and decision to the user terminal which can be a mobile application or a dedicated handheld device. Based on the automated decision, the central intelligent module then activates the actuators and. the effect of present decision is stored for future calculations.

No. of Pages : 11 No. of Claims : 9

(12) PATENT APPLICATION PUBLICATION
(21) Application No.201941054681 A
(19) INDIA
(22) Date of filing of Application :31/12/2019
(43) Publication Date : 02/07/2021

(54) Title of the invention : FARM MANAGEMENT SYSTEM AND METHOD

(51) International classification	:G06Q0010060000, G06Q0030020000, H04N0021240000, F17D0005000000, G06F0003048400	(71)**Name of Applicant :** **1)KIRAN KUMAR R** Address of Applicant :#25A, 2nd Cross, Mahadeshwara Nilaya, T.Dasarahalli , Bangalore - 560057 Karnataka India (72)**Name of Inventor :** **1)KIRAN KUMAR R**
(31) Priority Document No	:NA	
(32) Priority Date	:NA	
(33) Name of priority country	:NA	
(86) International Application No	:NA	
Filing Date	:NA	
(87) International Publication No	: NA	
(61) Patent of Addition to Application Number	:NA	
Filing Date	:NA	
(62) Divisional to Application Number	:NA	
Filing Date	:NA	

(57) Abstract :
A farm management system and a method are disclosed. The system also includes a farmland allocation subsystem configured to allocate a certain area of farmland to one or more users based on the requirement of the one or more users upon registration of the one or more users on a platform, a monitoring subsystem configured to monitor one or more parameters associated with maintenance of the farmland upon capturing one or more images by one or more entities; obtain data associated with the one or more parameters based on a monitored result, an analysing subsystem configured to analyse the data associated with the one or more parameters; receive one or more opinions from one or more experts in real time upon analysing the data for managing the farmland. FIG. 1

No. of Pages : 25 No. of Claims : 10

(12) PATENT APPLICATION PUBLICATION
(21) Application No.201941054682 A
(19) INDIA
(22) Date of filing of Application :31/12/2019
(43) Publication Date : 02/07/2021

(54) Title of the invention : DEVELOPMENT OF EXTRUDED PRODUCTS INCORPORATING CARROT AND TOMATO POMACE

(51) International classification	:A23P0030200000, A23P0030340000, A23L0019000000, A23J0003180000, A23L0007100000
(31) Priority Document No	:NA
(32) Priority Date	:NA
(33) Name of priority country	:NA
(86) International Application No	:NA
Filing Date	:NA
(87) International Publication No	: NA
(61) Patent of Addition to Application Number	:NA
Filing Date	:NA
(62) Divisional to Application Number	:NA
Filing Date	:NA

(71)**Name of Applicant :**
1)GAUDTHAM R.S
Address of Applicant :DEPT OF FOOD TECHNOLOGY, SRI SHAKTHI INSTITUTE OF ENGINEERING AND TECHNOLOGY, L&T BYPASS ROAD, COIMBATORE - 641 062, TAMIL NADU, INDIA. Tamil Nadu India
(72)**Name of Inventor :**
1)GAUDTHAM R.S

(57) Abstract :
Extrusion is a thermo-mechanical process where the food material is subjected to high temperatures while also creating a high shear and high-pressure environment using rotating screws.Cereal grains are generally used as a major raw material for development of extruded snacks due their high composition of staren which develops good expansion characteristics. Extruded RTE snacks are planned to be prepared from base flour blend of rice and corn in equa! proportion fortified with pomace of carrot in proprtion of 5%, 10% and 15% and pomace of tomato in proportion of 10%, 15% and 20%. This work targets utilization of the industrial byproducts which are equipped with nutritional benefits. Fruit and vegetable byproducts/waste are inexpensive, and are available in' large quantities. Pomace, which is one such byproduct can be used as a food ingredi«nt because of its beneficial composition. Properties which are to be studied for the developed product are physico-chemical properties such as colour, acidity, fat, proteins and ash. In addition, extrudate and functional properties such as specific mechanical energy, expansion ratio, bulk density, water absorption, moisture and texture. The product to be developed is expected to have good nutritional retention, storage stability and sensory acceptability. Over the days it's been observed that, extruded products possess promising sensory characteristics which attracts wide range of audience. Hence by adopting this methodology various unvalued byproducts can be effectively utilized.

No. of Pages : 4 No. of Claims : 4

(12) PATENT APPLICATION PUBLICATION
(21) Application No.201941054683 A
(19) INDIA
(22) Date of filing of Application :31/12/2019
(43) Publication Date : 02/07/2021

(54) Title of the invention : SYSTEM FOR CLEANING A WATER TANK

(51) International classification	:E04H0004160000, B08B0009093000, B05B0001180000, C22B0009187000, C02F0001000000	(71)**Name of Applicant :** **1)Ganeshprasad S K** Address of Applicant :Basaveshwara Nilaya, Kurubageri Koppad Street, Ranebennue 581115, Karnataka, India Karnataka India
(31) Priority Document No	:NA	(72)**Name of Inventor :** **1)Ganeshprasad S K**
(32) Priority Date	:NA	
(33) Name of priority country	:NA	
(86) International Application No	:NA	
Filing Date	:NA	
(87) International Publication No	: NA	
(61) Patent of Addition to Application Number	:NA	
Filing Date	:NA	
(62) Divisional to Application Number	:NA	
Filing Date	:NA	

(57) Abstract :
A system for cleaning a water tank is disclosed. The system includes a manual water sprinkling unit mechanically fitted on top of the water tank. The manual water sprinkling unit is configured to release a jet of water to clean debris accumulated over inner walls and bottom of the water tank. The system includes an interior base slope configured at the bottom of the water tank. The interior base slope is configured to guide outflow of water in a predefined direction via a first opening for removal of accumulated debris along with sprinkled water. The disclosed system provides easy mechanism to clean the water tank. FIG. 1

No. of Pages : 11 No. of Claims : 3

(12) PATENT APPLICATION PUBLICATION
(19) INDIA
(22) Date of filing of Application :31/12/2019
(21) Application No.201941054684 A
(43) Publication Date : 02/07/2021

(54) Title of the invention : OSMOTICALLY DEHYDRATED COCONUT FLAKES

(51) International classification	:A23N0005030000, A23L0019000000, A23L0002520000, A61L0031100000, A23C0011040000
(31) Priority Document No	:NA
(32) Priority Date	:NA
(33) Name of priority country	:NA
(86) International Application No	:NA
Filing Date	:NA
(87) International Publication No	: NA
(61) Patent of Addition to Application Number	:NA
Filing Date	:NA
(62) Divisional to Application Number	:NA
Filing Date	:NA

(71)**Name of Applicant :**
1)DURGADEVI S
Address of Applicant :DEPARTMENT OF FOOD TECHNOLOGY, SRI SHAKTHI INSTITUTE OF ENGINEERING AND TECHNOLOGY, L&T BYPASS ROAD, COIMBATORE-641 062, TAMILNADU, INDIA. Tamil Nadu India
2)NITHYA BALA SUNDARI S.
(72)**Name of Inventor :**
1)DURGADEVI S
2)NITHYA BALA SUNDARI S.

(57) Abstract :
In recent years, delicious snacks have been produced from coconut. Basically, this snack food contains dry coconut which is produced by the removal of water from the slices of mature or semi-mature coconut. A pre-treatment is accomplished before conventional drying. An example of inexpensive pre-treatment is the osmotic dehydration. Patent aims at procedures' to prepare osmoatially dehydrated coconut flakes and incorporate it in various bakery foods.

No. of Pages : 4 No. of Claims : 2

(12) PATENT APPLICATION PUBLICATION
(21) Application No.201941054686 A
(19) INDIA
(22) Date of filing of Application :31/12/2019
(43) Publication Date : 02/07/2021

(54) Title of the invention : METHOD AND SYSTEM FOR ALLEVIATING AUTHENTICITY OF SENSORS IN BIOMETRIC AUTHENTICATION

(51) International classification	:G06K0009000000, G06F0021320000, H04L0009320000, H04W0012060000, G07C0009000000	(71)**Name of Applicant :** **1)WIPRO LIMITED** Address of Applicant :Doddakannelli, Sarjapur Road, Bangalore 560035, Karnataka, India. Karnataka India (72)**Name of Inventor :** **1)RISHAV DAS**
(31) Priority Document No	:NA	
(32) Priority Date	:NA	
(33) Name of priority country	:NA	
(86) International Application No	:NA	
Filing Date	:NA	
(87) International Publication No	: NA	
(61) Patent of Addition to Application Number	:NA	
Filing Date	:NA	
(62) Divisional to Application Number	:NA	
Filing Date	:NA	

(57) Abstract :
A method and authentication system (101) for alleviating authenticity of sensors in biometric authentication is disclosed. The authentication system (101) receives fingerprint data from a plurality of sensing devices configured in the authentication system and extract one or more attributes associated with the fingerprint data. An expanded value for each of the one or more attributes is determined based on one or more predefined techniques. The authentication system (101) trains a model associated with authentication of fingerprints using the one or more attributes and corresponding expanded value. Further, one or more errors associated with the fingerprint data are predicted based on fingerprint data received over a period of time in real-time and the model is retrained based on the predicted one or more errors to alleviate authenticity of sensors in biometric authentication. Fig.1

No. of Pages : 32 No. of Claims : 12

(12) PATENT APPLICATION PUBLICATION
(21) Application No.201941054690 A
(19) INDIA
(22) Date of filing of Application :31/12/2019
(43) Publication Date : 02/07/2021

(54) Title of the invention : A METHOD AND SYSTEM FOR REDUCING ROAD CONGESTION

(51) International classification	:G08G0001010000, G08G0001096700, G08G0001052000, G08G0001070000, G08G0001081000	(71)**Name of Applicant :** **1)WIPRO LIMITED** Address of Applicant :Doddakannelli, Sarjapur Road, Bangalore 560035, Karnataka India
(31) Priority Document No	:NA	(72)**Name of Inventor :** **1)SUMIT SHOVON MITRA** **2)DEBASISH CHANDA**
(32) Priority Date	:NA	
(33) Name of priority country	:NA	
(86) International Application No	:NA	
Filing Date	:NA	
(87) International Publication No	: NA	
(61) Patent of Addition to Application Number	:NA	
Filing Date	:NA	
(62) Divisional to Application Number	:NA	
Filing Date	:NA	

(57) Abstract :
A METHOD AND SYSTEM FOR REDUCING ROAD CONGESTION ABSTRACT Disclosed herein is method and congestion management system for reducing road congestion. Traffic data related to plurality of vehicles is analyzed by a trained traffic model for predicting speed of each vehicle and signal time associated with intersection points. Thereafter, optimal speed for each vehicle and an optimal signal time for each of the intersection points is determined based on analysis of the previous values and historic traffic data. Finally, the determined optimal speed and the optimal signal time are respectively provided to a vehicle control system associated with each vehicle and a traffic controller associated with each intersection point. In an embodiment, the method of present disclosure reduces traffic congestion on any selected portion of road. Further, the method of present disclosure eliminates and/or minimizes number of instances that a vehicle has to stop/start at the traffic signals, thereby enhancing fuel economy and reducing waiting time for the vehicles. FIG. 1

No. of Pages : 33 No. of Claims : 10

(12) PATENT APPLICATION PUBLICATION
(21) Application No.201941054697 A
(19) INDIA
(22) Date of filing of Application :31/12/2019
(43) Publication Date : 02/07/2021

(54) Title of the invention : FLAVOURED RING TRAVELLER AND A PROCESS TO OBTAIN THE SAME

(51) International classification	:H04N0019109000, G02B0013220000, H04N0005782000, G11B0007006000, G11B0007131000	(71)**Name of Applicant :** **1)ROBOTEX** Address of Applicant :4/28 A, Rajalakshmi Nagar, Lakshmipuram, Peeelamedu, Coimbatore, Tamil Nadu Tamil Nadu India
(31) Priority Document No	:NA	(72)**Name of Inventor :**
(32) Priority Date	:NA	**1)Amirthalingam Jothimurugan**
(33) Name of priority country	:NA	
(86) International Application No	:NA	
Filing Date	:NA	
(87) International Publication No	: NA	
(61) Patent of Addition to Application Number	:NA	
Filing Date	:NA	
(62) Divisional to Application Number	:NA	
Filing Date	:NA	

(57) Abstract :
ABSTRACT FLAVOURED RING TRAVELLER AND A PROCESS TO OBTAIN THE SAME The present invention relates to a flavoured Ring Traveller and a process to obtain desired flavour on the ring travellers. The process for introducing such flavour on steel or metallic components is preferably an oil quenching process. said traveller (1) consists a ball bearing steel body (2) covered by a metal plating (3), said Ring traveller is coated with a flavouring agent. Said flavouring agent is in the form of oil or powder and said flavourant is bitter in taste.

No. of Pages : 12 No. of Claims : 6

(12) PATENT APPLICATION PUBLICATION
(21) Application No.201941054739 A
(19) INDIA
(22) Date of filing of Application :31/12/2019
(43) Publication Date : 02/07/2021

(54) Title of the invention : METHOD FOR INTEGRATING APPLICATIONS WITH INFOTAINMENT SYSTEM OF VEHICLE, AND SYSTEM THEREOF

(51) International classification	:G06F0008600000, G06F0009540000, G06F0008380000, G06F0009440000, G06F0008200000
(31) Priority Document No	:NA
(32) Priority Date	:NA
(33) Name of priority country	:NA
(86) International Application No	:NA
Filing Date	:NA
(87) International Publication No	: NA
(61) Patent of Addition to Application Number	:NA
Filing Date	:NA
(62) Divisional to Application Number	:NA
Filing Date	:NA

(71)**Name of Applicant :**
1)WIPRO LIMITED
Address of Applicant :Doddakannelli, Sarjapur Road, Bangalore 560035, India Karnataka India
(72)**Name of Inventor :**
1)DEBASISH CHANDA
2)BENOY SAHA
3)ANIKET KARMAKAR
4)VIJAYENDRA MOHAN AGARWAL

(57) Abstract :
METHOD FOR INTEGRATING APPLICATIONS WITH INFOTAINMENT SYSTEM OF VEHICLE, AND SYSTEM THEREOF
ABSTRACT The present disclosure relates to integrating a plurality of applications with an infotainment system of a vehicle (101). A plurality of integration properties (206) is received from a plurality of applications. Each of the plurality of applications is associated with a projection technology and each of the plurality of application is developed in a respective development language and respective development platform. A plurality of generic behaviour of the plurality of integration properties (206) of the plurality of applications is identified. A projection model is created based on the plurality of generic behaviour of the plurality of integration properties (206) of the plurality of applications. A unified projection application is generated based on the projection model, to integrate the plurality of applications developed using respective development language and development platform with the infotainment system of the vehicle (101). Figure 3

No. of Pages : 35 No. of Claims : 10

(12) PATENT APPLICATION PUBLICATION
(19) INDIA
(22) Date of filing of Application :31/12/2019

(21) Application No.201941054744 A
(43) Publication Date : 02/07/2021

(54) Title of the invention : METHOD AND SYSTEM FOR DETECTING ACTION ITEMS FROM A CONVERSATION

(51) International classification	:G06Q0010100000, G10L0015260000, G06N0020000000, G10L0017000000, H04M0003560000
(31) Priority Document No	:NA
(32) Priority Date	:NA
(33) Name of priority country	:NA
(86) International Application No	:NA
Filing Date	:NA
(87) International Publication No	: NA
(61) Patent of Addition to Application Number	:NA
Filing Date	:NA
(62) Divisional to Application Number	:NA
Filing Date	:NA

(71)**Name of Applicant :**
1)VIRTUSA CORPORATION
Address of Applicant :132 TURNPIKE ROAD, SUITE 300, SOUTHBOROUGH, MA 01772, USA U.S.A.
(72)**Name of Inventor :**
1)RAVI CHANDU UMMADISETTI
2)BALAJI SRINIVASAN

(57) Abstract :
METHOD AND SYSTEM FOR DETECTING ACTION ITEMS FROM A CONVERSATION ABSTRACT Embodiments of the present disclosure provide for computer implemented method and system for detecting action items from a conversation. An input in the form of audio files capturing a conversation is analysed to predict the productivity of a meeting and extract action items along with many other machine learning insights like speaker positivity comparison, speaker confidence comparison, speaker talk time comparison, speaker diarization of the conversation, topics that were not discussed in the conversation. The method also auto generates email delivering what it as learnt from insights generated to everybody in the meeting, allocates the extracted action items to designated assignee, and shares a feedback regarding the conversation, thereby enabling an organisation achieve better results, efficient utilisation of time, maintaining a targeted approach in terms of important topics for the organisation. The present invention streamlines the workflow and removes latency in allocation of work. FIG. 1

No. of Pages : 45 No. of Claims : 14

(12) PATENT APPLICATION PUBLICATION
(19) INDIA
(22) Date of filing of Application :31/12/2019

(21) Application No.201941054745 A
(43) Publication Date : 02/07/2021

(54) Title of the invention : IMPROVED PROCESS FOR THE PREPARATION OF 3,4-DIAMINOPYRIDINE PHOSPHATE

(51) International classification	:C07C0235640000, C07D0403040000, C08G0063200000, C07F0009090000, C07D0403100000
(31) Priority Document No	:NA
(32) Priority Date	:NA
(33) Name of priority country	:NA
(86) International Application No	:NA
Filing Date	:NA
(87) International Publication No	: NA
(61) Patent of Addition to Application Number	:NA
Filing Date	:NA
(62) Divisional to Application Number	:NA
Filing Date	:NA

(71)**Name of Applicant :**
1)MSN Laboratories Private Limited, R&D Center
Address of Applicant :MSN Laboratories Private Limited, R&D Center Plot No. 12, Phase-IV, Sy No. 119 to 140, 258, 275 to 280, IDA, Pashamylaram (Vill), Patancheru (Mdl), Sangareddy (Dist), Telangana. India -502 307 Telangana India
(72)**Name of Inventor :**
1)Srinivasan Thirumalai Rajan
2)Sajja Eswaraiah
3)Vijayavitthal T. Mathad
4)Gade Srinivas Reddy
5)Thippireddy Purna Chandrasekhar Reddy
6)Rachala Sridhar Goud

(57) Abstract :
Abstract Title of the Invention: Improved process for the preparation of 3,4-diaminopyridine phosphate. 5 The present invention provides a process for the preparation of Amifampridine phosphate represented by the following structural formula. Formula-1a

No. of Pages : 16 No. of Claims : 10

(12) PATENT APPLICATION PUBLICATION
(21) Application No.201941054761 A
(19) INDIA
(22) Date of filing of Application :31/12/2019
(43) Publication Date : 02/07/2021

(54) Title of the invention : SYSTEM AND METHOD TO EXTRACT SOFTWARE DEVELOPMENT REQUIREMENTS FROM NATURAL LANGUAGE

(51) International classification	:G06F0017270000, G06F0008100000, G06F0016350000, G06F0008200000, G06F0011360000	(71)**Name of Applicant :** **1)WIPRO LIMITED** Address of Applicant :Doddakannelli, Sarjapur Road, Bangalore 560035 . Karnataka India
(31) Priority Document No	:NA	(72)**Name of Inventor :** **1)ROHIT KRISHNA RAYAPATI** **2)AMAN CHANDRA**
(32) Priority Date	:NA	
(33) Name of priority country	:NA	
(86) International Application No	:NA	
Filing Date	:NA	
(87) International Publication No	: NA	
(61) Patent of Addition to Application Number	:NA	
Filing Date	:NA	
(62) Divisional to Application Number	:NA	
Filing Date	:NA	

(57) Abstract :
ABSTRACT The disclosure relates to system (100) and method (300) for extracting software development requirements from natural language information. In one example, the method (300) may include receiving (304) structured text data related to a software development and derived from natural language information, extracting (305) a plurality of features for each sentence in the structured text data, and determining (309) a set of requirement classes and a set of confidence scores for the each sentence, based on the plurality of features, using a set of classification models. The method (300) may further include deriving (313) a final requirement class and a final confidence score for the each sentence based on the set of requirement classes and the set of confidence scores for the each sentence corresponding to the set of classification models, and (314) providing the software development requirements based on the final requirement class and the final confidence score for the each sentence. [To be published with Figure 2]

No. of Pages : 57 No. of Claims : 10

(12) PATENT APPLICATION PUBLICATION
(19) INDIA
(22) Date of filing of Application :31/12/2019
(21) Application No.201941054776 A
(43) Publication Date : 02/07/2021

(54) Title of the invention : ELECTRIC VEHICLE POWERTRAIN THERMAL MANAGEMENT SYSTEM

(51) International classification	:B60H0001000000, H01M0010480000, B60L0001020000, H01M0010613000, H01M0010635000	(71)**Name of Applicant :** **1)Emflux Motors Pvt. Ltd** Address of Applicant :No. 16, Bhuvanappa Layout, Tavarekere Main Road, Kaveri Layout, Suddagunte Palya, Bengaluru, Karnataka 560029 Karnataka India
(31) Priority Document No	:NA	(72)**Name of Inventor :**
(32) Priority Date	:NA	**1)Vaibhav Bhagat**
(33) Name of priority country	:NA	
(86) International Application No	:NA	
Filing Date	:NA	
(87) International Publication No	: NA	
(61) Patent of Addition to Application Number	:NA	
Filing Date	:NA	
(62) Divisional to Application Number	:NA	
Filing Date	:NA	

(57) Abstract :
A thermal management system for an electric vehicle powertrain is provided. The invention is directed at system and methods for maintaining optimal temperature of the battery, motor, control unit and onboard charging unit in an electric vehicle while the battery is being charged and discharged. A coolant is circulated through the battery, motor, control unit and onboard charging unit. The optimal temperature of the battery, motor, control unit and onboard charging unit is maintained by the control unit which operates one or more coolant loops and at least one refrigerant loop in accordance with the factors including but not limited to the heat rejection rate from the heat producing units, temperature of those units and ambient temperature

No. of Pages : 23 No. of Claims : 14

(12) PATENT APPLICATION PUBLICATION
(21) Application No.201941054782 A
(19) INDIA
(22) Date of filing of Application :31/12/2019
(43) Publication Date : 02/07/2021

(54) Title of the invention : METHOD AND SYSTEM FOR TRAINING ARTIFICIAL NEURAL NETWORK BASED IMAGE CLASSIFIER USING CLASS-SPECIFIC RELEVANT FEATURES

(51) International classification	:G06K0009620000, G06N0003080000, A61B0005000000, G06K0009660000, G06K0009000000
(31) Priority Document No	:NA
(32) Priority Date	:NA
(33) Name of priority country	:NA
(86) International Application No	:NA
Filing Date	:NA
(87) International Publication No	: NA
(61) Patent of Addition to Application Number	:NA
Filing Date	:NA
(62) Divisional to Application Number	:NA
Filing Date	:NA

(71)**Name of Applicant :**
1)WIPRO LIMITED
Address of Applicant :Doddakannelli, Sarjapur Road, Bangalore 560035, Karnataka, India Karnataka India
(72)**Name of Inventor :**
1)VINUTHA BANGALORE NARAYANA MURTHY
2)CHANDRASHEKAR BANGALORE NAGARAJ
3)MANJUNATH RAMACHANDRA IYER

(57) Abstract :
METHOD AND SYSTEM FOR TRAINING ARTIFICIAL NEURAL NETWORK BASED IMAGE CLASSIFIER USING CLASS-SPECIFIC RELEVANT FEATURES ABSTRACT The disclosure relates to method (200) and system (100) for training an artificial neural network (ANN) based image classifier using class-specific relevant features. The method (200) includes receiving (201) the ANN based image classifier, training image dataset, and various features of the training image dataset. The method (200) further includes determining (202) a relative relevance value of each of the features corresponding to each of the classes based on the ANN based image classifier, segregating (203) co-occurring features from the features for each of the classes based on the training image dataset and the ANN based image classifier, identifying (204) an imbalance in the class-specific relevant features for each of the classes based on the relative relevance value of each of the features corresponding to each of the classes, and updating (205) the ANN based image classifier based on the imbalance in the class-specific relevant features and the co-occurring features for each of the classes. FIG. 2

No. of Pages : 35 No. of Claims : 10

(12) PATENT APPLICATION PUBLICATION
(21) Application No.201941054786 A
(19) INDIA
(22) Date of filing of Application :31/12/2019
(43) Publication Date : 02/07/2021

(54) Title of the invention : A METHOD AND SYSTEM FOR PROVIDING AUGMENTED REALITY INFORMATION FOR AN OBJECT

(51) International classification	:G06T0019000000, G06K0009000000, G06K0009320000, G06F0003010000, B60Q0001140000	(71)**Name of Applicant :** **1)WIPRO LIMITED** Address of Applicant :Doddakannelli, Sarjapur Road, Bangalore 560035, Karnataka, India. Karnataka India (72)**Name of Inventor :** **1)ASHOK CHANDRAN** **2)KAILAS VALIYAVEETIL**
(31) Priority Document No	:NA	
(32) Priority Date	:NA	
(33) Name of priority country	:NA	
(86) International Application No	:NA	
Filing Date	:NA	
(87) International Publication No	: NA	
(61) Patent of Addition to Application Number	:NA	
Filing Date	:NA	
(62) Divisional to Application Number	:NA	
Filing Date	:NA	

(57) Abstract :
Disclosed herein is a method and augmented reality system for providing augmented reality information for an object. The system receives an image from an image capturing device and identifies one or more objects of interest. Thereafter, system identifies location of each object of interest in the image. The system retrieves a virtual marker for each object of interest from a virtual marker repository. The system places virtual marker at the identified location corresponding to each object of interest. The image along with marker is provided to a client device. At the client device, the marker is identified in the image. For each identified marker, the system retrieves augmented reality information from augmented data repository. The augmented reality information is displayed for each object of interest in the image. The present disclosure automatically places virtual marker and provides augmented information associated with object by identifying object of interest in the image. FIG. 1

No. of Pages : 27 No. of Claims : 10

(12) PATENT APPLICATION PUBLICATION
(19) INDIA
(22) Date of filing of Application :31/12/2019

(21) Application No.201941054796 A
(43) Publication Date : 02/07/2021

(54) Title of the invention : METHOD AND SYSTEM FOR MULTIMODAL ANALYSIS BASED EMOTION RECOGNITION

(51) International classification	:G06K0009000000, G06K0009620000, G10L0017260000, G06K0009520000, G06K0009460000
(31) Priority Document No	:NA
(32) Priority Date	:NA
(33) Name of priority country	:NA
(86) International Application No	:NA
Filing Date	:NA
(87) International Publication No	: NA
(61) Patent of Addition to Application Number	:NA
Filing Date	:NA
(62) Divisional to Application Number	:NA
Filing Date	:NA

(71)**Name of Applicant :**
1)WIPRO LIMITED
Address of Applicant :Doddakannelli, Sarjapur Road, Bangalore 560035, Karnataka, India. Karnataka India
(72)**Name of Inventor :**
1)RAHUL YADAV
2)GOPICHAND AGNIHOTRAM

(57) Abstract :
The present invention discloses method and system for multimodal analysis based emotion recognition. The method comprising segmenting video data of a user into a plurality of video segments. A plurality of visual features, voice features and text features from the plurality of video segments is extracted. Autocorrelation values among each of the plurality of visual features, the voice features, and the text features is determined. Each of the plurality of visual features, the voice features and the text features is aligned based on video segment identifier and the autocorrelation values to obtain a plurality of aligned multimodal features. One of two classes of emotions is determined for each of the plurality of aligned multimodal features. The determined emotion for each of the plurality of aligned multimodal features is compared with historic multimodal features from a database, and emotion of the user is determined at real time based on comparison. Fig. 1

No. of Pages : 33 No. of Claims : 14

(12) PATENT APPLICATION PUBLICATION
(21) Application No.201941054826 A
(19) INDIA
(22) Date of filing of Application :31/12/2019
(43) Publication Date : 02/07/2021

(54) Title of the invention : LARGE SCALE MANUFACTURING OF GRAPHENE POLYHEDRAL STRUCTURES BY CVD METHOD [CHEMICAL VAPOR DEPOSITION] LEADING CONVERSION OF CARBONACEOUS GAS INTO GRAPHENE IN PRESENCE OF SPECIFIC METALLIC CATALYST IN SPECIALLY DESIGNED CVD SET UP

(51) International classification	:B82Y0030000000, C01B0032186000, B82Y0040000000, C23C0016260000, C01B0032162000	(71)**Name of Applicant :** **1)MOHAMMED NAUSHAD ALI** Address of Applicant :Villa number 110, Gitanjali Honey Pool Villa, Seegehalli, Bengaluru Karnataka India
(31) Priority Document No	:NA	(72)**Name of Inventor :** **1)MOHAMMED NAUSHAD ALI**
(32) Priority Date	:NA	
(33) Name of priority country	:NA	
(86) International Application No	:NA	
Filing Date	:NA	
(87) International Publication No	: NA	
(61) Patent of Addition to Application Number	:NA	
Filing Date	:NA	
(62) Divisional to Application Number	:NA	
Filing Date	:NA	

(57) Abstract :
This invention is related to composition and a method for large scale manufacturing of graphene polyhedral structures by catalytic CVD method [chemical vapor deposition] leading conversion of carbonaceous gas into graphene in presence of a specific metallic catalyst in a CVD set up. where a process for the synthesis of Graphene involving specific metallic catalyst of nanometric sizes, with a specific gaseous carbon-containing feedstock, such as biogas/carbon-rich plant waste at a sufficient temperature. Particularly, an improved system electrically heated Furnace reactor for manufacturing of graphene capable of depositing graphene on the metallic substrate by the CVD method. Fig 2

No. of Pages : 30 No. of Claims : 3

(12) PATENT APPLICATION PUBLICATION
(21) Application No.201941054842 A
(19) INDIA
(22) Date of filing of Application :31/12/2019
(43) Publication Date : 02/07/2021

(54) Title of the invention : METHOD AND SYSTEM FOR REAL-TIME HEALTH DATA MANAGEMENT AND PREDICTION OF HEALTH TRENDS FOR PATIENTS

(51) International classification	:G16H0010600000, G06F0021620000, G16H0050200000, G06N0005020000, G16H0050700000
(31) Priority Document No	:NA
(32) Priority Date	:NA
(33) Name of priority country	:NA
(86) International Application No	:NA
Filing Date	:NA
(87) International Publication No	: NA
(61) Patent of Addition to Application Number	:NA
Filing Date	:NA
(62) Divisional to Application Number	:NA
Filing Date	:NA

(71)**Name of Applicant :**
1)WIPRO LIMITED
Address of Applicant :Doddakannelli, Sarjapur Road, Bangalore 560035, Karnataka, India. Karnataka India
(72)**Name of Inventor :**
1)VENKATA SUBRAMANIAN JAYARAMAN
2)SUMITHRA SUNDARESAN

(57) Abstract :
Disclosed herein is a method and system for real-time health data management and prediction of health trends for patients. The system receives patient data from patients, doctors treating patients and one or more external sources. Upon receiving the patient data, system generates three tables for storing, general information, health information and preference information of patients. Thereafter, the system generates a distributed ledger in real-time for each patient based on details of each patient from three tables. The distributed ledger comprises consolidated health data from all the three tables. The system provides a selectively authorized access to the distributed ledger based on biometric information of the patient. Further, based on the consolidated health data, the system manages health data of each of the one or more patients and predicts health trends of each of the one or more patients using Artificial Intelligence (AI) Machine Learning (ML) techniques. FIG. 2a

No. of Pages : 32 No. of Claims : 11

(12) PATENT APPLICATION PUBLICATION
(19) INDIA
(22) Date of filing of Application :27/12/2019
(21) Application No.201943054236 A
(43) Publication Date : 02/07/2021

(54) Title of the invention : A TELESCOPIC PROCESS FOR PREPARATION OF 2-(2-AMINOPHENYLTHIO)BENZOIC ACID OR ITS SALTS AND USE THEREOF

(51) International classification	:C07D0498080000, C07C0323620000, A61Q0003020000, A61K0031192000, C07C0319140000
(31) Priority Document No	:NA
(32) Priority Date	:NA
(33) Name of priority country	:NA
(86) International Application No	:NA
Filing Date	:NA
(87) International Publication No	: NA
(61) Patent of Addition to Application Number	:
Filed on	:01/01/1900
(62) Divisional to Application Number	:NA
Filing Date	:NA

(71)**Name of Applicant :**
1)SREENI LABS PRIVATE LIMITED
Address of Applicant :Sy.No.124/P, Plot No.24, 25, 26, Road No.12, Tech Park, IDA-Industrial Development Area, Nacharam, Secunderabad, Telangana, India Telangana India
(72)**Name of Inventor :**
1)Sreenivasa Reddy MUNDLA

(57) Abstract :
The present invention relates to a telescopic process for the preparation of 2-(2-aminophenylthio) benzoic acid or its salts. The present invention more particularly relates to a telescopic process for the preparation of 2-(2-aminophenylthio) benzoic acid of Formula (V) Formula V or its salts.

No. of Pages : 20 No. of Claims : 12

(12) PATENT APPLICATION PUBLICATION
(19) INDIA
(22) Date of filing of Application :01/01/2020
(21) Application No.202041000044 A
(43) Publication Date : 02/07/2021

(54) Title of the invention : CARDIAC ARREST DETECTOR-CAD

(51) International classification	:A61F0002580000, A61F0002500000, A61F0002680000, A61F0002700000, A61F0002560000
(31) Priority Document No	:NA
(32) Priority Date	:NA
(33) Name of priority country	:NA
(86) International Application No	:NA
Filing Date	:NA
(87) International Publication No	: NA
(61) Patent of Addition to Application Number	:NA
Filing Date	:NA
(62) Divisional to Application Number	:NA
Filing Date	:NA

(71)**Name of Applicant :**
1)MRS. NANCY P
Address of Applicant :DEPARTMENT OF BIOMEDICAL ENGINEERING, SRI SHAKTHI INSTITUTE OF ENGINEERING AND TECHNOLOGY, L&T BYPASS ROAD, COIMBATORE-641 062, TAMILNADU, INDIA. Tamil Nadu India
2)MS. KALAIARASI G.S
3)MS. MANZOOR AHMED J
4)MR. GUGAN R
5)MR. MAHASH I
(72)**Name of Inventor :**
1)MRS. NANCY P
2)MS. KALAIARASI G.S
3)MS. MANZOOR AHMED J
4)MR. GUGAN R
5)MR. MAHASH I

(57) Abstract :
The main motive is to develop a low cost mono functional prosthetic hand for children and adults who have undergone hand amputation or have disabled hand caused by amniotic hand syndrome Annate band syndrome is a rare disease, where the factor is affected by the syndrome which afe the development of the baby's hand and thereby causing undeveloped hands The pros hetic hand uses simple but latest technology involving in understanding the biomechanics of the hand Hand model a measured from the patients hand and designed accordingly with 3-D printing jha movements of the hands are assisted by a series of nylon wires attached to light weight electnc motors, enabling the grasping mechanism of hand.

No. of Pages : 6 No. of Claims : 5

(12) PATENT APPLICATION PUBLICATION
(19) INDIA
(22) Date of filing of Application :01/01/2020
(21) Application No.202041000051 A
(43) Publication Date : 02/07/2021

(54) Title of the invention : 3D-PRINTED DROPLET-BASED MICROREACTOR FOR SYNTHESIS OF MAGNETIC AND METALLIC NANOPARTICLES

(51) International classification	:B33Y0010000000, B01L0003000000, B33Y0030000000, B33Y0070000000, B33Y0080000000
(31) Priority Document No	:NA
(32) Priority Date	:NA
(33) Name of priority country	:NA
(86) International Application No	:NA
Filing Date	:NA
(87) International Publication No	: NA
(61) Patent of Addition to Application Number	:NA
Filing Date	:NA
(62) Divisional to Application Number	:NA
Filing Date	:NA

(71)**Name of Applicant :**
1)SINGH VINI
Address of Applicant :SCHOOL OF ENGINEERING SCIENCE & TECHNOLOGY, UNIVERSITY OF HYDERABAD, TELANGANA , INDIA- 500046. Telangana India
2)SINGH RAJENDER
(72)**Name of Inventor :**
1)SINGH VINI
2)SINGH RAJENDER

(57) Abstract :
A 3D-printed vertical droplet-based microfluidic reactor is developed for the synthesis of magnetic (Fe304) and metallic (Ag, Au) nanoparticles. Fused filament fabrication (FFF) 3D printing technique was used to fabricate the microfluidic reactor using a biodegradable polylactic acid (PLA) filament. The reactor confined the reagents in droplets, and with a simple optimization in flow rates of dispersed (aqueous) and continuous (oil) phases successfully synthesized uniform shaped and size Fe304, Ag, and Au nanoparticles in a continuous laminar flow. The easy-to-operate reactor is first-of-its-kind which uses the force of gravity to synthesize the nanomaterials with good monodispersity at room temperature, without any clogging of channel walls. The designed microfluidic reactor is inexpensive, robust and reusable.

No. of Pages : 8 No. of Claims : 10

(12) PATENT APPLICATION PUBLICATION
(21) Application No.202041000078 A
(19) INDIA
(22) Date of filing of Application :01/01/2020
(43) Publication Date : 02/07/2021

(54) Title of the invention : A STAINLESS STEEL TRAY FOR DEMONSTRATION OF PREPARATION OF ORS (ORAL REHYDRATION SOLUTION)

(51) International classification	:A61K0033140000, A23L0002380000, B65D0071700000, A23L0033160000, G16H0040200000	(71)**Name of Applicant :** **1)V REVATHY** Address of Applicant :PLOT NO 9 DOOR NO 6 IV CROSS I MAIN ROAD ARAVINDAR NAGAR ARIYANKUPPAM PUDUCHERRY Pondicherry India
(31) Priority Document No	:NA	(72)**Name of Inventor :**
(32) Priority Date	:NA	**1)V REVATHY**
(33) Name of priority country	:NA	
(86) International Application No	:NA	
Filing Date	:NA	
(87) International Publication No	: NA	
(61) Patent of Addition to Application Number	:NA	
Filing Date	:NA	
(62) Divisional to Application Number	:NA	
Filing Date	:NA	

(57) Abstract :
In clinical area to demonstrate the preparation of ORS to the mothers & caregivers, my invention focused on preparing a stainless steel tray for demonstration of ORS. This ORS preparation tray is designed in such a way that the articles required for demonstration are placed in fixed containers in a tray so that it avoids spilling & convenient for demonstration. The tray contains 3 fixed concave shaped containers , a thin long slender concave shaped container, ORS sachet, scissor & kidney tray. out of 3 containers,2 medium sized concave shaped containers to place one litre water bottle & the other one for placing stainless steel glass with lid. A thin long slender concave shaped container to place stainless steel spoon.one packet of ORS sachet to mix in one litre boiled filtered water, scissor to cut open the pocket & a kidney tray to discard the waste. This type of tray is very useful in demonstration of preparation of ORS in the clinical settings & thereby we can reduce neonatal & infant mortality &morbidity rates in India.

No. of Pages : 1 No. of Claims : 0

(12) PATENT APPLICATION PUBLICATION
(19) INDIA
(22) Date of filing of Application :22/01/2020

(21) Application No.202044002755 A
(43) Publication Date : 02/07/2021

(54) Title of the invention : METHODS AND DEVICES FOR A SEED GERMINATION PROFILE INDICATOR BASED ON ELECTRICAL CONDUCTIVITY

(51) International classification	:G06K0009000000, G05B0015020000, A01C0001020000, G05B0019416000, G03F0007200000
(31) Priority Document No	:16/726,901
(32) Priority Date	:25/12/2019
(33) Name of priority country	:U.S.A.
(86) International Application No	:NA
Filing Date	:NA
(87) International Publication No	: NA
(61) Patent of Addition to Application Number	:NA
Filing Date	:NA
(62) Divisional to Application Number	:NA
Filing Date	:NA

(71)**Name of Applicant :**
1)Se-cure Pharmaceuticals Ltd.
Address of Applicant :1 Ha'arava street, Airport City Israel
(72)**Name of Inventor :**
1)Ron Gutterman

(57) Abstract :
The present invention discloses methods and devices for a germination profile indicator based on conductivity including: utilizing a target-profile correlation of a target profile of an API from a plant seed to a target germination stage, the target profile includes identifying characteristics of chemical components, and wherein the target germination stage relates to a progress of a seed-germination process of the target profile; utilizing a process-profile correlation of germination-process profiles during the seed-germination process to respective process germination stages, wherein each germination-process profile relates to extracted seed material during the respective process germination stage; comparing characteristics of the target profile to corresponding features in the germination-process profiles; selecting an optimal state of the respective process germination stage to maximize an API quantity; and cross-correlating the optimal state to a conductivity range for the seed in a soak water within a given temperature range to identify a temperature-dependent germination stopping condition. [FIGURE 3]

No. of Pages : 29 No. of Claims : 15

(12) PATENT APPLICATION PUBLICATION
(21) Application No.202044023291 A
(19) INDIA
(22) Date of filing of Application :03/06/2020
(43) Publication Date : 02/07/2021

(54) Title of the invention : METHOD FOR GENERATING, ANALYZING AND EVALUATING EQUIPPED RESIDENTIAL URBAN DISTRICTS

(51) International classification	:G06F0017500000, E04B0001343000, E04H0001000000, E01C0001000000, G06T0017050000	(71)**Name of Applicant :** **1)CITYTHINKING, S.L.** Address of Applicant :Ctra. de la Esclusa, 9 acc., Sevilla 41011, Spain Spain
(31) Priority Document No	:P201931169	(72)**Name of Inventor :** **1)DE CARDENAS DOMINGUEZ ADAME, Jos Mara**
(32) Priority Date	:30/12/2019	
(33) Name of priority country	:Spain	
(86) International Application No	:NA	
Filing Date	:NA	
(87) International Publication No	: NA	
(61) Patent of Addition to Application Number	:NA	
Filing Date	:NA	
(62) Divisional to Application Number	:NA	
Filing Date	:NA	

(57) Abstract :
The method comprises defining the lot of the district, the pre-existing open spaces and building areas; the location of tier 1 facilities; the location of the connection points; the location of the origin point of the district; defining the angle of inclination of the supporting orthogonal grid within the district; drawing tier 1 roads; generating a superblock base grid; drawing tier 2 roads; generating superblocks, generating tier 2 open spaces; generating tier 2 and tier 3 facilities; generating the block base grid; drawing tier 3 roads; generating blocks, assigning residential and facilities typologies; generating the optimized volume of both residential and facilities buildings; and generating all functional, environmental and socio-economic indicators. Figure 2

No. of Pages : 46 No. of Claims : 18

(12) PATENT APPLICATION PUBLICATION
(19) INDIA
(22) Date of filing of Application :16/07/2020
(21) Application No.202044030302 A
(43) Publication Date : 02/07/2021

(54) Title of the invention : ELECTROMAGNETIC HEATING APPLIANCE

(51) International classification	:H05B0006060000, H05B0006120000, H05B0006640000, H05B0006660000, H05B0001020000
(31) Priority Document No	:201922391190.5
(32) Priority Date	:27/12/2019
(33) Name of priority country	:China
(86) International Application No	:NA
Filing Date	:NA
(87) International Publication No	: NA
(61) Patent of Addition to Application Number	:NA
Filing Date	:NA
(62) Divisional to Application Number	:NA
Filing Date	:NA

(71)**Name of Applicant :**
1)FOSHAN SHUNDE MIDEA ELECTRICAL HEATING APPLIANCES MANUFACTURING CO., LTD.
Address of Applicant :SAN LE ROAD #19, BEIJIAO, SHUNDE, FOSHAN, GUANGDONG 528311, CHINA China
(72)**Name of Inventor :**
1)MA Richun

(57) Abstract :
ELECTROMAGNETIC HEATING APPLIANCE. The invention provides an electromagnetic heating appliance, comprising an appliance body and at least one identification agency. The appliance body is provided with a working desk, and includes an electromagnetic heating device, and the at least one identification agency cooperates with the appliance body, to identify whether there is an item suitable for electromagnetic heating on the working desk. The electromagnetic heating appliance provided by the invention has an identification agency added to the application body, so that the electromagnetic heating appliance has a dual identification function, which can identify whether there is cookware on the working desk, and whether the cookware on the working desk is suitable for electromagnetic heating. It is conducive to preventing the electromagnetic heating appliance from heating item that is not suitable for electromagnetic heating, and thus prevent excessive heating of internal components of the electromagnetic heating appliance due to heating of item that is not suitable for electromagnetic heating, thereby damaging the electromagnetic heating appliance. It plays a protective role for the electromagnetic heating appliance and improves the reliability of the electromagnetic heating appliance. Fig.3

No. of Pages : 45 No. of Claims : 12

(12) PATENT APPLICATION PUBLICATION
(21) Application No.202044037247 A
(19) INDIA
(22) Date of filing of Application :28/08/2020
(43) Publication Date : 02/07/2021

(54) Title of the invention : POWER SUPPLY EQUIPMENT FOR WORK VEHICLES

(51) International classification	:G01N0033533000, H05B0031000000, B01J0020286000, C02F0003280000, B63C0007260000
(31) Priority Document No	:2019-234401
(32) Priority Date	:25/12/2019
(33) Name of priority country	:Japan
(86) International Application No	:NA
Filing Date	:NA
(87) International Publication No	: NA
(61) Patent of Addition to Application Number	:NA
Filing Date	:NA
(62) Divisional to Application Number	:NA
Filing Date	:NA

(71)**Name of Applicant :**
1)ISEKI & CO., LTD.
Address of Applicant :700 Umaki-cho, Matsuyama-shi, Ehime-ken, Japan Japan
(72)**Name of Inventor :**
1)TAKAHASHI, Yohei

(57) Abstract :
ABSTRACT POWER SUPPLY EQUIPMENT FOR WORK VEHICLES [Object] An object of the present invention is to provide a work vehicle provided with a power supply equipment (cigarette socket) near the operator's seat, with a simple configuration to attach the power supply equipment so that even when it starts raining or when the operator spills water over the power supply equipment from the cup he/she is holding, the power supply equipment is protected from breaking. [Solution] A power supply equipment for a work vehicle comprises: a cigarette socket bracket 5 having a vertical attachment surface 5a provided on a part of a machine wall 32 surrounding an operator's seat 25 of the work vehicle; and a cigarette socket 12 attached to the vertical attachment surface 5a in such a manner that its insertion opening 12a is vertical. [Representative Drawing] Fig. 7

No. of Pages : 22 No. of Claims : 4

(12) PATENT APPLICATION PUBLICATION
(19) INDIA
(22) Date of filing of Application :08/09/2020
(21) Application No.202044038753 A
(43) Publication Date : 02/07/2021

(54) Title of the invention : N-BIT SUCCESSIVE APPROXIMATION REGISTER ANALOG-TO-DIGITAL CONVERTER AND METHOD FOR CALIBRATING THE SAME, RECEIVER, BASE STATION AND MOBILE DEVICE

(51) International classification	:H03M0001460000, H03M0001120000, H03M0001060000, H03K0005240000, G01R0019000000
(31) Priority Document No	:16/728,226
(32) Priority Date	:27/12/2019
(33) Name of priority country	:U.S.A.
(86) International Application No	:NA
Filing Date	:NA
(87) International Publication No	: NA
(61) Patent of Addition to Application Number	:NA
Filing Date	:NA
(62) Divisional to Application Number	:NA
Filing Date	:NA

(71)**Name of Applicant :**
1)INTEL CORPORATION
Address of Applicant :2200 Mission College Boulevard, Santa Clara, California 95054, USA U.S.A.
(72)**Name of Inventor :**
1)Albert MOLINA
2)MARTIN CLARA
3)MATTEO CAMPONESCHI
4)CHRISTIAN LINDHOLM
5)KAMERAN AZADET

(57) Abstract :
ABSTRACT n-BIT SUCCESSIVE APPROXIMATION REGISTER ANALOG-TO-DIGITAL CONVERTER AND METHOD FOR CALIBRATING THE SAME, RECEIVER, BASE STATION AND MOBILE DEVICE A n-bit Successive Approximation Register Analog-to-Digital Converter, SAR ADC, is provided. The SAR ADC comprises a respective plurality of sam-pling cells for each bit of the n-bit of the SAR ADC. Each sampling cell comprises a capacitive element coupled to a cell output of the sampling cell in order to provide a cell output signal. Further, each sampling cell comprises a first cell input for receiving a first signal, and a first switch circuit capable of selectively coupling the first cell input to the capacitive element. Each cell additionally comprises a second cell input for receiving a second signal, and a third cell input for receiving a third signal. The third signal exhibits opposite polarity compared to the second signal. Each sampling cell comprises a second switch circuit capable of selectively coupling one of the second cell input and the third cell input to the capacitive element. The SAR ADC further comprises at least one comparator circuit coupled to the sampling cells. The at least one comparator circuit is configured to output a comparison signal based on the cell output signals of the sampling cells. Additionally, the SAR ADC comprises a calibration circuit configured to supply at least one respective control signal to the respective second switch circuit of the sampling cells for controlling the second switch circuits. Fig. 1

No. of Pages : 48 No. of Claims : 25

(12) PATENT APPLICATION PUBLICATION
(21) Application No.202044039091 A
(19) INDIA
(22) Date of filing of Application :10/09/2020
(43) Publication Date : 02/07/2021

(54) Title of the invention : APPARATUS AND METHOD FOR ADAPTIVELY SCHEDULING WORK ON HETEROGENEOUS PROCESSING RESOURCES

(51) International classification	:G06F0009500000, G06F0009480000, G06F0009455000, G06F0009300000, A47J0043046000	(71)**Name of Applicant :** **1)Intel Corporation** Address of Applicant :2200 Mission College Boulevard, Santa Clara, California 95054, USA U.S.A.
(31) Priority Document No	:16/728,617	(72)**Name of Inventor :** **1)Eliezer Weissmann**
(32) Priority Date	:27/12/2019	**2)Omer Barak**
(33) Name of priority country	:U.S.A.	**3)Rajshree Chabukswar**
(86) International Application No	:NA	**4)Russell Fenger**
Filing Date	:NA	**5)Eugene Gorbatov**
(87) International Publication No	: NA	**6)Monica Gupta**
(61) Patent of Addition to Application Number	:NA	**7)Julius Mandelblat**
Filing Date	:NA	**8)Nir Misgav**
(62) Divisional to Application Number	:NA	**9)Efraim Rotem**
Filing Date	:NA	**10)Ahmad Yasin**

(57) Abstract :
An apparatus and method for intelligently scheduling threads across a plurality of logical processors. For example, one embodiment of a processor comprises: a plurality of logical processors including comprising one or more of a first logical processor type and a second logical processor type, the first logical processor type associated with a first core type and the second logical processor type associated with a second core type; a scheduler to schedule a plurality of threads for execution on the plurality of logical processors in accordance with performance data associated with the plurality of threads; wherein if the performance data indicates that a new thread should be executed on a logical processor of the first logical processor type, but all logical processors of the first logical processor type are busy, the scheduler to determine whether to migrate a second thread from the logical processors of the first logical processor type to a logical processor of the second logical processor type based on an evaluation of first and second performance values associated with execution of the first thread on the first or second logical processor types, respectively, and further based on an evaluation of third and fourth performance values associated with execution of the second thread on the first or second logical processor types, respectively.

No. of Pages : 88 No. of Claims : 27

(12) PATENT APPLICATION PUBLICATION
(19) INDIA
(22) Date of filing of Application :10/09/2020

(21) Application No.202044039199 A
(43) Publication Date : 02/07/2021

(54) Title of the invention : APPARATUS AND METHOD FOR MULTI-ADAPTER ENCODING

(51) International classification	:G06T0001200000, H04N0021810000, G06F0009300000, H04N0005770000, G06F0009500000
(31) Priority Document No	:16/728,749
(32) Priority Date	:27/12/2019
(33) Name of priority country	:U.S.A.
(86) International Application No	:NA
Filing Date	:NA
(87) International Publication No	: NA
(61) Patent of Addition to Application Number	:NA
Filing Date	:NA
(62) Divisional to Application Number	:NA
Filing Date	:NA

(71)**Name of Applicant :**
1)Intel Corporation
Address of Applicant :2200 Mission College Boulevard, Santa Clara, California 95054, USA U.S.A.
(72)**Name of Inventor :**
1)Changliang Wang
2)Penne Lee
3)Dmitry Ermilov

(57) Abstract :
An apparatus and method for multi-adapter and/or multi-pass encoding on dual graphics processors. For example, one embodiment of a processor comprises: a central processor integrated on a first die, the central processor comprising a plurality of cores to execute instructions and process data; an first graphics processor integrated on the first die, the first graphics processor comprising media processing circuitry to perform one or more preliminary lookahead operations on video content to generate lookahead statistics; an interconnect to couple the first graphics processor to a lookahead buffer, the first graphics processor to transmit the lookahead statistics over the interconnect to the lookahead buffer; wherein the lookahead statistics are to be used by a second graphics processor to encode the video content to generate encoded video.

No. of Pages : 103 No. of Claims : 28

(12) PATENT APPLICATION PUBLICATION
(21) Application No.202044039434 A
(19) INDIA
(22) Date of filing of Application :11/09/2020
(43) Publication Date : 02/07/2021

(54) Title of the invention : APPARATUSES, METHODS, AND SYSTEMS FOR INSTRUCTIONS OF A MATRIX OPERATIONS ACCELERATOR

(51) International classification	:G06F0009300000, G06F0009380000, G06F0007544000, G06N0003063000, G06T0015000000
(31) Priority Document No	:16/729,361
(32) Priority Date	:28/12/2019
(33) Name of priority country	:U.S.A.
(86) International Application No	:NA
Filing Date	:NA
(87) International Publication No	: NA
(61) Patent of Addition to Application Number	:NA
Filing Date	:NA
(62) Divisional to Application Number	:NA
Filing Date	:NA

(71)**Name of Applicant :**
1)Intel Corporation
Address of Applicant :2200 Mission College Boulevard, Santa Clara, California 95054, USA U.S.A.
(72)**Name of Inventor :**
1)Amit GRADSTEIN
2)Simon RUBANOVICH
3)Sagi MELLER
4)Saeed KHAROUF
5)Gavri BERGER
6)Zeev SPERBER
7)Jose YALLOUZ
8)Ron SCHNEIDER

(57) Abstract :
Systems, methods, and apparatuses relating to a matrix operations accelerator are described. In one embodiment, a processor includes a matrix operations accelerator circuit that includes a two-dimensional grid of fused multiply accumulate circuits that is switchable to a scheduling mode for execution of a decoded single instruction where the matrix operations accelerator circuit loads a first buffer of the two-dimensional grid of fused multiply accumulate circuits from a first plurality of registers that represents a first input two-dimensional matrix, checks if a second buffer of the two-dimensional grid of fused multiply accumulate circuits stores an immediately prior input two-dimension matrix that is the same as a second input two-dimensional matrix from a second plurality of registers that represents the first input two-dimensional matrix, and when the second buffer of the two-dimensional grid of fused multiply accumulate circuits stores the immediately prior input two-dimension matrix, from execution of a previous instruction, that is the same as the second input two-dimensional matrix: prevents reclamation of the second buffer between execution of the previous instruction and the decoded single instruction, performs an operation on the first input two-dimensional matrix from the first buffer and the immediately prior input two-dimension matrix from the second buffer to produce a resultant, and stores the resultant in resultant storage, and when the second buffer of the two-dimensional grid of fused multiply accumulate circuits does not store the immediately prior input two-dimension matrix, from execution of the previous instruction, that is the same as the second input two-dimensional matrix: loads the second input two-dimensional matrix into the second buffer of the two-dimensional grid of fused multiply accumulate circuits, performs the operation on the first input two-dimensional matrix from the first buffer and the second input two-dimension matrix from the second buffer to produce a resultant, and stores the resultant in the resultant storage.

No. of Pages : 152 No. of Claims : 24

(12) PATENT APPLICATION PUBLICATION
(19) INDIA
(22) Date of filing of Application :11/09/2020

(21) Application No.202044039477 A
(43) Publication Date : 02/07/2021

(54) Title of the invention : APPARATUS AND METHOD FOR QUANTIZED CONVERGENT DIRECTION-BASED RAY SORTING

(51) International classification	:G06T0015060000, G01V0001280000, G06T0015550000, G06T0015800000, G06T0015500000
(31) Priority Document No	:16/728,375
(32) Priority Date	:27/12/2019
(33) Name of priority country	:U.S.A.
(86) International Application No	:NA
Filing Date	:NA
(87) International Publication No	: NA
(61) Patent of Addition to Application Number	:NA
Filing Date	:NA
(62) Divisional to Application Number	:NA
Filing Date	:NA

(71)**Name of Applicant :**
1)Intel Corporation
Address of Applicant :2200 Mission College Boulevard, Santa Clara, California 95054, USA U.S.A.
(72)**Name of Inventor :**
1)Karol Szerszen
2)Prasoonkumar Surti
3)Gabor Liktor
4)Karthik Vaidyanathan
5)Sven Woop

(57) Abstract :
Apparatus and method for grouping rays based on quantized ray directions. For example, one embodiment of an apparatus comprises: An apparatus comprising: a ray generator to generate a plurality of rays; ray direction evaluation circuitry/logic to generate approximate ray direction data for each of the plurality of rays; ray sorting circuitry/logic to sort the rays into a plurality of ray queues based, at least in part, on the approximate ray direction data.

No. of Pages : 126 No. of Claims : 27

(12) PATENT APPLICATION PUBLICATION
(19) INDIA
(22) Date of filing of Application :21/09/2020
(21) Application No.202044040728 A
(43) Publication Date : 02/07/2021

(54) Title of the invention : SYSTEM AND METHOD FOR CONFIGURABLE SYSTOLIC ARRAY WITH PARTIAL READ/WRITE

(51) International classification	:G06F0015800000, G06F0017160000, G06T0005200000, G06N0003063000, H04H0040900000
(31) Priority Document No	:16/729,381
(32) Priority Date	:28/12/2019
(33) Name of priority country	:U.S.A.
(86) International Application No	:NA
Filing Date	:NA
(87) International Publication No	: NA
(61) Patent of Addition to Application Number	:NA
Filing Date	:NA
(62) Divisional to Application Number	:NA
Filing Date	:NA

(71)**Name of Applicant :**
1)INTEL CORPORATION
Address of Applicant :2200 Mission College Boulevard, Santa Clara, California 95054, USA U.S.A.
(72)**Name of Inventor :**
1)Kamlesh R. PILLAI
2)Gurpreet Singh KALSI
3)Christopher HUGHES

(57) Abstract :
ABSTRACT SYSTEM AND METHOD FOR RECONFIGURABLE SYSTOLIC ARRAY WITH PARTIAL READ/WRITE A system is provided that includes a reconfigurable systolic array circuitry. The reconfigurable systolic array circuitry includes a first circuit block comprising one or more groups of processing elements and a second circuit block comprising one or more groups of processing elements. The reconfigurable systolic array circuitry further includes a first bias addition with accumulation circuitry configured to add a matrix bias to an accumulated value, to a multiplication product, or to a combination thereof. The reconfigurable systolic array circuitry additionally includes a first routing circuitry configured to route derivations from the first circuit block into the second circuit block, from the first circuit block into the first bias addition with accumulation circuitry, or into a combination thereof.

No. of Pages : 49 No. of Claims : 20

(12) PATENT APPLICATION PUBLICATION
(21) Application No.202044041215 A
(19) INDIA
(22) Date of filing of Application :23/09/2020
(43) Publication Date : 02/07/2021

(54) Title of the invention : METHOD AND APPARATUS FOR MULTI-KEY TOTAL MEMORY ENCRYPTION BASED ON DYNAMIC KEY DERIVATION

(51) International classification	:H04L0009080000, G06F0009300000, H04L0009320000, H04W0012040000, H04L0009140000
(31) Priority Document No	:16/728,712
(32) Priority Date	:27/12/2019
(33) Name of priority country	:U.S.A.
(86) International Application No	:NA
Filing Date	:NA
(87) International Publication No	: NA
(61) Patent of Addition to Application Number	:NA
Filing Date	:NA
(62) Divisional to Application Number	:NA
Filing Date	:NA

(71)**Name of Applicant :**
1)INTEL CORPORATION
Address of Applicant :2200 Mission College Boulevard, Santa Clara, California 95054, USA U.S.A.
(72)**Name of Inventor :**
1)Hormuzd M. KHOSRAVI
2)Siddhartha CHHABRA
3)Vincent VON BOKERN
4)Barry E. HUNTLEY
5)Vedvyas SHANBHOGUE

(57) Abstract :
ABSTRACT METHOD AND APPARATUS FOR MULTI-KEY TOTAL MEMORY ENCRYPTION BASED ON DYNAMIC KEY DERIVATION Disclosed embodiments relate to Multi-Key Total Memory Encryption based on dynamic key derivation. In one example, a processor includes cryptographic circuitry, storage with multiple key splits and multiple full encryption keys, fetch and decode circuitry to fetch and decode an instruction specifying an opcode, an address, and a keyID, the opcode calling for the processor to use the address to determine whether to use an explicit key, in which case the keyID is used to select one of the multiple full encryption keys to use as a cryptographic key, and, otherwise, the processor is to dynamically derive the cryptographic key by using the keyID to select one of the multiple key splits, and provide the key split and a root key to a key derivation function to derive the cryptographic key, which is used by the encryption circuitry to perform a cryptographic operation on an the addressed memory location.

No. of Pages : 83 No. of Claims : 21

(12) PATENT APPLICATION PUBLICATION
(19) INDIA
(22) Date of filing of Application :23/09/2020
(21) Application No.202044041298 A
(43) Publication Date : 02/07/2021

(54) Title of the invention : APPARATUS AND METHOD FOR USING ALPHA VALUES TO IMPROVE RAY TRACING EFFICIENCY

(51) International classification	:G06T0015060000, G06T0015800000, G06T0015550000, G01N0023040000, H04L0001000000
(31) Priority Document No	:16/728,912
(32) Priority Date	:27/12/2019
(33) Name of priority country	:U.S.A.
(86) International Application No	:NA
Filing Date	:NA
(87) International Publication No	: NA
(61) Patent of Addition to Application Number	:NA
Filing Date	:NA
(62) Divisional to Application Number	:NA
Filing Date	:NA

(71)**Name of Applicant :**
1)Intel Corporation
Address of Applicant :2200 Mission College Boulevard, Santa Clara, California 95054 U.S.A.
(72)**Name of Inventor :**
1)HOLGER GRUEN

(57) Abstract :
Apparatus and method for using alpha values to improve ray tracing efficiency. For example, one embodiment of an apparatus comprises: a ray generator to generate a plurality of rays; ray direction evaluation circuitry/logic to generate approximate ray direction data for each of the plurality of rays; and ray sorting circuitry/logic to sort the rays into a plurality of ray queues based, at least in part, on the approximate ray direction data.

No. of Pages : 127 No. of Claims : 25

(12) PATENT APPLICATION PUBLICATION
(19) INDIA
(22) Date of filing of Application :25/09/2020

(21) Application No.202044041704 A
(43) Publication Date : 02/07/2021

(54) Title of the invention : NETWORK COMPONENT, SYSTEM AND METHOD

(51) International classification	:H04L0029060000, H04W0052020000, H04W0072120000, H04W0084120000, H04W0056000000
(31) Priority Document No	:16/726,972
(32) Priority Date	:26/12/2019
(33) Name of priority country	:U.S.A.
(86) International Application No	:NA
Filing Date	:NA
(87) International Publication No	: NA
(61) Patent of Addition to Application Number	:NA
Filing Date	:NA
(62) Divisional to Application Number	:NA
Filing Date	:NA

(71)**Name of Applicant :**
1)INTEL CORPORATION
Address of Applicant :2200 Mission College Boulevard, Santa Clara, California 95054, USA U.S.A.
(72)**Name of Inventor :**
1)Ofer HAREUVENI
2)Rony ROSS
3)Daniel BRAVO
4)Ehud RESHEF
5)Laurent CARIOU

(57) Abstract :
According to various aspects, a network component may include: one or more processors configured to: generate a first message to a wireless network client, the first message including a request to report information about wireless networks within communication range of the wireless network client; assign a scheduling group of a plurality of scheduling groups to the wireless network client based on the information; schedule one or more transmissions in accordance with a first wireless network protocol to the wireless network client in accordance with the schedule group assigned to the wireless network client; generate a second message to the wireless network client, the second message including an instruction to schedule one or more transmissions in accordance with a second wireless network protocol from the wireless network client in accordance with the schedule group assigned to the wireless network client.

No. of Pages : 73 No. of Claims : 20

(12) PATENT APPLICATION PUBLICATION
(19) INDIA
(22) Date of filing of Application :25/09/2020

(21) Application No.202044041734 A
(43) Publication Date : 02/07/2021

(54) Title of the invention : ZERO LATENCY BSS TRANSITION WITH ON-CHANNEL TUNNELING (OCT)

(51) International classification	:H04L0029060000, H04W0084120000, H04W0012060000, A61B0003100000, H04L0005000000
(31) Priority Document No	:16/728,344
(32) Priority Date	:27/12/2019
(33) Name of priority country	:U.S.A.
(86) International Application No	:NA
Filing Date	:NA
(87) International Publication No	: NA
(61) Patent of Addition to Application Number	:NA
Filing Date	:NA
(62) Divisional to Application Number	:NA
Filing Date	:NA

(71)**Name of Applicant :**
1)Intel Corporation
Address of Applicant :2200 Mission College Boulevard, Santa Clara, California 95054 U.S.A.
(72)**Name of Inventor :**
1)Laurent CARIOU
2)Carlos Cordeiro
3)Daniel F. Bravo
4)Ehud Reshef

(57) Abstract :
Embodiments of transitioning between BSSs using on-channel tunneling (OCT) are generally described herein. OCT procedures are used for scanning and association with a co-located or non-co-located peer AP. The OCT procedures include communicating a Probe/Re-authentication/Re-association Request frame from a STA using an OCT Request frame to the peer AP and receiving a Probe/Re-authentication/Re-association Response frame from the peer AP using another OCT Request frame. The communications between the STA and the AP are either in the same frequency band or a different frequency band as the OCT communications between the AP and the peer AP.

No. of Pages : 70 No. of Claims : 20

(12) PATENT APPLICATION PUBLICATION
(19) INDIA
(22) Date of filing of Application :10/12/2020

(21) Application No.202044053756 A
(43) Publication Date : 02/07/2021

(54) Title of the invention : PRUNING INDEXES TO ENHANCE DATABASE QUERY PROCESSING

(51) International classification	:G06F0016250000, G06F0016220000, G06F0016245500, A01G0017000000, G06F0016245300
(31) Priority Document No	:16/727,315
(32) Priority Date	:26/12/2019
(33) Name of priority country	:U.S.A.
(86) International Application No	:NA
Filing Date	:NA
(87) International Publication No	: NA
(61) Patent of Addition to Application Number	:NA
Filing Date	:NA
(62) Divisional to Application Number	:NA
Filing Date	:NA

(71)**Name of Applicant :**
1)SNOWFLAKE INC.
Address of Applicant :450 Concar Dr, San Mateo, California 94402, United States of America U.S.A.
(72)**Name of Inventor :**
1)Thierry Cruanes
2)Benoit Dageville
3)Ismail Oukid
4)Stefan Richter

(57) Abstract :
A source table organized into a set of micro-partitions is accessed by a network-based data warehouse. A pruning index is generated based on the source table. The pruning index comprises a set of filters that indicate locations of distinct values in each column of the source table. A query directed at the source table is received at the network-based data warehouse. The query is processed using the pruning index. The processing of the query comprises pruning the set of micro-partitions of the source table to scan for data matching the query, the pruning of the plurality of micro-partitions comprising identifying, using the pruning index, a sub-set of micro-partitions to scan for the data matching the query.

No. of Pages : 61 No. of Claims : 30

(12) PATENT APPLICATION PUBLICATION
(19) INDIA
(22) Date of filing of Application :14/12/2020
(21) Application No.202044054252 A
(43) Publication Date : 02/07/2021

(54) Title of the invention : YARN WINDING MACHINE

(51) International classification	:B65H0067080000, H01M0008047460, B65H0069060000, F24F0011360000, H01M0008043200
(31) Priority Document No	:2019- 239287
(32) Priority Date	:27/12/2019
(33) Name of priority country	:Japan
(86) International Application No	:PCT//
Filing Date	:01/01/1900
(87) International Publication No	: NA
(61) Patent of Addition to Application Number	:NA
Filing Date	:NA
(62) Divisional to Application Number	:NA
Filing Date	:NA

(71)**Name of Applicant :**
1)MURATA MACHINERY, LTD.
Address of Applicant :3 Minami Ochiai-cho, Kisshoin, Minami-ku, Kyoto-shi, Kyoto 601-8326, Japan Japan
(72)**Name of Inventor :**
1)MURAYAMA, Kenichi
2)TERAO, Yuho
3)YAMAMOTO, Atsushi
4)UEYAMA, Shota

(57) Abstract :
ABSTRACT YARN WINDING MACHINE A unit controller (15) of an automatic winder (1) executes a stop control to stop a yarn joining operation upon determining, based on the result of detection by an upper yarn sensor (44), that an upper-yarn catching and guiding member (36) cannot normally catch a yarn Y (upper yarn Y2) on the winding section (13) side during the yarn joining operation. When an operation button (53) is operated after the stop control, the unit controller (15) determines, based on the result of detection by the rotation number sensor (45), whether a package (P) has been rotated in a period between execution of a stop control by the unit controller (15) and operation of the operation button (53). Most Illustrative Drawing: FIG. 7

No. of Pages : 41 No. of Claims : 5

(12) PATENT APPLICATION PUBLICATION
(19) INDIA
(22) Date of filing of Application :17/12/2020
(21) Application No.202044054924 A
(43) Publication Date : 02/07/2021

(54) Title of the invention : FUEL SUPPLY DEVICE FOR VEHICLE

(51) International classification	:F02M0037100000, F02M0037000000, B60K0015030000, B62J0037000000, F02M0037500000
(31) Priority Document No	:2019-235020
(32) Priority Date	:25/12/2019
(33) Name of priority country	:Japan
(86) International Application No	:PCT//
Filing Date	:01/01/1900
(87) International Publication No	: NA
(61) Patent of Addition to Application Number	:NA
Filing Date	:NA
(62) Divisional to Application Number	:NA
Filing Date	:NA

(71)**Name of Applicant :**
1)KEIHIN CORPORATION
Address of Applicant :26-2, Nishishinjuku 1-chome, Shinjuku-ku, Tokyo, Japan Japan
(72)**Name of Inventor :**
1)NAITO, Toshihiko
2)OI, Takumi

(57) Abstract :
[ABSTRACT] [SUBJECT] To provide a fuel supply device for a vehicle, in which a fuel pump is held in a housing so that an axis of the fuel pump is substantially parallel to a closed surface of a lid, and even if the fuel supply device is configured such that the closed surface of the lid is disposed so as to be inclined with respect to a horizontal plane in a state where an opening of a fuel tank has been closed by the lid, inclination of the fuel supply device due to such an inclination of the closed surface, that is, lateral protrusion of the fuel supply device can be effectively restrained, thereby contributing to reduction in size of the fuel tank. [MEANS FOR SOLUTION] A closed surface 80 of a lid 8 is disposed so as to be inclined with respect to a horizontal plane as seen in a projection plane orthogonal to an axis Lp of a fuel pump P, in a state where an opening 7 of a fuel tank has been closed by the lid 8. A housing 20 that is supported on the lid 8 and holds the fuel pump P includes a communication passage 32 providing communication between a discharge part Pco of the fuel pump P and a fuel outlet pipe 8a of the lid 8. The communication passage 32 includes an inclined passage part 32v inclined to an upper end side of the closed surface 80 with respect to a reference line Lx orthogonal to the closed surface 80, as seen in the projection plane orthogonal to the axis Lp of the fuel pump P. [SELECTED DRAWING] FIG. 1

No. of Pages : 23 No. of Claims : 4

(12) PATENT APPLICATION PUBLICATION
(19) INDIA
(22) Date of filing of Application :17/12/2020

(21) Application No.202044054925 A
(43) Publication Date : 02/07/2021

(54) Title of the invention : ELECTRIC COMPRESSOR

(51) International classification	:F04B0035040000, F04B0039120000, F04C0018020000, F04C0023000000, H02K0007140000
(31) Priority Document No	:2019-236674
(32) Priority Date	:26/12/2019
(33) Name of priority country	:Japan
(86) International Application No	:PCT//
Filing Date	:01/01/1900
(87) International Publication No	: NA
(61) Patent of Addition to Application Number	:NA
Filing Date	:NA
(62) Divisional to Application Number	:NA
Filing Date	:NA

(71)**Name of Applicant :**
1)KABUSHIKI KAISHA TOYOTA JIDOSHOKKI
Address of Applicant :2-1, Toyoda-cho, Kariya-shi, Aichi-ken, Japan Japan
(72)**Name of Inventor :**
1)MOTONOBU FUNATO
2)MIKIO YOSHIDA
3)KENJI HAYAKAWA
4)YUSUKE KINOSHITA

(57) Abstract :
An electric compressor (10) includes a compression portion (16), an electric motor (17), a drive circuit (43) that has a circuit board (44) on which electronic components (45, 46) are mounted, a housing (11), and a resin member (50). At least one of the electronic components (45, 46) is held by the resin member (50) with the resin member (50) sandwiched between the at least one of the electronic components (45, 46) and the circuit board (44). The electric compressor (10) includes a first metal member (61) that is in contact with the at least one of the electronic components (45, 46), and thermally connected to the housing (11), a second metal member (62) that is disposed in the resin member (50), and a bolt (63) by which the first metal member (61) and the second metal member (62) are fastened with each other. [FIGURE 2]

No. of Pages : 22 No. of Claims : 4

(12) PATENT APPLICATION PUBLICATION
(21) Application No.202044055094 A
(19) INDIA
(22) Date of filing of Application :18/12/2020
(43) Publication Date : 02/07/2021

(54) Title of the invention : CARRIER-BASED PULSE WIDTH MODULATION CONTROL FOR BACK-TO-BACK VOLTAGE SOURCE CONVERTERS

(51) International classification	:H02M0007483000, H02M0007490000, H02M0007538700, H02M0001320000, H02M0007000000
(31) Priority Document No	:16/730,301
(32) Priority Date	:30/12/2019
(33) Name of priority country	:U.S.A.
(86) International Application No	:NA
Filing Date	:NA
(87) International Publication No	: NA
(61) Patent of Addition to Application Number	:NA
Filing Date	:NA
(62) Divisional to Application Number	:NA
Filing Date	:NA

(71)**Name of Applicant :**
1)GENERAL ELECTRIC COMPANY
Address of Applicant :1 River Road Schenectady, New York 12345, USA U.S.A.
(72)**Name of Inventor :**
1)Joseph Kiran Banda
2)Kapil Jha
3)Hridya Ittamveettil

(57) Abstract :
PLEASE SEE THE ATTACHED SPECIFICATION

No. of Pages : 29 No. of Claims : 20

(12) PATENT APPLICATION PUBLICATION
(19) INDIA
(22) Date of filing of Application :18/12/2020

(21) Application No.202044055169 A
(43) Publication Date : 02/07/2021

(54) Title of the invention : OPTICAL FIBER

(51) International classification	:C03C0013040000, G02B0006020000, C03C0003060000, C09D0011322000, G02B0006036000
(31) Priority Document No	:2019-239383
(32) Priority Date	:27/12/2019
(33) Name of priority country	:Japan
(86) International Application No	:PCT//
Filing Date	:01/01/1900
(87) International Publication No	: NA
(61) Patent of Addition to Application Number	:NA
Filing Date	:NA
(62) Divisional to Application Number	:NA
Filing Date	:NA

(71)**Name of Applicant :**
1)SUMITOMO ELECTRIC INDUSTRIES, LTD.
Address of Applicant :5-33, Kitahama 4-chome, Chuo-ku, Osaka-shi, Osaka 541-0041, Japan Japan
(72)**Name of Inventor :**
1)SUZUKI, Masato
2)HASEGAWA, Takemi
3)KAWAGUCHI, Yuki

(57) Abstract :
An optical fiber includes a core and a cladding. The core contains silica glass and includes a central portion (part having a diameter of 0.5 m or more and 4 m or less). The central portion has the central axis of the optical fiber. The cladding contains silica glass and surrounds the core. The core contains chlorine. A chlorine concentration averaged in the entire core is 10,000 ppm or more and 50,000 ppm or less. The chlorine concentration averaged in the entire core minus a chlorine concentration averaged in the central portion is 4,500 ppm or more and 13,500 ppm or less. [FIGURE 2]

No. of Pages : 27 No. of Claims : 10

(12) PATENT APPLICATION PUBLICATION
(19) INDIA
(22) Date of filing of Application :21/12/2020

(21) Application No.202044055460 A
(43) Publication Date : 02/07/2021

(54) Title of the invention : ELECTRIC COMPRESSOR

(51) International classification	:H02K0001270000, H02K0007140000, F04C0023000000, H02K0001180000, F04D0025060000
(31) Priority Document No	:2019-236288
(32) Priority Date	:26/12/2019
(33) Name of priority country	:Japan
(86) International Application No	:PCT//
Filing Date	:01/01/1900
(87) International Publication No	: NA
(61) Patent of Addition to Application Number	:NA
Filing Date	:NA
(62) Divisional to Application Number	:NA
Filing Date	:NA

(71)**Name of Applicant :**
1)KABUSHIKI KAISHA TOYOTA JIDOSHOKKI
Address of Applicant :2-1, Toyoda-cho, Kariya-shi, Aichi-ken, Japan Japan
(72)**Name of Inventor :**
1)HAMANA, Shozo
2)OTSUBO, Masaki
3)TAKAYAMA, Hiroki
4)ADANIYA, Taku

(57) Abstract :
An electric compressor includes a motor mechanism (5) that includes a rotor (5b). The rotor (5b) includes a rotor body (51) formed of steel sheets (510) laminated in a direction of an axis (O) of a drive shaft (3), a pair of plates (53, 54) for holding the rotor body (51) between the plates (53, 54) in the direction of the axis (O), and a fastener (56) for fastening the rotor body (51) to the plates (53, 54) in the direction of the axis (O). Each steel sheet (510) has an insertion hole (51a), communication holes (51b), and a fastening hole (555, 556). Each plate (53, 54) has an insertion hole (53a, 54a), communication holes (53b, 54b), and a fastening hole (535, 536, 545, 546). Each plate (53, 54) further has a cutout (53g, 54g) through which the insertion hole (53a, 54a) formed in the plate (53, 54) communicates with the communication holes (53b, 54b) formed in the plate (53, 54), and the cutout (53g, 54g) faces the rotor body (51). (Figure 6)

No. of Pages : 36 No. of Claims : 2

(12) PATENT APPLICATION PUBLICATION
(21) Application No.202044055704 A
(19) INDIA
(22) Date of filing of Application :22/12/2020
(43) Publication Date : 02/07/2021

(54) Title of the invention : TEXTILE MACHINE SYSTEM AND HOST COMPUTER

(51) International classification	:B65H0063000000, G07F0017340000, D01H0013140000, D01H0013320000, D03J0001000000
(31) Priority Document No	:2019-238325
(32) Priority Date	:27/12/2019
(33) Name of priority country	:Japan
(86) International Application No	:PCT//
Filing Date	:01/01/1900
(87) International Publication No	: NA
(61) Patent of Addition to Application Number	:NA
Filing Date	:NA
(62) Divisional to Application Number	:NA
Filing Date	:NA

(71)**Name of Applicant :**
1)KABUSHIKI KAISHA TOYOTA JIDOSHOKKI
Address of Applicant :2-1, Toyoda-cho, Kariya-shi, Aichi-Ken 448-8671, Japan Japan
(72)**Name of Inventor :**
1)YUYA FUJITA
2)HIROFUMI TODA
3)HIDEKI MATSUMURA

(57) Abstract :
A textile machine system (1) includes a plurality of textile machines (300) and a host computer (200) communicable to each other, the host computer (200) managing operating states of the textile machines (300). The host computer (200) includes a determination table set as determination criteria in determining one of the textile machines to be repaired, the determination table including a plurality of determination items, a plurality of conditions for each of the determination items, and a determination order according to which determination is made based on the determination items which are arbitrarily set through the host computer (200). The host computer (200) determines the one of the textile machines (300) to be repaired based on the determination table when two or more of the textile machines (300) stop. [Figure 1]

No. of Pages : 34 No. of Claims : 7

(12) PATENT APPLICATION PUBLICATION
(19) INDIA
(22) Date of filing of Application :23/12/2020
(21) Application No.202044055957 A
(43) Publication Date : 02/07/2021

(54) Title of the invention : SYSTEMS AND METHODS FOR MEASURING SPECTRAL ABSORPTION BY OBJECTS

(51) International classification	:G01N0021310000, G01N0021840000, A61B0001060000, G01N0021470000, G02B0007320000	(71)**Name of Applicant :** **1)DUKANE IAS, LLC** Address of Applicant :2900 Dukane Drive, St. Charles, Illinois 60174, USA U.S.A. (72)**Name of Inventor :** **1)Dax Hamilton**
(31) Priority Document No	:62/953,700	
(32) Priority Date	:26/12/2019	
(33) Name of priority country	:U.S.A.	
(86) International Application No	:PCT//	
Filing Date	:01/01/1900	
(87) International Publication No	: NA	
(61) Patent of Addition to Application Number	:NA	
Filing Date	:NA	
(62) Divisional to Application Number	:NA	
Filing Date	:NA	

(57) Abstract :
Identifying object characteristic based on a contrast ratio of an amount of light reflected or absorbed by the object. Part of the object is illuminated, where the object is a material that absorbs or reflects light emitted by the light source. An amount of light absorbed/reflected by the object is measured. A contrast ratio of the absorbed/reflected light is determined by comparing an amount of light absorbed/reflected by the object to a default absorption or reflection value to obtain a difference between the amount of light absorbed/reflected by the object and the default absorption/reflection value. A characteristic of the object is determined based on the contrast ratio. The wavelength of the light from the light source can be substantially the same as the wavelength of the energy used to form the object by a welding process that uses energy to join at least two parts together to form the object.

No. of Pages : 35 No. of Claims : 29

(12) PATENT APPLICATION PUBLICATION
(19) INDIA
(22) Date of filing of Application :23/12/2020

(21) Application No.202044056044 A
(43) Publication Date : 02/07/2021

(54) Title of the invention : POTASSIUM BORON-CONTAINING COMPOSITIONS AND THEIR PREPARATION

(51) International classification	:A61K0009000000, B23K0035360000, A61K0047260000, D04H0001640000, C10M0173020000
(31) Priority Document No	:62/954,127
(32) Priority Date	:27/12/2019
(33) Name of priority country	:U.S.A.
(86) International Application No	:PCT//
Filing Date	:01/01/1900
(87) International Publication No	: NA
(61) Patent of Addition to Application Number	:NA
Filing Date	:NA
(62) Divisional to Application Number	:NA
Filing Date	:NA

(71)**Name of Applicant :**
1)U.S. Borax Inc.
Address of Applicant :251 Little Falls Drive, Wilmington, Delaware 19808, USA U.S.A.
(72)**Name of Inventor :**
1)KOKEL, Julien
2)WAWRZOS, Frank A.
3)DE SEQUERIA, Cleiton

(57) Abstract :
The present disclose provides a process. In an embodiment, the process includes reacting boric acid with potassium carbonate in an aqueous solution. The process includes forming a stable aqueous suspension comprising particles of potassium pentaborate. The present disclosure also provides the composition formed the process. In an embodiment, the composition includes a stable aqueous suspension of particles of potassium pentaborate, the suspension composed of at least 8% (w/w) boron and at least 5% (w/w) potassium oxide (K2O).

No. of Pages : 22 No. of Claims : 15

(12) PATENT APPLICATION PUBLICATION
(21) Application No.202044056236 A
(19) INDIA
(22) Date of filing of Application :24/12/2020
(43) Publication Date : 02/07/2021

(54) Title of the invention : BALANCE-SPRING FOR HOROLOGICAL MOVEMENT AND METHOD FOR MANUFACTURING SAME

(51) International classification	:G04B0017060000, C22C0027020000, H01L0039240000, C22C0005020000, C22C0038120000	(71)**Name of Applicant :** **1)Nivarox-FAR S.A.** Address of Applicant :Avenue du Coll¨ge 10, CH-2400 Le Locle, Switzerland Switzerland
(31) Priority Document No	:19220163.0	(72)**Name of Inventor :** **1)CHARBON, Christian**
(32) Priority Date	:31/12/2019	
(33) Name of priority country	:EPO	
(86) International Application No	:PCT//	
Filing Date	:01/01/1900	
(87) International Publication No	: NA	
(61) Patent of Addition to Application Number	:NA	
Filing Date	:NA	
(62) Divisional to Application Number	:NA	
Filing Date	:NA	

(57) Abstract :
The present invention relates in particular to a balance-spring intended to equip a balance of an horological movement, comprising a core made of Nb-Ti made from an alloy consisting of: - niobium: balance to 100% by weight, - titanium: between 5 and 95% by weight, - traces of elements chosen from the group consisting of O, H, C, Fe, Ta, N, Ni, Si, Cu, Al, each of said elements being present in a quantity between 0 and 1600 ppm by weight, the total quantity formed by all of said elements being between 0% and 0.3% by weight, wherein the core made of Nb-Ti is coated with a layer of niobium, said layer of niobium having a thickness between 20 nm and 10 Î¼m.

No. of Pages : 21 No. of Claims : 22

(12) PATENT APPLICATION PUBLICATION
(19) INDIA
(22) Date of filing of Application :12/03/2020
(21) Application No.202047010718 A
(43) Publication Date : 02/07/2021

(54) Title of the invention : METHOD AND DEVICE FOR CONTROLLING TRAVEL OF DRIVE-ASSISTED VEHICLE

(51) International classification	:G05D0001020000, G08G0001160000, B60T0008175500, B60T0008170000, G08G0001000000
(31) Priority Document No	:NA
(32) Priority Date	:NA
(33) Name of priority country	:NA
(86) International Application No	:PCT/JP2017/030256
Filing Date	:24/08/2017
(87) International Publication No	:WO/2019/038872
(61) Patent of Addition to Application Number	:NA
Filing Date	:NA
(62) Divisional to Application Number	:NA
Filing Date	:NA

(71)**Name of Applicant :**
1)NISSAN MOTOR CO., LTD.
Address of Applicant :2, Takaracho, Kanagawa-ku, Yokohama-shi, Kanagawa 2210023, Japan. Japan
(72)**Name of Inventor :**
1)AKAMATSU, Yuta
2)KOBAYASHI, Masahiro
3)TAIRA, Yasuhisa
4)FUKATA, Osamu

(57) Abstract :

No. of Pages : 37 No. of Claims : 6

(12) PATENT APPLICATION PUBLICATION
(21) Application No.202047010719 A
(19) INDIA
(22) Date of filing of Application :12/03/2020
(43) Publication Date : 02/07/2021

(54) Title of the invention : POSITION CORRECTION METHOD AND POSITION ERROR CORRECTION DEVICE FOR DRIVE-ASSISTED VEHICLE

(51) International classification	:G01S0019400000, G01C0021300000, H03M0013000000, G01N0021210000, G06F0003041000
(31) Priority Document No	:NA
(32) Priority Date	:NA
(33) Name of priority country	:NA
(86) International Application No	:PCT/JP2017/031166
Filing Date	:30/08/2017
(87) International Publication No	:WO/2019/043831
(61) Patent of Addition to Application Number	:NA
Filing Date	:NA
(62) Divisional to Application Number	:NA
Filing Date	:NA

(71)**Name of Applicant :**
1)NISSAN MOTOR CO.,LTD.
Address of Applicant :2, TAKARACHO, KANAGAWA-KU, YOKOHAMA-SHI, KANAGAWA 2210023 Japan
(72)**Name of Inventor :**
1)FUKUSHIGE, Takashi
2)TANGE, Satoshi

(57) Abstract :
The selection of whether to prioritize smoothness or to prioritize non-departure, depending on the scenario, is made possible, and vehicle behavior where it is possible to feel more at ease is achieved. In a device for correcting a position error of an autonomous vehicle provided with a navigation control unit (3) that corrects error during autonomous travel, the 10 navigation control unit (3) includes, in a target route corrector 36 that corrects a target route, a road boundary information consolidation unit (361), a lateral correction amount calculation unit (362), and a lateral/sideways movement unit (363). The road boundary information consolidation unit (361) detects a lane boundary of a lane in which the host vehicle travels. The lateral correction amount calculation unit (362) compares positional 15 relationships between a lane boundary that was detected and a target route on a map, and in situations where the target route is within a prescribed distance of the lane boundary, or in situations where the target route is on the opposite side of the lane boundary to the host vehicle, calculates a lateral correction amount for the target route. The lateral/sideways movement unit (363), upon the calculation of the lateral correction amount, moves the target 20 route sideways in a lateral direction by the lateral correction amount to correct the target route.

No. of Pages : 37 No. of Claims : 13

(12) PATENT APPLICATION PUBLICATION
(19) INDIA
(22) Date of filing of Application :10/12/2020
(21) Application No.202047053772 A
(43) Publication Date : 02/07/2021

(54) Title of the invention : IMAGE PROCESSING METHOD AND APPARATUS, IMAGE DEVICE AND STORAGE MEDIUM

(51) International classification	:G06T0003000000, G06K0009000000, A61B0034100000, G06T0007120000, G06K0009460000
(31) Priority Document No	:201910191918.1
(32) Priority Date	:14/03/2019
(33) Name of priority country	:China
(86) International Application No	:PCT/CN2019/130970
Filing Date	:31/12/2019
(87) International Publication No	:WO 2020/181900
(61) Patent of Addition to Application Number	:NA
Filing Date	:NA
(62) Divisional to Application Number	:NA
Filing Date	:NA

(71)**Name of Applicant :**
1)BEIJING SENSETIME TECHNOLOGY DEVELOPMENT CO., LTD.
Address of Applicant :Room 1101-1117, 11th Floor, No.58 Northwest 4th Ring Road, Haidian Beijing 100080 China
(72)**Name of Inventor :**
1)LI, Tong
2)LIU, Wentao
3)QIAN, Chen

(57) Abstract :
Disclosed are an image processing method and apparatus, a device and a storage medium. The image processing method comprises: acquiring a key point of a reference area of an object in an image (S210); determining the orientation of the reference area according to the key point of the reference area (S220); and carrying out deformation processing on an area to be adjusted of the object based on the orientation of the reference area (S230). The area to be adjusted is the same as or different from the reference area.

No. of Pages : 25 No. of Claims : 12

(12) PATENT APPLICATION PUBLICATION
(21) Application No.202142027549 A
(19) INDIA
(22) Date of filing of Application :19/06/2021
(43) Publication Date : 02/07/2021

(54) Title of the invention : METHOD FOR MANAGEMENT OF SMART GRINDING DEVICE

(51) International classification	:G08B0013196000, B24B0041060000, G05B0019042000, H04L0012260000, G07C0005080000
(31) Priority Document No	:NA
(32) Priority Date	:NA
(33) Name of priority country	:NA
(86) International Application No	:NA
Filing Date	:NA
(87) International Publication No	: NA
(61) Patent of Addition to Application Number	:NA
Filing Date	:NA
(62) Divisional to Application Number	:201841000043
Filed on	:01/01/2018

(71)**Name of Applicant :**
1)Generation Infinite Machines Pvt Ltd
Address of Applicant :B2, 2nd Floor, B-Block, Mahalakshmi Apartments (Opp. to Raj Theatre), Abdul Razzak Street, Anna Nagar, West Saidapet, Tamil Nadu-6000015, India Tamil Nadu India
(72)**Name of Inventor :**
1)Muthukumaran Subbiah

(57) Abstract :
ABSTRACT METHOD FOR MANAGEMENT OF SMART GRINDING DEVICE A method (200) for management of smart grinding device (102), the method (200) comprising communicating the one or more inputs to a smart grinding device (102), for performing a plurality of functions for producing a grinded mixture of ingredients for preparation of an edible composition, wherein the inputs may be from the user or a remote server or from the AI based on data collected from the sensors, implementing the operation of the plurality of functions, by the smart grinding device (102), communicating an information including data collected from the sensors related to the plurality of functions performed, to a remote server (108) via a wireless network (106); and analysing the information by the remote server (108), related to the plurality of functions performed by the smart grinding device (102) by using artificial intelligence (AI) for generating the one or more inputs for the plurality of functions and for making alteration in the quantity of the ingredients or any process which may influence the preparation of the grinded mixture to maintain the taste and quality of the grinded mixture. [FIGURE 2]

No. of Pages : 45 No. of Claims : 4

(12) PATENT APPLICATION PUBLICATION
(19) INDIA
(22) Date of filing of Application :21/06/2021

(21) Application No.202145027705 A
(43) Publication Date : 02/07/2021

(54) Title of the invention : Solar Cell and Method of Manufacturing the Same

(51) International classification	:H01L0031180000, H01L0031022400, H01L0031068000, H01L0031023600, H01L0031074700
(31) Priority Document No	:2012-027297
(32) Priority Date	:10/02/2012
(33) Name of priority country	:Japan
(86) International Application No	:PCT//
Filing Date	:01/01/1900
(87) International Publication No	: NA
(61) Patent of Addition to Application Number	:NA
Filing Date	:NA
(62) Divisional to Application Number	:505/CHE/2013
Filed on	:05/02/2013

(71)**Name of Applicant :**
1)Shin-Etsu Chemical Co., Ltd.
Address of Applicant :6-1, Ohtemachi 2-chome, Chiyoda-ku, Tokyo, Japan Japan
(72)**Name of Inventor :**
1)Takenori WATABE
2)Hiroyuki OTSUKA

(57) Abstract :
As attached

No. of Pages : 30 No. of Claims : 8

(12) PATENT APPLICATION PUBLICATION
(19) INDIA
(22) Date of filing of Application :18/01/2021

(21) Application No.202147002186 A
(43) Publication Date : 02/07/2021

(54) Title of the invention : NEEDLE DRIVERS FOR SUTURING INSTRUMENTS AND METHODS OF MANUFACTURE

(51) International classification	:A61B0017062000, A61B0017040000, A61B0017170000, A61B0017115000, C22F0001100000
(31) Priority Document No	:62/687,752
(32) Priority Date	:20/06/2018
(33) Name of priority country	:U.S.A.
(86) International Application No	:PCT/US2019/038308
Filing Date	:20/06/2019
(87) International Publication No	: NA
(61) Patent of Addition to Application Number	:NA
Filing Date	:NA
(62) Divisional to Application Number	:NA
Filing Date	:NA

(71)**Name of Applicant :**
1)DYNAMIC SUTURE, INC.
Address of Applicant :c/o Bailey & Glasser, 176 Federal Street, FL5, Boston, Massachusetts 02110, USA. U.S.A.
(72)**Name of Inventor :**
1)ALMODOVAR, Luis Jose

(57) Abstract :
A needle driver can include a first jaw hosting a first shaft and a second jaw hosting a second shaft. The first shaft hosts a first roller and a first set of teeth. The second shaft hosts a second roller and a second set of teeth. The second jaw moves relative to the first jaw between an open position and a closed position. The first set of teeth meshes with the second set of teeth when the second jaw is in the closed position such that (a) the first set of teeth can drive the second set of teeth and (b) the first roller and the second roller can drive a needle therebetween when the first set of teeth drives the second set of teeth.

No. of Pages : 85 No. of Claims : 18

(12) PATENT APPLICATION PUBLICATION
(19) INDIA
(22) Date of filing of Application :11/02/2021

(21) Application No.202147005801 A
(43) Publication Date : 02/07/2021

(54) Title of the invention : IMAGING MODALITY MAINTENANCE CARE PACKAGE SYSTEMS AND METHODS

(51) International classification	:G06F0008650000, G06Q0010000000, G16H0040400000, G06F0003120000, G16H0020400000
(31) Priority Document No	:16/232437
(32) Priority Date	:26/12/2018
(33) Name of priority country	:U.S.A.
(86) International Application No	:PCT/US2019/068517
Filing Date	:26/12/2019
(87) International Publication No	:WO 2020/139907
(61) Patent of Addition to Application Number	:NA
Filing Date	:NA
(62) Divisional to Application Number	:NA
Filing Date	:NA

(71)**Name of Applicant :**
1)GENERAL ELECTRIC COMPANY
Address of Applicant :One River Road Schenectady, New York 12345 U.S.A.
(72)**Name of Inventor :**
1)NUTHI, Sridhar
2)ALLEN, Nicholas
3)BABULA, Deborah

(57) Abstract :
Methods, apparatus, systems and articles of manufacture to provide an image modality maintenance care package are disclosed. An example apparatus includes a solution predictor to predict a solution for servicing an imaging device based on the at least one of an error code or an identified issue and information related to previous solutions corresponding to the at least one of the error code or the identified issue. The apparatus further includes a care package generator to generate a customized data structure corresponding to the solution, the customized data structure including automated solutions to service the imaging device. The apparatus further includes an interface to transmit, using a wireless communication, the customized data structure to at least one of the imaging device or a repair device connected to the imaging device and in response to the execution of the automated solutions by the imaging device, obtaining a response corresponding to the servicing of the imaging device using the repair device. The apparatus further includes an information updater to update at least one of the accessed information, the predicted solution, the relevant information, or a digital twin of the imaging device to update subsequent customized care package generation based on the response.

No. of Pages : 61 No. of Claims : 20

(12) PATENT APPLICATION PUBLICATION
(19) INDIA
(22) Date of filing of Application :02/03/2021

(21) Application No.202147008758 A
(43) Publication Date : 02/07/2021

(54) Title of the invention : DEVICE FOR EXERCISING THE BODY IN A CONTINUAL AND CONTROLLED MANNER

(51) International classification	:A63B0023020000, A63B0021000000, A63B0023000000, B60L0050160000, A63B0021002000
(31) Priority Document No	:0504-2019
(32) Priority Date	:25/02/2019
(33) Name of priority country	:Chile
(86) International Application No	:PCT/CL2019/050162
Filing Date	:30/12/2019
(87) International Publication No	:WO 2020/172758
(61) Patent of Addition to Application Number	:NA
Filing Date	:NA
(62) Divisional to Application Number	:NA
Filing Date	:NA

(71)**Name of Applicant :**
1)ARNADO NEGRETE, Hugo
Address of Applicant :Ongolmo 531 Dpto 306 5641 Concepci³n Chile
(72)**Name of Inventor :**
1)ARNADO NEGRETE, Hugo

(57) Abstract :
The present utility model relates to a device for the assisted exercise of the abdominal muscles. The equipment comprises a base structure, a seat for a person, a back for the torso, a fastening device for the arms, an adaptable headrest cushion and a foot rest. This configuration ensures that the physical force is exerted by the abdominal muscles and the arms. The device comprises a central rotation shaft connected to a variable-power electric motor connected to a reducer.

No. of Pages : 5 No. of Claims : 9

(12) PATENT APPLICATION PUBLICATION
(21) Application No.202147025493 A
(19) INDIA
(22) Date of filing of Application :08/06/2021
(43) Publication Date : 02/07/2021

(54) Title of the invention : MULTI-SENSOR DATA FUSION METHOD AND DEVICE

(51) International classification	:G06F0016951000, G06K0009620000, G06F0017160000, G06T0007000000, G06F0008410000
(31) Priority Document No	:201811641186.3
(32) Priority Date	:29/12/2018
(33) Name of priority country	:China
(86) International Application No	:PCT/CN2019/129629
Filing Date	:28/12/2019
(87) International Publication No	:WO 2020/135810
(61) Patent of Addition to Application Number	:NA
Filing Date	:NA
(62) Divisional to Application Number	:NA
Filing Date	:NA

(71)**Name of Applicant :**
1)HUAWEI TECHNOLOGIES CO., LTD.
Address of Applicant :Huawei Administration Building Bantian, Longgang District Shenzhen, Guangdong 518129 China
(72)**Name of Inventor :**
1)PENG, Xueming
2)WEI, Zhixuan
3)CHEN, Qi

(57) Abstract :
Disclosed are a multi-sensor data fusion sensing method and device. The method comprises the following steps: preprocessing the received feature data collected by multiple sensors to obtain static feature data and dynamic feature data; constructing a current static environmental message on the basis of the static feature data and a referential dynamic target message; and constructing a current dynamic target message on the basis of the dynamic feature data and a referential static environmental message. That is, dynamic targets and the static environment are constructed on the basis of mutual reference to the construction results of each other. The construction process not only uses the feature data at a lower level, but also uses the construction results at a higher level such as the referential dynamic target message or the referential static environmental message, thereby improving the sensing properties of multi-sensor data fusion, and further improving the sensing capacities of a mobile carrier on dynamic targets in the surrounding environment and on the static environment.

No. of Pages : 48 No. of Claims : 20

(12) PATENT APPLICATION PUBLICATION
(19) INDIA
(22) Date of filing of Application :09/06/2021

(21) Application No.202147025573 A
(43) Publication Date : 02/07/2021

(54) Title of the invention : AUDIBLE AUTHENTICATION

(51) International classification	:G06Q0020400000, H04L0009320000, G06Q0020380000, G06F0003160000, H04L0029060000
(31) Priority Document No	:16/203186
(32) Priority Date	:28/11/2018
(33) Name of priority country	:U.S.A.
(86) International Application No	:PCT/US2019/063391
Filing Date	:26/11/2019
(87) International Publication No	:WO 2020/112865
(61) Patent of Addition to Application Number	:NA
Filing Date	:NA
(62) Divisional to Application Number	:NA
Filing Date	:NA

(71)**Name of Applicant :**
1)VISA INTERNATIONAL SERVICE ASSOCIATION
Address of Applicant :P.O. Box 8999 San Francisco, California 94128 U.S.A.
(72)**Name of Inventor :**
1)MANCHIREDDY, Archana Reddy
2)AMAR, Sumit
3)FLANAGAN, Patrick Ryan
4)BHAGAVATHULA, Srinivas
5)MORGAN, Miranda
6)LAZER, Meryl

(57) Abstract :
A method is disclosed. A digital assistant device receives a biometric sample from a user and then converts the biometric sample to a biometric template. The digital assistant device can scan for user devices in communication range of the digital assistant device, thereby receiving user device identifiers. The digital assistant device can transmit, to a server computer, an authentication request comprising the biometric template and at least one user device identifier. The digital assistant device can then receive a cryptogram request message comprising the at least one user device identifier, from the server computer. The digital assistant device can transmit, to a user device corresponding to the at least one user device identifier, the cryptogram request message and can then receive a cryptogram. The digital assistant device can then transmit the cryptogram to the server computer. The server computer verifies the cryptogram before further processing of a transaction.

No. of Pages : 42 No. of Claims : 16

(12) PATENT APPLICATION PUBLICATION
(19) INDIA
(22) Date of filing of Application :09/06/2021
(21) Application No.202147025585 A
(43) Publication Date : 02/07/2021

(54) Title of the invention : CUTTING, GRINDING AND POLISHING DISK, AND METHOD FOR MACHINING WORKPIECES

(51) International classification	:G01N0001280000, C23C0004020000, B23D0043060000, B24B0055050000, B23Q0001360000
(31) Priority Document No	:10 2018 008 920.8
(32) Priority Date	:13/11/2018
(33) Name of priority country	:Germany
(86) International Application No	:PCT/DE2019/000296
Filing Date	:13/11/2019
(87) International Publication No	:WO 2020/098852
(61) Patent of Addition to Application Number	:NA
Filing Date	:NA
(62) Divisional to Application Number	:NA
Filing Date	:NA

(71)**Name of Applicant :**
1)HOCHSCHULE TRIER - TRIER UNIVERSITY OF APPLIED SCIENCES
Address of Applicant :Schneidershof 54293 Trier Germany
(72)**Name of Inventor :**
1)WITTMANN, Armin
2)FERRING, Jonas
3)EHLENZ, Tobias
4)ROBERT, Dietmar

(57) Abstract :
The invention relates to a disk-shaped cutting tool (1), to a radial cutting method for machining axially elongate workpieces, to a cutting device and to a use of a disk-shaped cutting tool. A disk-shaped cutting tool according to the invention has defined flexibility and a defined impact. In a radial cutting method according to the invention, lateral deflection of the axially stationarily rotating tool (1) brings the tool, by means of the at least one laterally applied grinding and polishing surface (6, 20, 21, 22), into axial effective contact with the workpiece to be machined. In a cutting device according to the invention, the cutting tool (1) can be moved only radially in order to machine the workpiece. A use, according to the invention, of a disk-shaped tool (1) serves the purpose of specimen preparation and subsequent surface analysis on a workpiece cut to length.

No. of Pages : 18 No. of Claims : 19

(12) PATENT APPLICATION PUBLICATION
(19) INDIA
(22) Date of filing of Application :11/06/2021

(21) Application No.202147026024 A
(43) Publication Date : 02/07/2021

(54) Title of the invention : MULTIPLE ACTIVE-COORDINATION-SET AGGREGATION FOR MOBILITY MANAGEMENT

(51) International classification	:H04W0084120000, H04W0016320000, H04W0024100000, H04B0007024000, H04W0076120000
(31) Priority Document No	:62/787710
(32) Priority Date	:02/01/2019
(33) Name of priority country	:U.S.A.
(86) International Application No	:PCT/US2019/069129
Filing Date	:31/12/2019
(87) International Publication No	:WO 2020/142532
(61) Patent of Addition to Application Number	:NA
Filing Date	:NA
(62) Divisional to Application Number	:NA
Filing Date	:NA

(71)**Name of Applicant :**
1)GOOGLE LLC
Address of Applicant :1600 Amphitheatre Parkway Mountain View, California 94043 U.S.A.
(72)**Name of Inventor :**
1)WANG, Jibing
2)STAUFFER, Erik Richard

(57) Abstract :
This document describes aspects of multiple active-coordination-set (ACS) aggregation for mobility management. A master base station (121) coordinates aggregation of control-plane and user-plane communications, generated by a first active-coordination-set for a first joint communication between the first ACS (702) and a user equipment (110), where the first ACS includes the master base station and at least a second base station (122, 123). The master base station receives, from a second master base station (124) of a second ACS (704), control-plane information or user-plane data associated with a second joint communication between the second ACS and the UE, the second ACS including the second master base station (124) and at least a third base station. The master base station aggregates the control-plane and user-plane communications with at least a portion of the control-plane information or the user-plane data to coordinate data throughput to the user equipment.

No. of Pages : 39 No. of Claims : 15

(12) PATENT APPLICATION PUBLICATION
(19) INDIA
(22) Date of filing of Application :14/06/2021

(21) Application No.202147026324 A
(43) Publication Date : 02/07/2021

(54) Title of the invention : WHEEL END APPARATUS WITH ELECTRIC GENERATOR

(51) International classification	:B60B0027000000, B60B0027040000, B62M0009122000, H02K0007180000, E05B0037000000
(31) Priority Document No	:62/770544
(32) Priority Date	:21/11/2018
(33) Name of priority country	:U.S.A.
(86) International Application No	:PCT/US2019/062586
Filing Date	:21/11/2019
(87) International Publication No	:WO 2020/106942
(61) Patent of Addition to Application Number	:NA
Filing Date	:NA
(62) Divisional to Application Number	:NA
Filing Date	:NA

(71)**Name of Applicant :**
1)CONSOLIDATED METCO, INC.
Address of Applicant :5701 SE Columbia Way Vancouver, Washington 98661 U.S.A.
(72)**Name of Inventor :**
1)SEIBERT, Cody
2)BOVE, Brian
3)EDWARDS, William Joseph
4)MORTENSEN, Benjamin David

(57) Abstract :
In accordance with one aspect of the present disclosure, a wheel end apparatus for a vehicle is provided that includes a wheel hub assembly configured to be mounted to a spindle and a wheel hub of the wheel hub assembly. The wheel end apparatus includes a coil of wire and at least one magnet of the wheel hub assembly configured to move relative to one another with rotation of the wheel hub around the spindle. The wheel end apparatus includes a wheel end device operably coupled to the coil of wire to receive electrical power generated by relative movement of the coil of wire and the at least one magnet. Further, the wheel end apparatus includes communication circuitry operably coupled to the wheel end device and configured to wirelessly communicate wheel end device information with a wheel end monitoring device.

No. of Pages : 17 No. of Claims : 26

(12) PATENT APPLICATION PUBLICATION
(19) INDIA
(22) Date of filing of Application :14/06/2021
(21) Application No.202147026353 A
(43) Publication Date : 02/07/2021

(54) Title of the invention : THREE-DIMENSIONAL DATA ENCODING METHOD, THREE-DIMENSIONAL DATA DECODING METHOD, THREE-DIMENSIONAL DATA ENCODING DEVICE, AND THREE-DIMENSIONAL DATA DECODING DEVICE

(51) International classification	:H04W0072040000, H04N0005850000, H04L0012640000, G11B0027320000, G06K0009000000
(31) Priority Document No	:62/784998
(32) Priority Date	:26/12/2018
(33) Name of priority country	:U.S.A.
(86) International Application No	:PCT/JP2019/051277
Filing Date	:26/12/2019
(87) International Publication No	:WO 2020/138353
(61) Patent of Addition to Application Number	:NA
Filing Date	:NA
(62) Divisional to Application Number	:NA
Filing Date	:NA

(71)**Name of Applicant :**
1)PANASONIC INTELLECTUAL PROPERTY CORPORATION OF AMERICA
Address of Applicant :20000 Mariner Avenue, Suite 200, Torrance, California 90503 U.S.A.
(72)**Name of Inventor :**
1)IGUCHI, Noritaka

(57) Abstract :
In this three-dimensional data encoding method: a plurality of attribute information pieces of a corresponding plurality of three-dimensional points (S6701) are encoded using a parameter; and a bit stream including the plurality of encoded attribute information pieces, control information, and a plurality of first attribute control information pieces is generated (S6702). The control information corresponds to the plurality of attribute information pieces, and contains a plurality of type information pieces, each indicating a type of attribute information which differs from the others. Each of the plurality of first attribute control information pieces corresponds to the plurality of attribute information pieces, and each of the plurality of first attribute control information pieces contains first identification information indicating an association with one of the plurality of type information pieces.

No. of Pages : 224 No. of Claims : 16

CONTINUED TO PART- 2