पेटेंट कार्यालय
शासकीय जर्नल

OFFICIAL JOURNAL
OF
THE PATENT OFFICE

निर्गमन सं. 29/2021	शुक्रवार	दिनांक: 16/07/2021
ISSUE NO. 29/2021	FRIDAY	DATE: 16/07/2021

पेटेंट कार्यालय का एक प्रकाशन
PUBLICATION OF THE PATENT OFFICE

INTRODUCTION

In view of the recent amendment made in the Patents Act, 1970 by the Patents (Amendment) Act, 2005 effective from 01st January 2005, the Official Journal of The Patent Office is required to be published under the Statute. This Journal is being published on weekly basis on every Friday covering the various proceedings on Patents as required according to the provision of Section 145 of the Patents Act 1970. All the enquiries on this Official Journal and other information as required by the public should be addressed to the Controller General of Patents, Designs & Trade Marks. Suggestions and comments are requested from all quarters so that the content can be enriched.

(Shri Rajendra Ratnoo)
CONTROLLER GENERAL OF PATENTS, DESIGNS & TRADE MARKS

16nd JULY, 2021

CONTENTS

THE PATENT OFFICE
KOLKATA, 16/07/2021
Address of the Patent Offices/Jurisdictions
The following are addresses of all the Patent Offices located at different places having their Territorial Jurisdiction on a Zonal basis as shown below:-

1	Office of the Controller General of Patents, Designs & Trade Marks, Boudhik Sampada Bhavan, Near Antop Hill Post Office,S.M.Road,Antop Hill, Mumbai – 400 037 Phone: (91)(22) 24123311, Fax : (91)(22) 24123322 E-mail: cgpdtm@nic.in	4	The Patent Office, Government of India, Intellectual Property Rights Building, G.S.T. Road, Guindy, Chennai – 600 032. Phone: (91)(44) 2250 2081-84 Fax : (91)(44) 2250 2066 E-mail: chennai-patent@nic.in ❖ The States of Andhra Pradesh, Telangana, Karnataka, Kerala, Tamil Nadu and the Union Territories of Puducherry and Lakshadweep.
2	The Patent Office, Government of India, Boudhik Sampada Bhavan, Near Antop Hill Post Office,S.M.Road,Antop Hill, Mumbai – 400 037 Phone: (91)(22) 24137701 Fax: (91)(22) 24130387 E-mail: mumbai-patent@nic.in ❖ The States of Gujarat, Maharashtra, Madhya Pradesh, Goa and Chhattisgarh and the Union Territories of Daman and Diu & Dadra and Nagar Haveli	5	The Patent Office (Head Office), Government of India, Boudhik Sampada Bhavan, CP-2, Sector –V, Salt Lake City, Kolkata- 700 091 Phone: (91)(33) 2367 1943/44/45/46/87 Fax: (91)(33) 2367 1988 E-Mail: kolkata-patent@nic.in ❖ Rest of India
3	The Patent Office, Government of India, Boudhik Sampada Bhavan, Plot No. 32., Sector-14, Dwarka, New Delhi – 110075 Phone: (91)(11) 25300200 & 28032253 Fax: (91)(11) 28034301 & 28034302 E.mail: delhi-patent@nic.in ❖ The States of Haryana, Himachal Pradesh, Jammu and Kashmir, Punjab, Rajasthan, Uttar Pradesh, Uttaranchal, Delhi and the Union Territory of Chandigarh.		

Website: www.ipindia.nic.in
www.patentoffice.nic.in

All applications, notices, statements or other documents or any fees required by the Patents Act, 1970 and The Patents (Amendment) Act, 2005 or by the Patents (Amendment) Rules, 2006 will be received only at the appropriate offices of the Patent Office.

Fees: The Fees may either be paid in cash or may be sent by Bank Draft or Cheques payable to the Controller of Patents drawn on a scheduled Bank at the place where the appropriate office is situated.

पेटेंट कार्यालय

कोलकाता, दिनांक 16/07/2021

• कार्यालयों के क्षेत्राधिकार के पते

विभिन्न जगहों पर स्थित पेटेंट कार्यालय के पते आंचलिक आधार पर दर्शित उनके प्रादेशिक अधिकार क्षेत्र के साथ नीचे दिए गए है:-

1	कार्यालय : महानियंत्रक, एकस्व, अभिकल्प तथा व्यापार चिहन, एंटोप हिल डाकघर के समीप, एस. एम. रोड, एंटोप हिल, मुम्बई- 400 037, भारत, फोन: (91) (22) 24123311 फ़ैक्स: (91) (22) 24123322 ई. मेल: cgpdtm@nic.in	4	पेटेंट कार्यालय, भारत सरकार इंटेलेक्चुअल प्रॉपर्टी राइट्स बिल्डिंग, इंडस्ट्रियल इस्टेट एसआईडीसीओ आरएमडी गोडाउन एरिया एडजसेन्ट टु ईगल फ्लास्क, जी. एस. टी. रोड, गायन्डी चेन्नई - 600 032. फोन: (91)(44) 2250 2081-84 फ़ैक्स: (91)(44) 2250-2066 ई. मेल: chennai-patent@nic.in ❖ आन्ध्र प्रदेश, तेलंगाना, कर्नाटक, केरल, तमिलनाडु तथा पुडुचेरी राज्य क्षेत्र एवं संघ शासित क्षेत्र, लक्षदीप
2	पेटेंट कार्यालय, भारत सरकार बौद्धिक संपदा भवन, एंटोप हिल डाकघर के समीप, एस. एम. रोड, एंटोप हिल, मुम्बई- 400 037, फोन: (91) (22) 24137701 फ़ैक्स: (91) (22) 24130387 ई. मेल: Mumbai-patent@nic.in ❖ गुजरात, महाराष्ट्र, मध्य प्रदेश, गोवा तथा छत्तीसगढ़ राज्य क्षेत्र एवं संघ शासित क्षेत्र, दमन तथा दीव, दादर और नगर हवेली.	5	पेटेंट कार्यालय, भारत सरकार कोलकाता, (प्रधान कार्यालय) बौद्धिक संपदा भवन, सीपी-2, सेक्टर- V, साल्ट लेक सिटी, कोलकाता-700 091, भारत. फोन: (91)(33) 2367 1943/44/45/46/87 फ़ैक्स:/Fax: (91)(33) 2367 1988 ई. मेल: kolkata-patent@nic.in ❖ भारत का अवशेष क्षेत्र
3	पेटेंट कार्यालय, भारत सरकार बौद्धिक संपदा भवन, प्लॉट सं. 32, सेक्टर- 14, द्वारका, नई दिल्ली- 110 075. फोन: (91)(11) 25300200, 28032253 फ़ैक्स: (91)(11) 28034301, 28034302 ई. मेल: delhi-patent@nic.in हरियाणा, हिमाचल प्रदेश, जम्मू तथा कश्मीर, पंजाब,राजस्थान, उत्तर प्रदेश, दिल्ली तथा उत्तरांचल राज्य क्षेत्रों, एवं संघ शासित क्षेत्र चंडीगढ़		

वेबसाइट: http://www.ipindia.nic.in
www.patentoffice.nic.in

पेटेंट अधिनियम, 1970 तथा पेटेंट (संशोधन) अधिनियम, 2005 अथवा पेटेंट (संशोधन) नियम, 2006 द्वारा वांछित सभी आवेदन, सूचनाए, विवरण या अन्य दस्तावेज़ या कोई शुल्क पेटेंट कार्यालय के केवल उपयुक्त कार्यालय में स्वीकृत होंगे।

शुल्क: शुल्क या तो नगद रूप में या Controller of Patents के नाम में देय बैंक ड्राफ्ट या चेक के द्वारा भेजी जा सकती है जो उसी स्थान के किसी अनुसूचित बैंक में प्रदत्त हो जहाँ उपयुक्त कार्यालय स्थित है ।

SPECIAL NOTICE

18 Months publication as required under Section 11A of the Patents Act, 1970 as amended by the Patents (Amendment) Act, 2005.

Notice is hereby given that any person at any time before the grant of Patent may give representation by way of opposition to the Controller of Patents at appropriate office on the ground and in a manner specified under section 25(1) of the Patents (Amendment) Act, 2005 read with Rule 55 of the Patents (Amendment) Rules, 2006.

Notice is also given that if any interested person requests for copies of the complete specification, drawing and abstract of any application already published, the photocopy of the same can be supplied by the Patent Office as per the jurisdiction on payment of prescribed fees of Rs.8/- per page. If any further details are required to be obtained, the same can be provided by the respective Patent Offices on request.

(Shri Rajendra Ratnoo)
CONTROLLER GENERAL OF PATENTS, DESIGNS & TRADE MARKS

SPECIAL NOTICE

Under the new provision of the Patents Act, 1970 as amended by the Patents (Amendment) Act, 2005 and Rules there under, Publication of the matter relating to Patents in the Official Gazette of India Part III, Section 2 has been discontinued and instead The Official Journal of the Patent Office is being published containing all the activities of The Patent Office such as publication of all the patent applications after 18th months , grant of patents & all other information in respect of the proceedings as required under the provisions of the Patents (Amendment) Act, 2005 and Rules thereunder on weekly basis on every **Friday**.

The Journal is uploaded in the website every Friday. So Paper form and CD-ROM form of the Journal are discontinued from 01/01/2009.

SPECIAL NOTICE

Every effort is being taken to publish all the patent applications under section 11(A) of the Patents Act. However, if duplication of publication of any application is found, then earlier date of publication will be taken for the purpose of provisional protection for applicant and Patent Office will grant Patent not before six months from the date of second publication, provided that there is there is no third party representation.

Early Publication:

The following patent applications have been published under section 11A (2) of The Patents (Amendment) Act 2005 and rule 24A of The Patents (Amendment) Rules, 2006. Any person may file representation by way of opposition to the Controller of Patents at the appropriate office against the grant of the patent in the prescribed manner under section 25(1) of the Patents (Amendment) Act 2005 read with the rule 55 of The Patents (Amendment) Rules, 2006:

(12) PATENT APPLICATION PUBLICATION

(21) Application No.202011025234 A

(19) INDIA

(22) Date of filing of Application :16/06/2020

(43) Publication Date : 16/07/2021

(54) Title of the invention : HIGH RECOVERY WATER PURIFIER

(51) International classification	:C02F0001440000, B01D0061020000, C02F0001520000, C02F0001000000, B01D0061580000	(71)**Name of Applicant :** **1)SOMANY HOME INNOVATION LIMITED** Address of Applicant :68, Echelon Inst. Area, Sector 32, Gurugram, Haryana 122001, India Haryana India
(31) Priority Document No	:NA	(72)**Name of Inventor :** **1)Pradeep Thakur** **2)Nikhil Maheshwari**
(32) Priority Date	:NA	
(33) Name of priority country	:NA	
(86) International Application No	:NA	
Filing Date	:NA	
(87) International Publication No	: NA	
(61) Patent of Addition to Application Number	:NA	
Filing Date	:NA	
(62) Divisional to Application Number	:NA	
Filing Date	:NA	

(57) Abstract :

The present invention relates to a system and method for high recovery of purified water and reducing the concentration of waste water during water purification in the reverse osmosis process. The system and method involves two stages of water purification i.e. two RO modules connected in series in which waste water from first RO module enters into salvage module (second RO module) for further purification and re-treatment process. As a result, 70 to 75 % pure water is obtained and only 20 to 25 % water is discarded as waste water. The whole process is achieved through Single pressure generating equipment in which enough pressure is produced to operate both RO modules in a same time.

No. of Pages : 10 No. of Claims : 6

(12) PATENT APPLICATION PUBLICATION
(21) Application No.202011025978 A
(19) INDIA
(22) Date of filing of Application :19/06/2020
(43) Publication Date : 16/07/2021

(54) Title of the invention : ARTIFICIAL INTELLIGENCE-BASED SYSTEM AND METHOD FOR DYNAMICALLY PREDICTING AND SUGGESTING EMOJIS ON A QUICK ACCESS EMOJI INTERFACE

(51) International classification	:G06F0017270000, G06F0009451000, G06F0003048100, G06N0020000000, G06F0016958000
(31) Priority Document No	:NA
(32) Priority Date	:NA
(33) Name of priority country	:NA
(86) International Application No	:NA
Filing Date	:NA
(87) International Publication No	: NA
(61) Patent of Addition to Application Number	:NA
Filing Date	:NA
(62) Divisional to Application Number	:NA
Filing Date	:NA

(71)**Name of Applicant :**
1)TALENT UNLIMITED ONLINE SERVICES PVT. LTD.
Address of Applicant :202, S/F 94 Meghdoot Nehru Place, South Delhi 110019 Delhi India
(72)**Name of Inventor :**
1)RAHUL PRASAD
2)ANKIT PRASAD
3)KAUSHIK PARASHAR

(57) Abstract :
A system (1500) including an artificial intelligence (AI) engine (1509) and an AI-based method are provided for dynamically predicting and suggesting emojis on a quick access emoji interface. The AI engine (1509) detects an input message in an input field on a graphical user interface of a user application (1510). The AI engine (1509) processes the input message to identify elements, for example, character elements, image elements, patterns, etc., of the input message. The AI engine (1509) analyzes and determines a context and factors, for example, emoji positions, one or more languages, intent, user and global preferences, etc., associated with the input message for each element of the input message. The AI engine (1509) dynamically generates predictions of emojis based on the context and one or more factors in real time. The AI engine (1509) renders one or more grouped sets of emojis on the emoji interface based on the dynamically generated predictions.

No. of Pages : 56 No. of Claims : 18

(12) PATENT APPLICATION PUBLICATION
(21) Application No.202011027079 A
(19) INDIA
(22) Date of filing of Application :25/06/2020
(43) Publication Date : 16/07/2021

(54) Title of the invention : WATER PURIFIER WITH RESERVOIR BASED RO FLUSHING

(51) International classification	:C02F0001000000, C08G0018790000, C02F0001440000, C09D0175120000, F01N0003300000
(31) Priority Document No	:NA
(32) Priority Date	:NA
(33) Name of priority country	:NA
(86) International Application No	:NA
Filing Date	:NA
(87) International Publication No	: NA
(61) Patent of Addition to Application Number	:NA
Filing Date	:NA
(62) Divisional to Application Number	:NA
Filing Date	:NA

(71)**Name of Applicant :**
1)Somany Home Innovation Ltd
Address of Applicant :68, Echelon Inst. Area, Sector 32, Gurugram, Haryana 122001, India Haryana India
(72)**Name of Inventor :**
1)Pradeep Thakur
2)Nikhil Maheshwari

(57) Abstract :
The present invention relates to a RO water purifier capable of preventing early choking 5 of RO membrane thereby enhancing the life of the RO membrane. More particularly, the present invention relates to a RO water purifier capable of cleaning and flushing of superficial layer of deposition over RO membrane with low concentrate water.

No. of Pages : 10 No. of Claims : 5

(12) PATENT APPLICATION PUBLICATION
(21) Application No.202011030913 A
(19) INDIA
(22) Date of filing of Application :20/07/2020
(43) Publication Date : 16/07/2021

(54) Title of the invention : METHOD AND SYSTEM FOR IDENTIFYING GEOGRAPHICAL ORIGIN BASED ON ACCENT OF VOICE AUDIOS

(51) International classification	:G09B0019060000, G10L0025900000, C07J0001000000, C07J0071000000, G10L0025180000	(71)**Name of Applicant :** **1)Manipal University Jaipur** Address of Applicant :Jaipur-Ajmer Express Highway, Dehmi Kalan, Near GVK Toll Plaza, Jaipur, Rajasthan 303007 India Rajasthan India
(31) Priority Document No	:NA	(72)**Name of Inventor :**
(32) Priority Date	:NA	**1)Dr. Abhishek Sharma**
(33) Name of priority country	:NA	**2)Dr. Sulabh Bansal**
(86) International Application No	:NA	
Filing Date	:NA	
(87) International Publication No	: NA	
(61) Patent of Addition to Application Number	:NA	
Filing Date	:NA	
(62) Divisional to Application Number	:NA	
Filing Date	:NA	

(57) Abstract :
The present disclosure discloses a method and system for identifying geographical origin based on accent of voice audios. The system includes an image processing unit (112) recording body language and gesture of the person during above steps and a speech processing unit (114), and a verification unit (116) for performing if the comparison of the accent of the voice of the person while responding to the predefined set of questions with the prestored accent of the native language is unsuccessful, record a plurality of voice audio samples to create a dataset based on a particular vowel in phonetics; analyze the dataset for modification, wherein the dataset is defined by a plurality of vocal measures, which corresponds to mean, jitter absolute, jitter percentage, jitter rap, jitter PPQ, jitter DDP, shimmer absolute, shimmer percentage, shimmer APQ3, shimmer APQ5, shimmer APQ11, shimmer DDA, NHR, and HNR and normalizing the dataset.

No. of Pages : 28 No. of Claims : 10

(12) PATENT APPLICATION PUBLICATION
(21) Application No.202011032262 A
(19) INDIA
(22) Date of filing of Application :28/07/2020
(43) Publication Date : 16/07/2021

(54) Title of the invention : METHOD, SYSTEM & APPARATUS FOR MACHINE VISION DRONE SWARM CAPABLE OF DOING SEARCH, RESCUE OPERATIONS AND FIREFIGHTING

(51) International classification	:G06K0009000000, B64C0039020000, G05D0001100000, G05D0001000000, H04N0005225000
(31) Priority Document No	:NA
(32) Priority Date	:NA
(33) Name of priority country	:NA
(86) International Application No	:NA
Filing Date	:NA
(87) International Publication No	: NA
(61) Patent of Addition to Application Number	:NA
Filing Date	:NA
(62) Divisional to Application Number	:NA
Filing Date	:NA

(71)**Name of Applicant :**
1)ELIGHT SPM (OPC) PRIVATE LIMITED
Address of Applicant :D 77/C Thokar No 8, Shaheen Bagh, Jamia Nagar, Near Taiyad Masjid DELHI South Delhi DL 110025 Delhi India
2)Mohammad Anas
(72)**Name of Inventor :**
1)Mohammad Anas

(57) Abstract :
According to one aspect, Machine vision drone swarm is a VTOL drone specifically a quadcopter swarm that has the ability of vision-based decision making like humans and beyond that it has vision capabilities and also equipped with the thermal vision capabilities. Further including, the swarm can be deployed in any congested area and the swarm can itself detect and recognize objects even in closed buildings by search and rescue operations/missions and on the same principle it can be used for deploying fire extinguisher capsules to clear path. Addition to this, drone is also equipped with cameras, GPU, an extinguisher capsule or other rescue items and capability to survive even in a extreme temperatures which makes it more durable, powerful, intelligent, compact and impactful. Swarm takes collective decisions using deep Learning in real time with onboard processing capabilities. MVDS will be operated and supervised via ground control station (GCS).

No. of Pages : 20 No. of Claims : 13

(12) PATENT APPLICATION PUBLICATION
(21) Application No.202011035077 A
(19) INDIA
(22) Date of filing of Application :14/08/2020
(43) Publication Date : 16/07/2021

(54) Title of the invention : BREATHABLE COMPOSITE SHEET AND METHOD OF PREPARATION THEREOF

(51) International classification	:C08L0101000000, B32B0037120000, B32B0027120000, B32B0005240000, B32B0038000000	(71)**Name of Applicant :** **1)Aaryan Mirai Private Limited** Address of Applicant :C-44 Rajouri Garden, New Delhi 110027, India Delhi India
(31) Priority Document No	:NA	(72)**Name of Inventor :** **1)Ankit Chawla**
(32) Priority Date	:NA	
(33) Name of priority country	:NA	
(86) International Application No	:NA	
Filing Date	:NA	
(87) International Publication No	: NA	
(61) Patent of Addition to Application Number	:NA	
Filing Date	:NA	
(62) Divisional to Application Number	:NA	
Filing Date	:NA	

(57) Abstract :
The present invention provides a breathable composite sheet (1000) which is aesthetically appealing and provides high strength and durability along with sweat free comfort. The breathable composite sheet (1000) comprises a sequentially arranged layers of skin coat, foam coat, adhesive coat and fabric from bottom to top, which are collectively heated and perforated to obtain a nano-perforated composite sheet. A method of preparing the breathable composite sheet (1000) is also provided.

No. of Pages : 23 No. of Claims : 13

(12) PATENT APPLICATION PUBLICATION
(21) Application No.202011038678 A
(19) INDIA
(22) Date of filing of Application :08/09/2020
(43) Publication Date : 16/07/2021

(54) Title of the invention : A DEVICE AND A METHOD FOR NON INVASIVE ASSESSMENT OF THE QUALITY OF THE PERISHABLE FRUITS AND VEGETABLES

(51) International classification	:G01N0033020000, G01N0021356300, G01J0003020000, G01N0033120000, G01N0033140000	(71)**Name of Applicant :** **1)INFYU LABS PRIVATE LIMITED** Address of Applicant :House No. 28, Kh. No. 38/1, 1st Floor, Amrit Vihar, BLK-A, Burari New Delhi 110084, India Delhi India
(31) Priority Document No	:NA	(72)**Name of Inventor :**
(32) Priority Date	:NA	**1)AMIT SRIVASTAVA**
(33) Name of priority country	:NA	**2)ANKIT CHAUHAN**
(86) International Application No	:NA	
Filing Date	:NA	
(87) International Publication No	: NA	
(61) Patent of Addition to Application Number	:NA	
Filing Date	:NA	
(62) Divisional to Application Number	:NA	
Filing Date	:NA	

(57) Abstract :
A handheld quality assessment device for fruits and vegetables is disclosed which non-invasively determines the internal and external quality parameters of food and vegetables altogether. A quality assaying method comprises the following steps: the fruit and vegetables sample is being excited with different light sources. After that, the reflected spectra of the sample are evaluated in the window of 340nm to 2500nm. This process determines the internal quality parameters such as BRIX value, acidity, shelf-life, firmness, artificial ripeness, etc. The images of the fruit and vegetables sample are acquired at eight different central wavelengths. Then the images are processed to determine the external quality parameters such as pesticide residue, bruises, and foreign objects at the surface. The device comprises of a spectroscopic sensors that gathering the reflected radiation between 340nm to 2500nm by the fruit and vegetable sample.

No. of Pages : 13 No. of Claims : 8

(12) PATENT APPLICATION PUBLICATION
(21) Application No.202011052256 A
(19) INDIA
(22) Date of filing of Application :01/12/2020
(43) Publication Date : 16/07/2021

(54) Title of the invention : WEARABLE SAFETY DEVICE

(51) International classification	:H04N 5/232
(31) Priority Document No	:NA
(32) Priority Date	:NA
(33) Name of priority country	:NA
(86) International Application No	:NA
Filing Date	:NA
(87) International Publication No	: NA
(61) Patent of Addition to Application Number	:NA
Filing Date	:NA
(62) Divisional to Application Number	:NA
Filing Date	:NA

(71)**Name of Applicant :**
1)Sharda University
Address of Applicant :Plot No. 32&34, Knowledge Park III, Greater Noida, Uttar Pradesh-201310, India. Uttar Pradesh India
(72)**Name of Inventor :**
1)Dr. ParmaNand
2)Dr. Nitin Rakesh
3)Abha Kiran Rajpoot
4)Rani Astya
5)Vedangi Agarwal
6)Konark Sharma

(57) Abstract :
The present invention relates to a wearable body device 1 comprises a wearable body 2 having a housing 3 located at a middle portion of the wearable body 2, and crafted with a shooting wire 4 and two shocking pins 5, a switch 6 attached at the side portion of the wearable body 2, wherein the switch 6 is activated by a user, a microcontroller disposed within the housing 3, and to pop out the pins 5 for producing an electric shock in order to incapacitate an attacker 7, a safety band 8 associated to the bottom portion of the wearable body 2 and embedded with an image capturing unit and a tracking unit 9, for tracking one or more activities, a communication unit 10 crafted within the band 8, to enable a pre-defined contact to call on the band 8 having subscriber identification card and listen to the activities.

No. of Pages : 13 No. of Claims : 7

(12) PATENT APPLICATION PUBLICATION
(21) Application No.202011052257 A
(19) INDIA
(22) Date of filing of Application :01/12/2020
(43) Publication Date : 16/07/2021

(54) Title of the invention : MULTI-MODULE MICROBIAL FUEL CELL

(51) International classification	:H01M 8/16	(71)**Name of Applicant :**
(31) Priority Document No	:NA	**1)Sharda University**
(32) Priority Date	:NA	Address of Applicant :Plot No. 32&34, Knowledge Park III, Greater Noida, Uttar Pradesh-201310, India. Uttar Pradesh India
(33) Name of priority country	:NA	(72)**Name of Inventor :**
(86) International Application No	:NA	**1)Dr. Abhilasha Singh Mathuriya**
Filing Date	:NA	**2)Dr. Soumya Pandit**
(87) International Publication No	: NA	
(61) Patent of Addition to Application Number	:NA	
Filing Date	:NA	
(62) Divisional to Application Number	:NA	
Filing Date	:NA	

(57) Abstract :
The present invention relates to a multi-module microbial fuel cell device comprising a housing 1 constructed with an inlet port 2, wherein the inlet port 2 provide a means for entering a feedstock, plurality of anode chambers 3 arranged within the housing 1 and incorporated with a microbial sheath 14 coated anode wire mesh 4 to facilitate electron transfer from the sheath 14 to the mesh 4, wherein the sheath 14 also treat the feedstock, multiple separator-cathode junctures 5 electrically coupled with corresponding the anode chambers 3 for receiving the electrons in order to generate electricity, an external resistor 6 coupled with electric wires 7 for limiting flow of excess of the electricity, wherein the electric wires collects current generated from the cathode junctures 5, and an outlet port 8 connected with the housing 1 for discharging the treated feedstock.

No. of Pages : 16 No. of Claims : 7

(12) PATENT APPLICATION PUBLICATION
(21) Application No.202011054096 A
(19) INDIA
(22) Date of filing of Application :12/12/2020
(43) Publication Date : 16/07/2021

(54) Title of the invention : A PROCESS OF MAKING PURE JAGGERY HAVING GOOD BINDING PROPERTY AND PRODUCTS THEREOF

(51) International classification	:H01M0004620000, H01G0011380000, C09J0011040000, C07K0016280000, A61K0047340000	(71)**Name of Applicant :** **1)Viney Kumar Bana** Address of Applicant :04102, ATS Paradiso, Sec- Chi IV Greater Noida, Uttar Pradesh-201310, India Uttar Pradesh India (72)**Name of Inventor :** **1)Viney Kumar Bana**
(31) Priority Document No	:NA	
(32) Priority Date	:NA	
(33) Name of priority country	:NA	
(86) International Application No	:NA	
Filing Date	:NA	
(87) International Publication No	: NA	
(61) Patent of Addition to Application Number	:NA	
Filing Date	:NA	
(62) Divisional to Application Number	:NA	
Filing Date	:NA	

(57) Abstract :
The invention discloses a process of making pure jaggery with good binding property and products thereof. In the process includes adding of kacchi khand instead of white sugar during when sugarcane is found to be deficient in sucrose content. The process provides natural and pure chemical free jaggery. The invention discloses cardamom powder as binding agent and hence jaggery produced can withstand extreme temperature during summer and also has good taste and flavor.

No. of Pages : 14 No. of Claims : 8

(12) PATENT APPLICATION PUBLICATION
(21) Application No.202111000110 A
(19) INDIA
(22) Date of filing of Application :02/01/2021
(43) Publication Date : 16/07/2021

(54) Title of the invention : AN APPARATUS AND METHOD TO MANAGE COURIER SERVICE

(51) International classification	:G06Q0010100000, B07C0003000000, G09B0005000000, G06Q0099000000, G06Q0050280000	(71)**Name of Applicant :** **1)AJAY MANDA** Address of Applicant :H NO 1179 SECTOR 18C CHANDIGARH 160018 Chandigarh India (72)**Name of Inventor :** **1)AJAY MANDA**
(31) Priority Document No	:NA	
(32) Priority Date	:NA	
(33) Name of priority country	:NA	
(86) International Application No	:NA	
Filing Date	:NA	
(87) International Publication No	: NA	
(61) Patent of Addition to Application Number	:NA	
Filing Date	:NA	
(62) Divisional to Application Number	:NA	
Filing Date	:NA	

(57) Abstract :
An apparatus and method to manage courier service is provided. The apparatus comprises a processing unit comprising a processor operatively coupled to a memory, the memory stores instructions executable by the processor, wherein the processing unit comprises: an input module configured to receive user data; a unique code generation module configured to generate a unique code associated to user data; a unique code authentication module configured to authenticate the unique code received by the user, when the user initiates the process of courier service. A weight machine operatively coupled to the processing unit, wherein the weight machine comprises: a weight measurement scale configured to measure a weight product which the user wishes to courier. The apparatus further comprises a display interface configured to: display the weight of the product to be couriered; and display a receipt. A printing unit configured to print the receipt on a surface of the product.

No. of Pages : 26 No. of Claims : 10

(12) PATENT APPLICATION PUBLICATION
(19) INDIA
(22) Date of filing of Application :30/01/2021
(21) Application No.202111004175 A
(43) Publication Date : 16/07/2021

(54) Title of the invention : A VACUUM SYSTEM AND METHOD THEREOF

(51) International classification	:E02F0003920000, F02M0035100000, F25B0027000000, F03B0017000000, G06F0001329600	(71)**Name of Applicant :** **1)Dr. Surinder Kumar Sharma** Address of Applicant :769, sector 16, Panchkula, Haryana-134113, India Haryana India (72)**Name of Inventor :** **1)Dr. Surinder Kumar Sharma**
(31) Priority Document No	:NA	
(32) Priority Date	:NA	
(33) Name of priority country	:NA	
(86) International Application No	:NA	
Filing Date	:NA	
(87) International Publication No	: NA	
(61) Patent of Addition to Application Number	:NA	
Filing Date	:NA	
(62) Divisional to Application Number	:NA	
Filing Date	:NA	

(57) Abstract :
The present invention relates to an energy efficient, environment friendly and cost effective system for vacuum generation in compartments of all sizes. The technology used in this system optimizes the efficiency of vacuum generation without significant power consumption. The present invention eliminates the usage of a vacuum pump which generates substantial heat and is energy intensive to create hypobaric conditions in large chambers. The vacuum system comprising atleast a liquid reservoir, a pump, a process chamber, a compartment, liquid carrying sources and atleast two valves.

No. of Pages : 28 No. of Claims : 10

(12) PATENT APPLICATION PUBLICATION
(21) Application No.202111016535 A
(19) INDIA
(22) Date of filing of Application :08/04/2021
(43) Publication Date : 16/07/2021

(54) Title of the invention : A SYSTEM FOR OPTIMIZED QUANTITATIVE ESTIMATION OF THERMAL MATURITY OF CRUDE OIL

(51) International classification	:B63B0035440000, H04M0003510000, B60L0058200000, C11D0007060000, G05B0023020000
(31) Priority Document No	:NA
(32) Priority Date	:NA
(33) Name of priority country	:NA
(86) International Application No	:NA
Filing Date	:NA
(87) International Publication No	: NA
(61) Patent of Addition to Application Number	:NA
Filing Date	:NA
(62) Divisional to Application Number	:NA
Filing Date	:NA

(71)**Name of Applicant :**
1)Oil and Natural Gas Corporation Limited
Address of Applicant :Pandit Deendayal Upadhyaya Urja Bhawan, 5, Nelson Mandela Marg, Vasant Kunj, New Delhi-110070, India Delhi India

(72)**Name of Inventor :**
1)Shweta Chauhan
2)Asim Samanta
3)Sapna Sethi
4)Mala Janardhanan

(57) Abstract :
A system (100) for optimized quantitative estimation of thermal maturity of crude oil is provided. The system (100) comprises a distillation unit (102) for distilling crude oil at a temperature of up to 210°C for removing lighter fraction of the crude oil; a deasphalting unit (114) for deasphalting crude oil by refluxing with n-hexane for removing asphaltenes and obtaining maltene present in the crude oil; an aromatic fraction separation unit (104) for separating saturated fraction and aromatic fraction from the maltene; a spectroscopic unit (106), executed by a processor (110), for obtaining spectrum of the aromatic fraction; and a thermal maturity estimation unit (108), executed by the processor (110), for determining thermal maturity of the crude oil by determining Fourier Transform Infrared (FTIR) ratio of aromatic to aliphatic spectral peaks obtained in FTIR spectrum and correlating the determined FTIR ratio with a crude oil maturity parameter.

No. of Pages : 19 No. of Claims : 14

(12) PATENT APPLICATION PUBLICATION
(19) INDIA
(22) Date of filing of Application :08/04/2021
(21) Application No.202111016536 A
(43) Publication Date : 16/07/2021

(54) Title of the invention : A METHOD FOR ASSESSING SHALE GAS POTENTIAL OF UNCONVENTIONAL RESERVOIRS

(51) International classification	:E21B0049000000, E21B0043260000, C02F0001520000, C09K0008860000, C02F0009000000	(71)**Name of Applicant :** **1)Oil and Natural Gas Corporation Limited** Address of Applicant :Pandit Deendayal Upadhyaya Urja Bhawan, 5, Nelson Mandela Marg, Vasant Kunj, New Delhi-110070, India Delhi India
(31) Priority Document No	:NA	(72)**Name of Inventor :**
(32) Priority Date	:NA	**1)Jyoti Verma**
(33) Name of priority country	:NA	**2)Pradeep Singh Tomar**
(86) International Application No	:NA	**3)Deepak Kapoor**
Filing Date	:NA	**4)Harilal**
(87) International Publication No	: NA	
(61) Patent of Addition to Application Number	:NA	
Filing Date	:NA	
(62) Divisional to Application Number	:NA	
Filing Date	:NA	

(57) Abstract :
A method for assessing shale gas potential of unconventional formation based on an estimation of continuous TOC using conventionally recorded logs is provided. In operation, one or more types of clay and minerals in unconventional formation are identified using NGS cross-plot analysis. Further, effective porosity, effective hydrocarbon saturation, and volume of identified one or more types of clay and minerals throughout unconventional formation are evaluated based on conventionally recorded logs. Further, continuous density porosity throughout unconventional formation is evaluated. Furthermore, continuous volume of kerogen throughout unconventional formation is evaluated based on effective porosity, density porosity and volume of identified one or more types of clay. Yet further, volume of organic rich shale throughout unconventional formation is evaluated using conventionally recorded GR and Resistivity log. Yet further, continuous TOC throughout unconventional formation is evaluated based on volume of organic shale and volume of kerogen, whereby shale gas potential is assessed.

No. of Pages : 25 No. of Claims : 13

(12) PATENT APPLICATION PUBLICATION
(21) Application No.202111024124 A
(19) INDIA
(22) Date of filing of Application :31/05/2021
(43) Publication Date : 16/07/2021

(54) Title of the invention : ARTIFICIAL INTELLIGENCE BASED WATER FILTRATION SYSTEM

(51) International classification	:C02F0001440000, C02F0001000000, C02F0103080000, C02F0001040000, B01D0061020000	(71)**Name of Applicant :** **1)Himalayan Water Science Private Limited** Address of Applicant :36, Kamlawadi, Gulab Bagh Road, Opp. Hotel Maan, Udaipur - 313001, Rajasthan, India. Rajasthan India
(31) Priority Document No	:NA	(72)**Name of Inventor :**
(32) Priority Date	:NA	**1)NEBHNANI, Nitesh**
(33) Name of priority country	:NA	**2)NEBHNANI, Kapil**
(86) International Application No	:NA	
Filing Date	:NA	
(87) International Publication No	: NA	
(61) Patent of Addition to Application Number	:NA	
Filing Date	:NA	
(62) Divisional to Application Number	:NA	
Filing Date	:NA	

(57) Abstract :
A water filtration system is disclosed, comprising a desalination unit to separate feed water from a water source into desalinated water and concentrated water, a storage tank to receive the concentrated water from the desalination unit and to allow flow of at least a portion of the concentrated water from the storage tank to a feed water conduit for mixing with raw water coming from the water source to achieve a predefined TDS valve of the feed water, a first sensor to sense TDS value of the concentrated water present in the storage tank, a pump to regulate flow of the at the concentrated water from the storage tank to the feed water conduit, and a control unit to control operation of the pump for regulating flow of the concentrated water from the storage tank to achieve a predefined TDS valve of the feed water.

No. of Pages : 29 No. of Claims : 10

(12) PATENT APPLICATION PUBLICATION
(21) Application No.202111024392 A
(19) INDIA
(22) Date of filing of Application :01/06/2021
(43) Publication Date : 16/07/2021

(54) Title of the invention : A SYSTEM AND METHOD FOR QUANTITATIVE ESTIMATION OF THERMAL MATURITY OF CRUDE OIL

(51) International classification	:G05B0023020000, F01K0007160000, G02B0021140000, C11B0001060000, C10G0033040000	(71)**Name of Applicant :** **1)Oil and Natural Gas Corporation Limited** Address of Applicant :Pandit Deendayal Upadhyaya Urja Bhawan, 5, Nelson Mandela Marg, Vasant Kunj, New Delhi-110070, India Delhi India
(31) Priority Document No	:NA	(72)**Name of Inventor :**
(32) Priority Date	:NA	**1)Asim Samanta**
(33) Name of priority country	:NA	**2)Ishita Dutta**
(86) International Application No	:NA	**3)Shweta Chauhan**
Filing Date	:NA	**4)Sapna Sethi**
(87) International Publication No	: NA	**5)Mala Janardhanan**
(61) Patent of Addition to Application Number	:NA	
Filing Date	:NA	
(62) Divisional to Application Number	:NA	
Filing Date	:NA	

(57) Abstract :
A system (100) and a method for optimally determining thermal maturity of an oil sample is provided. The system (100) comprises a diluting unit (102) for diluting a sample of crude oil in a non-polar non-fluorescent solvent and a fluorescence spectrophotometer unit (106) for measuring a 2D emission spectrum of the diluted crude oil sample at a fixed excitation wavelength of 270 nm and determining a fluorescence ratio (I360/ 1320). Further, the system (100) comprises a thermal maturity estimation unit (108) for correlating the fluorescence ratio (I360/I320) to a vitrinite reflectance calculated (VRc) for quantitatively determining maturity of crude oil.

No. of Pages : 20 No. of Claims : 24

(12) PATENT APPLICATION PUBLICATION
(21) Application No.202111025045 A
(19) INDIA
(22) Date of filing of Application :05/06/2021
(43) Publication Date : 16/07/2021

(54) Title of the invention : SYSTEM AND METHOD FOR WEB-BASED AUTOMATIC CODE GENERATION AND EXECUTION

(51) International classification	:G06F0011360000, H04L0012240000, G06F0011340000, H04L0012260000, G06F0008340000	(71)**Name of Applicant :** **1)Sunil Kumar Chauhan** Address of Applicant :HN 337, Sector 17, Faridabad, Haryana 121002 Haryana India **2)Vartika Chauhan**
(31) Priority Document No	:NA	(72)**Name of Inventor :**
(32) Priority Date	:NA	**1)Sunil Kumar Chauhan**
(33) Name of priority country	:NA	**2)Vartika Chauhan**
(86) International Application No	:NA	
Filing Date	:NA	
(87) International Publication No	: NA	
(61) Patent of Addition to Application Number	:NA	
Filing Date	:NA	
(62) Divisional to Application Number	:NA	
Filing Date	:NA	

(57) Abstract :
A system and process for web based automatic code generation and execution, the process comprising the steps of an end-user triggers an operation through a suitable interface followed by said operation is forwarded to the said memory unit that hosts a software automation tool, followed by processing the operation in its processor, said process triggers an execution of said process and the output is produced in a suitable output interface, followed by, the result of the execution is sent to said system hosting said automation tool which is executed on said processor. This is followed by end-user action that opens the input user interface and selects a batch URL, the execution request is then sent to said automation tool, which sends the request further to the processor. The processor after execution sends the real-time results to the automation tool followed by access of report by the end-user through a suitable user interface.

No. of Pages : 20 No. of Claims : 7

(12) PATENT APPLICATION PUBLICATION
(21) Application No.202111025353 A
(19) INDIA
(22) Date of filing of Application :07/06/2021
(43) Publication Date : 16/07/2021

(54) Title of the invention : SYSTEM AND METHOD FOR EXCHANGING DIGITAL CURRENCY VIA A SMART DIGITAL WALLET

(51) International classification	:G06Q0020360000, G06Q0020380000, G06Q0020060000, G06Q0020120000, G06Q0030060000	(71)**Name of Applicant :** **1)HIMANSHU RATRA** Address of Applicant :H. NO. 1317, SECTOR 18, OLD FARIDABAD, FARIDABAD, HARYANA Haryana India (72)**Name of Inventor :** **1)HIMANSHU RATRA**
(31) Priority Document No	:NA	
(32) Priority Date	:NA	
(33) Name of priority country	:NA	
(86) International Application No	:NA	
Filing Date	:NA	
(87) International Publication No	: NA	
(61) Patent of Addition to Application Number	:NA	
Filing Date	:NA	
(62) Divisional to Application Number	:NA	
Filing Date	:NA	

(57) Abstract :
The present invention describes a system and method for exchanging digital currency via a smart digital wallet. A user can use the digital currency to perform an online transaction at any receiver. The receiver can be a retailer, a friend or a third-party. The system automatically deducts the nearest purchased amount from the user™s smart digital wallet, which is in the denomination of digital currency, and adds the remaining amount itself. Further, the receiver receives the whole amount from the user in his/her smart digital wallet. The system adds the nearest purchased amount in his/her smart digital wallet directly and blocks the remaining amount paid by the system until the blocked amount is greater than or equivalent to the digital currency denomination.

No. of Pages : 25 No. of Claims : 14

(12) PATENT APPLICATION PUBLICATION
(21) Application No.202111026159 A
(19) INDIA
(22) Date of filing of Application :11/06/2021
(43) Publication Date : 16/07/2021

(54) Title of the invention : A PORTABLE GAS BURNER LABORATORY TABLE

(51) International classification	:F24C0003140000, A47K0001020000, E03C0001182000, E03C0001140000, A47B0037000000
(31) Priority Document No	:NA
(32) Priority Date	:NA
(33) Name of priority country	:NA
(86) International Application No	:NA
Filing Date	:NA
(87) International Publication No	: NA
(61) Patent of Addition to Application Number	:NA
Filing Date	:NA
(62) Divisional to Application Number	:NA
Filing Date	:NA

(71)**Name of Applicant :**
1)Abhay Arya
Address of Applicant :House No. 34, Arya Complex, Near Railway Phatak, Balsamand Road, Hisar, Haryana Haryana India
2)Lovleen Gupta
(72)**Name of Inventor :**
1)Abhay Arya
2)Lovleen Gupta

(57) Abstract :
A portable gas burner laboratory table structure is disclosed. The structure comprises a frame with a rectangular/square top and at least two pair of detachable legs extending longitudinally from the rectangular/square top; a slot in the sheet for inserting a wash basin in a top surface of the rectangular/square top; an openable gas pipe fitting using pigtail pipes for supplying gas to the wash basin; a water supply pipe fitting for supplying water to the wash basin; a drainage pipe positioned at a base of the wash basin to drain out waste from the wash basin; one or more tap fitted in the wash basin for regulating the flow of water; and one or more burner fitting near the wash basin for regulating the flow of gas(es). The at least two pair of legs are detachable from the rectangular/square top, and each of the pair of legs comprises two longitudinal legs joined together by a detachable attachment.

No. of Pages : 26 No. of Claims : 9

(12) PATENT APPLICATION PUBLICATION
(21) Application No.202111026271 A
(19) INDIA
(22) Date of filing of Application :12/06/2021
(43) Publication Date : 16/07/2021

(54) Title of the invention : A SYSTEM AND METHOD OF DIGITALIZATION OF THE CHALLAN GENERATION IN THE TRAFFIC MANAGEMENT

(51) International classification	:G08G0001017000, G08G0001052000, G06F0012081500, H04W0048080000, G08G0001040000
(31) Priority Document No	:NA
(32) Priority Date	:NA
(33) Name of priority country	:NA
(86) International Application No	:NA
Filing Date	:NA
(87) International Publication No	: NA
(61) Patent of Addition to Application Number	:NA
Filing Date	:NA
(62) Divisional to Application Number	:NA
Filing Date	:NA

(71)**Name of Applicant :**
1)Ms. Ranjana Sharma
Address of Applicant :Assistant Professor, College of Computing sciences & IT, Teerthanker Mahaveer University, Moradabad (U.P.) India Uttar Pradesh India
2)Prof. (Dr.) R.K. Dwivedi
3)Dr. Rajeev Kumar
4)Mr. Sunil Kumar
5)Dr. Tushar Agarwal
6)Dr. Naveen Pandey
7)Dr. Syed Mohtashim Mian
8)Mr. Ritik Agarwal
(72)**Name of Inventor :**
1)Ms. Ranjana Sharma
2)Prof. (Dr.) R.K. Dwivedi
3)Dr. Rajeev Kumar
4)Mr. Sunil Kumar
5)Dr. Tushar Agarwal
6)Dr. Naveen Pandey
7)Dr. Syed Mohtashim Mian
8)Mr. Ritik Agarwal

(57) Abstract :
The present system is related to traffic management system which can generate the challan against the traffic rules violators and the generated challan is notified through a message on their smart device about when, where, and how much challan has been imposed to them. The present invention eliminated the human intervention in imposing fines for traffic violations and the present system also enable to keep a track of RTO™s challan funds and will reduce corruption. Fig 1 is the schematic representation of the present system of challan generation for traffic violation.

No. of Pages : 29 No. of Claims : 9

(12) PATENT APPLICATION PUBLICATION
(21) Application No.202111026649 A
(19) INDIA
(22) Date of filing of Application :15/06/2021
(43) Publication Date : 16/07/2021

(54) Title of the invention : METHOD AND SYSTEM FOR IDENTIFYING A DISEASE THROUGH IMAGE PROCESSING

(51) International classification	:G06T0007000000, G16H0050200000, G06K0009620000, G16H0050300000, A61P0035000000
(31) Priority Document No	:NA
(32) Priority Date	:NA
(33) Name of priority country	:NA
(86) International Application No	:NA
Filing Date	:NA
(87) International Publication No	: NA
(61) Patent of Addition to Application Number	:NA
Filing Date	:NA
(62) Divisional to Application Number	:NA
Filing Date	:NA

(71)**Name of Applicant :**
1)HCL Technologies Limited
Address of Applicant :806, Siddharth, 96, Nehru Place, New Delhi - 110019, India Delhi India
(72)**Name of Inventor :**
1)Jayaramakrishnan Sundararaj
2)Harikrishna C Warrier
3)Banish Bansal
4)Renith G

(57) Abstract :
This disclosure relates to method and system for identifying a disease through image processing. The method (800) includes receiving (801) image data corresponding to a patient from a data source; and preprocessing (802) the image data through a predictive model to obtain a disease-specific image dataset. The method (800) further includes, for each image in the disease-specific image dataset, identifying (807) a disease associated with the patient from a plurality of diseases using the disease-specific image dataset through a Hybrid Neural Architecture Search (H-NAS) model. The H-NAS model includes a plurality of NAS models. Each of the plurality of NAS models provides an output accuracy score for an image. Each of the plurality of diseases comprises a set of stages. The method (800) further includes, for each of the plurality of NAS models, determining (808) a stage from the set of stages associated with the identified disease from the image based on the output accuracy score.

No. of Pages : 55 No. of Claims : 12

(12) PATENT APPLICATION PUBLICATION
(21) Application No.202111026703 A
(19) INDIA
(22) Date of filing of Application :15/06/2021
(43) Publication Date : 16/07/2021

(54) Title of the invention : AN ELECTRIC CIRCUIT TO DRIVE AN ALTERNATING CURRENT INDUCTION MOTOR (ACIM) FROM DIRECT CURRENT

(51) International classification	:H02J0007140000, H02J0005000000, B60N0002000000, H02K0007020000, H01M0010460000	(71)**Name of Applicant :** **1)Tanveer Ahmad** Address of Applicant :Domehla Road Ghair Sefuddin Khan, Rampur, 244901, U.P. (INDIA) Uttar Pradesh India (72)**Name of Inventor :** **1)Tanveer Ahmad**
(31) Priority Document No	:NA	
(32) Priority Date	:NA	
(33) Name of priority country	:NA	
(86) International Application No	:NA	
Filing Date	:NA	
(87) International Publication No	: NA	
(61) Patent of Addition to Application Number	:NA	
Filing Date	:NA	
(62) Divisional to Application Number	:NA	
Filing Date	:NA	

(57) Abstract :
The present invention discloses an electric circuit to drive an Alternating Current induction motor (ACIM) from Direct Current. The electric circuit includes, but not limited to, a plurality of MOSFETs (metal“oxide“semiconductor field-effect transistor) provided with two or more switching location in the electric circuit, which is having two MOSFETs placement with a Push-Pull mechanism and/or couple of two MOSFETs placement with a bridge mechanism; at least one oscillator to make two or more triggers pals for frequency and switching; a plurality of condensers provided to reduce a square wave; a winding provided optionally with a center tap is connected in the electric DC source to further produce the direct current for activating and rotating a rotor of the Alternating Current induction motor (ACIM). The oscillator is configured to activate and programmed anyone of the single MOSFET (102, 103) by using a Push-Pull Mechanism or a pair of MOSFET (102a) and (102b) by using a bridge mechanism, enabling the electric circuit for supplying AC current into the motor (101) winding.

No. of Pages : 26 No. of Claims : 8

(12) PATENT APPLICATION PUBLICATION
(21) Application No.202111026713 A
(19) INDIA
(22) Date of filing of Application :16/06/2021
(43) Publication Date : 16/07/2021

(54) Title of the invention : EFFICIENT FINANCE MANAGEMENT BASED ON SOFTWARE FOR AUTONOMOUS COST ANALYSIS APPLICATION

(51) International classification	:H04L0012715000, G06Q0010060000, G06N0003000000, G06N0020000000, G06N0005020000
(31) Priority Document No	:NA
(32) Priority Date	:NA
(33) Name of priority country	:NA
(86) International Application No	:NA
Filing Date	:NA
(87) International Publication No	: NA
(61) Patent of Addition to Application Number	:NA
Filing Date	:NA
(62) Divisional to Application Number	:NA
Filing Date	:NA

(71)**Name of Applicant :**
1)Mr.P. Prasant,CT University
Address of Applicant :#305 CT University Faculty Residence CT University Ferozpr Road Ludhiana Punjab India 142024 Punjab India
2)Dr. Sachin Sharma,CT University
3)Dr. Kavita Sharma,Mbachandigarh University
4)Dr.Amrinder Singh,Jain University
5)Mr.Harvinder Singh,Seth Jai Parkash Mukand Lal Institute of Engineering and Technology
6)Dr. Datrika Venkata Madhusudan Rao,Jain Deemed To Be University
7)Dr.Arokiaraj David,Jain University
8)Dr. Shreevamshi,Jain University
9)Dr.Pritpal Singh Bhullar,Maharaja Ranjit Singh Punjab Technical University
10)Dr.Girish Kumar Painoli,Jain University
(72)**Name of Inventor :**
1)Mr.P. Prasant,CT University
2)Dr. Sachin Sharma,CT University
3)Dr. Kavita Sharma,Mbachandigarh University
4)Dr.Amrinder Singh,Jain University
5)Mr.Harvinder Singh,Seth Jai Parkash Mukand Lal Institute of Engineering and Technology
6)Dr. Datrika Venkata Madhusudan Rao,Jain Deemed To Be University
7)Dr.Arokiaraj David,Jain University
8)Dr. Shreevamshi,Jain University
9)Dr.Pritpal Singh Bhullar,Maharaja Ranjit Singh Punjab Technical University
10)Dr.Girish Kumar Painoli,Jain University

(57) Abstract :
In the current era, technology has involved in various fields providing innovative solutions especially artificial intelligence, provides autonomous systems for taking smart decisions. This invention focuses on system of financial management which conventionally relies on human resource. The proposed system involves artificial intelligence with programming software to promote autonomous system of financial management in an intelligent way. Human involved in prediction of financial management problems to take any decision are very slow. We focus on cost analysis application where we are able to attain intelligent system for financial management with intellectualization, rationalization and specialization. This system provides several advantages and provides guarantee for an autonomous system especially for cost analysis application. This work provides constructive solution based on the programming nature of artificial intelligence for financial management.

No. of Pages : 11 No. of Claims : 6

(12) PATENT APPLICATION PUBLICATION
(21) Application No.202111026791 A
(19) INDIA
(22) Date of filing of Application :16/06/2021
(43) Publication Date : 16/07/2021

(54) Title of the invention : ANGRAKSHAK HELMET: PROTECTING SOLDIERS

(51) International classification	:A63F 13/58
(31) Priority Document No	:NA
(32) Priority Date	:NA
(33) Name of priority country	:NA
(86) International Application No	:NA
Filing Date	:NA
(87) International Publication No	: NA
(61) Patent of Addition to Application Number	:NA
Filing Date	:NA
(62) Divisional to Application Number	:NA
Filing Date	:NA

(71)**Name of Applicant :**
1)Venkatesh Bharti
Address of Applicant :Official Address -: MCA ,2nd Semester Student, Faculty of Computer Applications, Manav Rachna international Institute of Research and Studies,Faridabad Personal Address -: A-61 c DDA Flats ,Shivaji Enclave ,Rajouri Garden ,New Delhi ,110027, India Delhi India
2)Dr. Sachin Sharma
3)Dr. Anupriya Jain
4)Ms.Neerja Negi
5)Dr. Sonia Duggal
6)Dr. Seema Sharma
(72)**Name of Inventor :**
1)Venkatesh Bharti

(57) Abstract :
This head defender is outfitted with the Chip, Sensor, LCD (liquid-crystal display) show and an engine which will help the warrior with recognizing the human by giving a vibration when an enemy endeavors to attack the fighter. With this innovation, the fighter can distinguish the adversary that can attack from back and just as the warrior can get distance of the enemy through the LCD (liquid-crystal display) screen connected to the protective cap. By utilizing this protective cap fighter can save himself by some sort of threat from the back. In like manner, this structure will be helpful when the Soldier goes alone to the field Instructed by the Head General Officer, where an enemy can attack the warrior from any bearing. The significant advantage of this framework would be: 1. The head protector will deal with solider from the rear up to 10 meters in 180 degree point. 2. It will help the solider by giving the distance of the enemy who will attempt to attack him from the back. 3. This framework will give the security to the solider by giving a vibration when foe attempts to draw close to the solider from the posterior. 4. It's a little advance to save our soldiers life from the adversary.

No. of Pages : 7 No. of Claims : 4

(12) PATENT APPLICATION PUBLICATION
(21) Application No.202111026801 A
(19) INDIA
(22) Date of filing of Application :16/06/2021
(43) Publication Date : 16/07/2021

(54) Title of the invention : AUTOMATED SYSTEM AND METHOD FOR RECOGNITION OF DIABETIC RETINOPATHY USING SEGMENTATION OF RETINAL BLOOD VESSELS

(51) International classification	:G06K0009620000, A61B0003120000, G06T0007000000, G06T0007110000, G06K0009340000
(31) Priority Document No	:NA
(32) Priority Date	:NA
(33) Name of priority country	:NA
(86) International Application No	:NA
Filing Date	:NA
(87) International Publication No	: NA
(61) Patent of Addition to Application Number	:NA
Filing Date	:NA
(62) Divisional to Application Number	:NA
Filing Date	:NA

(71)**Name of Applicant :**
1)Dr. Sukhpreet Kaur
Address of Applicant :Chandigarh Group of Colleges Landran, Kharar-Banur Highway, Sector 112, Greater Mohali, Punjab 140307 (INDIA) Punjab India
2)Dr. Yogesh Kumar
3)Dr.Sushil kumar
4)Dr. Ranbir Singh Batth
5)Mr. Rohit Daid
6)Ms. Poonam Bhargav
(72)**Name of Inventor :**
1)Dr. Sukhpreet Kaur
2)Dr. Yogesh Kumar
3)Dr.Sushil kumar
4)Dr. Ranbir Singh Batth
5)Mr. Rohit Daid
6)Ms. Poonam Bhargav

(57) Abstract :
The present invention generally relates toanautomated system and method for recognition of diabetic retinopathyusingsegmentation of retinal blood vessels.The method comprises extracting green channelfrom retinal images thereby converting green channel into gray level images for reducing complexity; enhancing contrast of the gray level images using CLAHE and filtering the grey level images using directional filters; segmenting the filtered images in normal retinal images and pathological images using clustering, in which clusters from the initial seed points is formed for assigning neighbor pixels to specific cluster based on its value; extracting features from normal and pathological retinas using ICA technique thereafter saving extracted features in a feature vector; optimizing values of features by computing high entropy using entropy-based optimization approach; and selecting optimized features and thereby classifying the retinal images into normal or abnormal category for recognition of diabetic retinopathy using SVM by creating hyperplanes.

No. of Pages : 24 No. of Claims : 10

(12) PATENT APPLICATION PUBLICATION
(21) Application No.202111026825 A
(19) INDIA
(22) Date of filing of Application :16/06/2021
(43) Publication Date : 16/07/2021

(54) Title of the invention : E-HEALTH MONITORING AND ATTENDANCE TRACKING SYSTEM

(51) International classification	:G16H0020300000, A61B0005110000, G07C0001100000, H04N0007180000, A63B0071060000
(31) Priority Document No	:NA
(32) Priority Date	:NA
(33) Name of priority country	:NA
(86) International Application No	:NA
Filing Date	:NA
(87) International Publication No	: NA
(61) Patent of Addition to Application Number	:NA
Filing Date	:NA
(62) Divisional to Application Number	:NA
Filing Date	:NA

(71)**Name of Applicant :**
1)GRAPHIC ERA (DEEMED TO BE) UNIVERSITY
Address of Applicant :566/6, Bell Road, Clement Town, Dehradun 248002, Uttarakhand, India Uttarakhand India
2)GRAPHIC ERA HILL UNIVERSITY, DEHRADUN CAMPUS
(72)**Name of Inventor :**
1)Dr. VIKAS TRIPATHI
2)Dr.MAHESH MANCHANDA
3)UMANG GARG
4)Dr. KUMUD PANT

(57) Abstract :
The invention discloses an E-Health Monitoring and Attendance Tracking System (EHMATS) 100 for providing a touch-less e-health monitoring as well as attendance tracking in an organization, said system 100 comprising: a pre-processor 102; a computer readable medium 104; a display 106; a user interface 108; an external device 110; a communication network 112; and an e-health monitoring and tracking device 200. The e-health monitoring and tracking device 200 further comprising: a plurality of sensors 201, a communication module 202, a face scanning module 203, an alerting module 204, a Arduino Uno 208, a 3-D Printing Module 205, a plurality of cameras 209, a processor 206, and a memory 207 communicatively coupled to the processor. The memory 207 stores processor instructions, which, on execution, causes the processor to provide a touch-less e-health monitoring as well as attendance tracking of each person.

No. of Pages : 28 No. of Claims : 8

(12) PATENT APPLICATION PUBLICATION
(19) INDIA
(22) Date of filing of Application :16/06/2021
(21) Application No.202111026886 A
(43) Publication Date : 16/07/2021

(54) Title of the invention : SYSTEM AND METHOD FOR A SAFETY HELMET

(51) International classification	:A42B0003040000, A42B0003280000, A61N0001368000, H04B0005000000, A42B0003300000
(31) Priority Document No	:NA
(32) Priority Date	:NA
(33) Name of priority country	:NA
(86) International Application No	:NA
Filing Date	:NA
(87) International Publication No	: NA
(61) Patent of Addition to Application Number	:NA
Filing Date	:NA
(62) Divisional to Application Number	:NA
Filing Date	:NA

(71)**Name of Applicant :**
1)AKHILESHWAR NIRALA
Address of Applicant :Address: H. No-184, Block-B, Shiv Colony, Gali No.3, Palla No.1, Faridabad, Haryana, PIN-121003, India Haryana India
2)Dr BRIJESH SINGH
3)Dr. KAMALAKANTA MUDULI
4)RAJESH KUMAR BEHERA
5)CHINMAY AGRAWAL
6)GAURAV KUMAR SHARMA
7)AYUSHMAAN VATSH
8)JASPREET
(72)**Name of Inventor :**
1)AKHILESHWAR NIRALA
2)Dr BRIJESH SINGH
3)Dr. KAMALAKANTA MUDULI
4)RAJESH KUMAR BEHERA
5)CHINMAY AGRAWAL
6)GAURAV KUMAR SHARMA
7)AYUSHMAAN VATSH
8)JASPREET

(57) Abstract :
A safety helmet system (100) comprising: a helmet (102) comprising: sensors (108a-108n) configured to sense signals representing attributes inside the helmet (102), wherein the attributes is a presence of a head of the rider inside the helmet (102), an alcohol level inside the helmet (102); a helmet controller (110) configured to: receive sensed signals from the sensors (108a-108n); transmit the sensed signals to an ignition controller (116) using a first Near Field Communication (NFC) device (112); and an ignition controller (116) configured to: receive the sensed signals using a second Near Field Communication (NFC) device (118); determine a status of the attributes based on the received sensed signals, wherein the attributes is the presence of the head of the rider inside the helmet (102); and disconnect a power supply to an ignition (120) of the vehicle (104) using a relay (122) when the determined status of the attributes is negative.

No. of Pages : 31 No. of Claims : 10

(12) PATENT APPLICATION PUBLICATION
(21) Application No.202111026919 A
(19) INDIA
(22) Date of filing of Application :16/06/2021
(43) Publication Date : 16/07/2021

(54) Title of the invention : E-STAPLE SPLINT TECHNIQUE TO SAVIOUR THE CRITICALLY FAILED TOOTH

(51) International classification	:A61F0005058000, A61C0005700000, A61C0013300000, D04H0018020000, A61F0002000000	(71)**Name of Applicant :** **1)Dr Ekta Choudhary** Address of Applicant :10/59 VIKRAM VIHAR LAJPAT NAGAR - 4 NEW DELHI Delhi India **2)Dr Ashish Choudhary** **3)Dr Anu Vashisht** **4)Arnav Choudhary**
(31) Priority Document No	:NA	
(32) Priority Date	:NA	
(33) Name of priority country	:NA	
(86) International Application No	:NA	
Filing Date	:NA	
(87) International Publication No	: NA	
(61) Patent of Addition to Application Number	:NA	
Filing Date	:NA	
(62) Divisional to Application Number	:NA	
Filing Date	:NA	

(72)**Name of Inventor :**
1)Dr Ekta Choudhary
2)Dr Ashish Choudhary
3)Dr Anu Vashisht
4)Arnav Choudhary

(57) Abstract :
Innovative E Staple- splint, creating beam effect against canal wall and over fracture line followed by reinforcement with composite resin to secure fragment and SALVAGE coronal mesio-distal vertically fractured Molar at more economical and URGENT BASIS for long term prognosis and patient satisfaction

No. of Pages : 11 No. of Claims : 3

(12) PATENT APPLICATION PUBLICATION
(21) Application No.202111026925 A
(19) INDIA
(22) Date of filing of Application :16/06/2021
(43) Publication Date : 16/07/2021

(54) Title of the invention : AI AND IOT BASED SMART DAIRY FARM WITH HIGH-QUALITY MILK PRODUCTIVITY

(51) International classification	:G06Q0050020000, A47J0031440000, H04L0029080000, A23C0009152000, A23C0009142000
(31) Priority Document No	:NA
(32) Priority Date	:NA
(33) Name of priority country	:NA
(86) International Application No	:NA
Filing Date	:NA
(87) International Publication No	: NA
(61) Patent of Addition to Application Number	:NA
Filing Date	:NA
(62) Divisional to Application Number	:NA
Filing Date	:NA

(71)**Name of Applicant :**
1)Dr. Vinayendra Mani Tripathi
Address of Applicant :Professor, Department of Commerce, Graphic Era Hill University, Dehradun. Uttarakhand India
2)Dr. Raghvendra Subramanya
3)Dr.P.Ganapathi
4)Dr. Ganesh.P
5)Dr. Chandragowda M
6)Mr.Syed Mahaboob
7)Dr. Ambica Prakash Mani
8)Mr Nishant Chaturvedi
9)Mrs.Manisha Sarwaliya
10)Mrs.P Ajitha
11)Mr. Vasudendra H K
12)Mr Bharath M N
(72)**Name of Inventor :**
1)Dr. Vinayendra Mani Tripathi
2)Dr. Raghvendra Subramanya
3)Dr.P.Ganapathi
4)Dr. Ganesh.P
5)Dr. Chandragowda M
6)Mr.Syed Mahaboob
7)Dr. Ambica Prakash Mani
8)Mr Nishant Chaturvedi
9)Mrs.Manisha Sarwaliya
10)Mrs.P Ajitha
11)Mr. Vasudendra H K
12)Mr Bharath M N

(57) Abstract :
The Internet of Things (IoT) and data-driven strategies are expanding the possibilities for smart dairying. Milk consumption is expanding inexorably due to the world's growing population. Dairy products employ more people in industrialized nations than in underdeveloped nations. Better technical solutions for increasing milk supply are necessary to meet this rising demand for milk products. It is conceivable that IoT and other AI approaches may assist a farmer in overcoming several traditional agricultural obstacles and increasing high-quality milk output.

No. of Pages : 25 No. of Claims : 5

(12) PATENT APPLICATION PUBLICATION
(19) INDIA
(22) Date of filing of Application :16/06/2021
(21) Application No.202111026936 A
(43) Publication Date : 16/07/2021

(54) Title of the invention : VEHICLE DRIVER MONITORING SYSTEM USING DEEP LEARNING

(51) International classification	:G06K0009000000, G05D0001000000, G06F0003010000, A61B0003113000, A61B0005180000
(31) Priority Document No	:NA
(32) Priority Date	:NA
(33) Name of priority country	:NA
(86) International Application No	:NA
Filing Date	:NA
(87) International Publication No	: NA
(61) Patent of Addition to Application Number	:NA
Filing Date	:NA
(62) Divisional to Application Number	:NA
Filing Date	:NA

(71)**Name of Applicant :**
1)ASHISH KUMAR PANDEY
Address of Applicant :Assistant Professor, Department of CSE, Institute of Engineering & Technology, Dr. Rammanohar Lohia Avadh University, Ayodhya Uttar Pradesh India
2)Dr. RAJA SARATH KUMAR BODDU
3)Dr. NITESH KUMAR DIXIT
4)Ms. SANGEETA SINGH
5)Mr. DILIP KUMAR
6)Mr. SUBHASH YADAV
7)Mr. SATYAJEET
8)Dr. DEEPAK KUMAR VERMA
9)Ms. NL SOWJANYA CHERUKUPALLI
10)Mrs. N SARANYA CHERUKUPALLI
11)Mr. SHASHI KANT GUPTA
12)Mr. D SARAVANAN
(72)**Name of Inventor :**
1)ASHISH KUMAR PANDEY
2)Dr. RAJA SARATH KUMAR BODDU
3)Dr. NITESH KUMAR DIXIT
4)Ms. SANGEETA SINGH
5)Mr. DILIP KUMAR
6)Mr. SUBHASH YADAV
7)Mr. SATYAJEET
8)Dr. DEEPAK KUMAR VERMA
9)Ms. NL SOWJANYA CHERUKUPALLI
10)Mrs. N SARANYA CHERUKUPALLI
11)Mr. SHASHI KANT GUPTA
12)Mr. D SARAVANAN

(57) Abstract :
Driver monitoring has emerged for advanced driving aid and autonomous driving systems as a critical necessity. We propose an IR camera-based driver monitoring system with this breakthrough in real-time. Chef tracking, gaze tracking, eye state analysis blink rate, blink length, eye open/close, all of which may be employed in vehicle safety applications such as distraction from driving and driver sleep detection, are basic driver monitoring capabilities. We are proposing an innovative idea to build all these modules with deep learning, which has enhanced the robustness of the solution to diverse ethnicity, gender, lighting circumstances and occlusions.

No. of Pages : 25 No. of Claims : 10

(12) PATENT APPLICATION PUBLICATION
(21) Application No.202111026981 A
(19) INDIA
(22) Date of filing of Application :16/06/2021
(43) Publication Date : 16/07/2021

(54) Title of the invention : CLOUD NATIVE SERVER-LESS WARRANTY SYNCHRONISATION, PAPERLESS AND EASE OF MANAGEMENT FOR COMMON HOUSE APPLIANCES VIA LASER ETCHED QR/BAR/DATA MATRIX

(51) International classification	:G06Q0030000000, G06K0007100000, G06F0011070000, C08F0002440000, G06Q0020380000
(31) Priority Document No	:NA
(32) Priority Date	:NA
(33) Name of priority country	:NA
(86) International Application No	:NA
Filing Date	:NA
(87) International Publication No	: NA
(61) Patent of Addition to Application Number	:NA
Filing Date	:NA
(62) Divisional to Application Number	:NA
Filing Date	:NA

(71)**Name of Applicant :**
1)Dr. Hitesh Kumar Sharma
Address of Applicant :Dept. of Cybernetics, School of Computer Science, University of Petroleum and Energy Studies, Dehradun Uttarakhand India
2)Mr. Dibyasom Puhan
3)Mr. Saksham Lamba
4)Dr. Jagdish Chanda Patni
5)Mr. Vivudh Fore
6)Mr. Gorav Kumar Malik
7)Mr. Om Prakash Pal
8)Mr. Ashish Nainwal
9)Mr. Amrish
(72)**Name of Inventor :**
1)Dr. Hitesh Kumar Sharma
2)Mr. Dibyasom Puhan
3)Mr. Saksham Lamba
4)Dr. Jagdish Chanda Patni
5)Mr. Vivudh Fore
6)Mr. Gorav Kumar Malik
7)Mr. Om Prakash Pal
8)Mr. Ashish Nainwal
9)Mr. Amrish

(57) Abstract :
Alternative methods can provide a less feature full solution. One workaround would be to use available barcode scanning mobile applications, but they can™t read from the metallic surface, because they can™t compensate for the metallic glare, our proposed solution targets these scenarios and uses spatial-information restoring algorithms to process images having metallic glare. The beneficiaries of this solution are (but not limited to). Entire customer base buying any electrical device base that comes with warranty. (Scanning the device via their app will register the device against warranty, redirect to quick start manual, synchronise records across seller & manufacturer database with 0 requirement of paperwork.). Sellers of electrical devices. (They don™t need to maintain paperwork and invoice copies for letting the manufacturer know about the sale of the product, as it will be instantly added to the database via this cloud app.). Manufacturers of electrical devices. (Ambiguity regarding product-sale, warranty-claim, and limitations set due to inclusion of paperwork would be resolved due to the synchronised approach of this cloud-based solution.

No. of Pages : 17 No. of Claims : 4

(12) PATENT APPLICATION PUBLICATION
(21) Application No.202111027071 A
(19) INDIA
(22) Date of filing of Application :17/06/2021
(43) Publication Date : 16/07/2021

(54) Title of the invention : ANTIMICROBIAL, ANTIVIRAL AND FLUID REPELLANT TEXTILE AND METHOD OF PREPARATION THEREOF

(51) International classification	:D06M0016000000, C08K0005000000, A01N0033120000, D06M0015277000, D06M0015263000	
(31) Priority Document No	:NA	
(32) Priority Date	:NA	
(33) Name of priority country	:NA	
(86) International Application No	:NA	
Filing Date	:NA	
(87) International Publication No	: NA	
(61) Patent of Addition to Application Number	:NA	
Filing Date	:NA	
(62) Divisional to Application Number	:NA	
Filing Date	:NA	

(71)**Name of Applicant :**
1)DR. VARINDER GARG
Address of Applicant :Principal Investigator, Centre for Innovation and Bio-Design (CIBioD), PGIMER, Sector 12, Chandigarh-160012 India. R/O # 3334, Sector 24 D, Chandigarh, India. Chandigarh India
2)DR. HARISH KUMAR
3)DR. SURINDER S. RANA
4)SAMVIT RAJGOPALAN
(72)**Name of Inventor :**
1)SHIVEK GUPTA
2)DR. VIVEK LAL
3)DR. MANISH MODI
4)DR. MANOJ GOYAL
5)DR. PRAKAMYA GUPTA

(57) Abstract :
The present disclosure relates to an antimicrobial, antiviral and fluid repellant textile and method of preparation thereof. The said textile material combines 3 finishes viz., antiviral, antimicrobial, fluid repellant to create a textile which gives overall protection to users from spills, bacteria, molds, algae and virus. This has been achieved by optimizing the quantities of chemical compounds such that they are covalently bonding to the textile material providing upto 99.9% reduction in virus, bacterial and other pathogen growth and is also non- toxic and ecofriendly. Moreover, said textile is breathable, autoclavable, and retains 99.9 % of antiviral, antimicrobial and fluid repellant effect after 80-90 subsequent washings. Further textile of present invention has antistatic finish and also provide protection against any kind of liquid spills and body fluids etc.

No. of Pages : 25 No. of Claims : 9

(12) PATENT APPLICATION PUBLICATION
(21) Application No.202111027089 A
(19) INDIA
(22) Date of filing of Application :17/06/2021
(43) Publication Date : 16/07/2021

(54) Title of the invention : HAND-HELD UV LIGHT SANITIZER

(51) International classification	:G06K0009000000, H04N0005232000, G06K0009320000, A61B0003120000, A61B0001267000
(31) Priority Document No	:NA
(32) Priority Date	:NA
(33) Name of priority country	:NA
(86) International Application No	:NA
Filing Date	:NA
(87) International Publication No	: NA
(61) Patent of Addition to Application Number	:NA
Filing Date	:NA
(62) Divisional to Application Number	:NA
Filing Date	:NA

(71)**Name of Applicant :**
1)ANVEKAR, DINESH KASHINATH
Address of Applicant :19, HALCYON DEFENCE ENCLAVE, BAGALUR CROSS, SATHNUR, BENGALURU 562149 KARNATAKA, INDIA Karnataka India
2)RAJUK, VENUGOPAL KUPPANNA
3)SHAHABADKAR, RAMESH
4)SHAHABADKAR, KRUTIKA RAMESH
5)YADAHALLI, RAVI MALLESHAPPA
6)KUMAR, NARENDRA
7)JADHAV, PRAKASH
8)BELGAONKAR, SANJAY MOHAN
9)SIDDARAJU, NANDINI KANDAVARA
10)MUNIRATHNAM, LAKSHMINARAYANA
11)KIRESUR, MANJULA VASANT
12)NAGARAJ, SRIDHAR
(72)**Name of Inventor :**
1)ANVEKAR, DINESH KASHINATH
2)RAJUK, VENUGOPAL KUPPANNA
3)SHAHABADKAR, RAMESH
4)SHAHABADKAR, KRUTIKA RAMESH
5)YADAHALLI, RAVI MALLESHAPPA
6)KUMAR, NARENDRA
7)JADHAV, PRAKASH
8)BELGAONKAR, SANJAY MOHAN
9)SIDDARAJU, NANDINI KANDAVARA
10)MUNIRATHNAM, LAKSHMINARAYANA
11)KIRESUR, MANJULA VASANT
12)NAGARAJ, SRIDHAR

(57) Abstract :
A hand-held UV light sanitizer 200 for sanitizing a surface 230 safely by throwing the UV light on them from a UV light tube 380 mounted within a cuboid enclosure 255 is disclosed. The sanitizer 200 can be held with one hand while sanitizing surfaces. The distance of the UV light source from the surface 230 being sanitized is measured by using ultra-sonic sensors 350, 370. A camera 290 on the top of the sanitizer 200 is used along with image processing capability of a micro-controller 750 to find if any human face is recognized. The UV light is switched on only if the distance is less than a predetermined ˜on™ distance value, and a human face is found in the image seen by the camera 290. The UV light is switched off if the distance is more than a predetermined ˜off™ distance value, or a human face is not found in the image seen by the camera 290. While being used, two flaps 240, 250 move out to the sides exposing the UV light tube 280, 330, and prevent any UV light reflected from the surface 230 from going towards the user. In the retracted position, the flaps 240 (610), 250 (620) cover the UV light tube 380 and protect it from physical damage.

No. of Pages : 20 No. of Claims : 8

(12) PATENT APPLICATION PUBLICATION
(21) Application No.202111027107 A
(19) INDIA
(22) Date of filing of Application :17/06/2021
(43) Publication Date : 16/07/2021

(54) Title of the invention : APPARATUS AND METHOD FOR AN ELECTRICAL SWITCHING

(51) International classification	:H01R0025140000, H01R0031020000, H01R0013680000, E21B0043080000, H01R0025000000
(31) Priority Document No	:NA
(32) Priority Date	:NA
(33) Name of priority country	:NA
(86) International Application No	:NA
Filing Date	:NA
(87) International Publication No	: NA
(61) Patent of Addition to Application Number	:NA
Filing Date	:NA
(62) Divisional to Application Number	:NA
Filing Date	:NA

(71)**Name of Applicant :**
1)PIYUSH YADAV
Address of Applicant :Block 4 Flat 6, Sector-1, Pushp Vihar, New Delhi-110017, India Delhi India
2)N. PRIYA
3)Dr. P. NARASIMMAN
4)Dr. MEENA AGRAWAL
5)SAGARIKA KHATUA
6)JASPREET SINGH
7)SANDESH AGARWAL
(72)**Name of Inventor :**
1)PIYUSH YADAV
2)N. PRIYA
3)Dr. P. NARASIMMAN
4)Dr. MEENA AGRAWAL
5)SAGARIKA KHATUA
6)JASPREET SINGH
7)SANDESH AGARWAL

(57) Abstract :
An electrical switch board (100), the board (100) comprising: a main body (102) comprising: continuous vertical slots (106a-106n) extending linearly along a length of the main body (102) configured to accept pins (120a-120q) of a plug (122); diagonal slots (108a-108m) provided at each corner of the main body (102) between adjacent vertical slots configured to accept the pins (120a-120q) of the plug (122); an Integrated Circuit (IC) board (104) comprising conducting tracks (126a-126r) configured to provide an electrical current to the pins (120a-120q) of the plug (122), wherein the conducting tracks (126a-126r) are connected to the IC board (104) such that the conducting tracks (126a-126r) are positioned vertically below the vertical slots (106a-106n) and the diagonal slots (108a-108m); and a fuse (110) connected in series with the IC board (104), wherein the fuse (110) is configured to break an input current supply when a predefined temperature is reached.

No. of Pages : 26 No. of Claims : 10

(12) PATENT APPLICATION PUBLICATION
(21) Application No.202111027192 A
(19) INDIA
(22) Date of filing of Application :18/06/2021
(43) Publication Date : 16/07/2021

(54) Title of the invention : AN AUTONOMOUS SECURE METHOD TO CONTROL COUNTERFEITING IN THE AVIATION SUPPLY CHAIN USING BLOCKCHAIN TECHNOLOGY

(51) International classification	:H04L0009320000, G06Q0010060000, G06Q0010080000, G06Q0030000000, G06Q0030060000
(31) Priority Document No	:NA
(32) Priority Date	:NA
(33) Name of priority country	:NA
(86) International Application No	:NA
Filing Date	:NA
(87) International Publication No	: NA
(61) Patent of Addition to Application Number	:NA
Filing Date	:NA
(62) Divisional to Application Number	:NA
Filing Date	:NA

(71)**Name of Applicant :**
1)Md. Arif
Address of Applicant :MBA, NITIE Mumbai Maharashtra, India Maharashtra India
2)Dr. Mohd Adil
3)Dr. Asad Ullah
(72)**Name of Inventor :**
1)Md. Arif
2)Dr. Mohd Adil
3)Dr. Asad Ullah

(57) Abstract :
Transparency in the aviation supply chains is crucial to resolve counterfeiting and other challenges currently faced by the industry. The issue of counterfeit spare parts in the aviation supply chain is a serious challenge for the aviation industry which directly impacts the certificate of airworthiness index (COA). In addition, there are several other challenges such as lower resale worth, risk to human life linked to counterfeit spare parts. This paper outlines such issues which arise primarily due to improper handling of record-keeping ledgers among the network participants which brings a lack of traceability of the aircraft spare parts. This paper reveals that the existing practices for tracing and tracking aircraft spare parts fall short in providing confidence in the authenticity and originality of the aircraft parts. To overcome such problems, this paper implements a Blockchain-based permissioned network using Hyperledger Fabric Blockchain projects to bring transparency to the aviation supply chain to develop a secure, trusted environment and synergy among the participating organizations across aviation value chain.

No. of Pages : 13 No. of Claims : 5

(12) PATENT APPLICATION PUBLICATION
(21) Application No.202111027200 A
(19) INDIA
(22) Date of filing of Application :18/06/2021
(43) Publication Date : 16/07/2021

(54) Title of the invention : A novel method to develop a Phase-change heat storage building panels

(51) International classification	:F28D0020020000, C09K0005060000, F24S0060000000, A61K0009500000, F24S0020610000
(31) Priority Document No	:NA
(32) Priority Date	:NA
(33) Name of priority country	:NA
(86) International Application No	:NA
Filing Date	:NA
(87) International Publication No	: NA
(61) Patent of Addition to Application Number	:NA
Filing Date	:NA
(62) Divisional to Application Number	:NA
Filing Date	:NA

(71)**Name of Applicant :**
1)Dr. Pardeep Kumar
Address of Applicant :Associate Professor Department: Mechanical Engineering College: Meerut Institute of Engineering and Technology, N.H. 58, Delhi-Roorkee Highway, Baghpat Bypass Road Crossing, Meerut, Uttar Pradesh 250005 Uttar Pradesh India
2)Dr. Vipin Kumar Sharma
3)Dr. Ravinder Singh Joshi
4)Dr. Tushar Jain
5)Dr. Saumya Shah
(72)**Name of Inventor :**
1)Dr. Pardeep Kumar
2)Dr. Vipin Kumar Sharma
3)Dr. Ravinder Singh Joshi
4)Dr. Tushar Jain
5)Dr. Saumya Shah

(57) Abstract :
The discovery is a phase transformation heat storing, light, and temperature regulation structure panel that includes an encased accommodation with at least 2 translucent to visible light walls delineating as a minimum one approximate space is occupied with a liquid-solid phase-change heat-storage substantial that is dramatically translucent to visible light in both solid and liquid phase, diffuses heat although in solid phase, and is transparent in the visible in both solid and liquid phase. This discovery also includes a technique for controlling day light and temperature, as well as nighttime temperature, in housing units and plant fences using the invention's displays.

No. of Pages : 9 No. of Claims : 3

(12) PATENT APPLICATION PUBLICATION
(19) INDIA
(22) Date of filing of Application :18/06/2021
(21) Application No.202111027214 A
(43) Publication Date : 16/07/2021

(54) Title of the invention : SYSTEM AND METHOD FOR MICROBIAL TRANSFORMATION OF LIGNIN DERIVED PHENOLIC COMPOUNDS INTO CIS, CIS-MUCONIC ACID

(51) International classification	:C12N0009020000, C12P0007440000, C12R0001400000, C07G0001000000, C08H0007000000
(31) Priority Document No	:NA
(32) Priority Date	:NA
(33) Name of priority country	:NA
(86) International Application No	:NA
Filing Date	:NA
(87) International Publication No	: NA
(61) Patent of Addition to Application Number	:NA
Filing Date	:NA
(62) Divisional to Application Number	:NA
Filing Date	:NA

(71)**Name of Applicant :**
1)ESHA DWIVEDI
Address of Applicant :DEPARTMENT OF BIOCHEMICAL ENGINEERING, SCHOOL OF CHEMICAL TECHNOLOGY, HARCOURT BUTLER TECHNICAL UNIVERSITY, KANPUR, INDIA. Uttar Pradesh India
2)DR. LALIT KUMAR SINGH
(72)**Name of Inventor :**
1)ESHA DWIVEDI
2)DR. LALIT KUMAR SINGH

(57) Abstract :
The present invention relates to a system and method of biocatalytic conversion of biomass derived lignin into cis, cis-muconic acid (ccMA). The method comprises steps of digestion of sugar cane bagasse using sulfuric acid, followed by treatment with potassium permanganate to obtain lignin hydrolysate which comprises one or more phenolic compounds. The Pseudomonas putida MTCC 1194 can be harvested in presence of the obtained lignin hydrolysate to convert phenolic compounds into ccMA. The converted ccMA can be extracted from microbial cell, after cell lysis using lysis buffer.

No. of Pages : 28 No. of Claims : 10

(12) PATENT APPLICATION PUBLICATION
(21) Application No.202111027238 A
(19) INDIA
(22) Date of filing of Application :18/06/2021
(43) Publication Date : 16/07/2021

(54) Title of the invention : SYSTEM OF A SMART IOT-BASED AUTOMATIC HEALTHCARE AND MONITORING

(51) International classification	:A61B0005000000, G06Q0050220000, H04L0029080000, G16H0010600000, A61B0005010000
(31) Priority Document No	:NA
(32) Priority Date	:NA
(33) Name of priority country	:NA
(86) International Application No	:NA
Filing Date	:NA
(87) International Publication No	: NA
(61) Patent of Addition to Application Number	:NA
Filing Date	:NA
(62) Divisional to Application Number	:NA
Filing Date	:NA

(71)**Name of Applicant :**
1)Dr. Satendar Singh
Address of Applicant :Associate Professor, School of Business Studies, Sharda University, Greater Noida Uttar Pradesh India
2)Dr. Sarita Chaudhary
3)Dr. Kasturi Sahay
4)Dr. Hitesh Kumar Dewangan
(72)**Name of Inventor :**
1)Dr. Satendar Singh
2)Dr. Sarita Chaudhary
3)Dr. Kasturi Sahay
4)Dr. Hitesh Kumar Dewangan

(57) Abstract :
The present invention relates to a smart IoT-based automatic healthcare and monitoring system. More particularly, but not specifically, the invention provides a system and method for providing automatic health monitoring and diagnosis of the patients using IoT sensor modules and devices interconnected to cloud computing environment through wireless modes. Furthermore, the present invention relates to a system and the apparatus for monitoring, self-quantification and recording patient™s health condition anytime and anywhere through a cloud database thereof. Whereupon, this stored data will then available and accessed by the doctors or caregivers for analyzing the health criticality and prescribing required medication thereof.

No. of Pages : 14 No. of Claims : 7

(12) PATENT APPLICATION PUBLICATION
(21) Application No.202111027480 A
(19) INDIA
(22) Date of filing of Application :18/06/2021
(43) Publication Date : 16/07/2021

(54) Title of the invention : NOVEL COMPLEX OF ZINC FOR BIO-MEDICINAL APPLICATION AND ITS SYNTHESIS THEREOF

(51) International classification	:A61P0025280000, C07D0217240000, C07F0015000000, C07D0239340000, C07F0003000000
(31) Priority Document No	:NA
(32) Priority Date	:NA
(33) Name of priority country	:NA
(86) International Application No	:NA
Filing Date	:NA
(87) International Publication No	: NA
(61) Patent of Addition to Application Number	:NA
Filing Date	:NA
(62) Divisional to Application Number	:NA
Filing Date	:NA

(71)**Name of Applicant :**
1)Dr. Arvind Kumar
Address of Applicant :Department of Chemistry, Narain P. G. College, Shikohabad, U. P. India Uttar Pradesh India
(72)**Name of Inventor :**
1)Dr. Arvind Kumar
2)Mr. Nagendra Singh
3)Mr. Jeetpal Singh
4)Dr. Om Kumari
5)Dr. Kavita Yadav
6)Dr. Ravi Kant

(57) Abstract :
The present invention relates to novel complex of zinc for bio-medicinal application and its synthesis thereof. The present invention concerns with the design and synthesis of a novel heterocyclic mixed ligand complex and its characterization by melting point, elemental and spectral techniques. The synthesized compound show prominent biomedicine activity.

No. of Pages : 21 No. of Claims : 4

(12) PATENT APPLICATION PUBLICATION
(21) Application No.202111027550 A
(19) INDIA
(22) Date of filing of Application :19/06/2021
(43) Publication Date : 16/07/2021

(54) Title of the invention : MACHINE LEARNING BASED SMART GRID POWER SYSTEM INTEGRATED WITH WIRELESS COMMUNICATION NETWORKS

(51) International classification	:G06Q0050060000, G06N0020000000, H04L0029080000, G06K0009320000, G01V0001000000
(31) Priority Document No	:NA
(32) Priority Date	:NA
(33) Name of priority country	:NA
(86) International Application No	:NA
Filing Date	:NA
(87) International Publication No	: NA
(61) Patent of Addition to Application Number	:NA
Filing Date	:NA
(62) Divisional to Application Number	:NA
Filing Date	:NA

(71)**Name of Applicant :**
1)Astha Singh Kushwaha
Address of Applicant :Assistant professor, Department of Electronics and Communication Engineering IET, Dr. Rammanohar Lohia Avadh University, Ayodhya Uttar Pradesh Uttar Pradesh India
2)Dr J P Sridhar
3)Divya R
4)Dr. Asha S Manek
5)Mr. Ronald Chiwariro
6)Shikha Kuchhal
7)Dr. Debdutta Barman Roy
8)G Johncy
9)Ashish Suryavanshi
10)Raghunandan Singh Baghel
11)Ms. Neha Singh
12)Mahesh Kumar A S
(72)**Name of Inventor :**
1)Astha Singh Kushwaha,Dr. Rammanohar Lohia Avadh University
2)Dr J P Sridhar,SJB Institute of Technology
3)Divya R,PSG Institute of Technology and Applied Research
4)Dr. Asha S Manek,RV Institute of Technology and Management
5)Mr. Ronald Chiwariro,Jain University
6)Shikha Kuchhal,Jamia Millia Islamia
7)Dr. Debdutta Barman Roy,Brainware University
8)G Johncy,St.Xavier's Catholic College of Engineering
9)Ashish Suryavanshi,Vikram University
10)Raghunandan Singh Baghel,Vikram University
11)Ms. Neha Singh,Vikram University
12)Mahesh Kumar A S,PES College of Engineering

(57) Abstract :
In the current era, power grids are transformed into Smart Grids raising several challenges as penetration of smart devices in the existing power systems. Challenges are also posed on Information and Communication Technology due to these changes as it has to support services related to Smart Grids. In Smart Grid, power systems are integrated with Information and Communication Technology which has enabled distributed controls and real time services by the fusion of these technologies. In this invention, architecture of Smart Grid testbed is designed and developed by integrating algorithms of Artificial intelligence and real world wireless communication systems such that real time design requirements of Smart Grid testbed is met by this reconfigurable framework with stacking of full protocol in MAC layers and PHY layers. The proposed architecture has the reconfiguration property based on the network of wireless communication and advanced technologies of ICT which includes Machine Learning algorithm. A novel Smart Grid design is addressed with cross system interfacing that shows greater potential for evaluating power systems especially Smart Grids.

No. of Pages : 11 No. of Claims : 6

(12) PATENT APPLICATION PUBLICATION
(21) Application No.202111027585 A
(19) INDIA
(22) Date of filing of Application :20/06/2021
(43) Publication Date : 16/07/2021

(54) Title of the invention : A SYSTEM FOR CAPACITY ESTIMATION IN BATTERY USING MACHINE LEARNING

(51) International classification	:G06N0003040000, G06N0003080000, G05B0013020000, G06N0003000000, A61B0005040200
(31) Priority Document No	:NA
(32) Priority Date	:NA
(33) Name of priority country	:NA
(86) International Application No	:NA
Filing Date	:NA
(87) International Publication No	: NA
(61) Patent of Addition to Application Number	:NA
Filing Date	:NA
(62) Divisional to Application Number	:NA
Filing Date	:NA

(71)**Name of Applicant :**
1)GRAPHIC ERA (DEEMED TO BE) UNIVERSITY
Address of Applicant :566/6, Bell Road, Clement Town, Dehradun 248002, Uttarakhand, India Uttarakhand India
2)GRAPHIC ERA HILL UNIVERSITY, DEHRADUN CAMPUS
(72)**Name of Inventor :**
1)Dr. Vrince Vimal
2)Bhaskar Nautiyal
3)Mrs. Sonam Kapil

(57) Abstract :
The invention discloses a system 100 for capacity estimation in a battery using machine learning techniques. The method of estimating capacity of a battery using machine learning techniques comprising: retrieving a plurality of input parameters from a plurality of batteries to train a deep neural network; logging, by said data acquisition unit 203, said plurality of input parameters into said memory using a data acquisition card; minimizing, by said data acquisition unit 203, a data dimension of said plurality of input parameters using a Principal Component Analysis (PCA); training, by a processing unit 204, said deep neural network using the set of linearly un-correlated features of the plurality of input parameters using robust backpropagation method; and minimizing, by said processing unit 204, an error in training of the deep neural network using swiss based activation function to improve efficiency of said system 100.

No. of Pages : 30 No. of Claims : 8

(12) PATENT APPLICATION PUBLICATION
(21) Application No.202111027588 A
(19) INDIA
(22) Date of filing of Application :21/06/2021
(43) Publication Date : 16/07/2021

(54) Title of the invention : A SYSTEM AND METHOD FOR CLEANING AND SANITIZING LARGE UTENSILS USING ML INTERFACE

(51) International classification	:G06N0020000000, A47L0015000000, A47L0015420000, B08B0009032000, A61L0002180000
(31) Priority Document No	:NA
(32) Priority Date	:NA
(33) Name of priority country	:NA
(86) International Application No	:NA
Filing Date	:NA
(87) International Publication No	: NA
(61) Patent of Addition to Application Number	:NA
Filing Date	:NA
(62) Divisional to Application Number	:NA
Filing Date	:NA

(71)**Name of Applicant :**
1)Ms. Esha Tripathi
Address of Applicant :Assistant Professor Information Technology Pranveer Singh Institute of Technology, Kanpur, Uttar Pradesh Dr. A.P.J. Abdul Kalam Technical University, Lucknow Uttar Pradesh India
2)Dr.G.Madhavi
3)Mr.Gaurav Kumar
4)Dr. Jayavani Vankara
5)Mr. Bhupati
6)J.Rajasekhar
7)Mr.Mahima Shanker Pandey
8)Digvijay Singh
9)Dr. Yogesh Misra
10)Thella.Sunitha
(72)**Name of Inventor :**
1)Ms. Esha Tripathi
2)Dr.G.Madhavi
3)Mr.Gaurav Kumar
4)Dr. Jayavani Vankara
5)Mr. Bhupati
6)J.Rajasekhar
7)Mr.Mahima Shanker Pandey
8)Digvijay Singh
9)Dr. Yogesh Misra
10)Thella.Sunitha

(57) Abstract :
The present invention discloses a system for cleaning and sanitizing large utensils using machine learning and artificial intelligence interfaces. The present invention includes, but not limited to, a plurality of sprayers for providing supply of water, liquid detergent and sanitizing agent as per the instruction provided by a processing unit. Further, the processing unit is provided with artificial intelligence and machine learning interfaces to validate the flow of all supplied articles water, liquid detergent and sanitizing agent. In operation, a flow of water is directed to the dishwasher. A sanitizing agent is added to the water in the reservoir to form a sanitizing solution which is circulated throughout the enclosure. After the sanitizing process, the utensil is drained in a separate reservoir and the reservoir is filled with fresh water for rinsing the utensil once again.

No. of Pages : 21 No. of Claims : 8

(12) PATENT APPLICATION PUBLICATION
(21) Application No.202111027591 A
(19) INDIA
(22) Date of filing of Application :20/06/2021
(43) Publication Date : 16/07/2021

(54) Title of the invention : NOVEL MIXED LIGAND COMPLEX OF COPPER AS ANTIMICROBIAL AND ITS SYNTHESIS THEREOF

(51) International classification	:C07K0014520000, C22C0009040000, C07D0217240000, A61M0001160000, C07C0031200000	(71)**Name of Applicant :** **1)Dr. Arvind Kumar** Address of Applicant :Department of Chemistry, Narain P. G. College, Shikohabad, U. P. India Uttar Pradesh India (72)**Name of Inventor :** **1)Dr. Arvind Kumar** **2)Mr. Nagendra Singh** **3)Mr. Jeetpal Singh** **4)Dr. Manoj Kumar** **5)Dr. Shalini Sharma** **6)Dr. Ravi Kant**
(31) Priority Document No	:NA	
(32) Priority Date	:NA	
(33) Name of priority country	:NA	
(86) International Application No	:NA	
Filing Date	:NA	
(87) International Publication No	: NA	
(61) Patent of Addition to Application Number	:NA	
Filing Date	:NA	
(62) Divisional to Application Number	:NA	
Filing Date	:NA	

(57) Abstract :
The present invention relates to novel mixed ligand complex of copper as antimicrobial and its synthesis thereof. The present invention concerned with the synthesis of a novel heterocyclic mixed ligand complex of copper and its characterization by melting point, elemental and spectral techniques. The synthesized compound show prominent antimicrobial activity.

No. of Pages : 21 No. of Claims : 4

(12) PATENT APPLICATION PUBLICATION
(21) Application No.202111027614 A
(19) INDIA
(22) Date of filing of Application :21/06/2021
(43) Publication Date : 16/07/2021

(54) Title of the invention : SYSTEM AND METHOD FOR IOT BASED CONTROLLING AND MONITORING OF SMART CITY

(51) International classification	:H04L0012240000, H04N0005232000, H04L0029080000, H04L0012280000, H04L0012260000	(71)**Name of Applicant :** **1)MR. PRATEEK SINGHAL** Address of Applicant :2/111, JANKIPURAM VISTAR SECTOR-2, SITAPUR ROADS, LUCKNOW, UTTAR PRADESH, INDIA 226031 Uttar Pradesh India
(31) Priority Document No	:NA	**2)MS. SARIKA TYAGI**
(32) Priority Date	:NA	(72)**Name of Inventor :**
(33) Name of priority country	:NA	**1)MR. PRATEEK SINGHAL**
(86) International Application No	:NA	**2)MS. SARIKA TYAGI**
Filing Date	:NA	**3)PROF. SHEO PRASAD SHUKLA**
(87) International Publication No	: NA	**4)PROF. ANURAG TRIPATHI**
(61) Patent of Addition to Application Number	:NA	**5)MR. NILAY SHUKLA**
Filing Date	:NA	**6)MS. NISHTHA SHUKLA**
(62) Divisional to Application Number	:NA	**7)DR. SARIKA SHRIVASTAVA**
Filing Date	:NA	**8)MR. SHOBHIT MANI TIWARI**
		9)MR. SURYA BHSHAN DUBEY

(57) Abstract :
The present invention provides a system and method pertaining to Internet of Things (IoT) based water logging status notification. The image sensor captures image of a marker that indicates water level at a specific location. The captured image is segmented, processed and then compared with images indicating threshold level, beyond which waterlogging is determined. Determined waterlogging status along with marker location can be transmitted, over a communication network, to electronic devices associated with concerned authorities.

No. of Pages : 29 No. of Claims : 10

(12) PATENT APPLICATION PUBLICATION
(21) Application No.202111027615 A
(19) INDIA
(22) Date of filing of Application :21/06/2021
(43) Publication Date : 16/07/2021

(54) Title of the invention : DEEP LEARNING BASED FULL-FILED POLARIZATION SENSITIVE OPTICAL COHERENCE TOMOGRAPHIC DEVICE FOR QUANTITATIVE IMAGING OF BIOLOGICAL CELLS USING SINGLE CAMERA

(51) International classification	:A61B0005000000, G01B0009020000, A61B0003100000, G01N0021470000, G01N0021230000	(71)**Name of Applicant :** **1)VISHAL SRIVASTAVA** Address of Applicant :B-207, EIED. TIET PATIALA, PUNJAB, INIDA Punjab India **2)ANURAG SOHANE** **3)GYANENDRA SINGH** **4)SAUTAMI BASU** **5)BABITA DHIMAN** **6)RAVINDER AGARWAL**
(31) Priority Document No	:NA	
(32) Priority Date	:NA	
(33) Name of priority country	:NA	
(86) International Application No	:NA	
Filing Date	:NA	
(87) International Publication No	: NA	(72)**Name of Inventor :** **1)VISHAL SRIVASTAVA** **2)ANURAG SOHANE** **3)GYANENDRA SINGH** **4)SAUTAMI BASU** **5)BABITA DHIMAN** **6)RAVINDER AGARWAL**
(61) Patent of Addition to Application Number	:NA	
Filing Date	:NA	
(62) Divisional to Application Number	:NA	
Filing Date	:NA	

(57) Abstract :
The present disclosure relates to a full-filed polarization sensitive optical coherence tomographic device to record vertical and horizontal polarization components. The system is based on a deep learning framework (R-GAN) and will be helpful in the simultaneous acquisition of sample reflectivity, birefringence retardance and birefringent axis orientation of the specimen from the phase recovered from the interference recorded by the single detector (CCD). R-GAN was used to prevent the collapse of the mode and the drawbacks of the standard GAN. This will reduce the system cost as well as increase the robustness of the system. The device comprises a charge-coupled device (CCD) camera and a single-detector based full-filed polarization sensitive optical coherence tomographic (FF-PS-OCT).

No. of Pages : 17 No. of Claims : 10

(12) PATENT APPLICATION PUBLICATION
(19) INDIA
(22) Date of filing of Application :21/06/2021
(21) Application No.202111027659 A
(43) Publication Date : 16/07/2021

(54) Title of the invention : SMART DATA MANAGEMENT SYSTEM USING BIG DATA

(51) International classification	:G06F0016182000, G06F0016270000, G06F0016245800, G06F0016245300, G06F0016220000
(31) Priority Document No	:NA
(32) Priority Date	:NA
(33) Name of priority country	:NA
(86) International Application No	:NA
Filing Date	:NA
(87) International Publication No	: NA
(61) Patent of Addition to Application Number	:NA
Filing Date	:NA
(62) Divisional to Application Number	:NA
Filing Date	:NA

(71)**Name of Applicant :**
1)Dr. NAVIN AHLAWAT
Address of Applicant :PROFESSOR DEPARTMENT OF COMPUTER APPLICATIONS SRM INSTITUTE OF SCIENCE AND TECHNOLOGY, DELHI-NCR CAMPUS, MODINAGAR, GHAZIABAD, UTTAR PRADESH 201204, INDIA Uttar Pradesh India
2)Prof. NITA H. SHAH
3)Dr. AJAY SINGH YADAV
4)Dr. SEEMA AGARWAL
5)Mr. MOHAMMED ABID
6)Dr. NITIN KUMAR
7)Dr. NIRMAL SHARMA
8)Dr. SHALINI SHARMA
9)Dr. SATISH KUMAR
10)Dr. A. GOVINDARAJAN
(72)**Name of Inventor :**
1)Dr. NAVIN AHLAWAT
2)Prof. NITA H. SHAH
3)Dr. AJAY SINGH YADAV
4)Dr. SEEMA AGARWAL
5)Mr. MOHAMMED ABID
6)Dr. NITIN KUMAR
7)Dr. NIRMAL SHARMA
8)Dr. SHALINI SHARMA
9)Dr. SATISH KUMAR
10)Dr. A. GOVINDARAJAN

(57) Abstract :
The quick improvement of data innovation throughout the last decade implies that information shows up in a wide scope of sensor information, tweets, photographs, crude information and unstructured information designs. With a particularly overpowering surge of data, current information the executives frameworks can't scale to this tremendous amount of crude, unstructured information Big Data, today. We show the essential ideas and plans of enormous information devices, calculations and procedures in the current investigation. We contrast the old style information mining calculations and the Big Data calculations by utilizing Hadoop/Map Reduce as the center adaptable calculation execution of Big Data. We carried out the K-implies and deduced calculations on a 5-hub Hadoop bunch with Hadoop/Map Reduce. We use MongoDB as an illustration to investigate NoSQL data sets for semi-organized, gigantic information scaling. At last, we show the exhibition of these two calculations between HDFS (Hadoop Distributed File System) and MongoDB information stockpiling.

No. of Pages : 30 No. of Claims : 7

(12) PATENT APPLICATION PUBLICATION
(21) Application No.202111027779 A
(19) INDIA
(22) Date of filing of Application :21/06/2021
(43) Publication Date : 16/07/2021

(54) Title of the invention : AN INTEGRATED MUSIC SYSTEM

(51) International classification	:G10H0001000000, G10H0001340000, G10H0007000000, G10H0001320000, A63B0071060000	(71)**Name of Applicant :** **1)Pritpal Singh** Address of Applicant :#9/6156, Pratap Street, Gandhi Nagar, Gandhi Nagar S.O Delhi India (72)**Name of Inventor :** **1)Pritpal Singh**
(31) Priority Document No	:NA	
(32) Priority Date	:NA	
(33) Name of priority country	:NA	
(86) International Application No	:NA	
Filing Date	:NA	
(87) International Publication No	: NA	
(61) Patent of Addition to Application Number	:NA	
Filing Date	:NA	
(62) Divisional to Application Number	:NA	
Filing Date	:NA	

(57) Abstract :
The present invention provides an integrated music system (102) configured to provide a change in the sound production by combining two musical instruments. The integrated music device (102) comprises a musical instrument (302) comprising a keyboard (306) having a plurality of keypads (308), a shruti box musical instrument (304), an airway channel beneath a surface of the musical instrument (302) and the shruti box musical instrument (304), and an air source (104) at a front side (106) of the integrated music device (102), wherein the air source (104) is configured to provide a continuous stream of air to the airway channel to generate a sound of specific tone in response to user input.

No. of Pages : 15 No. of Claims : 6

(12) PATENT APPLICATION PUBLICATION
(21) Application No.202111027869 A
(19) INDIA
(22) Date of filing of Application :22/06/2021
(43) Publication Date : 16/07/2021

(54) Title of the invention : OCCLUSAL POSITIONING DEVICE

(51) International classification	:A61C0019045000, A61C0011000000, A61C0011080000, A61C0011020000, A61C0019050000	(71)**Name of Applicant :** **1)Dr. Ashish Choudhary** Address of Applicant :Dept. of Prosthodontics and Crown & Bridge School of Dental Sciences Sharda University Uttar Pradesh India
(31) Priority Document No	:NA	**2)Dr. Mahinder Chauhan**
(32) Priority Date	:NA	**3)Dr. Ekta Choudhary**
(33) Name of priority country	:NA	**4)Dr. Shairy Vashist**
(86) International Application No	:NA	**5)Dr. Sakshi Sehgal**
Filing Date	:NA	(72)**Name of Inventor :**
(87) International Publication No	: NA	**1)Dr. Ashish Choudhary**
(61) Patent of Addition to Application Number	:NA	**2)Dr. Mahinder Chauhan**
Filing Date	:NA	**3)Dr. Ekta Choudhary**
(62) Divisional to Application Number	:NA	**4)Dr. Shairy Vashist**
Filing Date	:NA	**5)Dr. Sakshi Sehgal**

(57) Abstract :
Mean value articulators do not accept the face-bow transfer therefore recording the orientation of maxilla at a proper position is not possible. Chances of errors are high if the maxillary plane is not oriented and established according to the anthropological measurements of the patients and also, the Class III articulators are expensive.The specified equipment (Occlusal Positioning Device) will help in recording and transferring the orientation jaw relation which is not possible on existing mean value articulator. This reduces chances of error during teeth arrangement and enhances aesthetics.

No. of Pages : 9 No. of Claims : 2

(12) PATENT APPLICATION PUBLICATION
(21) Application No.202111028063 A
(19) INDIA
(22) Date of filing of Application :22/06/2021
(43) Publication Date : 16/07/2021

(54) Title of the invention : INFUSION METHOD IN MICRO CELL PATHY SYSTEM OF MEDICINE FOR IMPROVING SEVEN PATHOLOGY CONDITIONS

(51) International classification	:B29C0070540000, H04W0016320000, B81C0099000000, C04B0028020000, C12M0001320000	(71)**Name of Applicant :** **1)Dr. Prasanta Kumar Das** Address of Applicant :B9/36, Udaigiri apartment-2nd,Near Patanjali store, Amaltas Market,Sec-34,Noida,Dist-G.B Nagar,Uttar Pradesh, Uttar Pradesh India
(31) Priority Document No	:NA	(72)**Name of Inventor :**
(32) Priority Date	:NA	**1)Dr. Prasanta Kumar Das**
(33) Name of priority country	:NA	
(86) International Application No	:NA	
Filing Date	:NA	
(87) International Publication No	: NA	
(61) Patent of Addition to Application Number	:NA	
Filing Date	:NA	
(62) Divisional to Application Number	:NA	
Filing Date	:NA	

(57) Abstract :
The present invention relates to a method for improving seven pathological conditions by the infusion method. The present invention includes an infusion method involving micro cell pathy for improving gangrene and cancer. The present invention includes a process for the manufacturing of Micro cell pathy pills using the odic tincture. The manufacturing of Micro cell pathy globules by odic tincture is used for the treatment of seven pathology conditions. The Micro cell pathy method is used for the treatment of seven pathology conditions. The seven pathology conditions are stagnation, inflammation, pains and numbness, positive and negative fever, suppuration (growth of tumors), gangrene, and cancer.

No. of Pages : 19 No. of Claims : 9

(12) PATENT APPLICATION PUBLICATION
(21) Application No.202111028136 A
(19) INDIA
(22) Date of filing of Application :23/06/2021
(43) Publication Date : 16/07/2021

(54) Title of the invention : A METHOD FOR OPTIMIZATION AND CHARACTERIZATION OF EFINACONAZOLE TRANSFERSOMAL GEL FORMULATION

(51) International classification	:C07D0401060000, A61K0009000000, A61K0047100000, A61P0031100000, A61K0009060000
(31) Priority Document No	:NA
(32) Priority Date	:NA
(33) Name of priority country	:NA
(86) International Application No	:NA
Filing Date	:NA
(87) International Publication No	: NA
(61) Patent of Addition to Application Number	:NA
Filing Date	:NA
(62) Divisional to Application Number	:NA
Filing Date	:NA

(71)**Name of Applicant :**
1)Anjana Devi
Address of Applicant :Research Scholar, Adarsh Vijendra Institute of Pharmaceutical Sciences, Shobhit University Gangoh, Saharanpur, Uttar Pradesh Uttar Pradesh India
2)Dr.Himanshu chaurasia
3)Dr. Shikha Rangra chandel
4)Dr. Ashwani kumar
5)Neetu Rani
6)Brijesh Kumar
7)Mrs. Parveen verma
8)Dr. Vineet Mittal
9)Davinder Kumar
10)Sonia yadav
11)Dr. Peeush Singhal
(72)**Name of Inventor :**
1)Anjana Devi
2)Dr.Himanshu chaurasia
3)Dr. Shikha Rangra chandel
4)Dr. Ashwani kumar
5)Neetu Rani
6)Brijesh Kumar
7)Mrs. Parveen verma
8)Dr. Vineet Mittal
9)Davinder Kumar
10)Sonia yadav
11)Dr. Peeush Singhal

(57) Abstract :
The present disclosure relates to a method for optimizing and characterization of efinaconazole transfersomal gel formulation. In an aspect, the method (100) comprises steps of performing pre-formulation studies (102), developing transfersomes (104), by a solvent evaporation method, analyzing (106) the developed transfersomes (104), preparing transfersomal gel (108), by dispersion, hydration, and neutralization, evaluating efinaconazole loaded transfersomal gel (110), selecting optimum efinaconazole transfersomal formulation system (114), based on the particle size and entrapment efficiency; minimizing the vesicle size, characterizing optimized ketoconazole transfersomal formulation (116), based on vesicular shape, morphology and partial differential equations (PDE), Entrapment efficiency, diffusion studies.

No. of Pages : 25 No. of Claims : 8

(12) PATENT APPLICATION PUBLICATION
(21) Application No.202111028392 A
(19) INDIA
(22) Date of filing of Application :24/06/2021
(43) Publication Date : 16/07/2021

(54) Title of the invention : GO GREEN: ANALYZER FOR POLLUTION CONTROL IN VEHICLES

(51) International classification	:G01M0015100000, G16Z0099000000, B60R0025104000, B08B0015000000, G07C0005000000	(71)**Name of Applicant :** **1)Neha Gupta** Address of Applicant :82, PNB Enclave, Dehradun, Uttarakhand, India, 248007 Uttarakhand India
(31) Priority Document No	:NA	(72)**Name of Inventor :** **1)Dr. Brajlata Chauhan**
(32) Priority Date	:NA	**2)Dr. Mukesh Kumar**
(33) Name of priority country	:NA	**3)Vivek Shahare**
(86) International Application No	:NA	**4)Chinu Singla**
Filing Date	:NA	**5)Nitin Arora**
(87) International Publication No	: NA	**6)Anupam Singh**
(61) Patent of Addition to Application Number	:NA	**7)Dr. Satyasundara Mahapatra**
Filing Date	:NA	**8)Shalini Singh**
(62) Divisional to Application Number	:NA	**9)Neha Gupta**
Filing Date	:NA	

(57) Abstract :
The invention is related to Internet of Things based device that monitors the gases coming out from the exhaust pipe and analyzes the real-time value of gases as per BS6 norms. After analysis, it can generate an alert for the vehicle owner about the health of his car and provides the possible reason and a plan of action to control the pollution level, if any. It is an IoT based device that collects the value of different gases emitted from the exhaust pipe and analyzes it. If the level of any gas crosses the threshold level, it notifies the owner about the health of his car. The invention is built using several components such as MQ-gas sensors, GSM module, Wi-Fi module, Arduino UNO, Thingspeak cloud. The product can be fitted at the end of an exhaust pipe of a vehicle. When gas is emitted from the pipe, the sensors sense the exact emission values of different gases and compare it with the threshold value as per the norms set by the government. For the analytics purpose, it contains some cloud subscription that contains the data sent by the sensors through Wi-Fi. The data is collected in the cloud which can be used for further analytics. If the owner of the vehicle does not take any action for the pollution control of the vehicle, then the information will be shared to the local RTO office for corrective measures.

No. of Pages : 20 No. of Claims : 9

(12) PATENT APPLICATION PUBLICATION
(21) Application No.202111028490 A
(19) INDIA
(22) Date of filing of Application :24/06/2021
(43) Publication Date : 16/07/2021

(54) Title of the invention : RHODODENDRON ARBOREUM AND SPILANTHES ACMELLA AS A POTENTIAL DIURETIC FOR THE TREATMENT OF HYPERTENSION

(51) International classification	:A61K0036280000, A61K0036185000, A61K0008970000, A61K0036450000, A61B0005024000
(31) Priority Document No	:NA
(32) Priority Date	:NA
(33) Name of priority country	:NA
(86) International Application No	:NA
Filing Date	:NA
(87) International Publication No	: NA
(61) Patent of Addition to Application Number	:NA
Filing Date	:NA
(62) Divisional to Application Number	:NA
Filing Date	:NA

(71)**Name of Applicant :**
1)Dr. Avijit Mazumder
Address of Applicant :Noida Institute of Engineering and Technology (Pharmacy Institute), 19 Knowledge Park-2, Greater Noida, U.P., 201306 Uttar Pradesh India
2)Dr. Saumya Das
3)Dr. Rupa Mazumder
4)Mr Ankit Sharma
5)Ms. Anamika Sharma
6)Dr. Manas Kumar Das
(72)**Name of Inventor :**
1)Dr. Avijit Mazumder
2)Dr. Saumya Das
3)Dr. Rupa Mazumder
4)Mr Ankit Sharma
5)Ms. Anamika Sharma
6)Dr. Manas Kumar Das

(57) Abstract :
The present invention relates to the evergreen shrub Rhododendron arboreum and Spilanthes acmella are widely used in the curing headache, toothache, blood dysentery, rheumatism, etc. Ethanol extracts of whole plant of chosen plants were prepared by the cold maceration process. Both the extracts showed remarkable diuretic and antihypertensive activity with significant increase in the urine content and significant drop in the heart rate and blood pressure.

No. of Pages : 20 No. of Claims : 5

(12) PATENT APPLICATION PUBLICATION
(21) Application No.202113028487 A
(19) INDIA
(22) Date of filing of Application :24/06/2021
(43) Publication Date : 16/07/2021

(54) Title of the invention : A METHOD AND SYSTEM FOR GENERATING EMPLOYEE RATING IN REAL-TIME

(51) International classification	:G06Q0010100000, G06Q0010060000, H01H0071740000, A47L0009040000, H04W0004330000	(71)**Name of Applicant :** **1)NISHANT CHOUDHARY** Address of Applicant :457, NemiSagar colony, Pushpak Marg, Vaishali Nagar, Jaipur, Rajasthan -302021, India Rajasthan India **2)SURBHI CHOUDHARY**
(31) Priority Document No	:NA	(72)**Name of Inventor :**
(32) Priority Date	:NA	**1)NISHANT CHOUDHARY**
(33) Name of priority country	:NA	**2)SURBHI CHOUDHARY**
(86) International Application No	:NA	
Filing Date	:NA	
(87) International Publication No	: NA	
(61) Patent of Addition to Application Number	:	
Filed on	:01/01/1900	
(62) Divisional to Application Number	:NA	
Filing Date	:NA	

(57) Abstract :
Disclosed herein is a system and method for generating employee rating in real-time. The system 102 obtains employee information 104 from a plurality of entities and validates the obtained employee information 104 by obtaining authentication documents from the plurality of entities. The employee information 104 comprises employee personal information 106, employee employment information 108 and employee professional information 110. The validated employee information is analysed based on a weightage 118, 120 assigned to the employee employment information 108 and employee professional information 110 to generate the employee rating 320.

No. of Pages : 25 No. of Claims : 17

(12) PATENT APPLICATION PUBLICATION
(19) INDIA
(22) Date of filing of Application :01/06/2021

(21) Application No.202117024466 A
(43) Publication Date : 16/07/2021

(54) Title of the invention : OPTICAL FILM ARRANGEMENTS FOR ELECTRONIC DEVICE DISPLAYS

(51) International classification	:G02B0030270000, H04N0013305000, G02F0001133500, H04N0013189000, H04N0013359000
(31) Priority Document No	:62/897093
(32) Priority Date	:06/09/2019
(33) Name of priority country	:U.S.A.
(86) International Application No	:PCT/US2020/048994
Filing Date	:02/09/2020
(87) International Publication No	:WO 2021/046083
(61) Patent of Addition to Application Number	:NA
Filing Date	:NA
(62) Divisional to Application Number	:NA
Filing Date	:NA

(71)**Name of Applicant :**
1)APPLE INC.
Address of Applicant :One Apple Park Way Cupertino, CA 95014 U.S.A.
(72)**Name of Inventor :**
1)KIM, Byoungsuk
2)HUANG, Yi
3)QI, Jun
4)YIN, Victor, H.
5)KIM, Seung, Wook
6)SCAPEL, Nicolas, V.
7)HUANG, Yi-pai

(57) Abstract :
A lenticular display may be formed with convex curvature. The lenticular display may have a lenticular lens film with lenticular lenses that extend across the length of the display. The lenticular lenses may be configured to enable stereoscopic viewing of the display. To enable more curvature in the display while ensuring satisfactory stereoscopic display performance, the display may have stereoscopic zones and non-stereoscopic zones. A central stereoscopic zone may be interposed between first and second non-stereoscopic zones. The non-stereoscopic zones may have more curvature than the stereoscopic zone. To prevent crosstalk within the lenticular display, a louver film may be incorporated into the display. The louver film may have a plurality of transparent portions separated by opaque walls. The opaque walls may control the emission angle of light from the display, reducing crosstalk. The louver film may be interposed between the lenticular lens film and the display panel.

No. of Pages : 41 No. of Claims : 20

(12) PATENT APPLICATION PUBLICATION
(21) Application No.201921014909 A
(19) INDIA
(22) Date of filing of Application :12/04/2019
(43) Publication Date : 16/07/2021

(54) Title of the invention : SYSTEM AND METHOD FOR AUTOMATICALLY SORTING ITEMS IN A PLURALITY OF BINS USING ROBOTS

(51) International classification	:G06Q0010080000, B07C0003140000, B07C0003000000, B07C0007000000, B07C0005360000	(71)**Name of Applicant :** **1)UNBOXROBOTICS LABS PRIVATE LIMITED** Address of Applicant :4th floor, no 22, Salarpuria Towers-I, Hosur road, Industrial layout, Next to forum mall Koramangala, Bangalore Karnataka India Pin code - 560095 Karnataka India **2)**
(31) Priority Document No	:NA	
(32) Priority Date	:NA	
(33) Name of priority country	:NA	
(86) International Application No	:NA	
Filing Date	:NA	
(87) International Publication No	: NA	
(61) Patent of Addition to Application Number	:NA	
Filing Date	:NA	
(62) Divisional to Application Number	:NA	
Filing Date	:NA	

(72)**Name of Inventor :**
1)Mohammadshahid Abdulshakur Memon
2)Pramod Vasant Ghadge

(57) Abstract :
SYSTEM AND METHOD FOR AUTOMATICALLY SORTING ITEMS IN A PLURALITY OF BINS USING ROBOTS A system and method for sorting delivery items in a plurality of bins using a robotic system 203 are provided. The robotic system 203 includes (i) a barcode scanner 206 that scans a barcode of a delivery item that is received from a feeding unit 202, (ii) a control unit 204 that (a) determines a destination bin 208 on which the delivery item to be sorted by processing the scanned barcode and (b) determines a destination path for the robotic system 203 to reach the destination bin 208, (iii) an obstacle detection sensor 210 and a small obstacle detection sensor 212 that detect if any obstacle in the destination path, an inbuilt lifting unit 216 that place the delivery item in the destination bin 208 and a floor barcode unit 218 that localizes the robotic system 203 in the floor for sorting the delivery item on the destination bin 208. FIG. 2

No. of Pages : 43 No. of Claims : 12

(12) PATENT APPLICATION PUBLICATION
(21) Application No.202021003577 A
(19) INDIA
(22) Date of filing of Application :27/01/2020
(43) Publication Date : 16/07/2021

(54) Title of the invention : IMPROVED PROCESS FOR REDUCING NOX •

(51) International classification	:H01M0010440000, G11B0017049000, G03G0015080000, A24D0003060000, B65D0006220000	(71)**Name of Applicant :** **1)PATEL SHAILESH** Address of Applicant :B-57 Shakuntal Bunglows, Opp. Rajhans Cinema, Nikol Ahmedabad Gujarat, India 382350, Gujarat India
(31) Priority Document No	:NA	**2)GANDHI MINKU**
(32) Priority Date	:NA	**3)GANDHI MAUNAL**
(33) Name of priority country	:NA	**4)PATEL JINISH**
(86) International Application No	:NA	(72)**Name of Inventor :**
Filing Date	:NA	**1)PATEL SHAILESH**
(87) International Publication No	: NA	**2)GANDHI MINKU**
(61) Patent of Addition to Application Number	:NA	**3)GANDHI MAUNAL**
Filing Date	:NA	**4)PATEL JINISH**
(62) Divisional to Application Number	:NA	
Filing Date	:NA	

(57) Abstract :
IMPROVED PROCESS FOR REDUCING NOX The present invention provides an alternative process for reducing nitrous oxide. Said invention provides the process which increases the stability of the process with minimum exploration of the NOX. Said invention utilizes Ammonium carbonate solution to reduce NOX which is generated during the process. Said Ammonium carbonate solution is waste by-product of various industries; thereby using the same in process, became ecofriendly and yet efficient

No. of Pages : 12 No. of Claims : 2

(12) PATENT APPLICATION PUBLICATION
(21) Application No.202021007577 A
(19) INDIA
(22) Date of filing of Application :22/02/2020
(43) Publication Date : 16/07/2021

(54) Title of the invention : EXTRACTION, PREPARATION AND PROCESSING OF CHICKEN SKIN OIL BY RECYCLING POULTRY WASTE AND ITS FORMULATION COMPRISES OF BIODEGRADABLE BASE

(51) International classification	:A61K0009000000, A61K0047320000, A61L0026000000, A61K0047100000, A61Q0019000000
(31) Priority Document No	:NA
(32) Priority Date	:NA
(33) Name of priority country	:NA
(86) International Application No	:NA
Filing Date	:NA
(87) International Publication No	: NA
(61) Patent of Addition to Application Number	:NA
Filing Date	:NA
(62) Divisional to Application Number	:NA
Filing Date	:NA

(71)**Name of Applicant :**
1)Dr. D.Y. Patil Institute of Pharmaceutical Sciences, Pimpri, Pune. 411018 And Aayush Heath Care, CD Wing, Office Number D-117, World of Mother, Akurdi, Pune, Maharashtra, 411035
Address of Applicant :Dr. Asha Byju Thomas. Dr. D. Y. Patil Unitech Society™s Dr. D. Y. Patil Institute of Pharmaceutical Sciences & Research, Sant Tukaram Nagar, Pimpri, Pune-411 018 Maharashtra India
(72)**Name of Inventor :**
1)Dr. Sohan Satyanarayan Chitlange
2)Dr. Ravindra Jinay Badhe
3)Dr. Shivani Mukesh Desai
4)Dr. Dheeraj Hanumansingh Nagore
5)Dr. Asha Byju Thomas.

(57) Abstract :
Abstract Extraction, Preparation and Processing of Chicken Skin Oil by Recycling Poultry Waste and Its Formulations for treatment of simple wound, Diabetic wound, burns and cuts. The present invention relates to the field of Extraction, Preparation and Processing of Chicken Skin Oil by Recycling Poultry Waste having therapeutic properties. More specifically, it relates to a formulation having potent antimicrobial, anti-fungal and wound healing properties, which is quite effective in curing external wounds of any nature, especially non-healing wounds of diabetics and wounds, Burns, cut. Novelty of formulation is method of extraction, preparation and combination of chicken Skin oil with other oils in emulgel forms biodegradable carbopol and other gel base. It provides, Bacteriostatic Anti-inflammatory and Antioxidant effect because of Rich in Oleic, Linoleic, Linoleic acid. According to the present invention which comprises of Chicken Skin Oil, acts by Promoting re-epithelialization, increasing fibroblast & collagen deposition, it also helps to Prevents scar formation. These formulations are provided for external or topical application, for the treatment and cure of all types of wounds and lesions in humans and animals.

No. of Pages : 30 No. of Claims : 6

(12) PATENT APPLICATION PUBLICATION
(19) INDIA
(22) Date of filing of Application :16/04/2020
(21) Application No.202021016521 A
(43) Publication Date : 16/07/2021

(54) Title of the invention : MULTI-MASK EQUIPMENT

(51) International classification	:A61N0001390000, G06Q0050220000, C09K0019040000, A62B0023020000, G06F0016953500
(31) Priority Document No	:NA
(32) Priority Date	:NA
(33) Name of priority country	:NA
(86) International Application No	:NA
Filing Date	:NA
(87) International Publication No	: NA
(61) Patent of Addition to Application Number	:NA
Filing Date	:NA
(62) Divisional to Application Number	:NA
Filing Date	:NA

(71)**Name of Applicant :**
1)Med Interventions and Beyond Pvt. Ltd.
Address of Applicant :No. 24 (Co-Working Space), Forum for Innovation Incubation Research & Entrepreneurship, Fatorda Salesian Society, Don Bosco, Fatorda, Margao, Goa 403602 Goa India
(72)**Name of Inventor :**
1)Deepak Pathania

(57) Abstract :
ABSTRACT MULTI-MASK EQUIPMENT Described herein is a multi-mask equipment 100 that includes a mask assembly M configured to accommodate a filter assembly C, D and to mount a face protective shield H. The equipment enables a filter-based mask and shield can be used together as one integrated unit, and at the same time is future ready with more options to mount or use various other accessories, like oxygen inlet / outlet, electronic equipment etc. The multi-mask equipment 100 can be mount-ed over the head of a wearer by means of headbands as mounting mechanism F(LHS and RHS) and straps as adjusting mechanism A3. The equipment ensures that the overall cost of the mask and face protective shield assembly is substantially low as the equipment requires bare minimum recurring cost. Refer Figure 2

No. of Pages : 30 No. of Claims : 20

(12) PATENT APPLICATION PUBLICATION
(21) Application No.202021025371 A
(19) INDIA
(22) Date of filing of Application :16/06/2020
(43) Publication Date : 16/07/2021

(54) Title of the invention : METHOD FOR DETECTING BRAIN CONDITION STATE AND A PORTABLE DETECTION SYSTEM THEREOF

(51) International classification	:A61B0005000000, A61B0005145500, A61B0005145000, A61B0005149500, A61B0001040000
(31) Priority Document No	:NA
(32) Priority Date	:NA
(33) Name of priority country	:NA
(86) International Application No	:NA
Filing Date	:NA
(87) International Publication No	: NA
(61) Patent of Addition to Application Number	:NA
Filing Date	:NA
(62) Divisional to Application Number	:NA
Filing Date	:NA

(71)**Name of Applicant :**
1)ANUPAM LAVANIA
Address of Applicant :Bioscan Research Pvt. Ltd., C/306/A, Shivalik Corporate Park, B/H IOC Petrol Pump, Satellite, Ahmedabad, Gujarat 380015, India Gujarat India
2)SHILPA MALIK
(72)**Name of Inventor :**
1)ANUPAM LAVANIA
2)SHILPA MALIK

(57) Abstract :
METHOD FOR DETECTING BRAIN CONDITION STATE AND A PORTABLE DETECTION SYSTEM THEREOF
ABSTRACT Present disclosure describes the method and system for detecting the brain condition state of a subject. Method comprising calibrating a power zone of the system in real-time and detecting a reflected signal for each of a plurality of transmitted input signals on scanning each of lobe locations of the subject after calibration. Thereafter, method comprising validating an array generated using the plurality of transmitted input signal and corresponding reflected signal for each of the lobe locations and generating a lobe fit value for the validated array using a curve fitting technique. Subsequently, method comprising computing logarithmic ratios corresponding to four pairs of contralateral lobe location, six pairs of ipsilateral lobe locations in left hemisphere and six pairs of ipsilateral lobe locations in right hemisphere using the lobe fit value and classifying the logarithmic ratios into one of brain condition state classes by comparing with pre-labelled logarithmic ratios stored in system. Fig. 1

No. of Pages : 38 No. of Claims : 15

(12) PATENT APPLICATION PUBLICATION
(21) Application No.202021037783 A
(19) INDIA
(22) Date of filing of Application :02/09/2020
(43) Publication Date : 16/07/2021

(54) Title of the invention : OKRA BAST FIBER BASED PURE YARN

(51) International classification	:D06N0007000000, B65B0043120000, C08G0059240000, D06M0013000000, C07D0307330000
(31) Priority Document No	:NA
(32) Priority Date	:NA
(33) Name of priority country	:NA
(86) International Application No	:NA
Filing Date	:NA
(87) International Publication No	: NA
(61) Patent of Addition to Application Number	:NA
Filing Date	:NA
(62) Divisional to Application Number	:NA
Filing Date	:NA

(71)**Name of Applicant :**
1)Shamayita Patra
Address of Applicant :House No. 339, Bhavarjunbithi Bakultala Lane, Ramrajatala, Dandrapukur, Howrah, P.S-Jagacha, P.O- Santragachi West Bengal India
2)Pavan Kumar Gupta
(72)**Name of Inventor :**
1)Pavan Kumar Gupta
2)Shamayita Patra

(57) Abstract :
OKRA BAST FIBER PURE YARN • The proposed invention is about an alternative bast fiber based yarn which can serve as alternative means to boost up the regional economy and environmental. As alternative and easily available renewable source okra is utilised to prepare pure okra bast fiber yarn. The proposed applications of the aforementioned yarns will be finer sacks, bags, carpet backing, handicraft items, geotextiles, agro textiles, home textiles and composites.

No. of Pages : 11 No. of Claims : 6

(12) PATENT APPLICATION PUBLICATION
(21) Application No.202021048406 A
(19) INDIA
(22) Date of filing of Application :05/11/2020
(43) Publication Date : 16/07/2021

(54) Title of the invention : A POWERED MOBILE CONVEYOR

(51) International classification	:B65G0041000000, B32B0037140000, B65G0021200000, B65G0069180000, B65G0021140000	(71)**Name of Applicant :** **1)KARANDIKAR NILESH JAYANT** Address of Applicant :1302, SADASHIV PETH, NEAR KHUNYA MURLIDHAR MANDIR, PUNE 411030, MAHARASHTRA, INDIA Maharashtra India
(31) Priority Document No	:NA	(72)**Name of Inventor :**
(32) Priority Date	:NA	**1)KARANDIKAR NILESH JAYANT**
(33) Name of priority country	:NA	
(86) International Application No	:NA	
Filing Date	:NA	
(87) International Publication No	: NA	
(61) Patent of Addition to Application Number	:NA	
Filing Date	:NA	
(62) Divisional to Application Number	:NA	
Filing Date	:NA	

(57) Abstract :
ABSTRACT A POWERED MOBILE CONVEYOR The present disclosure relates to a powered mobile conveyor (1000) having a base frame (102), a platform (105), a processing unit and conveyor belt assembly (106), the conveyor belt assembly (106) including a central section (106B), an entry/exit section (106C) and an adjustable section (106A). The conveyor comprises a plurality of electric actuators (201A, 201B, 201C, 201D, 201E, 201F, 201G, 201H, 201I) coupled to the conveyor belt assembly (106), the electric actuators configured to displace the conveyor belt assembly (106); a plurality of rollers drums (203A,203B,203C,203D,203E,203F) configured below each of the central section (106B), the entry/exit section (106C) and the adjustable section (106A) and configured to drive the conveyor belt; and guide rollers (204A,204B) attached to the platform (105), the guide rollers (204A,204B) configured to direct the conveyor belt assembly (106) inside a containment. The conveyor (1000) is configured to be displaced by the electric actuators.

No. of Pages : 30 No. of Claims : 13

(12) PATENT APPLICATION PUBLICATION
(19) INDIA
(22) Date of filing of Application :24/12/2020
(21) Application No.202021056327 A
(43) Publication Date : 16/07/2021

(54) Title of the invention : ASSISTIVE CARE CONVERTIBLE SYSTEM FOR HANDLING AND TRANSFER OF PATIENTS

(51) International classification	:B62B0005000000, A61G0005120000, C12M0003000000, A47C0007500000, F03D0013200000	(71)**Name of Applicant :** **1)COIN MEDIX PVT LTD** Address of Applicant :B NO. 1821/1, SHOP NO S-1, GOKUL APPT, PUNDALIK NAGAR ALTO BETIM North Goa GA 403521 IN Goa India
(31) Priority Document No	:NA	(72)**Name of Inventor :**
(32) Priority Date	:NA	**1)Sarvesh Saunlo Bhise**
(33) Name of priority country	:NA	**2)Mahesh S.Borkar**
(86) International Application No	:NA	
Filing Date	:NA	
(87) International Publication No	: NA	
(61) Patent of Addition to Application Number	:NA	
Filing Date	:NA	
(62) Divisional to Application Number	:NA	
Filing Date	:NA	

(57) Abstract :
ABSTRACT Assistive Care Convertible System for Handling and Transfer of Patients The invention discloses an assistive care convertible system for handling and transfer of patients (ACCHT) comprising of a mainframe assembly (100) which in turn comprises of a chassis assembly (101) (base) with wheels (104) , a main base tray assembly (102) (sitting atop the chassis assembly) , a top tray assembly (103) (sitting atop the base tray assembly). The base tray assembly (102) comprises of base tray foot rest sub-assembly (201), base tray seat sub-assembly (202) and base tray back rest sub-assembly (203) connected to each other via a plurality of connecting mechanisms to enable it to move from a completely horizontal planar position to a seated upright position.. The top tray assembly(103) comprising of a top tray foot rest sub-assembly (204), a top tray seat sub-assembly (205) and a top tray back rest sub-assembly (206) connected to each other via a plurality of connecting mechanisms are mounted on the corresponding base tray sub-assemblies via sliding mechanisms and held in place by locking mechanism. In the flat planar position the linked single floating planar structure (floating board structure) is enabled to move as a single unit in the flat horizontal plane (X-direction) by means of a floating travel / displacement mechanism mounted on the mainframe base tray (102). [To be published with Figure 1]

No. of Pages : 23 No. of Claims : 13

(12) PATENT APPLICATION PUBLICATION
(21) Application No.202028025321 A
(19) INDIA
(22) Date of filing of Application :16/06/2020
(43) Publication Date : 16/07/2021

(54) Title of the invention : WIRELESS COMMUNICATION METHOD FOR DEVICE TO DEVICE COMMUNICATION AND USER EQUIPMENT

(51) International classification :H04W 48/00
(31) Priority Document No :NA
(32) Priority Date :NA
(33) Name of priority country :NA
(86) International Application No :PCT/CN2013/080917
Filing Date :06/08/2013
(87) International Publication No : NA
(61) Patent of Addition to Application Number :NA
Filing Date :NA
(62) Divisional to Application Number :201627002807
Filed on :25/01/2016

(71)**Name of Applicant :**
1)Sun Patent Trust
Address of Applicant :450 Lexington Avenue, 38th Floor, New York, NY 10017 U.S.A. U.S.A.
(72)**Name of Inventor :**
1)SUZUKI, Hidetoshi
2)OGAWA, Yoshihiko
3)HOSHINO, Masayuki
4)WANG, Lilei

(57) Abstract :
Provided are wireless communication methods for D2D communication and UEs therefor. A wireless communication method involves transmitting either a first DCI or a second DCI based on whether a first UE and a second UE are to be in a communication type of groupcast or unicast. Another wireless communication method involves transmitting both a first DCI and a second DCI, and whether a specific field in the first DCI and the second DCI is the same indicates whether the first UE and the second UE are to be in a communication type of unicast or groupcast. In the wireless communication methods, the first DCI and the second DCI are scrambled by the UE ID of the second UE if the first UE and the second UE are in the communication type of unicast upon transmitting the first DCI and the second DCI, and the first DCI and the second DCI are scrambled by the group ID if the first UE and the second UE are in the communication type of groupcast upon transmitting the first DCI and the second DCI.

No. of Pages : 49 No. of Claims : 18

(12) PATENT APPLICATION PUBLICATION
(21) Application No.202121000385 A
(19) INDIA
(22) Date of filing of Application :05/01/2021
(43) Publication Date : 16/07/2021

(54) Title of the invention : ELEARNING RECOMMENDATION SYSTEM BASED ON FEEDBACK •

(51) International classification	:G06Q0030020000, G06Q0050000000, G06Q0050200000, G06Q0040000000, G06Q0030000000
(31) Priority Document No	:NA
(32) Priority Date	:NA
(33) Name of priority country	:NA
(86) International Application No	:NA
Filing Date	:NA
(87) International Publication No	: NA
(61) Patent of Addition to Application Number	:NA
Filing Date	:NA
(62) Divisional to Application Number	:NA
Filing Date	:NA

(71)**Name of Applicant :**
1)PRADNYA VAIBHAV KULKARNI
Address of Applicant :B 601, SILVER CREST, SHIVTIRTH NAGAR, PAUD ROAD, PUNE - 411038, MAHARASHTRA, INDIA, MAHARASHTRA, INDIA Maharashtra India
(72)**Name of Inventor :**
1)PRADNYA VAIBHAV KULKARNI
2)DR. SUNIL RAI
3)Dr. Rajneeshkaur Sachdeo Bedi
4)DR. ROHINI KALE

(57) Abstract :
The present invention relates to eLearning recommendation system based on feedback. A e-Learning recommendation system based on feedback and education profile of user comprising of a recommendation server including a recommendation unit incorporating recommender list; an item server, a plurality of client devices, and a data collector with associated data store, communicatively coupled via the network; a login server including an online service configured to be operably connected to associated item data store, wherein the said data store is configured to execute a plurality of models and on the basis of evaluation results, the said recommender unit is configures to provide the results based on the score. Ref: Figure : 1

No. of Pages : 27 No. of Claims : 10

(12) PATENT APPLICATION PUBLICATION
(21) Application No.202121004209 A
(19) INDIA
(22) Date of filing of Application :31/01/2021
(43) Publication Date : 16/07/2021

(54) Title of the invention : TRETRADYDROCURCUMIN NIOSOMAL IN-SITU GEL FOR OCULAR DRUG DELIVERY •

(51) International classification	:A61K0009000000, A61K0047360000, A61K0047340000, A61F0009000000, A61K0031728000
(31) Priority Document No	:NA
(32) Priority Date	:NA
(33) Name of priority country	:NA
(86) International Application No	:NA
Filing Date	:NA
(87) International Publication No	: NA
(61) Patent of Addition to Application Number	:NA
Filing Date	:NA
(62) Divisional to Application Number	:NA
Filing Date	:NA

(71)**Name of Applicant :**
1)Dr. Nagoba Shivappa Narsing
Address of Applicant :Channabasweshwar Pharmacy College (Degree) Latur, Kava Road, Latur-413512, Dist. Latur. (MS) Maharashtra India
2)Deshmukh Aditya Yuvraj
3)Dr. Deshpande Anant Narayanrao
4)Dr. Vijayendra Swamy S. M
(72)**Name of Inventor :**
1)Dr. Nagoba Shivappa Narsing
2)Deshmukh Aditya Yuvraj
3)Dr. Deshpande Anant Narayanrao
4)Dr. Vijayendra Swamy S. M

(57) Abstract :
The present invention relates to a method of preparations of niosomal in-situ gel for ocular drug delivery comprising of tetrahydrocurcumin with other pharmaceutical acceptable excipients and process for preparation thereof.

No. of Pages : 19 No. of Claims : 10

(12) PATENT APPLICATION PUBLICATION
(19) INDIA
(22) Date of filing of Application :05/03/2021
(21) Application No.202121009354 A
(43) Publication Date : 16/07/2021

(54) Title of the invention : PROCESS FOR ISOLATION AND RECOVERY OF ANTIOXIDANT SUBSTANCES

(51) International classification	:C07C0051090000, B01D0071020000, B32B0007060000, C08K0005130000, C13K0013000000
(31) Priority Document No	:NA
(32) Priority Date	:NA
(33) Name of priority country	:NA
(86) International Application No	:NA
Filing Date	:NA
(87) International Publication No	: NA
(61) Patent of Addition to Application Number	:NA
Filing Date	:NA
(62) Divisional to Application Number	:NA
Filing Date	:NA

(71)**Name of Applicant :**
1)Dr. ANUPAMA KUMAR
Address of Applicant :Department of Chemistry, Visvesvaraya National Institute of Technology, Nagpur Maharashtra India
2)Dr. SACHIN A. MANDAVGANE
(72)**Name of Inventor :**
1)Dr. SACHIN A. MANDAVGANE
2)Dr. ANUPAMA KUMAR
3)PRAFUL S. DADHE
4)RANJITA S. DAS
5)RASHMI RAHAGUDE

(57) Abstract :
ABSTRACT PROCESS FOR ISOLATION AND RECOVERY OF ANTIOXIDANT SUBSTANCES The present subject matter provides a process for isolation of antioxidant substances such as polyphenols from peels of fruits or vegetables or potato peels. The peels are subjected to hydrolysis and the polyphenol mixture thus obtained by hydrolysis is purified to a high purity by constructing special polymer matrix. The process is capable to purify polyphenols from ultra-dilute polyphenol solution. Kanan Puranik IN/PA 1098 Patent Agent for the Applicant

No. of Pages : 26 No. of Claims : 10

(12) PATENT APPLICATION PUBLICATION
(21) Application No.202121013632 A
(19) INDIA
(22) Date of filing of Application :27/03/2021
(43) Publication Date : 16/07/2021

(54) Title of the invention : A SYSTEM FOR MAKING SQUARE AND OCTAGONAL SHAPED REINFORCED BAMBOO CORE COMPOSITE SELF DRILLING FENCING POSTS

(51) International classification	:H04L0009320000, F16B0025100000, E04H0012220000, F16B0013000000, E01F0015040000	(71)**Name of Applicant :** **1)Ganesh Verma** Address of Applicant :Anand Vatika, Samriddhi vihar, Samadhan, College Village Fari Post, Bijabhat, Bemetara Chhattisgarh - 491335 Chattisgarh India
(31) Priority Document No	:NA	(72)**Name of Inventor :** **1)Ganesh Verma**
(32) Priority Date	:NA	
(33) Name of priority country	:NA	
(86) International Application No	:NA	
Filing Date	:NA	
(87) International Publication No	: NA	
(61) Patent of Addition to Application Number	:NA	
Filing Date	:NA	
(62) Divisional to Application Number	:NA	
Filing Date	:NA	

(57) Abstract :
This invention comprised of a method and design for the making of an octagonal shaped reinforced bamboo-based boundary pole jacketed within a Galvanized Iron roll-formed sheet with Polyurethane Foam (PUF) used as a buffer and binding agent. The machine has rollers and cutting instrument to cut, roll and bind the Galvanized Iron around the bamboo in octagonal shape. To enhance the design, it has a ground anchor designed which is capable of manually self-drilling the pole into the ground which makes the installation of the same easier. Figure 2 shows the flow of the making of the pole where the raw materials are combined into the making of a easy to install, durable, affordable boundary poles. TITLE A system for making Square and Octagonal shaped Reinforced Bamboo Core Composite Self Drilling Fencing Posts

No. of Pages : 13 No. of Claims : 5

(12) PATENT APPLICATION PUBLICATION
(21) Application No.202121021410 A
(19) INDIA
(22) Date of filing of Application :12/05/2021
(43) Publication Date : 16/07/2021

(54) Title of the invention : AN ANIMAL TRACKING SYSTEM USING AN AD HOC NETWORK AND A NECK-WORN TRACKING DEVICE.

(51) International classification	:A01K0029000000, H04W0084180000, H04L0029080000, A01K0011000000, A01K0003000000	(71)**Name of Applicant :** **1)AJAY KUSHWAHA** Address of Applicant :Street no 9, Opposite Radhika Palace, Shanti Nagar ,Bhilai, Chhattisgarh 490023 Chattisgarh India (72)**Name of Inventor :** **1)AJAY KUSHWAHA**
(31) Priority Document No	:NA	
(32) Priority Date	:NA	
(33) Name of priority country	:NA	
(86) International Application No	:NA	
Filing Date	:NA	
(87) International Publication No	: NA	
(61) Patent of Addition to Application Number	:NA	
Filing Date	:NA	
(62) Divisional to Application Number	:NA	
Filing Date	:NA	

(57) Abstract :
An animal tracking system using an Ad hoc network and a neck-worn tracking device. The invention has a controlling and monitoring system to manage wild animals inside a reserve by building a virtual boundary. A central unit communicates with the anchors placed in multiple concentric arrangements inside the wild reserve to obtain data from the animals and if any animal crosses the barricade making a virtual wall for the animals inside it. To communicate the animals have a wearable tracking device with the identification number and transceiver with LoRa based communication module. The anchors are made cable to identify unusual activity like poaching, fire, or floods, and the controlling central system is informed to raise alarms. In addition to identifying the position of the tracking device can redirect the animal to the optimal end of the forest for safety. The animal-worn devices have triggers to restrict the animal from crossing the virtual barricade and they can be used for channeling the animal.

No. of Pages : 26 No. of Claims : 9

(12) PATENT APPLICATION PUBLICATION
(21) Application No.202121024431 A
(19) INDIA
(22) Date of filing of Application :01/06/2021
(43) Publication Date : 16/07/2021

(54) Title of the invention : COOKING UTENSIL WITH HEAT AUGMENTING SYSTEM

(51) International classification	:A23L0005100000, A47J0036320000, A47J0027080000, A47J0037100000, A47J0043280000
(31) Priority Document No	:NA
(32) Priority Date	:NA
(33) Name of priority country	:NA
(86) International Application No	:NA
Filing Date	:NA
(87) International Publication No	: NA
(61) Patent of Addition to Application Number	:NA
Filing Date	:NA
(62) Divisional to Application Number	:NA
Filing Date	:NA

(71)**Name of Applicant :**
1)GUPTA, Divas
Address of Applicant :C/O Jamna Prasad Gupta, Bipin General Store, Itwara Bazar, Buxwaha, District- Chhatarpur 471318, Madhya Pradesh, India Madhya Pradesh India
(72)**Name of Inventor :**
1)GUPTA, Divas

(57) Abstract :
A cooking utensil (100) is disclosed. The cooking utensil (100) includes a vessel (102) that may hold oil therein. The cooking utensil (100) also includes a heat augmenting system (104) coupled to the vessel (102) that adds the heat bubbles (302) in the oil, such that the oil performs partial cooking while the heat bubbles (302) perform the other part of cooking. The heat bubbles (302) also heat the oil to achieve a uniform temperature of oil across the volume of the oil inside the vessel (102). As a result, the cooking of the food item is uniform across all surfaces of the food item. Uniform cooking of the food item results in the better cooked food item.

No. of Pages : 23 No. of Claims : 13

(12) PATENT APPLICATION PUBLICATION
(19) INDIA
(22) Date of filing of Application :11/06/2021
(21) Application No.202121026088 A
(43) Publication Date : 16/07/2021

(54) Title of the invention : METHOD AND SYSTEM FOR AUTOMATICALLY MONITORING THE GROWTH OF PLANTS

(51) International classification	:A01G0007000000, A01G0031020000, C07K0014415000, A01G0025000000, C12N0015820000
(31) Priority Document No	:NA
(32) Priority Date	:NA
(33) Name of priority country	:NA
(86) International Application No	:NA
Filing Date	:NA
(87) International Publication No	: NA
(61) Patent of Addition to Application Number	:NA
Filing Date	:NA
(62) Divisional to Application Number	:NA
Filing Date	:NA

(71)**Name of Applicant :**
1)Dr. Ashish Mishra
Address of Applicant :Professor, Department of Computer Science and Engineering, Gyan Ganga Institute of Technology and Sciences, Jabalpur, Madhya Pradesh 482003 India Madhya Pradesh India
2)Arya Dubey
3)Dr. Shishir Dixit
4)Dr. Dheeraj Malhotra
5)Dr. Neha Malhotra
6)Dr. Priti Maheshwary
7)Ankur Pandey
8)Kuldeep Kumar Swarnkar
9)Dr. Vijay Bhuria
10)Dr. Himmat Singh Ahirwar
(72)**Name of Inventor :**
1)Dr. Ashish Mishra
2)Arya Dubey
3)Dr. Shishir Dixit
4)Dr. Dheeraj Malhotra
5)Dr. Neha Malhotra
6)Dr. Priti Maheshwary
7)Ankur Pandey
8)Kuldeep Kumar Swarnkar
9)Dr. Vijay Bhuria
10)Dr. Himmat Singh Ahirwar

(57) Abstract :
The present invention relates to a method and system for automatically monitoring the growth of plants. To start with, the method and system scans a leaf (108) of a plant (104) using a user™s device (102) and compares with a plurality of images stored in a database (110) to determine the type of plant. Subsequently, the method and system monitors the root of plant (104) utilizing a smart chip (106) to determine a plurality of conditions corresponding to the growth of plants. Further, the method and system measures the surrounding temperature of the plant using a thermometer (204) and moisture levels in the soil utilizing a tensiometer (202) positioned in the soil and accordingly performs a plurality of actions. Later, the method and system transmits a notification or alert to the user™s device (102) regarding the plurality of conditions for the growth of plants.

No. of Pages : 27 No. of Claims : 7

(12) PATENT APPLICATION PUBLICATION
(21) Application No.202121026105 A
(19) INDIA
(22) Date of filing of Application :11/06/2021
(43) Publication Date : 16/07/2021

(54) Title of the invention : UNASSAILABLE AUTHORIZATION MULTIPLE USER ACCESS SYSTEM USING BIOMETRICS

(51) International classification	:G06K0009000000, H04L0029060000, H04L0009320000, G06F0021320000, H04W0012020000
(31) Priority Document No	:NA
(32) Priority Date	:NA
(33) Name of priority country	:NA
(86) International Application No	:NA
Filing Date	:NA
(87) International Publication No	: NA
(61) Patent of Addition to Application Number	:NA
Filing Date	:NA
(62) Divisional to Application Number	:NA
Filing Date	:NA

(71)**Name of Applicant :**
1)Dilip Dalgade
Address of Applicant :Flat no 201 Airoli Shivshankar Tower plot no.55 sector 20b Airoli Navi Mumbai pin code. 400708 Maharashtra India
2)Ashish Sharma
3)Tarush Singh
4)Arpit Singh
5)Rahul Pandya
(72)**Name of Inventor :**
1)Dilip Dalgade
2)Ashish Sharma
3)Tarush Singh
4)Arpit Singh
5)Rahul Pandya

(57) Abstract :
This research paper aims to determine how the current authentication system can be modified to the next level using bio metrics. It is a unique form of identification for every individual as it is based on a unique identity which is biometrics. Implementing fingerprint identification systems makes the process faster and makes security pins, cards, and other things obsolete. The paper™s primary focus is to introduce a new methodology by which anyone can share their personalised information access to another person, yet having the control in their own hands by the biometric authentication system as well as a two factor authentication that the end users control without sharing any extra essential information, Thus, it makes the systems security system highly secure, breach resistant and convenient for use. This study is similar to other payment platforms with an improvised idea and using the same software application in different areas like electric car authentication and smart cities (houses).

No. of Pages : 14 No. of Claims : 2

(12) PATENT APPLICATION PUBLICATION
(19) INDIA
(22) Date of filing of Application :11/06/2021
(21) Application No.202121026132 A
(43) Publication Date : 16/07/2021

(54) Title of the invention : SYSTEM AND METHOD TO TRANSPORT PRODUCTS OVER A NETWORK

(51) International classification	:G06F0009500000, H04W0004700000, G05D0001020000, G06Q0050300000, G01C0021340000
(31) Priority Document No	:NA
(32) Priority Date	:NA
(33) Name of priority country	:NA
(86) International Application No	:NA
Filing Date	:NA
(87) International Publication No	: NA
(61) Patent of Addition to Application Number	:NA
Filing Date	:NA
(62) Divisional to Application Number	:NA
Filing Date	:NA

(71)**Name of Applicant :**
1)Aditya Jain
Address of Applicant :Student, Department of Computer Science and Engineering, Gyan Ganga Institute of Technology and Sciences, Jabalpur, Madhya Pradesh India Pin 482003 Madhya Pradesh India
2)Abhinandan Singh
3)Dr. Priti Maheshwary
4)Dr. Shishir Dixit
5)Dr. Jyoti Mishra
6)Dr. Priyank Jain
7)Prashant Kumar Shrivastava
(72)**Name of Inventor :**
1)Aditya Jain
2)Abhinandan Singh
3)Dr. Priti Maheshwary
4)Dr. Shishir Dixit
5)Dr. Jyoti Mishra
6)Dr. Priyank Jain
7)Prashant Kumar Shrivastava

(57) Abstract :
Disclosed are a system (100) and method to transport one or more products over a network (106). The system (100) includes one or more processors (202); and a memory (204). The memory (204) is coupled to the processors (202) and to store program instructions executable by the one or more processors (202). The processors (202) are configured to receive requirement data pertaining to the products, a pick-up location, and a drop location from one or more first users over a communication application through one or more computing devices (104). The processors (202) are configured to receive route data from one or more second users over the communication application through the computing devices (104). The processors (202) are configured to match the requirement data with the route data to assign a transport job to the second user. The processors (202) are configured to allocate a predefined amount to the second users upon completion of the transport job.The most illustrative drawing: FIG. 1.

No. of Pages : 26 No. of Claims : 4

(12) PATENT APPLICATION PUBLICATION
(21) Application No.202121026217 A
(19) INDIA
(22) Date of filing of Application :12/06/2021
(43) Publication Date : 16/07/2021

(54) Title of the invention : A NOVEL PLANT GROWTH PROMOTER WITH ORGANIC MICRONUTRIENTS AND ANTIFUNGAL PROPERTIES

(51) International classification	:A23L0029000000, C12N0015820000, B32B0027300000, B32B0001020000, A01N0063000000
(31) Priority Document No	:NA
(32) Priority Date	:NA
(33) Name of priority country	:NA
(86) International Application No	:NA
Filing Date	:NA
(87) International Publication No	: NA
(61) Patent of Addition to Application Number	:NA
Filing Date	:NA
(62) Divisional to Application Number	:NA
Filing Date	:NA

(71)**Name of Applicant :**
1)Dr Ajay Harivansh Shukla
Address of Applicant :11, Deep Kiran, Shivam Nagar, Hirawadi road, Panchavati, Nashik Maharashtra India 422003 Mob. +91 9021217110 Email- ahs.nsk@gmail.com Maharashtra India
(72)**Name of Inventor :**
1)Dr Ajay Harivansh Shukla

(57) Abstract :
The present invention related to a novel plant growth promoter with organic micronutrients and antifungal properties. More particularly, the present invention related to K- Silico Alginate (KSA) is manufactured in stages wise manner to get powder KSA ready for agricultural usage. K- Silico Alginate is a novel agricultural input as it can complement multiple products that a farmer needs for regular farming. KSA has been found to enhance plant growth by acting as Growth Stimulant and provide essential mineral, vitamins and micronutrients in organic form. Additionally, it is also functional as antifungal agent that acts as preventive and curative base for farming.

No. of Pages : 16 No. of Claims : 4

(12) PATENT APPLICATION PUBLICATION
(21) Application No.202121026222 A
(19) INDIA
(22) Date of filing of Application :12/06/2021
(43) Publication Date : 16/07/2021

(54) Title of the invention : A NASAL EFAVIRENZ NANOSUSPENSION FORMULATION FOR THE TARGETED DRUG DELIVERY IN NEURO-AIDS

(51) International classification	:A61K0009000000, A61K0009190000, A61K0009510000, G06T0007000000, A61K0047100000
(31) Priority Document No	:NA
(32) Priority Date	:NA
(33) Name of priority country	:NA
(86) International Application No	:NA
Filing Date	:NA
(87) International Publication No	: NA
(61) Patent of Addition to Application Number	:NA
Filing Date	:NA
(62) Divisional to Application Number	:NA
Filing Date	:NA

(71)**Name of Applicant :**
1)Mrs. Smita Prakash Kakad
Address of Applicant :Sunderban bunglow, Mahadev Bag, Makhmalabad road, Panchvati, Nashik, 422003 Maharashtra India
2)Dr. Sanjay Kshirsagar
(72)**Name of Inventor :**
1)Mrs. Smita Prakash Kakad
2)Dr. Sanjay Kshirsagar

(57) Abstract :
The present invention relates to a nasal efavirenz nanosuspension formulation for the targeted drug delivery in neuro-AIDS wherein efavirenz nanoparticles are effectively solubilized in HPMC and water; to it added electrostatic surfactant SLS for stability whereas poloxamer 407 used as polymer for stearic stability and mucoadhesive property are given by HPMC, followed by lyophilization to get stable nanosuspension of low particle size enables it to transport via nasal route of administration from nasal mucosa through olfactory region and trigeminal nerves to bypass BBB to enhanced the bioavailable concentration at the brain for better therapeutic efficacy to cure neuro-AIDS defects. The said nanosuspension is evaluated by DSC, FTIR, X-ray diffraction, Zeta potential, Particle size, pH to confirm the stability and in-vitro release study, in-vivo nasal mucociliary transport time ;drug targeting index; gamma scintigraphy; nasal histopathology study and in-vivo study were done to study the pharmacokinetic parameters of the targeted drug delivery through nasal route for neuro-AIDS.

No. of Pages : 30 No. of Claims : 10

(12) PATENT APPLICATION PUBLICATION
(21) Application No.202121026224 A
(19) INDIA
(22) Date of filing of Application :12/06/2021
(43) Publication Date : 16/07/2021

(54) Title of the invention : A FOOTREST ASSEMBLY FOR A DENTAL CHAIR

(51) International classification	:A01K0097100000, A47C0003025000, A61G0013120000, A61H0001020000, A47G0025060000
(31) Priority Document No	:NA
(32) Priority Date	:NA
(33) Name of priority country	:NA
(86) International Application No	:NA
Filing Date	:NA
(87) International Publication No	: NA
(61) Patent of Addition to Application Number	:NA
Filing Date	:NA
(62) Divisional to Application Number	:NA
Filing Date	:NA

(71)**Name of Applicant :**
1)BARGE, Prerna Uttam
Address of Applicant :Dept. of Paediatric & Preventive Dentistry, School of Dental Sciences, Krishna Institute of Medical SciencesDeemed to be University", Karad, Satara, Maharashtra - 415539. Maharashtra India
2)Shashikiran N. D.
3)GAONKAR, Namrata
4)HADKAR, Savita
(72)**Name of Inventor :**
1)BARGE, Prerna Uttam
2)Shashikiran N. D.
3)GAONKAR, Namrata
4)HADKAR, Savita

(57) Abstract :
The present invention provides a footrest assembly (100) for a dental chair. The assembly (100) provides support for a patient's legs during dental treatment. The assembly (100) includes a pair of laterally spaced supporting legs (10) mounted on a base plate (20) for supporting the assembly (100) on the ground, a footrest plate (30) pivotally arranged on a horizontal rod (60) for supporting patient™s legs, the footrest plate (30) being rotatable along the axis of the horizontal rod (60) and the rotation of the footrest plate (30) is restricted to a predefined angle by a stopper (70), a wheel arrangement (40) for movement of the assembly (100) from one position to other, a locking arrangement provided on the wheels (40) for preventing movement of the assembly (100) and one or more suction cups (50) arranged below the base plates (20) for securing the assembly (100) on a fixed position.

No. of Pages : 17 No. of Claims : 7

(12) PATENT APPLICATION PUBLICATION
(19) INDIA
(22) Date of filing of Application :12/06/2021
(21) Application No.202121026244 A
(43) Publication Date : 16/07/2021

(54) Title of the invention : A CENTRALIZED CRIME REPORTING AND MANAGEMENT SYSTEM

(51) International classification	:G06Q0050260000, G06Q0010100000, G06Q0010080000, H04L0012580000, G08B0025000000
(31) Priority Document No	:NA
(32) Priority Date	:NA
(33) Name of priority country	:NA
(86) International Application No	:NA
Filing Date	:NA
(87) International Publication No	: NA
(61) Patent of Addition to Application Number	:NA
Filing Date	:NA
(62) Divisional to Application Number	:NA
Filing Date	:NA

(71)**Name of Applicant :**
1)Dr. Ashish Mishra
Address of Applicant :Professor, Department of Computer Science and Engineering, Gyan Ganga Institute of Technology and Sciences, Jabalpur, Madhya Pradesh 482003 India Madhya Pradesh India
2)Chaitanya Rai
3)Sarvagya Shukla
4)Mohit Kadwe
5)Dr. Shishir Dixit
6)Dr. Priti Maheshwary
7)Ankur Pandey
8)Shweta Yadav
9)Dr. Jaideep Patel
(72)**Name of Inventor :**
1)Dr. Ashish Mishra
2)Chaitanya Rai
3)Sarvagya Shukla
4)Mohit Kadwe
5)Dr. Shishir Dixit
6)Dr. Priti Maheshwary
7)Ankur Pandey
8)Shweta Yadav
9)Dr. Jaideep Patel

(57) Abstract :
The centralized crime recording and management system to facilitate ease of access to the public enabling them to register the complaint without any restriction on place to register such a complaint. The present centralized system facilitates anonymous complaint registration. The present centralized system also aids in crime management between the centralized police system and all the other subsidiaries like state police departments and other law enforcement organizations. Fig. 1 is the architecture of the centralized crime recording and management system.

No. of Pages : 30 No. of Claims : 7

(12) PATENT APPLICATION PUBLICATION
(21) Application No.202121026261 A
(19) INDIA
(22) Date of filing of Application :12/06/2021
(43) Publication Date : 16/07/2021

(54) Title of the invention : A HEAD STABILIZER FOR A DENTAL CHAIR.

(51) International classification	:A61G0015120000, A61G0013120000, A61G0015100000, A61G0015000000, A61G0015020000
(31) Priority Document No	:NA
(32) Priority Date	:NA
(33) Name of priority country	:NA
(86) International Application No	:NA
Filing Date	:NA
(87) International Publication No	: NA
(61) Patent of Addition to Application Number	:NA
Filing Date	:NA
(62) Divisional to Application Number	:NA
Filing Date	:NA

(71)**Name of Applicant :**
1)BARGE, Prerna Uttam
Address of Applicant :Dept. of Paediatric & Preventive Dentistry, School of Dental Sciences, Krishna Institute of Medical SciencesDeemed to be University", Karad, Satara, Maharashtra - 415539. Maharashtra India
2)Shashikiran N. D.
3)GAONKAR, Namrata
4)HADKAR, Savita
(72)**Name of Inventor :**
1)BARGE, Prerna Uttam
2)Shashikiran N. D.
3)GAONKAR, Namrata
4)HADKAR, Savita

(57) Abstract :
The present invention provides a head stabilizer (100) for a dental chair. The head stabilizer (100) supports and stabilizes the head of a patient on the dental chair. The head stabilizer includes a horizontal support (10) removably attached on a headrest of the dental chair, a cushion (20) secured over the horizontal support (10) for cushioning head and neck of the patient, lateral pads (30) slidably arranged on the sides of the horizontal support (10) for accommodating different sizes of the head of the patient, pairs of straps (40) extending from each of the lateral pads (30) for fastening the head of the patient and pairs of straps (40) extending from sides of the horizontal support for mounting the head stabilizer (100) on the dental chair. The lateral pads (30) are connected by tension springs for restoring the pads (30) closer, thereby gripping the patient's head from the sides.

No. of Pages : 17 No. of Claims : 6

(12) PATENT APPLICATION PUBLICATION
(21) Application No.202121026262 A
(19) INDIA
(22) Date of filing of Application :12/06/2021
(43) Publication Date : 16/07/2021

(54) Title of the invention : A SYSTEM FOR FLUENT LANGUAGE LEARNING BY ADOPTING MUSCLE MEMORY AND ELIMINATION OF REGIONAL PRONUNCIATION

(51) International classification	:G09B0019060000, G09B0005060000, G09B0019040000, G10L0013000000, G16H0030200000
(31) Priority Document No	:NA
(32) Priority Date	:NA
(33) Name of priority country	:NA
(86) International Application No	:NA
Filing Date	:NA
(87) International Publication No	: NA
(61) Patent of Addition to Application Number	:NA
Filing Date	:NA
(62) Divisional to Application Number	:NA
Filing Date	:NA

(71)**Name of Applicant :**
1)Mr. Sagar Arjunwadkar
Address of Applicant :33/14, Prathamesh CHS, Prabhat Road Lane 5, Karve Road, Pune - 411004, Maharashtra, India Maharashtra India
2)Mrs. Rama Sarode
(72)**Name of Inventor :**
1)Mr. Sagar Arjunwadkar
2)Mrs. Rama Sarode

(57) Abstract :
A language learning system with a visualized pronunciation is used for fluent language learning by adopting muscle memory and elimination of regional pronunciation is disclosed. It shows the anatomy of muscle movement for each sound by using visual aids. It mainly focuses on tones and how a muscle is used to pronounce a particular (sound/syllable) word. Through evaluations, invention can effectively improve speaking ability of user. The system includes Registration module, Authentication module, Display and Language Learning module along with language database, compare module, and Memory unit; and the method includes the steps of: extracting full-sentence sample speech from language database, user needs to record audio by reading full sentence as language sample speech loudly before accessing the information, each visual aid explains articulation and which muscle movements happen for particular sound. Accessing all visual aids has to be completed in defined time and after that completion report is generated.

No. of Pages : 19 No. of Claims : 13

(12) PATENT APPLICATION PUBLICATION
(19) INDIA
(22) Date of filing of Application :12/06/2021
(21) Application No.202121026272 A
(43) Publication Date : 16/07/2021

(54) Title of the invention : A HAPTIC RESPONSE GLOVE FOR VIRTUAL REALITY AND AUGMENTED REALITY

(51) International classification	:G06F0003010000, G06T0019000000, G02B0027010000, A63F0013285000, G06F0003034600
(31) Priority Document No	:NA
(32) Priority Date	:NA
(33) Name of priority country	:NA
(86) International Application No	:NA
Filing Date	:NA
(87) International Publication No	: NA
(61) Patent of Addition to Application Number	:NA
Filing Date	:NA
(62) Divisional to Application Number	:NA
Filing Date	:NA

(71)**Name of Applicant :**
1)NARODE, Siddhant Maheshkumar
Address of Applicant :Vishwakarma Institute of Technology, Pune, Maharashtra, India Maharashtra India
2)KHAN, Suheb Nasirhusain
3)MHETRE, Manisha Rajesh
(72)**Name of Inventor :**
1)NARODE, Siddhant Maheshkumar
2)KHAN, Suheb Nasirhusain
3)MHETRE, Manisha Rajesh

(57) Abstract :
ABSTRACT A HAPTIC RESPONSE GLOVE FOR VIRTUAL REALITY AND AUGMENTED REALITY The present invention relates to a haptic response glove for virtual reality and augmented reality. The object of the proposed invention is to use in active training without the involvement of industrial risks with the help of virtual environments created for the training. The present invention is a wearable haptic response device which works on even mobile phones since the launch of AR foundation and vuforia is boomed the use of AR/VR in mobile phones. The user of haptics Glove can feel the haptics on users™ hand in real environment when the users detected hand in virtual reality comes in contact with a virtual object. Following invention is described in detail with the help of Figure 1 and2 of sheet 1 showing basic diagram of proposed invention. [To be published with fig. 1 and fig 2]

No. of Pages : 16 No. of Claims : 5

(12) PATENT APPLICATION PUBLICATION
(21) Application No.202121026273 A
(19) INDIA
(22) Date of filing of Application :12/06/2021
(43) Publication Date : 16/07/2021

(54) Title of the invention : A DEVICE FOR COUNTING PRESSURE COOKER WHISTLE

(51) International classification	:A47J0027080000, F24C0003120000, G06F0003010000, A47J0045060000, F24C0015100000	(71)**Name of Applicant :** **1)PATIL, Aarti Satish** Address of Applicant :Vishwakarma Institute of Information Technology, Kondhwa (Budruk) Pune, Maharashtra 411048, India Maharashtra India
(31) Priority Document No	:NA	**2)KHADE, Omkar Haridas**
(32) Priority Date	:NA	**3)AUTI, Vinay Rajesh**
(33) Name of priority country	:NA	**4)BHALERAO - PANAJKAR, Rohini Shrikrishna**
(86) International Application No	:NA	(72)**Name of Inventor :**
Filing Date	:NA	**1)PATIL, Aarti Satish**
(87) International Publication No	: NA	**2)KHADE, Omkar Haridas**
(61) Patent of Addition to Application Number	:NA	**3)AUTI, Vinay Rajesh**
Filing Date	:NA	**4)BHALERAO - PANAJKAR, Rohini Shrikrishna**
(62) Divisional to Application Number	:NA	
Filing Date	:NA	

(57) Abstract :
ABSTRACT A DEVICE FOR COUNTINGPRESSURE COOKER WHISTLES The present invention relates to a device for counting pressure cooker whistles. The object of the proposed invention is to count the whistles of a pressure cooker and switch the gas stove OFF as and when desired by the user. The present invention is helpful in domestic household, hotels/catering businesses in cooking and also expressly helpful for the benefit of hearing impaired community. In the proposed invention user can give commands to the device by using the smartphone application that uses a Bluetooth local server to connect to the device. The user can turn OFF the gas, a timer is set for the gas knob [104] to turn OFF, and the numbers of whistles are set to schedule the gas knob [104] to be turned off. Following invention is described in detail with the help of Figure 1 of sheet 1 illustrates components of proposed invention. [To be published with Figure 1]

No. of Pages : 10 No. of Claims : 4

(12) PATENT APPLICATION PUBLICATION
(21) Application No.202121026274 A
(19) INDIA
(22) Date of filing of Application :12/06/2021
(43) Publication Date : 16/07/2021

(54) Title of the invention : A VOICE OPERATED ROBOTIC HUMANOID ARM

(51) International classification	:B25J0009160000, G10L0015220000, B25J0015000000, G06N0003000000, B25J0009000000
(31) Priority Document No	:NA
(32) Priority Date	:NA
(33) Name of priority country	:NA
(86) International Application No	:NA
Filing Date	:NA
(87) International Publication No	: NA
(61) Patent of Addition to Application Number	:NA
Filing Date	:NA
(62) Divisional to Application Number	:NA
Filing Date	:NA

(71)**Name of Applicant :**
1)NEHETE, Ketan Ganesh
Address of Applicant :Vishwakarma Institute of Information Technology, Kondhwa (Budruk) Pune, Maharashtra 411048, India Maharashtra India
2)GUPTA, Santosh
3)MAGAR, Omkar Ramakant
4)GOSAVI, Atharv Sudhir
5)PARKHI, Akanksha Netaji
6)BHALERAO-PANAJKAR, Rohini Shrikrishna
(72)**Name of Inventor :**
1)NEHETE, Ketan Ganesh
2)GUPTA, Santosh
3)MAGAR, Omkar Ramakant
4)GOSAVI, Atharv Sudhir
5)PARKHI, Akanksha Netaji
6)BHALERAO-PANAJKAR, Rohini Shrikrishna

(57) Abstract :
ABSTRACT A VOICE OPERATED ROBOTIC HUMANOID ARM The present invention relates toavoice operated robotic humanoid arm.. The object of the proposed invention is to control the humanoid arm through voice commands from any place of the world as long as there is internet access. Present invention provides a reprogrammable and multifunctional voice-operated robotic humanoid arm, using a 3D printing technique. The arm constitutes of the internet of things for a voice-operated five-fingered palm. Proposed arm has a humanoid appearance while maintaining the precision of a robotic gripper. As soon as the user gives a voice command through Google assistant [201] linked with the arm, it will perform the task. Following invention is described in detail with the help of figure 1 of sheet 1 showing basic diagram of proposed invention. [To be published with Fig. 1]

No. of Pages : 15 No. of Claims : 8

(12) PATENT APPLICATION PUBLICATION
(21) Application No.202121026279 A
(19) INDIA
(22) Date of filing of Application :13/06/2021
(43) Publication Date : 16/07/2021

(54) Title of the invention : SPECIFICATION OF THE SAFETY SYSTEM/S FOR DRIVER AND PASSENGERS/PETS IN AUTOMOBILES TO CURB CATASTROPHES

(51) International classification	:B60W0040080000, B60W0040090000, B62D0001040000, B60W0010200000, B60K0028060000	(71)**Name of Applicant :** **1)Kushal Girish Khemani** Address of Applicant :G-9, Clarion Park, Aundh Pune, Maharashtra-411007 Maharashtra India (72)**Name of Inventor :** **1)Kushal Girish Khemani**
(31) Priority Document No	:NA	
(32) Priority Date	:NA	
(33) Name of priority country	:NA	
(86) International Application No	:NA	
Filing Date	:NA	
(87) International Publication No	: NA	
(61) Patent of Addition to Application Number	:NA	
Filing Date	:NA	
(62) Divisional to Application Number	:NA	
Filing Date	:NA	

(57) Abstract :
The Automotive safety system aims keeping the passengers safe from the accidents caused by distracted drivers who are talking on the phone or Driving under the influence of alcohol and other psychoactive substances. The system ensures the drivers hand is always on the steering wheel. This system will also prevent children/people/pets from dying due to lack of oxygen or leakage of any other gas. Hot car accidents will also be prevented. These features can be added to any vehicle pre or post manufacturing, but preference should be to add during manufacturing.

No. of Pages : 9 No. of Claims : 4

(12) PATENT APPLICATION PUBLICATION
(21) Application No.202121026289 A
(19) INDIA
(22) Date of filing of Application :13/06/2021
(43) Publication Date : 16/07/2021

(54) Title of the invention : ARTIFICIAL INTELLIGENCE BASED AUTONOMOUS PEST DETECTION IN SMART AGRICULTURAL FARMS

(51) International classification	:G06Q0050020000, G06K0009620000, A01M0007000000, A01C0021000000, A01B0079000000
(31) Priority Document No	:NA
(32) Priority Date	:NA
(33) Name of priority country	:NA
(86) International Application No	:NA
Filing Date	:NA
(87) International Publication No	: NA
(61) Patent of Addition to Application Number	:NA
Filing Date	:NA
(62) Divisional to Application Number	:NA
Filing Date	:NA

(71)**Name of Applicant :**
1)Mahesh P Haldankar,Shree Rayeshwar Institute of Engineering and Information Technology
Address of Applicant :Assistant Professor Department of Mechanical Engineering, Shree Rayeshwar Institute of Engineering and Information Technology (SRIEIT) - Shiroda Goa India Goa India
2)Astha Singh Kushwaha,Dr. Rammanohar Lohia Avadh University
3)Dr T.Lalitha,Jain Deemed-to-be University
4)Dhivya .R,Dr.SNS Rajalakshmi College of Arts and Science
5)Dr Arvind Kumar Shukla,IFTM University
6)Parveen Banu N,Bapuji Institute of Engineering and Technology
7)Shaik Shafi,B V Raju Institute of Technology
8)Kakirala Durga Bhavani,SRMIST
9)Mahesh Kumar A S,PES College of Engineering
10)Rajesh A S,Maharaja Institute of Engineering
11)Mohammed Ali,Mysuru Royal Institute of Technology
(72)**Name of Inventor :**
1)Mahesh P Haldankar,Shree Rayeshwar Institute of Engineering and Information Technology
2)Astha Singh Kushwaha,Dr. Rammanohar Lohia Avadh University
3)Dr T.Lalitha,Jain Deemed-to-be University
4)Dhivya .R,Dr.SNS Rajalakshmi College of Arts and Science
5)Dr Arvind Kumar Shukla,IFTM University
6)Parveen Banu N,Bapuji Institute of Engineering and Technology
7)Shaik Shafi,B V Raju Institute of Technology
8)Kakirala Durga Bhavani,SRMIST
9)Mahesh Kumar A S,PES College of Engineering
10)Rajesh A S,Maharaja Institute of Engineering
11)Mohammed Ali,Mysuru Royal Institute of Technology

(57) Abstract :
In real time applications, Artificial Intelligence in integration with Image Processing technology is capable of providing innovative solutions required in our day to-day life. In agricultural field, maximum yield can be attained by continuous monitoring of fields protecting them from any pests affecting the fields. In this invention, we focus on autonomous pest detection using environmental sensors connected via Internet of Things for remote monitoring by the farmers through mobile applications. Image recognition of pest is done by deep learning along with Artificial Internet of Things (AIoT) for obtaining the location of the pests and the their population. The data on pest is continuously stored in memory for analyzing the effect on the agricultural fields on a continuous basis. Images of the pests are compared to detect the remedy that can be taken to make the smart agricultural fields free from pest. An accuracy of 90% is achieved from this system, where the recommended pesticides suggestions are also provided to the farmers for achieving best results. This reduces unwanted pesticides over the soil, preserving the soil from getting polluted. This works improves the agricultural economics providing the best yield.

No. of Pages : 11 No. of Claims : 6

(12) PATENT APPLICATION PUBLICATION
(19) INDIA
(22) Date of filing of Application :13/06/2021
(21) Application No.202121026292 A
(43) Publication Date : 16/07/2021

(54) Title of the invention : A LOCATION-BASED RESPONDER SYSTEM AND METHOD FOR PROVIDING EMERGENCY HELP

(51) International classification	:H04W0004900000, G08B0013196000, G06Q0050220000, H04M0003420000, H04W0076500000
(31) Priority Document No	:NA
(32) Priority Date	:NA
(33) Name of priority country	:NA
(86) International Application No	:NA
Filing Date	:NA
(87) International Publication No	: NA
(61) Patent of Addition to Application Number	:NA
Filing Date	:NA
(62) Divisional to Application Number	:NA
Filing Date	:NA

(71)**Name of Applicant :**
1)1. Mr.Aditya Shukla
Address of Applicant :A wing, 1st floor, Flat no. 05, Keshav Dham, Palghar road, Boisar- 401501 Maharashtra India
2)Mrs.Linda Mary John
3)Mrs.Anita Chaudhari
4)Mrs.Brinzel Rodrigues
5)Ms.Shraddha Subhash More
6)Mrs.Jessica Dias
7)Mr. Ahmer Usmani
8)Mr.Vivek Solavande
(72)**Name of Inventor :**
1)1. Mr.Aditya Shukla
2)Mrs.Linda Mary John
3)Mrs.Anita Chaudhari
4)Mrs.Brinzel Rodrigues
5)Ms.Shraddha Subhash More
6)Mrs.Jessica Dias
7)Mr. Ahmer Usmani
8)Mr.Vivek Solavande

(57) Abstract :
Abstract of Invention: The present invention provides a location based responder system and method for providing emergency help using big data. The proposed invention is an emergency system which provides integrated medical, police and fire emergency services. As soon as an emergency is reported, the call taker at the Emergency Response Centre (ERC) collects the required information, including location, and ships suitable emergency services; be that an ambulance, police assistance, or a fire engine. This invention can solve the major problem of the society by providing the most efficient and effective system to handle the emergency situation. Consequently, the system is capable of saving valuable lives of the people at large by reducing the risk factor caused often due to delay in medical response.

No. of Pages : 14 No. of Claims : 1

(12) PATENT APPLICATION PUBLICATION
(21) Application No.202121026340 A
(19) INDIA
(22) Date of filing of Application :14/06/2021
(43) Publication Date : 16/07/2021

(54) Title of the invention :SYSTEM-ON-CHIP CONTROLLER FOR ON-BOARD BATTERY CHARGER IN 2 AND 3 WHELLER ELECTRIC VEHICLE APPLICATIONS"

(51) International classification	:H02J0007000000, B60L0053120000, B60L0050600000, B60K0006400000, B32B0027200000	(71)**Name of Applicant :** **1)DARSHANA SANKHE** Address of Applicant :SARDAR PATEL INSTITUTE OF TECHNOLOGY,BHAVAN'S CAMPUS,ANDHERI(W), MUMBAI-400 058, MAHARASHTRA, INDIA. Maharashtra India **2)RAJENDRA SAWANT** **3)Y. SRINIVASA RAO**
(31) Priority Document No	:NA	
(32) Priority Date	:NA	
(33) Name of priority country	:NA	
(86) International Application No	:NA	(72)**Name of Inventor :** **1)DARSHANA SANKHE** **2)RAJENDRA SAWANT** **3)Y. SRINIVASA RAO**
Filing Date	:NA	
(87) International Publication No	: NA	
(61) Patent of Addition to Application Number	:NA	
Filing Date	:NA	
(62) Divisional to Application Number	:NA	
Filing Date	:NA	

(57) Abstract :
ABSTRACT SYSTEM-ON-CHIP CONTROLLER FOR ON-BOARD BATTERY CHARGER IN 2 AND 3 WHEELER ELECTRIC VEHICLE APPLICATIONS The invention is a System-on-chip (SoC) controller for the on-board battery charging system used in two and three-wheeler EVs, which ensures higher efficiency at all loading conditions and also maintains the unity power factor at the utility grid. As the battery state-of-charge (SOC) increases, the controller automatically switches from constant current (CC) control mode to constant voltage (CV) control mode, seamlessly with phase shift control technique as per the requirements of EV battery charger. At the same time, the resonant converter's soft switching condition is maintained at all load conditions by frequency control over a narrow range to achieve reduced EMI and higher efficiency towards enhanced reliability. To meet the recommended practice of IEEE Std 141-1993, the unity power factor is maintained using a Dead-Beat Current control method. Both, the control-tasks of the Power Factor Correction (PFC) and battery charging are embedded onto the single reconfigurable and reprogrammable FPGA platform to achieve higher synergy in control of both the converters used for EV battery-chargers. This increases reliability of the control hardware, reduces latency and exhibits high speed of operation, thus suitable for all real-time applications.

No. of Pages : 19 No. of Claims : 9

(12) PATENT APPLICATION PUBLICATION
(21) Application No.202121026358 A
(19) INDIA
(22) Date of filing of Application :14/06/2021
(43) Publication Date : 16/07/2021

(54) Title of the invention :AN IMPROVED CEMENT CONCRETE AND METHOD OF PREPARATION OF THEREOF"

(51) International classification	:C04B0028020000, C08F0008320000, A61F0002300000, C08F0008480000, C04B0041000000
(31) Priority Document No	:NA
(32) Priority Date	:NA
(33) Name of priority country	:NA
(86) International Application No	:NA
Filing Date	:NA
(87) International Publication No	: NA
(61) Patent of Addition to Application Number	:NA
Filing Date	:NA
(62) Divisional to Application Number	:NA
Filing Date	:NA

(71)**Name of Applicant :**
1)ARPIT SHAILESH VYAS
Address of Applicant :C/O. DR. B.K. MISHRA, PRINCIPAL THAKUR COLLEGE OF ENGINEERING & TECHNOLOGY, SHYAMNARAYAN THAKUR MARG, THAKUR VILLAGE, KANDIVALI (EAST), MUMBAI-400101, MAHARASHTRA, INDIA. Maharashtra India
(72)**Name of Inventor :**
1)ARPIT SHAILESH VYAS
2)SAYLI PRASHANT RAUT
3)SHREYA TODMAL
4)JANHAVI PATIL
5)SHUBHAM SINGH

(57) Abstract :
Abstract,An improved cement concrete and method of preparation of thereof;" In an aspect of invention, it is provided a nanoparticle of metals includes Cu, Zn, Sn are prepared biologically and added in an amount to cement concrete to replace amount of cement equivalent of its addition, therefore result for compressive strength is improved which is indicate 18% to 20% increase in the compressive strength as opposed to the conventional concrete, In the other aspect of the invention a method for preparation of metal nanoparticles is provided by biological material, which is selected as Mango leaves, the bio-extract obtained from Mango leaves is used as bio reducing agent for preparation of Cu, Zn, Sn nanoparticles for making nanoconcrete.

No. of Pages : 13 No. of Claims : 10

(12) PATENT APPLICATION PUBLICATION
(21) Application No.202121026359 A
(19) INDIA
(22) Date of filing of Application :14/06/2021
(43) Publication Date : 16/07/2021

(54) Title of the invention :AN IMPROVED CEMENT CONCRETE AND METHOD OF PREPARATION OF THEREOF"

(51) International classification	:C04B0028020000, C08F0008320000, A61F0002300000, C08F0008480000, C04B0041000000
(31) Priority Document No	:NA
(32) Priority Date	:NA
(33) Name of priority country	:NA
(86) International Application No	:NA
Filing Date	:NA
(87) International Publication No	: NA
(61) Patent of Addition to Application Number	:NA
Filing Date	:NA
(62) Divisional to Application Number	:NA
Filing Date	:NA

(71)**Name of Applicant :**
1)MR. PRASHANT RAMAKANT NARAYANE
Address of Applicant :C/O. DR. B.K. MISHRA, PRINCIPAL THAKUR COLLEGE OF ENGINEERING & TECHNOLOGY, SHYAMNARAYAN THAKUR MARG, THAKUR VILLAGE, KANDIVALI (EAST), MUMBAI-400101, MAHARASHTRA, INDIA. Maharashtra India
2)SWAPNIL ARVIND RAUT
(72)**Name of Inventor :**
1)MR. PRASHANT RAMAKANT NARAYANE
2)SWAPNIL ARVIND RAUT
3)JAY DHARMESH RAISURANA
4)KARAN SUNIL PATEL
5)HEET MUKESH SHAH
6)RUSHAB ALESH MEHTA

(57) Abstract :
AbstractAn improved cement concrete and method of preparation of thereof;" In one of the aspects of the invention reinforced concrete is prepared by adding organic waste material obtained from fruits and vegetables, the fruits and vegetable waste is fermented by adding sugar or Gaggery from 90 days used as additive to increases strength and faster settling time for cement concrete, the fruits selected from citrus fruits,

No. of Pages : 11 No. of Claims : 10

(12) PATENT APPLICATION PUBLICATION
(19) INDIA
(22) Date of filing of Application :14/06/2021
(21) Application No.202121026412 A
(43) Publication Date : 16/07/2021

(54) Title of the invention : AN IMPROVED IMAGE FUSION METHOD

(51) International classification	:G06T0005500000, G06K0009620000, G06T0007330000, G06K0009000000, G02C0007060000	(71)**Name of Applicant :** **1)JAGTAP, Nalini Santosh** Address of Applicant :C4-1005 Avalon City, Dapodi, Opposite to CME Gate Pune Maharashtra India
(31) Priority Document No	:NA	(72)**Name of Inventor :** **1)JAGTAP, Nalini Santosh** **2)THEPADE, Dr. Sudeep D**
(32) Priority Date	:NA	
(33) Name of priority country	:NA	
(86) International Application No	:NA	
Filing Date	:NA	
(87) International Publication No	: NA	
(61) Patent of Addition to Application Number	:NA	
Filing Date	:NA	
(62) Divisional to Application Number	:NA	
Filing Date	:NA	

(57) Abstract :
Disclosed herein a method for an improved image fusion comprising capturing two images for fusing them by image fusion technique and obtaining one properly tuned image by using multi-modal, multi-focus and multi-exposed image fusion The method comprising fusing images by implementing algorithms of Principal Component Analysis (PCA), Discrete Wavelet Transform (DWT), and guided filter technique. The method further comprising fusing the images on a program by executing CUDA programming on MATLAB 2018 version and using the different datasets to validate the results. This method results in obtaining higher accuracy and reduces the time and space complexity.

No. of Pages : 17 No. of Claims : 10

(12) PATENT APPLICATION PUBLICATION
(21) Application No.202121026515 A
(19) INDIA
(22) Date of filing of Application :14/06/2021
(43) Publication Date : 16/07/2021

(54) Title of the invention : A WATER PURIFIER COMPOSITION

(51) International classification	:C02F0001000000, C02F0001520000, C02F0005080000, C02F0001280000, C02F0009000000
(31) Priority Document No	:NA
(32) Priority Date	:NA
(33) Name of priority country	:NA
(86) International Application No	:NA
Filing Date	:NA
(87) International Publication No	: NA
(61) Patent of Addition to Application Number	:NA
Filing Date	:NA
(62) Divisional to Application Number	:NA
Filing Date	:NA

(71)**Name of Applicant :**
1)DR. SALUNKHE, PRIYANKA VIJAY
Address of Applicant :DEPARTMENT OF CIVIL ENGINEERING, TERNA ENGINEERING COLLEGE, OPPOSITE TO RAILWAY STATION, SECTOR 22, NERUL, NAVI MUMBAI Maharashtra India
2)MR. DESHMUKH, TEJAS
3)MR. BALIP, PRATHAMESH
4)MS. KOTIAN, RIYA
5)MS. LANDGE, PRERANA
(72)**Name of Inventor :**
1)DR. SALUNKHE, PRIYANKA VIJAY
2)MR. DESHMUKH, TEJAS
3)MR. BALIP, PRATHAMESH
4)MS. KOTIAN, RIYA
5)MS. LANDGE, PRERANA
6)MR. KURKURE, RINKESH VISHNU

(57) Abstract :
ABSTRACT TITLE: A WATER PURIFIER COMPOSITION A water purifier composition is designed which purifies water and makes it drinkable by controlling pH of water, removing temporary and permanent hardness, turbidity, harmful microorganisms, controlling dissolved oxygen, BOD, COD, odor, colour and taste as per Indian Standards Code of Practice for Drinking Water. This is unique water purifier composition because of its chemical constituents and being multipurpose and economical. Accordingly, it provides a water purifier composition comprising one or more tablet containing Calcium Oxide (CaO), Sodium carbonate (Na2CO3), Titanium dioxide (TiO2), Ferric oxide (Fe2O3), Cupric oxide (CuO) and Cupric chloride (CuCl2) placed on a homogeneous mixture of charcoal and sand. Most preferably the weight percentages of Calcium Oxide (CaO), Sodium carbonate (Na2CO3), Titanium dioxide (TiO2), Ferric oxide (Fe2O3), Cupric oxide (CuO), Cupric chloride (CuCl2), charcoal and sand are 2.24%, 2.24%, 7.49%, 0.074%, 0.29%, 8.98%, 31.46%, 47.19% respectively. Refer Fig. 1

No. of Pages : 23 No. of Claims : 13

(12) PATENT APPLICATION PUBLICATION
(19) INDIA
(22) Date of filing of Application :15/06/2021

(21) Application No.202121026706 A
(43) Publication Date : 16/07/2021

(54) Title of the invention :A MACHINE LEARNING SYSTEMS FOR PREDICTING THE CANCER. •

(51) International classification	:G06K0009620000, G06N0020000000, G16H0050300000, G16H0050700000, G06N0005040000
(31) Priority Document No	:NA
(32) Priority Date	:NA
(33) Name of priority country	:NA
(86) International Application No	:NA
Filing Date	:NA
(87) International Publication No	: NA
(61) Patent of Addition to Application Number	:NA
Filing Date	:NA
(62) Divisional to Application Number	:NA
Filing Date	:NA

(71)**Name of Applicant :**
1)Dr. J Muthu Mohamed
Address of Applicant :Department of Pharmaceutical Technology, BIT campus, Anna University, Tiruchirappalli, Tamilnadu INDIA, 620024 Tamil Nadu India
2)Dr. Fazil Ahmad
3)Dr. Krishnaraju Venkatesan
4)Dr. Rasheed Ahemad Shaik
5)Dr. Tasneem Mohammed
6)Dr. Areej Dawoud
7)Mr. Aamer Abbas
8)Dr. Noohu Abdulla Khan
9)Dr. Kumarappan Chidambaram
10)Dr. Kumar Venkatesan
11)Dr.Kayamkani Abedulla Khan
(72)**Name of Inventor :**
1)Dr. J Muthu Mohamed
2)Dr. Fazil Ahmad
3)Dr. Krishnaraju Venkatesan
4)Dr. Rasheed Ahemad Shaik
5)Dr. Tasneem Mohammed
6)Dr. Areej Dawoud
7)Mr. Aamer Abbas
8)Dr. Noohu Abdulla Khan
9)Dr. Kumarappan Chidambaram
10)Dr. Kumar Venkatesan
11)Dr.Kayamkani Abedulla Khan

(57) Abstract :
The machine learning systems for predicting the diseases of cancer is comprising artificial intelligence/device getting to know system for studying records and making predictions based upon the information, and extra specially, to predicting the chance or danger for having a ailment along with most cancers, particularly in an in any other case asymptomatic or vaguely symptomatic patient. More particularly present invention relates to the cancer prediction system and its method to perform by device. Also the providing a notification to the person recommending diagnostic checking out while the patient is classified into the category indicative of a likelihood of getting most cancers on attachment and connected device to smart device as per feed programming. Wherein iteratively regenerating the classifier does not meet the predetermined ROC statistic, via the use of a different subset of inputs and/or with the aid of adjusting the associated weights of the inputs until the regenerated classifier.

No. of Pages : 27 No. of Claims : 10

(12) PATENT APPLICATION PUBLICATION
(21) Application No.202121026748 A
(19) INDIA
(22) Date of filing of Application :16/06/2021
(43) Publication Date : 16/07/2021

(54) Title of the invention : A VARIABLE RESOLUTION DIGITAL ARCHITECTURE RECONFIGURABLE FOR MULTIPLE ANALOG TO DIGITAL CONVERTERS USING STRUCTURAL APPROACH AND METHOD THEREFOR

(51) International classification	:H03M0001000000, H03M0001120000, G01T0001290000, H03M0001160000, G06F0012020000	(71)**Name of Applicant :**
(31) Priority Document No	:NA	**1)UMASHANKAR RAMCHANDRA MORE**
(32) Priority Date	:NA	Address of Applicant :B-301, SAI MYSTIQUE, AMBEGAON (BK), PUNE - 411046, MAHARASHTRA, INDIA. Maharashtra India
(33) Name of priority country	:NA	**2)SANJAY NILKANTH TALBAR**
(86) International Application No	:NA	**3)AJAY DADASAHEB JADHAV**
Filing Date	:NA	(72)**Name of Inventor :**
(87) International Publication No	: NA	**1)UMASHANKAR RAMCHANDRA MORE**
(61) Patent of Addition to Application Number	:NA	**2)SANJAY NILKANTH TALBAR**
Filing Date	:NA	**3)AJAY DADASAHEB JADHAV**
(62) Divisional to Application Number	:NA	
Filing Date	:NA	

(57) Abstract :
ABSTRACT A VARIABLE RESOLUTION DIGITAL ARCHITECTURE RECONFIGURABLE FOR MULTIPLE ANALOG TO DIGITAL CONVERTERS USING STRUCTURAL APPROACH AND METHOD THEREFOR Revealed are a a variable resolution digital architecture reconfigurable for multiple analog to digital converters using structural approach and method therefor. The architecture (10) comprises four blocks viz. eoc & control signal generator (15), resolution control (16) block, reset signal generator (17) and reconfigurable data unit (18) operated on clock (13), reset (14), instruction from the central controlling and processing unit of Microprocessor/SoC in which it can be embodied (11) and comparator output (12). Where, comparator is not apart of present invention. The architecture (10) realized with structural process, wherein aforesaid blocks are designed at gate level abstraction, keeping the area optimization level high. The architecture (10) is clock (13) synchronized and operates with a hardwired reset (14) signal. The architecture (10) is reconfigurable for multiple ADCs specifically, dual slope, SAR and folded pipeline ADC. It also can reduce a burden on number of external comparators to be used. With present invention, there will be requirement of one external comparator. The architecture (10) is functionally plural according to the configuration of aforesaid types of ADCs, application diversity of the Microcontroller or SoC will be increased with this architecture (10) at the cost of gate level realization complexity.

No. of Pages : 16 No. of Claims : 14

(12) PATENT APPLICATION PUBLICATION
(21) Application No.202121026968 A
(19) INDIA
(22) Date of filing of Application :17/06/2021
(43) Publication Date : 16/07/2021

(54) Title of the invention : DESIGN AND DEVELOPMENT OF INNOVATIVE MODULAR BRICKS MADE BY USING SCBA AND C&D WASTE.

(51) International classification	:C04B0028020000, C04B0020020000, C04B0018080000, C04B0018120000, B09B0003000000
(31) Priority Document No	:NA
(32) Priority Date	:NA
(33) Name of priority country	:NA
(86) International Application No	:NA
Filing Date	:NA
(87) International Publication No	: NA
(61) Patent of Addition to Application Number	:NA
Filing Date	:NA
(62) Divisional to Application Number	:NA
Filing Date	:NA

(71)**Name of Applicant :**
1)Samruddhi Dhanaji Patil
Address of Applicant :Plot no 6,B ward, 803/1,Rajiv Gandhi Nagar,Kalamba ,kolhapur-416007 Maharashtra India
2)Rinkita Dipak Tayade
3)Mr.Swapnil Balkrishna Gorade
4)Vivekanand Arun Naikwadi
(72)**Name of Inventor :**
1)Samruddhi Dhanaji Patil
2)Rinkita Dipak Tayade
3)Mr.Swapnil Balkrishna Gorade

(57) Abstract :
Abstract: The Present disclosure is related to Sugarcane bagasse ash (SCBA) is the waste from combustion process and is mostly disposed of as landfill or dumped in water bodies, adding to the pollution. This ash is produced by controlled burning of sugarcane bagasse between 120oC to 800oC. After burning bagasse, it gives amorphous silica which has pozzolanic properties and hence SCBA can be used as a cementitious material. Recently India facing problems related to sand extraction, as sand is the 2nd most consumed natural resource after water but due to sand extraction in large amount it leads rivers to dry and having impact on the planet™s health also natural sand becoming very costly material because of its demand in construction industry so there is need to find an effective alternative for natural sand hence in this paper, natural sand is completely replaced with construction and demolition (C&D) aggregates. SCBA is used as a cementations material and fine aggregate both. The present paper investigates the physical and mechanical properties of bricks made by untreated sugarcane bagasse ash (SCBA) and C&D waste. The only post-treatment was to sieve SCBA through No. 300 sieve. Modular bricks were manufactured by using cement as a binder. As a invention focus on method of manufacturing the innovative modular bricks.

No. of Pages : 12 No. of Claims : 10

(12) PATENT APPLICATION PUBLICATION
(21) Application No.202121027003 A
(19) INDIA
(22) Date of filing of Application :17/06/2021
(43) Publication Date : 16/07/2021

(54) Title of the invention : INNOVATIVE MECHANISM FOR STABILIZING THE OSCILLATIONS OF PASSIVE YAW IN WIND TURBINES.

(51) International classification	:F03D0007020000, F03D0080000000, F03D0007000000, F03D0007040000, F03D0001060000
(31) Priority Document No	:NA
(32) Priority Date	:NA
(33) Name of priority country	:NA
(86) International Application No	:NA
Filing Date	:NA
(87) International Publication No	: NA
(61) Patent of Addition to Application Number	:NA
Filing Date	:NA
(62) Divisional to Application Number	:NA
Filing Date	:NA

(71)**Name of Applicant :**
1)Mohan Pandurang Khond
Address of Applicant :C-1,503,Ecstasy,Uttam town Scape,Near seren hospital Yerwada Pune 411006 Maharashtra India
2)Aayush Kaul
3)Juber Firoj Shaikh
4)Salman Shakil Shaikh
5)Sohel Shakil Shaikh
6)Vivekanand Arun Naikwadi
(72)**Name of Inventor :**
1)Mohan Pandurang Khond
2)Aayush Kaul
3)Juber Firoj Shaikh
4)Salman Shakil Shaikh
5)Sohel Shakil Shaikh

(57) Abstract :
Abstract- In general, wind turbines are designed to maximise their power output across the whole operational range of wind speeds. Several servo systems, such as pitch and yaw control, are incorporated in the design as control systems to ensure proper and safe operation at all possible wind speeds. These mechanisms are mechanically or hydraulically operated in earlier turbines. Passive Yaw mechanisms are extensively used in small horizontal axis wind turbines to orient their rotor plane perpendicular to the wind. Passive yaw is a simple and inexpensive way to yaw. However, due to inertia of the yawing assembly, vortex shedding across the tail vane, wind fluctuations, and other factors, turbines with passive yaw experience frequent small oscillations about the yaw axis (also known as yaw oscillations), reducing the service life and performance of small wind turbines. In this work, a novel mechanism for damping such yaw oscillations and thereby stabilizing the passive-yaw-based small wind turbine is provided. The mechanism is meticulously designed to provide gradually increasing damping force as the turbine rotor plane goes on becoming perpendicular to the wind direction.The mechanism is capable of stabilizing the yaw oscillations by a simple, economical and completely mechanical arrangement without needing any kind of external power source.

No. of Pages : 17 No. of Claims : 6

(12) PATENT APPLICATION PUBLICATION
(21) Application No.202121027241 A
(19) INDIA
(22) Date of filing of Application :18/06/2021
(43) Publication Date : 16/07/2021

(54) Title of the invention : A PROCESS FOR PREPARING STABLE LOCALLY ACTING SUSTAINED RELEASE COMPOSITION OF MELATONIN •

(51) International classification	:A61K0031404500, C08J0003075000, C01B0037020000, A01N0037100000, A61L0015600000	(71)**Name of Applicant :** **1)DR. SUREKHA RATHOD** Address of Applicant :A-20, Mhalgi Nagar, Ring Road, Nagpur 440034, Maharashtra Maharashtra India **2)DR. NOOPUR GONDE** **3)DR. SRUSHTI DHANDE**
(31) Priority Document No	:NA	
(32) Priority Date	:NA	(72)**Name of Inventor :**
(33) Name of priority country	:NA	**1)DR. SUREKHA RATHOD**
(86) International Application No	:NA	**2)DR. NOOPUR GONDE**
Filing Date	:NA	**3)DR. SRUSHTI DHANDE**
(87) International Publication No	: NA	
(61) Patent of Addition to Application Number	:NA	
Filing Date	:NA	
(62) Divisional to Application Number	:NA	
Filing Date	:NA	

(57) Abstract :
Disclosed is a process for preparing stable locally acting sustained release composition of melatonin comprising: i) the steps of preparing a aqueous solution by adding copolymer of sodium acrylate and acrylamide in water and subjecting the said addition for stirring up to 5 minutes at room temperature; ii) dissolving the melatonin in ethanol; iii) adding step (i) & (ii) in order to obtain a mixture and subjecting the said mixture for stirring in order to form an viscous product; & iv) adding the preservative to the product as obtained in step (iii). Fig.1

No. of Pages : 26 No. of Claims : 10

(12) PATENT APPLICATION PUBLICATION
(21) Application No.202041001571 A
(19) INDIA
(22) Date of filing of Application :14/07/2020
(43) Publication Date : 16/07/2021

(54) Title of the invention : PROCESS FOR PRODUCING - ALANINE IN CELL FREE SYSTEM/ENZYMATIC BIO-TRANSFORMATION

(51) International classification	:C12P0021020000, C12N0015520000, G06F0003048400, C12P0019340000, C12N0009000000
(31) Priority Document No	:NA
(32) Priority Date	:NA
(33) Name of priority country	:NA
(86) International Application No	:NA
Filing Date	:NA
(87) International Publication No	: NA
(61) Patent of Addition to Application Number	:NA
Filing Date	:NA
(62) Divisional to Application Number	:NA
Filing Date	:NA

(71)**Name of Applicant :**
1)ANNA UNIVERSITY, CHENNAI
Address of Applicant :THE DIRECTOR, CENTRE FOR INTELLECTUAL PROPERTY RIGHTS(CIPR), CPDE BUILDING, COLLEGE OF ENGINEERING,SARDAR PATEL ROAD, GUINDY, ANNA UNIVERSITY, CHENNAI-600 025. Tamil Nadu India
(72)**Name of Inventor :**
1)S.RAMALINGAM
2)ANITHA JANET ROSHNI.Y
3)SHANTHI
4)AKILA
5)PADMAPRIYA.G
6)TAMILSELVAN

(57) Abstract :
N/A

No. of Pages : 26 No. of Claims : 10

(12) PATENT APPLICATION PUBLICATION
(21) Application No.202041025339 A
(19) INDIA
(22) Date of filing of Application :16/07/2020
(43) Publication Date : 16/07/2021

(54) Title of the invention : APPARATUS FOR IMPLEMENTING DYNAMIC, DATA-DEPENDENT PARALLELISM FOR TASK EXECUTION BASED ON AN EXECUTION MODEL

(51) International classification	:G06F0009540000, G06F0009520000, G06F0011360000, G06F0009380000, G06F0008410000	(71)**Name of Applicant :** **1)MORPHING MACHINES PVT. LTD** Address of Applicant :17, 10TH-A MAIN, 16TH CROSS, MALLESWARAM, BANGALORE 560055, INDIA Karnataka India
(31) Priority Document No	:NA	(72)**Name of Inventor :**
(32) Priority Date	:NA	**1)CHEMBATI MADHAVA KRISHNA**
(33) Name of priority country	:NA	**2)RANJANI NARAYAN**
(86) International Application No	:NA	
Filing Date	:NA	
(87) International Publication No	: NA	
(61) Patent of Addition to Application Number	:NA	
Filing Date	:NA	
(62) Divisional to Application Number	:NA	
Filing Date	:NA	

(57) Abstract :
Provided is an apparatus (400) for implementing dynamic, data-dependent parallelism for task execution based on a macro dataflow execution model (412). The execution model (412) defines a plurality of high-level abstractions that determine the behavior of a plurality of hardware components of the apparatus (400). The execution model (412) defines primitive operations that enable the runtime construction of a hyperOp dependence graph (HDG) (416) for applications. The execution model (412) defines primitive operations that enable configuring two distinct address spaces of a memory (402) as a global memory (404) for shared memory communication and a context memory (406) for synchronization. A runtime system (420) of the execution model (412) defines functionalities that are implemented in an orchestrator (410) to manage execution of unordered hyperOp instances in parallel and directly load operands of a hyperOp instance from an associated context frame into a register file of a compute element (CE).

No. of Pages : 68 No. of Claims : 10

(12) PATENT APPLICATION PUBLICATION
(21) Application No.202041028329 A
(19) INDIA
(22) Date of filing of Application :03/07/2020
(43) Publication Date : 16/07/2021

(54) Title of the invention : MELALEUCA ALTERIFOLIA PLANT BASED ANTIMICROBIAL FINISH ON FABRICS AND METHOD THEREOF

(51) International classification	:A61K0036610000, C11D0017000000, A61L0015460000, G01N0021840000, A61P0031040000	(71)**Name of Applicant :** **1)D. VIKRAM KRISHNA** Address of Applicant :KG House, 126 Arts College Road, Coimbatore. Tamil Nadu India (72)**Name of Inventor :** **1)D. VIKRAM KRISHNA**
(31) Priority Document No	:NA	
(32) Priority Date	:NA	
(33) Name of priority country	:NA	
(86) International Application No	:NA	
Filing Date	:NA	
(87) International Publication No	: NA	
(61) Patent of Addition to Application Number	:NA	
Filing Date	:NA	
(62) Divisional to Application Number	:NA	
Filing Date	:NA	

(57) Abstract :
The present invention relates to an anti-microbial finish on the fabrics. The present invention particularly relates to an antimicrobial microencapsulated fabric finish composition comprising Melaleuca alterifolia oil or tea tree oil. The invention relates to microcapsules of Melaleuca alterifolila microcapsules with Melamine as coat. Further the invention relates to method of finishing of fabric with antimicrobial composition of tea tree oil microcapsules, to provide a durable and anti-microbial fabric, wherein the fabric is preferably terry towel and woven plain fabrics like sheetings and bed linen.

No. of Pages : 25 No. of Claims : 8

(12) PATENT APPLICATION PUBLICATION
(21) Application No.202041028714 A
(19) INDIA
(22) Date of filing of Application :06/07/2020
(43) Publication Date : 16/07/2021

(54) Title of the invention : ARMOURED HULL ON VEHICLE TO PROTECT OCCUPANTS IN VEHICLE

(51) International classification	:F41H0007040000, B60R0021231000, F41H0005220000, F41H0007020000, F41H0005013000	(71)**Name of Applicant :** **1)BEML Limited** Address of Applicant :BEML Soudha, 23/1, 4th Main, Sampangirama Nagar, Bengaluru - 560 027, Karnataka, India Karnataka India
(31) Priority Document No	:NA	(72)**Name of Inventor :**
(32) Priority Date	:NA	**1)RAJU, M Ramesh Kumar**
(33) Name of priority country	:NA	**2)AVIDI, Jagadish Raj Kumar**
(86) International Application No	:NA	
Filing Date	:NA	
(87) International Publication No	: NA	
(61) Patent of Addition to Application Number	:NA	
Filing Date	:NA	
(62) Divisional to Application Number	:NA	
Filing Date	:NA	

(57) Abstract :
Present subject matter relates to an armoured hull around the vehicle frame to protect the vehicle occupants from explosive forces and materials, in particular when explosives are positioned on or under the ground such that a vehicle passing over it would be exposed to blast or explosion. The armoured hull acts as shield during blast and minimizes injuries to occupants present in vehicle. The armoured hull is made from steel material and the armoured hull provides adequate space for the free movement of the occupants during their operational maneuvers.

No. of Pages : 11 No. of Claims : 7

(12) PATENT APPLICATION PUBLICATION
(21) Application No.202041030086 A
(19) INDIA
(22) Date of filing of Application :15/07/2020
(43) Publication Date : 16/07/2021

(54) Title of the invention : METHOD OF PRODUCING AMMONIUM CARBAMATE FROM CARBON-DIOXIDE AND AMMONIA IN A NON-AQUEOUS SOLVENT

(51) International classification	:C01B0021120000, C07C0273040000, C01C0001260000, C10L0003100000, C09D0167020000	(71)**Name of Applicant :** **1)ANNA UNIVERSITY, CHENNAI** Address of Applicant :The Director, Centre for Intellectual Property Rights (CIPR), CPDE Building, College ofEngineering Guindy, Anna University, Chennai-600025 Tamil Nadu India
(31) Priority Document No	:NA	(72)**Name of Inventor :**
(32) Priority Date	:NA	**1)K. PALMIIVELU**
(33) Name of priority country	:NA	**2)SACHIN KURIACHAN. E**
(86) International Application No	:NA	**3)A.RAMACHANDRAN**
Filing Date	:NA	
(87) International Publication No	: NA	
(61) Patent of Addition to Application Number	:NA	
Filing Date	:NA	
(62) Divisional to Application Number	:NA	
Filing Date	:NA	

(57) Abstract :
Not Submitted..

No. of Pages : 19 No. of Claims : 5

(12) PATENT APPLICATION PUBLICATION
(19) INDIA
(22) Date of filing of Application :04/09/2020
(21) Application No.202047038280 A
(43) Publication Date : 16/07/2021

(54) Title of the invention : TOY BUILDING BLOCKS

(51) International classification	:B60K0007000000, E04B0002860000, A63H0033100000, A63H0033060000, A61F0002000000
(31) Priority Document No	:PA 2019 01155
(32) Priority Date	:02/10/2019
(33) Name of priority country	:Denmark
(86) International Application No	:PCT/DK2020/050191
Filing Date	:25/06/2020
(87) International Publication No	:WO 2021/063459
(61) Patent of Addition to Application Number	:NA
Filing Date	:NA
(62) Divisional to Application Number	:NA
Filing Date	:NA

(71)**Name of Applicant :**
1)PLUS-PLUS A/S
Address of Applicant :Borupvej 20 4300 Holb¦k Denmark
(72)**Name of Inventor :**
1)PIHL, Jens Martin

(57) Abstract :
The invention relates to a toy building block system (100) comprising one or more building blocks (200); and one or more wheels (300); wherein each said building block (200) comprises: a first elongate portion (2) extending in a longitudinal direction (X); a second elongate portion (4) extending in said longitudinal direction (X); an intermediate portion (6) connecting said first elongate portion (2) with said second elongate portion (4) at a middle position (8) thereof; a first end portion (10) extending in a transverse direction (Y), perpendicular to said longitudinal direction (X), from said first elongate portion (2), at a side thereof opposite to said intermediate portion (6), and at a middle position thereof; a second end portion (12) extending in said transverse direction (Y), perpendicular to said longitudinal direction (X), from said second elongate portion (4), at a side opposite to said intermediate portion (6), and at a middle position thereof; said building block thereby comprises six protrusions (14) and two voids (16), wherein each void (16) is being defined between an end of said first elongate portion (2) and an end of said second elongate portion (4). wherein each said wheel (300) comprises a hub (18); and a wheel rim (20); wherein said wheel rim (20) is surrounding said hub (18); and wherein said wheel rim (20) is being attached to said hub (18) in such a way that said wheel rim is configured to be able to swivel around a rotational axis (A) in relation to said hub; wherein said hub (18) at a centre (22) thereof comprises a hole (24) extending in an axial direction (A); wherein the dimensions and geometry of said hole (24) are adapted to the dimensions and geometry of one of said protrusions (14) of said building block (200); so as to be able to accommodate said protrusion (14) and thereby hold said protrusion (14) of said building block (200) in place in said hole (24) of said hub (18) solely by friction.

No. of Pages : 20 No. of Claims : 39

(12) PATENT APPLICATION PUBLICATION
(19) INDIA
(22) Date of filing of Application :09/10/2020
(21) Application No.202047044089 A
(43) Publication Date : 16/07/2021

(54) Title of the invention : ANTI-SARS-COV-2-SPIKE GLYCOPROTEIN ANTIBODIES AND ANTIGEN-BINDING FRAGMENTS

(51) International classification	:A61K0039000000, C07K0016100000, C07K0016280000, A61P0031200000, A61P0031180000
(31) Priority Document No	:63/004312
(32) Priority Date	:02/04/2020
(33) Name of priority country	:U.S.A.
(86) International Application No	:PCT/US2020/039707
Filing Date	:25/06/2020
(87) International Publication No	:WO 2021/045836
(61) Patent of Addition to Application Number	:NA
Filing Date	:NA
(62) Divisional to Application Number	:NA
Filing Date	:NA

(71)**Name of Applicant :**
1)REGENERON PHARMACEUTICALS, INC.
Address of Applicant :777 Old Saw Mill River Road Tarrytown, New York 10591 U.S.A.
(72)**Name of Inventor :**
1)BABB, Robert
2)BAUM, Alina
3)CHEN, Gang
4)GERSON, Cindy
5)HANSEN, Johanna
6)HUANG, Tammy
7)KYRATSOUS, Christos
8)LEE, Wen-Yi
9)MALBEC, Marine
10)MURPHY, Andrew
11)OLSON, William
12)STAHL, Neil
13)YANCOPOULOS, George, D.

(57) Abstract :
The present disclosure provides antibodies and antigen-binding fragments thereof that bind specifically to a coronavirus spike protein and methods of using such antibodies and fragments for treating or preventing viral infections (e.g., coronavirus infections). The present disclosure provides neutralizing human antigen-binding proteins that specifically bind to SARS-CoV-2-S, for example, antibodies or antigen-binding fragments thereof.

No. of Pages : 219 No. of Claims : 69

(12) PATENT APPLICATION PUBLICATION
(19) INDIA
(22) Date of filing of Application :26/10/2020
(21) Application No.202047046552 A
(43) Publication Date : 16/07/2021

(54) Title of the invention : PAINT DRYING DEVICE

(51) International classification	:D06F0058300000, D06F0025000000, F16H0057040000, B05B0005160000, A61C0001050000
(31) Priority Document No	:2019-157279
(32) Priority Date	:29/08/2019
(33) Name of priority country	:Japan
(86) International Application No	:PCT/JP2020/026738
Filing Date	:08/07/2020
(87) International Publication No	:WO 2021/039140
(61) Patent of Addition to Application Number	:NA
Filing Date	:NA
(62) Divisional to Application Number	:NA
Filing Date	:NA

(71)**Name of Applicant :**
1)TAIKISHA LTD.
Address of Applicant :17-1, Nishishinjuku 8-chome, Shinjuku-ku, Tokyo 1606129 Japan
(72)**Name of Inventor :**
1)GOTO Masayuki
2)KOIKE Toshihiko
3)NAKAJIMA Hisao

(57) Abstract :
This invention securely prevents air from leaking in and out between a drying chamber and a drive unit accommodation chamber. A paint drying device in which a drying chamber and a drive unit accommodation chamber 4 communicate with each other via a through hole 11 through which a power transmitting member is passed, wherein an air supply passage fs for supplying air A outside the drying chamber to the drive unit accommodation chamber 4 by an air supply fan Fs, and an air discharge passage fe for discharging the air A in the drive unit accommodation chamber 4 to the outside of the drying chamber by an air discharge fan Fe are provided, and an air volume ratio adjusting device Qse that adjusts the ratio between the air volume qs of the air A supplied into the drive unit accommodation chamber 4 through the air supply passage fs and the air volume qe of the air A discharged from the drive unit accommodation chamber 4 through the exhaust air passage fe is provided.

No. of Pages : 28 No. of Claims : 10

(12) PATENT APPLICATION PUBLICATION
(21) Application No.202141006514 A
(19) INDIA
(22) Date of filing of Application :16/02/2021
(43) Publication Date : 16/07/2021

(54) Title of the invention : INTENSIFICATION OF MECHANICAL PROPERTIES OF CEMENT COMPOSITES USING CARBON MATERIALS

(51) International classification	:B82Y0040000000, C10M0125020000, C01B0032194000, C01B0032198000, C01B0032230000
(31) Priority Document No	:NA
(32) Priority Date	:NA
(33) Name of priority country	:NA
(86) International Application No	:NA
Filing Date	:NA
(87) International Publication No	: NA
(61) Patent of Addition to Application Number	:NA
Filing Date	:NA
(62) Divisional to Application Number	:NA
Filing Date	:NA

(71)**Name of Applicant :**
1): Mr. JAYACHANDRA
Address of Applicant :Maruthi Nilaya, Adarsha Nagara, Tumkur, India, 572103 Karnataka India
2)Dr. Y. RAMALINGA REDDY
(72)**Name of Inventor :**
1): Mr. JAYACHANDRA
2)Dr. Y. RAMALINGA REDDY
3): Dr. HAREESH K
4)Mr. YASHWANTH H J

(57) Abstract :
Carbon nano materials have huge impact on mechanical properties of cement composites due to their distinct physical and chemical properties offering significant advantages to improve the bonding nature with cement. Herein we reported preparation of carbon quantum dots by hydrothermal method using glucose, Further cement mortar encompassing carbon quantum dots. Addition of CQD from 0.005wt% to 0.030wt% in cement mortar obtained increase in compressive strength of cement mortar by 7% to 63%. Maximum strength achieved at 0.025wt% addition of CQD in cement mortar, The developed carbon quantum dot cement structures are having good dispersibility than other conventional compounds. The compressive strength of the carbon quantum dot cement mortar mix is shown better performance.

No. of Pages : 7 No. of Claims : 5

(12) PATENT APPLICATION PUBLICATION
(21) Application No.202141010999 A
(19) INDIA
(22) Date of filing of Application :15/03/2021
(43) Publication Date : 16/07/2021

(54) Title of the invention : A PNEUMATIC SPINDLE DRIVE

(51) International classification	:B65H0075240000, D01H0004020000, F02N0007080000, B60K0006120000, F04B0041020000	(71)**Name of Applicant :** **1)1. WYYURU AMARNATH** Address of Applicant :5,FIRST AVENUE INDRA NAGAR ADAYAR, CHENNAI TAMILNADU INDIA 600020 Tamil Nadu India
(31) Priority Document No	:NA	**2)WYYURU KARTHICK**
(32) Priority Date	:NA	**3)WYYURU ANJANAA**
(33) Name of priority country	:NA	(72)**Name of Inventor :**
(86) International Application No	:PCT//	**1)1. WYYURU AMARNATH**
Filing Date	:01/01/1900	**2)WYYURU KARTHICK**
(87) International Publication No	: NA	**3)WYYURU ANJANAA**
(61) Patent of Addition to Application Number	:NA	
Filing Date	:NA	
(62) Divisional to Application Number	:NA	
Filing Date	:NA	

(57) Abstract :
A PNEUMATIC SPINDLE DRIVE A pneumatic spindle drive for textile spindle, comprising the arrangement of aluminium spindle(1) mounted onto an air motor(4) and the assembly of the spindle is mounted on the spindle bed or rail as usual and the spindle turns at high speed when compressed air is fed into the air motor via the common inlet rail, received from an air tank that in turn is filled by an air compressor; a pneumatic or air motor(4) used to drive the individual spindles, a common rail is provided along the spinning frame to bring the compressed air to the individual spindles, Compressed air at 95 to 105 psi from an air tank that is fed by an air compressor is fed into the individual air motor(4) which spins the core spindle; the core is mounted with a suitable tapering tube on which a paper or plastic tube is capable of being inserted, and the yarn is wound on it.

No. of Pages : 18 No. of Claims : 7

(12) PATENT APPLICATION PUBLICATION
(21) Application No.202141011235 A
(19) INDIA
(22) Date of filing of Application :16/03/2021
(43) Publication Date : 16/07/2021

(54) Title of the invention : A SYSTEM AND METHOD FOR PARALLEL PRE-PROCESSED DIGITAL PHOTOGRAPHY FROM BOTH FRONT AND BACK CAMERAS

(51) International classification	:G06K0009000000, H04N0005232000, H04N0005247000, H04N0005225000, H04N0007180000	(71)**Name of Applicant :** **1)Vaibhav Waghmare** Address of Applicant :#C815, Risinia, Trendila, Bachupally, Hyderabad (INDIA). Telangana India **2)Sandhya Waghmare**
(31) Priority Document No	:NA	(72)**Name of Inventor :**
(32) Priority Date	:NA	**1)Vaibhav Waghmare**
(33) Name of priority country	:NA	**2)Sandhya Waghmare**
(86) International Application No	:PCT//	
Filing Date	:01/01/1900	
(87) International Publication No	: NA	
(61) Patent of Addition to Application Number	:NA	
Filing Date	:NA	
(62) Divisional to Application Number	:NA	
Filing Date	:NA	

(57) Abstract :
The present invention discloses a system and method for parallel pre-processed digital photography from both one or more front and back cameras, which comprises an image capturing device with a memory, an audio-video processing module, and a user interface; and at least one processor operative to: capturing, an image or video from the at least one front camera and/or at least one back camera; detecting, an object in the image or video by an object detection module; capturing, another background scene image or video from any front or back cameras; mixing, detected object from the all front cameras with the captured scene from the back cameras; aligning, object detected from the front cameras in the scene detected from the back cameras and the vice-versa; superimposing the captured images into a composite image from the back camera and the front camera. Accompanied Drawing [FIG. 1]

No. of Pages : 33 No. of Claims : 29

(12) PATENT APPLICATION PUBLICATION
(21) Application No.202141013204 A
(19) INDIA
(22) Date of filing of Application :25/03/2021
(43) Publication Date : 16/07/2021

(54) Title of the invention : Chip Based Regenerative Medicine

(51) International classification	:A61Q0019080000, A61K0035120000, A61L0027380000, A61K0035340000, A61N0005060000	(71)**Name of Applicant :** **1)Bharath Institute of Higher Education and Research** Address of Applicant :No.173, Agharam road, Selaiyur, Chennai - 600073. Tamil Nadu India (72)**Name of Inventor :** **1)Dr. Rajesh**
(31) Priority Document No	:NA	
(32) Priority Date	:NA	
(33) Name of priority country	:NA	
(86) International Application No	:PCT//	
Filing Date	:01/01/1900	
(87) International Publication No	: NA	
(61) Patent of Addition to Application Number	:NA	
Filing Date	:NA	
(62) Divisional to Application Number	:NA	
Filing Date	:NA	

(57) Abstract :
ABSTRACT Chip Based Regenerative Medicine Regenerative Medicine is working to restore structure and function of damaged tissues and organs. It is also working to create solutions for organs that become permanently damaged. Regenerating medicine can regenerate the damaged cells in the tissue or organs by the chemicals in the chip and this medicine replaces the damaged cell by the new cells and it regulates the cells for the processes. These medicines heal the damaged cells and produce new cell during the absence of cells. This regenerated cells or tissues are grown under controlled monitoring system. Regenerative medicines are capable of generating all types of cells and tissues. This medicine can be used for regenerate any cells, organs and tissues in the body inside the host cell and it produces the new cells regularly and it protects the cells to accumulate in the body or damage by the deficiency.

No. of Pages : 17 No. of Claims : 1

(12) PATENT APPLICATION PUBLICATION
(21) Application No.202141014723 A
(19) INDIA
(22) Date of filing of Application :29/03/2021
(43) Publication Date : 16/07/2021

(54) Title of the invention : A NOVEL HERBAL DISINFECTING COMPOSITION AND DISPENSING DEVICE THEREOF

(51) International classification	:B05C0005020000, B05C0011100000, A61K0036906600, E03D0009030000, A47L0015440000	(71)**Name of Applicant :** **1)KARUNYA INSTITUTE OF TECHNOLOGY AND SCIENCES** Address of Applicant :KARUNYA NAGAR, COIMBATORE. Tamil Nadu India
(31) Priority Document No	:NA	(72)**Name of Inventor :**
(32) Priority Date	:NA	**1)Dr.JIBU THOMAS**
(33) Name of priority country	:NA	**2)Dr.S.THOMAS GEORGE**
(86) International Application No	:NA	**3)Dr.D.NARAIN PONRAJ**
Filing Date	:NA	**4)JOSEPH CHINNADURAI**
(87) International Publication No	: NA	**5)DEVAPRAKASH**
(61) Patent of Addition to Application Number	:NA	
Filing Date	:NA	
(62) Divisional to Application Number	:NA	
Filing Date	:NA	

(57) Abstract :
A NOVEL HERBAL DISINFECTING COMPOSITION AND DISPENSING DEVICE THEREOF A novel herbal disinfecting composition and dispensing device thereof relates to composition comprising the extracts of neem, papaya, turmeric with isopropyl alcohol showing improved efficiency. The invention also discloses the dispensing device where the liquid inlet to the dispenser is controlled by solenoid (100) which is activated by the controller (101) when the level switch (102) reads low level in the dispenser tank (103). There exists another solenoid (106) which is activated when the human hand or any object to be disinfected is placed near the dispenser nozzle (105) is sensed by Object sensor (104) and 5 triggers the micro controller (101) to activate the solenoid (106) to dispense sanitizer solution from the dispenser tank (103) to dispenser nozzle (105) controlled by solenoid. Once the hand is moved away from the nozzle the object sensor (104) sends signal to micro controller to cut off the solenoid (106) and stop dispense of sanitizer through Nozzle.

No. of Pages : 28 No. of Claims : 8

(12) PATENT APPLICATION PUBLICATION
(21) Application No.202141015875 A
(19) INDIA
(22) Date of filing of Application :04/04/2021
(43) Publication Date : 16/07/2021

(54) Title of the invention : Smart Stethoscope Connected with Smart Phone

(51) International classification	:A61B0005000000, A61B0007020000, A61B0007040000, A61B0005024000, A61B0007000000
(31) Priority Document No	:NA
(32) Priority Date	:NA
(33) Name of priority country	:NA
(86) International Application No	:PCT//
Filing Date	:01/01/1900
(87) International Publication No	: NA
(61) Patent of Addition to Application Number	:NA
Filing Date	:NA
(62) Divisional to Application Number	:NA
Filing Date	:NA

(71)**Name of Applicant :**
1)Bharath Institute of Higher Education and Research
Address of Applicant :No.173, Agharam road, Selaiyur, Chennai - 600073. Tamil Nadu India
(72)**Name of Inventor :**
1)Dr. Jaikumar

(57) Abstract :
ABSTRACT Smart Stethoscope Connected with Smart Phone This invention is related to the field of electronic device used for medical diagnosis. This invention is a smart stethoscope, which helps doctors detect and diagnose heart problems. It is working like a stethoscope, and helps physicians listen to and measure heart rates or lung sounds by running an app and the result at the phone. The emergence of the smart stethoscope has paved the way for a new field of computer-aided auscultation. Using this smart stethoscope, the disease condition is diagnosis and the image of the infected area in shown in the smartphone. The sensors in the smart stethoscope sense the disease condition and it transmits the data to the controller which amplifies the signal and it transmits the signal to the smart phone.

No. of Pages : 17 No. of Claims : 1

(12) PATENT APPLICATION PUBLICATION
(21) Application No.202141016887 A
(19) INDIA
(22) Date of filing of Application :10/04/2021
(43) Publication Date : 16/07/2021

(54) Title of the invention : System and Method of Intelligent Coffee Vending Machine

(51) International classification	:G06K0009000000, G06N0003040000, H04L0012280000, G06N0020000000, G07F0009020000
(31) Priority Document No	:NA
(32) Priority Date	:NA
(33) Name of priority country	:NA
(86) International Application No	:PCT// /
Filing Date	:01/01/1900
(87) International Publication No	: NA
(61) Patent of Addition to Application Number	:NA
Filing Date	:NA
(62) Divisional to Application Number	:NA
Filing Date	:NA

(71)**Name of Applicant :**
1)Gurram Sunitha
Address of Applicant :Sree Vidyanikethan Engineering College, Tirupati Andhra Pradesh India
2)K.Reddy Madhavi
3)J.Avanija
(72)**Name of Inventor :**
1)Dr.V.Saravana Kumar
2)Kotamraju Sri Indrani
3)Dr.S.Viswanadha Raju
4)Dharma Teja Lanka
5)Dr.Hima Bindu Valiveti
6)Dr,D.Rajya Lakshmi
7)Dr. Gudavalli Madhavi

(57) Abstract :
The mechanism to track the consumption of coffee and preferences of coffee based on sugar level are not available in normal coffee vending machine. Artificial intelligence offers automated services to end users by examining their preferences and provides services accordingly. Moreover the devices can be implemented with artificial intelligence to perform end user services automatically based on their preferences. The present invention provides system and method of intelligent coffee vending machine serving coffee automatically based on end user preferences. The Artificial Intelligence based facial recognition module specified in the invention receives the end users images captured by image capturing unit and uses convolution neural network technology to identify end users. The present invention also supports end users by customizing their coffee preferences such as sugar levels or sugarless and get coffee automatically.

No. of Pages : 16 No. of Claims : 9

(12) PATENT APPLICATION PUBLICATION
(19) INDIA
(22) Date of filing of Application :10/04/2021
(21) Application No.202141016905 A
(43) Publication Date : 16/07/2021

(54) Title of the invention : Anti-Tumor Bioactive In Effective Immunostimulatory

(51) International classification	:A61K0039000000, A61K0039390000, A61P0037040000, A61K0036070000, A61N0001400000	(71)**Name of Applicant :** **1)Bharath Institute of Higher Education and Research** Address of Applicant :No.173, Agharam road, Selaiyur, Chennai - 600073. Tamil Nadu India (72)**Name of Inventor :** **1)Dr. Swathi**
(31) Priority Document No	:NA	
(32) Priority Date	:NA	
(33) Name of priority country	:NA	
(86) International Application No	:PCT//	
Filing Date	:01/01/1900	
(87) International Publication No	: NA	
(61) Patent of Addition to Application Number	:NA	
Filing Date	:NA	
(62) Divisional to Application Number	:NA	
Filing Date	:NA	

(57) Abstract :
ABSTRACT Anti-Tumor Bioactive In Effective Immunostimulatory Immunostimulators are substances used to fight against an infection or disease in the human body. The anti-tumor bioactive system stops the growth of tumor cells and the immunostimulator stimulates the immune system to fight against the cancer cells and to develop the immune power. Immunostimulatory agents, including adjuvants, cytokines, and monoclonal antibodies, hold great potential for the treatment of cancer. These substances stimulate the immune system and destroy the tumor cells. The immunostimulator has the adoptive cell surface to destroy the antigens. This immunostimulatory chip is fixed on the patient™s body to detect the tumor cells and it destroys the cells and stops the growth of tumor cells. The bioactive materials stimulate the immune system to produce new healthy cells and to increase the immunity.

No. of Pages : 16 No. of Claims : 1

(12) PATENT APPLICATION PUBLICATION
(21) Application No.202141017890 A
(19) INDIA
(22) Date of filing of Application :17/04/2021
(43) Publication Date : 16/07/2021

(54) Title of the invention : WASTE HEAT RECOVERY BASED A NOVEL AIR CONDITIONER FOR AUTOMOBILES

(51) International classification	:F25D0011000000, F24F0005000000, F02G0005000000, H01L0035000000, E21F0003000000
(31) Priority Document No	:NA
(32) Priority Date	:NA
(33) Name of priority country	:NA
(86) International Application No	:PCT//
Filing Date	:01/01/1900
(87) International Publication No	: NA
(61) Patent of Addition to Application Number	:NA
Filing Date	:NA
(62) Divisional to Application Number	:NA
Filing Date	:NA

(71)**Name of Applicant :**
1)Dr.K.Syed Jafar
Address of Applicant :Assistant Professor, Department of Mechanical Engineering, Government College of Engineering, Dharmapuri, Chettikarai, Tamilnadu majallelku@gmail.com Phone No.9597679840 Tamil Nadu India
2)Dr.S.B.RISWAN ALI
3)R. VENKATESAPERUMAL
4)SATHISH KUMAR.R
5)Dr. P. K. Giridharan
(72)**Name of Inventor :**
1)Dr.K.Syed Jafar
2)Dr.S.B.RISWAN ALI
3)R. VENKATESAPERUMAL
4)SATHISH KUMAR.R
5)Dr. P. K. Giridharan

(57) Abstract :
The refrigeration units presently utilized in road transport vehicles are of Vapour Compression Refrigeration System (VCRS) which exploits power from the engine, leading to loss of power. This loss can be diminished by utilizing Vapour Absorption Refrigeration System(VARS) based air conditioners. In vapour absorption refrigeration system, a physiochemical process replaces the mechanical process of vapour compression refrigeration system by using energy in the form of heat, rather than mechanical work. The heat mandatory for running the VARS can be gained from that which is wasted into the atmosphere from an IC engine. The similar effect of utilizing this wasted heat power from the exhaust gas can much efficiently be attained by the use of thermoelectric / Peltier coolers. In this invention, thermoelectric / Peltier coolers are effectively utilized to achieve refrigeration effect in the driver cabin with the help of soft copper tube is coiled around the exhaust pipe and is well insulated to avoid the leakage of heat. The average useful temp available in the exhaust pipe 200 0C. The tube is full with 10litres deionised water with a boiling point of 90 oC. When the vehicle starts running, the above exhaust heat is utilised to change the deionised water into steam. The pressurised steam with enormous velocity is sent into the impulse turbine and the steam velocity is used rotate the shaft of co-generator to about 250 rpm. Co-generator produces 24v, 4amp DC power. The steam after passing through the turbine gets condensed in the steam cylinder and flows back into the copper tube with gravity. Steam cylinder is fitted with a PRV which operates at 2psi for system pressure protection. The 24v ,4amp DC power is provided to the 6 peltier coolers connected in series and parallel and are clamped to frame which placed inside the cabin to produce the cooling effect based on the thermoelectric effect.

No. of Pages : 9 No. of Claims : 3

(12) PATENT APPLICATION PUBLICATION
(21) Application No.202141020288 A
(19) INDIA
(22) Date of filing of Application :04/05/2021
(43) Publication Date : 16/07/2021

(54) Title of the invention : METHOD FOR PREPARATION OF SOLUTION FOR AQUACULTURE POND

(51) International classification	:C05G0005230000, A61K0039390000, D01F0002000000, A01K0061600000, C07K0016080000	(71)**Name of Applicant :** **1) REKHA. T** Address of Applicant :CHOORAKKATTIL HOUSE, PO FAROOK COLLEGE, KOZHIKODE, KERALA, INDIA - 673632. Kerala India
(31) Priority Document No	:NA	(72)**Name of Inventor :**
(32) Priority Date	:NA	**1) REKHA. T**
(33) Name of priority country	:NA	
(86) International Application No	:NA	
Filing Date	:NA	
(87) International Publication No	: NA	
(61) Patent of Addition to Application Number	:NA	
Filing Date	:NA	
(62) Divisional to Application Number	:NA	
Filing Date	:NA	

(57) Abstract :
The present invention is a method for preparation of aquaculture solution wherein primary solution, secondary solution and tertiary solution are prepared and is fermented to obtain the agricultural solution. The method also uses pH/kH booster to escalate pH/kH values in aquaculture and agriculture. The said solution is used as a floe booster in bio floe to maintain water parameters, it is used in aquaculture and also in agriculture as beneficiary microbes in the solution enhances the immune system, flowering capacity and growth rate of plants and acts a biogas booster.

No. of Pages : 14 No. of Claims : 1

(12) PATENT APPLICATION PUBLICATION
(21) Application No.202141020745 A
(19) INDIA
(22) Date of filing of Application :06/05/2021
(43) Publication Date : 16/07/2021

(54) Title of the invention : Smart home automation for electricity saving using Home Energy Automation

(51) International classification	:G06Q0050060000, H02J0003140000, H02J0003000000, H04N0005445000, G06Q0010060000
(31) Priority Document No	:NA
(32) Priority Date	:NA
(33) Name of priority country	:NA
(86) International Application No	:PCT//
Filing Date	:01/01/1900
(87) International Publication No	: NA
(61) Patent of Addition to Application Number	:NA
Filing Date	:NA
(62) Divisional to Application Number	:NA
Filing Date	:NA

(71)**Name of Applicant :**
1)SYED IMRAN PATEL
Address of Applicant :Sr. LECTURER CSE IT ACADEMY Bahrain Training Institute Higher Education Council Ministry of Education Bahrain" Bahrain
2)Sajja Krishna Kishore
3)V. Raja Kumar
4)Dr. Upinder Kaur
5)Mr. Sankararao Majji
6)SHIVRAJ NANDKISHOR RAUT
7)Walunj Madhukar Baban
8)Dr.G.Satish, Assistant Professor,
9)Dr. NASIM HASAN
10)SRIKANTH DIVVALA
11)Mr. Santoshachandra Rao Karanam
12)Kaviyaraj R
(72)**Name of Inventor :**
1)SYED IMRAN PATEL
2)Sajja Krishna Kishore
3)V. Raja Kumar
4)Dr. Upinder Kaur
5)Mr. Sankararao Majji
6)SHIVRAJ NANDKISHOR RAUT
7)Walunj Madhukar Baban
8)Dr.G.Satish, Assistant Professor,
9)Dr. NASIM HASAN
10)SRIKANTH DIVVALA
11)Mr. Santoshachandra Rao Karanam
12)Kaviyaraj R

(57) Abstract :
Abstract: Currently, electricity demand has increased due to the introduction of new technology. Frequent peak demand appears to be caused by inefficient use of electricity. Furthermore, the electric vehicles will be widely used in developed and developing countries. Charging the electric vehicle would be a strain on the utility's budget. The utility company is unable to meet the electric demand of their modern customers. High demands for electricity cause the utility to experience regular outages. The demand for electricity is not met because the required DSM and DR programs are not available. The DR programs are ineffective. Smart grid technology allows for adequate DSM and DR software implementation, and the modern grid redefines the traditional grid by two-way connections between the utilities and end users. Control can be achieved with an effective DR software that uses the Smart Grid. Using the DR software will help both the user and the utility. There are three goals to reach goal, reducing the peak electricity demand, cutting consumption, and lowering standby power use these different home energy automation (HEA) systems are proposed to cut peak demand and energy costs for residential customers.

No. of Pages : 6 No. of Claims : 5

(12) PATENT APPLICATION PUBLICATION
(21) Application No.202141020889 A
(19) INDIA
(22) Date of filing of Application :07/05/2021
(43) Publication Date : 16/07/2021

(54) Title of the invention : CHARACTERIZATION AND EXPLORATION OF KEVLAR AND KENAF FIBER REINFORCED HYBRID COMPOSITE USING NATURAL COLOPHONY RESIN

(51) International classification	:C08J0005040000, C08J0005060000, B32B0015200000, C01B0032168000, B29C0070540000
(31) Priority Document No	:NA
(32) Priority Date	:NA
(33) Name of priority country	:NA
(86) International Application No	:PCT//
Filing Date	:01/01/1900
(87) International Publication No	: NA
(61) Patent of Addition to Application Number	:NA
Filing Date	:NA
(62) Divisional to Application Number	:NA
Filing Date	:NA

(71)**Name of Applicant :**
1)Dr. M. RAMESH
Address of Applicant :PROFESSOR DEPARTMENT OF MECHANICAL ENGINEERING KIT-KALAIGNARKARUNANIDHI INSTITUTE OF TECHNOLOGY PALLAPALAYAM, KANNAMPALAYAM, COIMBATORE TAMIL NADU 641402 Tamil Nadu India
2)Mr. M. TAMIL SELVAN
3)Ms. T.VINITHA
4)Ms. K. NIRANJANA
5)Dr. C. DEEPA
(72)**Name of Inventor :**
1)Dr. M. RAMESH
2)Mr. M. TAMIL SELVAN
3)Ms. T.VINITHA
4)Ms. K. NIRANJANA
5)Dr. C. DEEPA

(57) Abstract :
ABSTRACT CHARACTERIZATION AND EXPLORATION OF KEVLAR AND KENAF FIBER REINFORCED HYBRID COMPOSITE USING NATURAL COLOPHONY RESIN Composites made with characteristic filaments are discovering applications in a wide assortment of designing fields because of their minimal effort and eco-accommodating nature. This innovation manages the creation and assessment of half and half regular fiber composite utilizing kenaf and Kevlar filaments. The current development gives a half breed Natural Fiber Reinforced Composites utilized as assortment of items in auto, furnishings, upholstery, house hold products and PC merchandise. Present development uses making supported composite material produced using normal filaments and polymers. Especially the creation gives an interaction to making built up composite material produced using common strands and polymers. The current creation is a push to use the benefits offered by inexhaustible assets for the improvement of composite materials dependent on polymer and particles of regular strands. The mix of at least two supporting materials having various properties is named as a composite material. The mix of at least two filaments is characterized as cross breed composites, such cycle is known is hybridization. Hybridization expands the mechanical properties. In the venture we have adjusted half breed composite which is Kevlar(synthetic fiber) and kenaf (common fiber) and created through hand lay-up strategy where we have utilized epoxy gum alongside normal resin(colophony resin).The present exploratory investigation targets learning the mechanical conduct of the mixture composite..

No. of Pages : 25 No. of Claims : 7

(12) PATENT APPLICATION PUBLICATION
(19) INDIA
(22) Date of filing of Application :23/05/2021
(21) Application No.202141022959 A
(43) Publication Date : 16/07/2021

(54) Title of the invention : SMART FACIAL DOOR LOCK SYSTEM

(51) International classification	:G06K0009000000, G08B0013190000, G06K0009620000, G08B0013196000, G08B0015000000
(31) Priority Document No	:NA
(32) Priority Date	:NA
(33) Name of priority country	:NA
(86) International Application No	:PCT//
Filing Date	:01/01/1900
(87) International Publication No	: NA
(61) Patent of Addition to Application Number	:NA
Filing Date	:NA
(62) Divisional to Application Number	:NA
Filing Date	:NA

(71)**Name of Applicant :**
1)Dr. Kalpana Murugan
Address of Applicant :Professor and Head Department of Electronics and Communication Engineering Kalasalingam Academy of Research And Education, Anand Nagar, Krishnankoil-626126, Tamil Nadu, India Tamil Nadu India
2)Ms. J. Krishnapriya
3)Ms. P. Gayatri
4)Mr.C.Sathya Pradeep
(72)**Name of Inventor :**
1)Dr. Kalpana Murugan
2)Ms. J. Krishnapriya
3)Ms. P. Gayatri
4)Mr.C.Sathya Pradeep

(57) Abstract :
People wish to protect the homes from any theft and irregularities. Human guards can be appointed but it won™t be safe all the time. Using advanced technology, we can secure our homes through smartphones. Smartphones are available with everyone nowadays. It™s best known for its size-compatibility to carry in hands. The device is proposed to secure the home through smartphones. Significantly, wireless technology are effective ones. The developed prototype uses Linear Discriminant Analysis (LDA) a facial recognition algorithm to identify the faces and compare with trained data. Raspberry Pi act as a configuration module with Pi camera to capture image, Passive Infra-Red (PIR) Sensor to detect the faces. The captured images are sent to authenticated person through mail. Owner can control the access of the person by his mail. The device is operated with a DC motor which will be operated like a shutter that rotates 90 degrees in order to open and close automatically. The device is operated with the Wi-Fi so that the message transmission and reception occur time to time. This methodology can be applied to many sectors such as at work places, government authenticated rooms, banks, etc.

No. of Pages : 6 No. of Claims : 4

(12) PATENT APPLICATION PUBLICATION
(21) Application No.202141024075 A
(19) INDIA
(22) Date of filing of Application :30/05/2021
(43) Publication Date : 16/07/2021

(54) Title of the invention : PLASMA WATER TREATMENT SYSTEM

(51) International classification	:C02F0001280000, C02F0001440000, C02F0009000000, C02F0101300000, C02F0001460000
(31) Priority Document No	:NA
(32) Priority Date	:NA
(33) Name of priority country	:NA
(86) International Application No	:PCT//
Filing Date	:01/01/1900
(87) International Publication No	: NA
(61) Patent of Addition to Application Number	:NA
Filing Date	:NA
(62) Divisional to Application Number	:NA
Filing Date	:NA

(71)**Name of Applicant :**
1)Er. Elizabeth Rajan
Address of Applicant :Assistant Professor Department of Electrical and Electronics SAINTGITS College of Engineering, Kottukulam Hills Pathamuttom P. O Kottayam 686532 KERALA Kerala India
2)Akhil John
3)Milan Sony
4)Rhea Ann Thomas
5)Rohan Reghu
(72)**Name of Inventor :**
1)Er. Elizabeth Rajan
2)Akhil John
3)Milan Sony
4)Rhea Ann Thomas
5)Rohan Reghu

(57) Abstract :
Freshwater scarcity derived from seasonal weather variations, climate change, and over • development has led to serious consideration for water reuse. Water reuse involves the direct processing of wastewater for either indirect or directly potable water reuse. In either case, advanced water treatment technologies will be required to process the water to the point that it can be reused in a meaningful way. Additionally, there is growing concern regarding micro-pollutants, such as pharmaceuticals and personal care products, which have been detected in finished drinking water not removed by conventional means. One new and emerging technology that could potentially address the removal of micro-pollutants in both finished drinking water as well as wastewater slated for reuse is plasma • based water purification. Plasma in contact with liquid water generates a host of reactive species that attack and ultimately mineralize contaminants in solution. This interaction takes place in the boundary layer or interaction zone centered at the plasma - liquid water interface. In order to mitigate the contamination of water sources due to the spill of sewage without any kind of treatment, mainly generated by the industrial sector; a prototype of water purification by plasma technology has been designed. The prototype will convert contaminated liquid water into bacteria and contaminant free water which will eliminate the pathogens from the water, due to their exposure to ionized plasma inside the chamber which aid in the destruction of pollutants. Plasma is created when high voltage is supplied from EHT. A time base is generated which initiates the working of the control system. The Air inside the chamber gets ionized. When water fills inside the chamber and when pressure increases outlet valve opens with treated water coming out. The water will be clean from all Bacteria and all kind of contaminants. It is intended that this new system will be more efficient and cheaper than the current water treatments.

No. of Pages : 13 No. of Claims : 4

(12) PATENT APPLICATION PUBLICATION
(19) INDIA
(22) Date of filing of Application :30/05/2021
(21) Application No.202141024081 A
(43) Publication Date : 16/07/2021

(54) Title of the invention : INTELLIGENT IRRIGATION MONITORING AND CONTROLLING SYSTEM FOR AGRICULTURE BASED ON SOLAR ENERGY USING INTERNET OF THINGS

(51) International classification	:A01G0025160000, H02J0007350000, G06Q0050100000, A01G0027000000, H02S0020300000
(31) Priority Document No	:NA
(32) Priority Date	:NA
(33) Name of priority country	:NA
(86) International Application No	:PCT//
Filing Date	:01/01/1900
(87) International Publication No	: NA
(61) Patent of Addition to Application Number	:NA
Filing Date	:NA
(62) Divisional to Application Number	:NA
Filing Date	:NA

(71)**Name of Applicant :**
1)Dr. Dayananda.P
Address of Applicant :Professor, Department of Information Science and Engineering, JSS Academy of Technical Education, Bengaluru, Karnataka, India Karnataka India
2)Rohith M N
3)Lokesh B S
4)Santhosh Babu K C
5)Mr. R. Sreejith
6)Dr. Felix M Philip
7)Mr. Scaria Alex
8)Mr. Manu G Thomas
9)Amulya M P
10)Dr. Niranjanamurthy M
11)Dr. Parag S Jawarkar
(72)**Name of Inventor :**
1)Dr. Dayananda.P
2)Rohith M N
3)Lokesh B S
4)Santhosh Babu K C
5)Mr. R. Sreejith
6)Dr. Felix M Philip
7)Mr. Scaria Alex
8)Mr. Manu G Thomas
9)Amulya M P
10)Dr. Niranjanamurthy M
11)Dr. Parag S Jawarkar

(57) Abstract :
The present invention relates to intelligent irrigation monitoring and controlling system for agriculture based on solar energy using internet of things. The objective of the present invention is to solve the problems in the prior art technologies of solar energy based automatic irrigation control.

No. of Pages : 30 No. of Claims : 4

(12) PATENT APPLICATION PUBLICATION
(21) Application No.202141024084 A
(19) INDIA
(22) Date of filing of Application :30/05/2021
(43) Publication Date : 16/07/2021

(54) Title of the invention : Svatantr-E : Ecological Work through Self-Powered Cost-Efficient Energy Proportional Connected Computing

(51) International classification	:G06Q0090000000, G06F0016280000, A45C0015000000, G10L0015020000, E04B0001000000
(31) Priority Document No	:NA
(32) Priority Date	:NA
(33) Name of priority country	:NA
(86) International Application No	:PCT//
Filing Date	:01/01/1900
(87) International Publication No	: NA
(61) Patent of Addition to Application Number	:NA
Filing Date	:NA
(62) Divisional to Application Number	:NA
Filing Date	:NA

(71)**Name of Applicant :**
1)T. Sujanavan
Address of Applicant :2-18-32/F/306, Prajay Ashray Appts, Zaheed Nagar, Uppal, Rangareddi - 500039 Telangana India
2)Dr. Yellasiri Ramadevi
3)Dr. Akhil Khare
4)Dr. Pallavi Khare
5)Devalraju Venkata Sitarama Sesidhar
(72)**Name of Inventor :**
1)T. Sujanavan
2)Dr. Yellasiri Ramadevi
3)Dr. Akhil Khare
4)Dr. Pallavi Khare
5)Devalraju Venkata Sitarama Sesidhar

(57) Abstract :
Restricted energy utilization and environment friendly electronic components is the irreplaceable prerequisite of present day computing devices being created. Hardware are additionally expanding the carbon emanations and e-waste management isn't sufficient bringing about unlawful dumping prompting poisonous toxic waste into air, water and land influencing living beings on earth. ˜Svatantr-E™ is an innovative methodology for organizing and performing Ecological Work(EW) which isn't just self-fueled but additionally empowers Energy Proportional Connected Computing(EPCC). The EW system deciphers choices that smooth out the structure to improve the general quality(QI) of EPCC to lessen the carbon footprint(CF). A huge focus made on standard widespread enlistment among framework on chip(SoC) gadgets for correspondence expanding battery life(BL). Broadened joining of different energy harvesting(EH) strategies overcomes external power dependency(EPD) to limit further SoC execution improvements. EW utilizing EPCC additionally makes a domain of related items for advancement of a system between various articles associated with fundamental sensors and actuators. EPCC downsizes prerequisites of devices with higher computational capacities by supplanting them with low and ultra-low power correspondence SoC building up an EW which can be applied in the area of working in gear arrangement, programming, training, sorting out, information store and retail location terminals. 'Svatantr-E' framework is focused to profit from low investment(LI), low running cost(LRC), low maintenance(LM), low power consumption(LPC) and higher life span for foundations, associations or even people who perform low processing occupations over overwhelmed high power consumption PCs. 'Svatantr-E' is the blend of EW inspiration and standards of EPCC is a novel natural arrangement dependent on self energy collecting methods dispensing with reliance on outer force hotspots for building up a free registering condition and eco-framework among comparable gadgets for a healthy environmental future.

No. of Pages : 40 No. of Claims : 7

(12) PATENT APPLICATION PUBLICATION
(21) Application No.202141024302 A
(19) INDIA
(22) Date of filing of Application :31/05/2021
(43) Publication Date : 16/07/2021

(54) Title of the invention : DOUBLE DIGIT MANUAL TOOTH BRUSH

(51) International classification	:A46B0005040000, G06Q0050200000, A46B0009020000, A46B0015000000, A46B0005000000
(31) Priority Document No	:NA
(32) Priority Date	:NA
(33) Name of priority country	:NA
(86) International Application No	:PCT//
Filing Date	:01/01/1900
(87) International Publication No	: NA
(61) Patent of Addition to Application Number	:NA
Filing Date	:NA
(62) Divisional to Application Number	:NA
Filing Date	:NA

(71)**Name of Applicant :**
1)MEENAKSHI ACADEMY OF HIGHER EDUCATION AND RESEARCH
Address of Applicant :NO.12, VEMBULIAMMAN KOIL STREET WEST K.K. NAGAR CHENNAI TAMIL NADU INDIA 600 078 Tamil Nadu India
(72)**Name of Inventor :**
1)DR. N AMBALAVANAN
2)DR JAIDEEP MAHENDRA

(57) Abstract :
APPLICANT: MEENAKSHI ACADEMY OF HIGHER EDUCATION AND RESEARCH TITLE: DOUBLE DIGIT MANUAL TOOTH BRUSH ABSTRACT The present invention discloses a Double Digit Manual Tooth Brush comprises of two snugly fitting fingerstall type hallow outfit cones having closed end and opened end. The two snugly fitting fingerstall type hallow outfit cones are attached to each other by means of a cord to make the two snugly fitting fingerstall type hallow outfit cones as one single unit. The closed end is incorporated with short bristles covering 360 • ° from top to predetermined length down below and the open end is adapted to mount on index finger and thumb finger for convenient holding and brushing.

No. of Pages : 11 No. of Claims : 4

(12) PATENT APPLICATION PUBLICATION
(21) Application No.202141024303 A
(19) INDIA
(22) Date of filing of Application :31/05/2021
(43) Publication Date : 16/07/2021

(54) Title of the invention : DIAGNOSTIC METHOD FOR PERIODONTITIS PATIENTS ASSOCIATED WITH STENOTIC VALVE DISEASE FOR PREVENTION AND EARLY DETECTION OF COMORBIDITIES

(51) International classification	:A61K0039120000, C12Q0001700000, G16H0040630000, C07K0014005000, G16H0050300000
(31) Priority Document No	:NA
(32) Priority Date	:NA
(33) Name of priority country	:NA
(86) International Application No	:PCT//
Filing Date	:01/01/1900
(87) International Publication No	: NA
(61) Patent of Addition to Application Number	:NA
Filing Date	:NA
(62) Divisional to Application Number	:NA
Filing Date	:NA

(71)**Name of Applicant :**
1)MEENAKSHI ACADEMY OF HIGHER EDUCATION AND RESEARCH
Address of Applicant :NO.12, VEMBULIAMMAN KOIL STREET WEST K.K. NAGAR CHENNAI TAMIL NADU INDIA 600 078 Tamil Nadu India
(72)**Name of Inventor :**
1)DR JAIDEEP MAHENDRA
2)PAAVAI ILANGO
3)DR LITTLE MAHENDRA

(57) Abstract :
APPLICANT: MEENAKSHI ACADEMY OF HIGHER EDUCATION AND RESEARCH TITLE: DIAGNOSTIC METHOD FOR PERIODONTITIS PATIENTS ASSOCIATED WITH STENOTIC VALVE DISEASE FOR PREVENTION AND EARLY DETECTION OF COMORBIDITIES ABSTRACT The present invention discloses a diagnostic method for periodontitis patients associated with stenotic valve disease for prevention and early detection of comorbidities for CVD patients.The diagnostic method of the present invention comprises of obtaining Stenotic valve samples and detecting the presence of periodontal viruses comprising of Cytomegalo virus (CMV), and Epstein barr virus(EBV) in which presence of the Cytomegalo virus (CMV), and Epstein barr virus(EBV) in an higher count of 75%(CMV), and 62.5%(EBV) in the stenotic valve samples indicates higher chance of co morbidities thereby advising the CVD patients to undergo treatment accordingly.

No. of Pages : 13 No. of Claims : 4

(12) PATENT APPLICATION PUBLICATION
(21) Application No.202141024304 A
(19) INDIA
(22) Date of filing of Application :31/05/2021
(43) Publication Date : 16/07/2021

(54) Title of the invention : DIAGNOSTIC METHOD FOR PRE-ECLAMPSIA WOMEN TO PREVENT ADVERSE PREGNANCY OUTCOMES AND EARLY DETECTION OF CO-MORBIDITIES

(51) International classification	:C07K0014005000, G01N0033680000, G06Q0050200000, A61C0017200000, A61K0035763000
(31) Priority Document No	:NA
(32) Priority Date	:NA
(33) Name of priority country	:NA
(86) International Application No	:PCT//
Filing Date	:01/01/1900
(87) International Publication No	: NA
(61) Patent of Addition to Application Number	:NA
Filing Date	:NA
(62) Divisional to Application Number	:NA
Filing Date	:NA

(71)**Name of Applicant :**
1)MEENAKSHI ACADEMY OF HIGHER EDUCATION AND RESEARCH
Address of Applicant :NO.12, VEMBULIAMMAN KOIL STREET WEST K.K. NAGAR CHENNAI TAMIL NADU INDIA 600 078 Tamil Nadu India
(72)**Name of Inventor :**
1)DR JAIDEEP MAHENDRA
2)DR SWETHA TANNEERU
3)DR LITTLE MAHENDRA

(57) Abstract :
APPLICANT: MEENAKSHI ACADEMY OF HIGHER EDUCATION AND RESEARCH TITLE: DIAGNOSTIC METHOD FOR PRE-ECLAMPSIA WOMEN TO PREVENT ADVERSE PREGNANCY OUTCOMES AND EARLY DETECTION OF CO-MORBIDITIES ABSTRACT The present invention discloses a diagnostic method for pre-eclampsia women to prevent adverse pregnancy outcomes and to early detection of co morbidities.The diagnostic method of the present invention comprises of obtaining subgingival plaque samples and detecting the presence of periodontal viruses comprising of Herpes Simplex Virus, Epstein Barr Virus, Human CytoMegalin which if the presence of the Herpes Simplex Virus, Epstein Barr Virus, Human CytoMegalo in an higher count of 4.9x107 in subgingival plaque samples of Herpes Simplex Virus,8.7x107in subgingival plaque samples of Epstein Barr Virus, 6.85x106 in subgingival plaque samples of the Human CytoMegalo Virus indicates higher chance of adverse pregnancy outcome and increased risk of co morbidities thereby advising the pre-eclampsia women to undergo treatment accordingly.

No. of Pages : 12 No. of Claims : 6

(12) PATENT APPLICATION PUBLICATION
(21) Application No.202141024305 A
(19) INDIA
(22) Date of filing of Application :31/05/2021
(43) Publication Date : 16/07/2021

(54) Title of the invention : PROCESS OF PREPARATION OF BIOLOGICAL NOVEL MATERIAL FOR THE MANAGEMENT OF OSTEOCLASTOGENESIS IN CHRONIC PERIODONTITIS

(51) International classification	:C09C0001420000, B22F0003105000, C01B0032162000, B29C0044340000, G06Q0050200000
(31) Priority Document No	:NA
(32) Priority Date	:NA
(33) Name of priority country	:NA
(86) International Application No	:PCT//
Filing Date	:01/01/1900
(87) International Publication No	: NA
(61) Patent of Addition to Application Number	:NA
Filing Date	:NA
(62) Divisional to Application Number	:NA
Filing Date	:NA

(71)**Name of Applicant :**
1)MEENAKSHI ACADEMY OF HIGHER EDUCATION AND RESEARCH
Address of Applicant :NO.12, VEMBULIAMMAN KOIL STREET WEST K.K. NAGAR CHENNAI TAMIL NADU INDIA 600078 Tamil Nadu India
(72)**Name of Inventor :**
1)DR.K.ANILKUMAR
2)DR.JAIDEEP MAHENDRA
3)DR.K.REVATHI

(57) Abstract :
APPLICANT: MEENAKSHI ACADEMY OF HIGHER EDUCATION AND RESEARCH TITLE: PROCESS OF PREPARATION OF BIOLOGICAL NOVEL MATERIAL FOR THE MANAGEMENT OF OSTEOCLASTOGENESIS IN CHRONIC PERIODONTITIS ABSTRACT The present invention discloses a process of preparation of biological novel material for the management of Osteoclastogenesis in Chronic Periodontitis. The process of the present invention comprises of following steps; a. pressing predetermined amount of PRF gel between two pieces of absorbent membrane followed by mincing at predetermined dimensions to form small fibrin PRF threads and; b. adding the small fibrin PRF threads to predetermined amount of BCP followed by mixing to from the biological novel material. The present invention also disclose a biological novel material for the management of Osteoclastogenesis in Chronic Periodontitis prepared by the process described above.

No. of Pages : 16 No. of Claims : 6

(12) PATENT APPLICATION PUBLICATION
(19) INDIA
(22) Date of filing of Application :31/05/2021
(21) Application No.202141024306 A
(43) Publication Date : 16/07/2021

(54) Title of the invention : DIAGNOSTIC METHOD OF PREVENTION AND EARLY DETECTION OF COMORBIDITIES IN CP AND/OR CAD PATIENTS

(51) International classification	:C12Q0001688300, G01N0033680000, G16H0050200000, G16H0040630000, G01N0033490000
(31) Priority Document No	:NA
(32) Priority Date	:NA
(33) Name of priority country	:NA
(86) International Application No	:PCT//
Filing Date	:01/01/1900
(87) International Publication No	: NA
(61) Patent of Addition to Application Number	:NA
Filing Date	:NA
(62) Divisional to Application Number	:NA
Filing Date	:NA

(71)**Name of Applicant :**
1)MEENAKSHI ACADEMY OF HIGHER EDUCATION AND RESEARCH
Address of Applicant :NO.12, VEMBULIAMMAN KOIL STREET WEST K.K. NAGAR CHENNAI TAMIL NADU INDIA 600 078 Tamil Nadu India
(72)**Name of Inventor :**
1)DR JAIDEEP MAHENDRA
2)DR. N AMBALAVANAN

(57) Abstract :
APPLICANT: MEENAKSHI ACADEMY OF HIGHER EDUCATION AND RESEARCH TITLE: DIAGNOSTIC METHOD OF PREVENTION AND EARLY DETECTION OF COMORBIDITIES IN CP AND/OR CAD PATIENTS ABSTRACT The present invention discloses a diagnostic method of prevention and early detection of comorbidities in CAD patients. The diagnostic method comprises of Obtaining samples from a generalized chronic periodontitis subjects with coronary artery disease; and determining allele change and frequency with odds ratio of the NLRP3 (rs4612666), CARD8 (rs2043211) and IL-1Î² (+3954) gene polymorphisms in the samples. If the Allele change (Frequency)an(%) of 20(57.1%) (CP-GROUP I), 28(80%) (CP + CAD-Group II) in subgingival plaque and 16(45.7%) (CP- GROUP I), 29(82.9%) (CP + CAD- Group II)in blood samples of NLRP3; 19(54.3%) (CP- GROUP I), 24(68.6%) (CP + CAD- Group II) in subgingival plaque and 23(65.7%) (CP- GROUP I), 28(80%) (CP + CAD- Group II) in blood samples of CARD8; 27(93.1%) (CP- GROUP I), 32(100%) (CP + CAD- Group II) in subgingival plaque and 25(100%) (CP- GROUP I), 29(82.85%) (CP + CAD- Group II) in blood samples of IL-1Î² and Allele expression of AG, GC, CT in NLRP3; GA, AC, TC in CARD8; CT, AT, AG in IL-1Î² indicates higher risk of appearance of comorbidities in CAD patients thereby advising the CAD patients to undergo treatment accordingly.

No. of Pages : 22 No. of Claims : 8

(12) PATENT APPLICATION PUBLICATION
(19) INDIA
(22) Date of filing of Application :06/06/2021

(21) Application No.202141025104 A
(43) Publication Date : 16/07/2021

(54) Title of the invention : SYSTEM FOR CONTROLLING VARIOUS CROP HARVEST ACTIVITIES USING BIG DATA ANALYTICS BASED MACHINE LEARNING AND IOT

(51) International classification	:G06N0020000000, G06Q0010040000, G06Q0050020000, A01B0079000000, G06N0003080000
(31) Priority Document No	:NA
(32) Priority Date	:NA
(33) Name of priority country	:NA
(86) International Application No	:PCT//
Filing Date	:01/01/1900
(87) International Publication No	: NA
(61) Patent of Addition to Application Number	:NA
Filing Date	:NA
(62) Divisional to Application Number	:NA
Filing Date	:NA

(71)**Name of Applicant :**
1)Dr. Dayananda.P
Address of Applicant :Professor, Department of Information Science and Engineering, JSS Academy of Technical Education, Bengaluru, Karnataka, India Karnataka India
2)Prof. Shubham Joshi
3)Dr. Ujjwal Kumar Nayak
4)Ambrish Kumar Sharma
5)Dr. Pankaj Singh
6)Prof.(Dr.) Sachin Yadav
7)Dr. Niranjanamurthy M
8)Amulya M P
9)Dr. Atul Kumar
10)Mr. Amit Tiwari
11)Mr. Vikrant Sharma
12)Mukesh Kumar
13)Ajeet Kumar
(72)**Name of Inventor :**
1)Dr. Dayananda.P
2)Prof. Shubham Joshi
3)Dr. Ujjwal Kumar Nayak
4)Ambrish Kumar Sharma
5)Dr. Pankaj Singh
6)Prof.(Dr.) Sachin Yadav
7)Dr. Niranjanamurthy M
8)Amulya M P
9)Dr. Atul Kumar
10)Mr. Amit Tiwari
11)Mr. Vikrant Sharma
12)Mukesh Kumar
13)Ajeet Kumar

(57) Abstract :
The present invention relates to system for controlling various crop harvest activities using big data analytics based machine learning and IOT. The objective of the present invention is to solve the problems in the prior art technologies related to precision agriculture.

No. of Pages : 29 No. of Claims : 4

(12) PATENT APPLICATION PUBLICATION
(21) Application No.202141025942 A
(19) INDIA
(22) Date of filing of Application :10/06/2021
(43) Publication Date : 16/07/2021

(54) Title of the invention : Mask Detector using MobileNet Architecture and face recognition with a fining system on any Database.

(51) International classification	:G06K0009000000, A41D0013110000, A62B0023020000, G06Q0050200000, A62B0018020000	(71)**Name of Applicant :** **1)Mohammed Zubair Ansar** Address of Applicant :Student, School of ECE, REVA University Karnataka India **2)Vivian Williams** **3)Ajin Frank J** **4)Mr. Ravishankar H**
(31) Priority Document No	:NA	
(32) Priority Date	:NA	
(33) Name of priority country	:NA	(72)**Name of Inventor :**
(86) International Application No	:PCT//	**1)Mohammed Zubair Ansar**
Filing Date	:01/01/1900	**2)Vivian Williams**
(87) International Publication No	: NA	**3)Ajin Frank J**
(61) Patent of Addition to Application Number	:NA	**4)Mr. Ravishankar H**
Filing Date	:NA	
(62) Divisional to Application Number	:NA	
Filing Date	:NA	

(57) Abstract :
After the new Coronavirus disease (COVID-19) case spread rapidly in Wuhan-China in December 2019, World Health Organization (WHO) confirmed that this is a dangerous virus which can be spreading from humans to humans through droplets and airborne. As for the prevention, wearing a face mask is essentials while going outside or meeting to others. However, some irresponsible people refuse to wear face mask with so many excuses. Moreover, developing the face mask detector is very crucial in this case. So our Deep Learning Model predicts or detects if a person is wearing a mask or not and also if he is wearing it properly or not using MobileNet which is a class of CNN and if the person is not wearing a mask, his/her image is captured and face is recognized using the images stored in the database. The identity of the person is extracted from the database including his Mobile Number and a message will be sent warning or alerting him/her to wear the mask. So the above mentioned operation can only be performed in a college or any organization which maintains a database of the students or employees entering their campus or organization.

No. of Pages : 13 No. of Claims : 4

(12) PATENT APPLICATION PUBLICATION
(19) INDIA
(22) Date of filing of Application :11/06/2021

(21) Application No.202141026200 A
(43) Publication Date : 16/07/2021

(54) Title of the invention : Real Time Based IoT Enabled Smart Metering System

(51) International classification	:G06Q0050060000, H02J0013000000, G01D0004000000, G01D0021020000, G01R0021000000
(31) Priority Document No	:NA
(32) Priority Date	:NA
(33) Name of priority country	:NA
(86) International Application No	:PCT//
Filing Date	:01/01/1900
(87) International Publication No	: NA
(61) Patent of Addition to Application Number	:NA
Filing Date	:NA
(62) Divisional to Application Number	:NA
Filing Date	:NA

(71)**Name of Applicant :**
1)Dr.N.Yogambal Jayalakshmi
Address of Applicant :Assistant Professor, Department of Electrical and Electronics Engineering, Dr.Mahalingam College of Engineering and Technology, Pollachi“ 642003. Tamil Nadu India
2)Dr.T.Vinoth Kumar
3)Dr. K. Umamaheswari
4)Dr. P Monica
5)Dr. Neelakandeswari Natarajan
6)Mr.V.R.Mani
7)Mr.Jayabalan Sivasamy
8)Mr.R.Rajkumar
9)Mr.B.Raja Pagalavan
10)Mrs.D. Hema Sumitha
11)Mr.Koteeswaran Sivasamy
(72)**Name of Inventor :**
1)Dr.N.Yogambal Jayalakshmi
2)Dr.T.Vinoth Kumar
3)Dr. K. Umamaheswari
4)Dr. P Monica
5)Dr. Neelakandeswari Natarajan
6)Mr.V.R.Mani
7)Mr.Jayabalan Sivasamy
8)Mr.R.Rajkumar
9)Mr.B.Raja Pagalavan
10)Mrs.D. Hema Sumitha
11)Mr.Koteeswaran Sivasamy

(57) Abstract :
Abstract Real Time Based IoT Enabled Smart Metering System The demand for energy globally grows, so efforts to prevent waste of energy with appropriate design metering facilities have to be adopted. We using the Smart Grid technology may use a smart meter to check the power use. Equitable energy demand management is necessary to allocate the available resources. In recent years, energy demand management strategies have been used to quantify the energy needs yet to be satisfied accurately. An extensive system shows potential appreciation to perform energy-saving and extra energy services, which are expanded as a capable system for the end-user. The monitoring system in utilities determines the interface of devices with significant benefits. At the same time, the communication with the home often proposes specific structures to deploy a smart meter network for the buyer properly. For the remote monitoring of the metering infrastructure in real-time, an IOT-based platform is established. The viewing of data also occurs on the site, and data loss is checked for remote parameters monitoring.

No. of Pages : 20 No. of Claims : 4

(12) PATENT APPLICATION PUBLICATION
(21) Application No.202141026312 A
(19) INDIA
(22) Date of filing of Application :14/06/2021
(43) Publication Date : 16/07/2021

(54) Title of the invention : MULTIPURPOSE, COST EFFECTIVE AND ENVIRONMENT FRIENDLY SEA WAVEBREAKERS

(51) International classification	:E02B0003060000, E02B0003040000, F03B0013180000, E02B0003200000, A01K0061700000	
(31) Priority Document No	:NA	
(32) Priority Date	:NA	
(33) Name of priority country	:NA	
(86) International Application No	:NA	
Filing Date	:NA	
(87) International Publication No	: NA	
(61) Patent of Addition to Application Number	:NA	
Filing Date	:NA	
(62) Divisional to Application Number	:NA	
Filing Date	:NA	

(71)**Name of Applicant :**
1) YOOSUF. U. K
Address of Applicant :S/O: ABDUL RAHIMAN U K, U K PALACE, UPPALA, P. O UPPALA, KASARAGOD, KERALA - 671322. Kerala India
(72)**Name of Inventor :**
1) YOOSUF. U. K

(57) Abstract :
This -toventloft is aboul building Multipurpose. Cost Effective Wave Brakes along the S'ea Bed/Coastal Area: This effectively ptrcvGntsfcontfoSs sea &QSIOO which is a pamfthCBt itu& imsdived: proMemafleciiiig ilse sea coast, Abew 292% of Eanh&gJ&s juffecfe is land atca 1 .I c-dnsii'tiiig of continents iiiid Lsliuuls The remaining. 70.S3& is \V'atet :: The present invention is about creating C5 Effective and Environment Friendly Wave j Breakers which efeiively"previiiis/wrMiots sea eosiofl which is a peffnaoefH-flftd | unsolved problem iiffeclmg the -seis etjas&s iitrOsS the Gtohe where there is. heavy Showers m$ coniiroiaus rain. The structure proposed in (he wifl act as sea wave attenuation system «sirtg regular Concrete Structures insscaJ of granite peaces ftKfes, and .Rubbles. ; J

No. of Pages : 15 No. of Claims : 8

(12) PATENT APPLICATION PUBLICATION
(21) Application No.202141026639 A
(19) INDIA
(22) Date of filing of Application :15/06/2021
(43) Publication Date : 16/07/2021

(54) Title of the invention : A COMPOSITION FOR PREPARING FOAMED GLASS POWDERGEOPOLYMER BLOCKS AND METHOD OF PREPARATION THEREOF

(51) International classification	:C04B0028000000, C04B0111000000, C03C0011000000, C04B0111280000, C08J0009140000
(31) Priority Document No	:NA
(32) Priority Date	:NA
(33) Name of priority country	:NA
(86) International Application No	:NA
Filing Date	:NA
(87) International Publication No	: NA
(61) Patent of Addition to Application Number	:NA
Filing Date	:NA
(62) Divisional to Application Number	:NA
Filing Date	:NA

(71)**Name of Applicant :**
1)RAUT, Ashwin N.
Address of Applicant :Associate Professor, Department of Civil Engineering, KoneruLakshmaiah Education Foundation, Vaddeswaram, Guntur (Dist.), Andhra Pradesh, India -522502 Andhra Pradesh India
2)CHARPE, Anuja U.
(72)**Name of Inventor :**
1)RAUT, Ashwin N.
2)CHARPE, Anuja U.

(57) Abstract :
A COMPOSITION FOR PREPARING FOAMED GLASS POWDER GEOPOLYMER BLOCKS AND METHOD OF PREPARATION THEREOF The present invention relatesa composition for preparing foamed glass powder geo polymer blocks and method of preparation thereof. The proposed invention provides foamed glass powder geopolymer blocks manufactured with waste glass powder and fly ash as primary ingredients.In the present invention the raw materials utilize to produce the foamed glass powder geopolymer blocks are; glass powder (GP), fly ash (FA), sodium silicate (SS), sodium hydroxide (SH), crusher dust (CD) and alumina powder.The thermal performance of the developed blocks having low thermal conductivity values provide the thermally efficient solution for the buildings reducing the overall energy requirements of the building.

No. of Pages : 15 No. of Claims : 2

(12) PATENT APPLICATION PUBLICATION
(19) INDIA
(22) Date of filing of Application :17/06/2021

(21) Application No.202141026992 A
(43) Publication Date : 16/07/2021

(54) Title of the invention : SMART VISION BASED IRON BOX USING DEEP LEARNING ALGORITHMS

(51) International classification	:G06N0003040000, G06K0009620000, D06F0075300000, D06F0075260000, D06F0075000000
(31) Priority Document No	:NA
(32) Priority Date	:NA
(33) Name of priority country	:NA
(86) International Application No	:NA
Filing Date	:NA
(87) International Publication No	: NA
(61) Patent of Addition to Application Number	:NA
Filing Date	:NA
(62) Divisional to Application Number	:NA
Filing Date	:NA

(71)**Name of Applicant :**
1) Dr. J. YOGAPRIYA
Address of Applicant :PROFESSOR/CSE, KONGUNADU COLLEGE OF ENGINEERING AND TECHNOLOGY (KNCET), TIRCHY, TAMIL NADU, INDIA 621215. Tamil Nadu India
2)Dr. M. DHARMALINGAM
3)Dr. R. SHANKAR
4)Dr. C. SARAVANABHAVAN
5)Mr. M. DINESHKUMAR
6)Mrs. S. REVATHI
7)Mr. A. SAMPATH
8)Mr. S. RAGUL
9)Dr. K. AMUDHA
10)Dr. B. UMARANI
(72)**Name of Inventor :**
1) Dr. J. YOGAPRIYA
2)Dr. M. DHARMALINGAM
3)Dr. R. SHANKAR
4)Dr. C. SARAVANABHAVAN
5)Mr. M. DINESHKUMAR
6)Mrs. S. REVATHI
7)Mr. A. SAMPATH
8)Mr. S. RAGUL
9)Dr. K. AMUDHA
10)Dr. B. UMARANI

(57) Abstract :
The proposed innovation is concerned with the design and construction of a smart vision electric iron box that prevents clothing from being accidentally burned during the ironing or pressing process. The process of capturing the fabric image with a digital pin hole camera and extracting features from the fabric with a convolutional neural network is part of the iron box procedure. The heat control knob in the iron box automatically controls the heat applied to the fabric to prevent the clothes from being accidentally burned.

No. of Pages : 5 No. of Claims : 2

(12) PATENT APPLICATION PUBLICATION
(19) INDIA
(22) Date of filing of Application :19/06/2021
(21) Application No.202141027495 A
(43) Publication Date : 16/07/2021

(54) Title of the invention : INTELLIGENT COVID ALARM SYSTEM FOR THE DETECTION OF COVID PROTOCOL VIOLATION IN COVID CARE UNIT

(51) International classification :G06F0003048200, A45D0019100000, C07H0001060000, C12Q0001684800, G11B0007127500
(31) Priority Document No :NA
(32) Priority Date :NA
(33) Name of priority country :NA
(86) International Application No :PCT//
Filing Date :01/01/1900
(87) International Publication No : NA
(61) Patent of Addition to Application Number:NA
Filing Date :NA
(62) Divisional to Application Number :NA
Filing Date :NA

(71)**Name of Applicant :**
1)Fairoz B
Address of Applicant :Managing Director, Prosaf Appzenith Software Solutions Private Limited, Suriya Enclave 4th Main 11th cross JC Extension, Harihar -577601, Davangere, Karnataka, India Karnataka India
2)Dr.Sanjeev Gour
3)Dr. Shweta Vikram
4)Dr. Ashwini Kumar
5)Dr. Algubelly Yashwanth Reddy
6)Dr. Karuna nidhi Pandagre
7)Vaishali Kadwey
8)Rajesh Mathur
9)Abhra Pratip Ray
10)Manvi Sharma
11)Dr. Tanaji Dinkar Dabade
12)Dr.Rajvardhan M. Indi
13)Dr. Ramchandra Govind Pawar
(72)**Name of Inventor :**
1)Fairoz B
2)Dr.Sanjeev Gour
3)Dr. Shweta Vikram
4)Dr. Ashwini Kumar
5)Dr. Algubelly Yashwanth Reddy
6)Dr. Karuna nidhi Pandagre
7)Vaishali Kadwey
8)Rajesh Mathur
9)Abhra Pratip Ray
10)Manvi Sharma
11)Dr. Tanaji Dinkar Dabade
12)Dr.Rajvardhan M. Indi
13)Dr. Ramchandra Govind Pawar

(57) Abstract :
The present invention relates to intelligent covid alarm system for the detection of covid protocol violation in covid care unit. The objective of the present invention is to solve the problems in the prior art technologies related to covid-19 monitoring in the covid care unit

No. of Pages : 30 No. of Claims : 3

(12) PATENT APPLICATION PUBLICATION
(21) Application No.202141027573 A
(19) INDIA
(22) Date of filing of Application :20/06/2021
(43) Publication Date : 16/07/2021

(54) Title of the invention : INTEGRATED APPROACH FOR MACHINE LEARNING SCHEME FOR HUMAN DNA SEQUENCE

(51) International classification	:G06F0021620000, G06N0020000000, H04L0029060000, G06K0009620000, G06F0016280000	(71)**Name of Applicant :** **1)d nagaraju** Address of Applicant :D Nagaraju Associate professor Audisankara College of Engineering and Technology Andhra Pradesh India **2)Dr.P.Chandra Kanth**
(31) Priority Document No	:NA	(72)**Name of Inventor :** **1)Dr.P.Chandra Kanth** **2)d nagaraju**
(32) Priority Date	:NA	
(33) Name of priority country	:NA	
(86) International Application No	:PCT// /	
Filing Date	:01/01/1900	
(87) International Publication No	: NA	
(61) Patent of Addition to Application Number	:NA	
Filing Date	:NA	
(62) Divisional to Application Number	:NA	
Filing Date	:NA	

(57) Abstract :
Abstract-The dramatic growth in the machine learning domain has brought in diversified significant features and quantified nonlinear associations among the data derived from medical datasets. The medical datasets contain sensitive data that need to be preserved without influencing the associated classification process through effective and reliable data perturbation technique that are robust before the enforcement of ensemble classification process.In this paper, an integrated Condensation Algorithm imposed Privacy Preserving Rotation-based Data Perturbation and Ensemble Classification Scheme for protecting sensitive data in medical data sets. This Condensation Algorithm-based Data Perturbation (CADP) is facilitated through the construction of homogenous groups determined based on the distances between tuple. It also generates a rotation matrix for conducting rotation perturbation that ensures higher data sensitivity protection before it is released for the classification process.

No. of Pages : 7 No. of Claims : 2

(12) PATENT APPLICATION PUBLICATION
(21) Application No.202141027589 A
(19) INDIA
(22) Date of filing of Application :21/06/2021
(43) Publication Date : 16/07/2021

(54) Title of the invention : INSTANT SWEET DELICACY

(51) International classification	:A23C0009156000, A23L0002395000, C13B0050000000, A23K0020220000, A21D0008020000	(71)**Name of Applicant :** **1)MANJILAS FOOD TECH PRIVATE LIMITED** Address of Applicant :TC-16-1382, SASTHRI ROAD, NELLIKKUNNU, THRISSUR-5, KERALA, INDIA. Kerala India
(31) Priority Document No	:NA	(72)**Name of Inventor :**
(32) Priority Date	:NA	**1)VINOD MANJILA**
(33) Name of priority country	:NA	
(86) International Application No	:NA	
Filing Date	:NA	
(87) International Publication No	: NA	
(61) Patent of Addition to Application Number	:NA	
Filing Date	:NA	
(62) Divisional to Application Number	:NA	
Filing Date	:NA	

(57) Abstract :
ABSTRACT INSTANT SWEET DELICACY The present invention relates to an instant sweet delicacy, particularly parippu pradhaman that can be reconstituted in just 8 to 10 minutes in boiling water before consumption. The instant sweet delicacy is ready and convenient to use, having a prolonged shelf life of up to 4 months. In one aspect, the instant sweet delicacy is prepared from green gram, coconut scrapings, melted jaggery cubes, rice powder, sugar powder, milk powder, cardamom powder, salt and sugar powder.

No. of Pages : 17 No. of Claims : 17

(12) PATENT APPLICATION PUBLICATION
(21) Application No.202141027865 A
(19) INDIA
(22) Date of filing of Application :22/06/2021
(43) Publication Date : 16/07/2021

(54) Title of the invention : DEVELOPMENT OF KIT FOR PLANT-BASED SEED COATINGS TO AID INHIBITION OF SEED BORNE INFECTIONS FOR VALUE ADDED CROP CULTIVATION

(51) International classification	:A01C0001060000, C12N0009020000, C09D0133060000, H02S0020100000, A01G0013000000	(71)**Name of Applicant :** **1)Dr. Veena V** Address of Applicant :Department of Biotechnology, School of Applied Sciences REVA University, Bengaluru Karnataka-560064 Karnataka India
(31) Priority Document No	:NA	**2)Dr. Harikrishnan A**
(32) Priority Date	:NA	**3)Ms Supreetha BS**
(33) Name of priority country	:NA	**4)Ms. Anuja Nagpure**
(86) International Application No	:NA	(72)**Name of Inventor :**
Filing Date	:NA	**1)Dr. Veena V**
(87) International Publication No	: NA	**2)Dr. Harikrishnan A**
(61) Patent of Addition to Application Number	:NA	**3)Ms Supreetha BS**
Filing Date	:NA	**4)Ms. Anuja Nagpure**
(62) Divisional to Application Number	:NA	
Filing Date	:NA	

(57) Abstract :
This present investigation relates to the development of kits for ease of seed coating based on the size of seed and crop variety. This kit will aid easy seed coating from small scale cultivation to automatic coating for large scale cultivation purpose. This kit is eco-friendly and aid the to control the seed borne fungi for long term storage and aid germination of disease-free cultivation.

No. of Pages : 10 No. of Claims : 8

(12) PATENT APPLICATION PUBLICATION
(21) Application No.202141028036 A
(19) INDIA
(22) Date of filing of Application :22/06/2021
(43) Publication Date : 16/07/2021

(54) Title of the invention : A hybrid energy harvesting system with improved solar efficiency

(51) International classification	:H01L0031054000, H02S0040440000, H01L0035300000, H01L0035000000, H02S0010100000
(31) Priority Document No	:NA
(32) Priority Date	:NA
(33) Name of priority country	:NA
(86) International Application No	:PCT//
Filing Date	:01/01/1900
(87) International Publication No	: NA
(61) Patent of Addition to Application Number	:NA
Filing Date	:NA
(62) Divisional to Application Number	:NA
Filing Date	:NA

(71)**Name of Applicant :**
1)Dr. Dadamiah PMD Shaik
Address of Applicant :Professor, LORDS Institute of Engineering and Technology, Hyderabad, Telangana Telangana India
2)Dr. Md Sameer Ahmed
3)Dr. Shaik Fakruddin Babavali
4)Dr. Rehana Anjum
5)Ms. Anjum Begum
6)Dr. Shahzad Ahmad
7)Dr. Vikram Neerugatti
(72)**Name of Inventor :**
1)Dr. Rehana Anjum
2)Dr. Dadamiah PMD Shaik
3)Dr. Md Sameer Ahmed
4)Ms. Anjum Begum
5)Dr. Shaik Fakruddin Babavali
6)Dr. Shahzad Ahmad

(57) Abstract :
The present invention relates to a hybrid energy harvesting system with improved solar efficiency. The solar cell is integrated with an array of thermoelectric generators. The photovoltaic cell converts the small amount of solar energy into electricity and the remaining solar energy produce heat in the system. The heat produced during this process can also be converted in to electricity by the help of array of thermoelectric generators. The first solar irradiation concentrator (110) collects the sun lights and the photovoltaic cell (120) converts a part of incident light into electricity. The generated waste is further concentrated on the second solar irradiation concentrator (130) and passes the heat on to the array of Thermoelectric generators (140) which are connected electrically in series. The Thermoelectric generators (140) are placed on the heat sink (150). The thermoelectric generators (140) utilize the Seebeck effect and the excess heat is converted into electricity.

No. of Pages : 21 No. of Claims : 8

(12) PATENT APPLICATION PUBLICATION
(21) Application No.202141028074 A
(19) INDIA
(22) Date of filing of Application :22/06/2021
(43) Publication Date : 16/07/2021

(54) Title of the invention : NANO BIO STERLIZER WITH A PHOTON GUN

(51) International classification	:A61L0009200000, A61L0002100000, A61L0009220000, B01D0053000000, B01D0053750000
(31) Priority Document No	:NA
(32) Priority Date	:NA
(33) Name of priority country	:NA
(86) International Application No	:PCT//
Filing Date	:01/01/1900
(87) International Publication No	: NA
(61) Patent of Addition to Application Number	:NA
Filing Date	:NA
(62) Divisional to Application Number	:NA
Filing Date	:NA

(71)**Name of Applicant :**
1)MANVIS STUDIO
Address of Applicant :Flat No. 202, Sri Krishna Sai Apartments, Near Yousufguda Check Post, Yousufguda, Hyderabad 500 045, Telangana State, India. Telangana India
(72)**Name of Inventor :**
1)DR AVASARALA VENKATESWARA RAO

(57) Abstract :
A wall/ table mountable nano bio sterilizer is disclosed. The nano bio sterilizer mainly consists of a photon gun, a UV-C lamp (110), and an exhaust fan (112). The photon gun comprises one side opening and is being electrolyzed and painted with layers of titanium dioxide (114) in the inside. The UV-C light emitting source (110) placed at the middle of the photon gun for bombardment of UV-C energy with nano metals and creates negative ions from the photon gun. The exhaust fan is placed at the end of the photo gun, (i.e., at the open end of the hollow sectional box) to propel generated electronic ions from the device. The photon gun releases powerful plasma with help of the exhaust module after intensified bombardment of UV-C magnetic field energy with bandwidth of band spectrum UV-C on the PCO materials coated in the photon gun. The emitted plasma containing powerful oxidants like hydroxyl radicals, super oxide ions and hydro peroxides and ozone ions capable of oxidizing air borne diseases, viruses and bacteria in a room.

No. of Pages : 12 No. of Claims : 10

(12) PATENT APPLICATION PUBLICATION
(21) Application No.202141028493 A
(19) INDIA
(22) Date of filing of Application :24/06/2021
(43) Publication Date : 16/07/2021

(54) Title of the invention : HYDROGEN PRODUCING CLOSED-LOOP FUEL CELL AND METHOD OF FABRICATION THEREOF

(51) International classification	:H01M0004920000, H01M0008042230, H01M0008040820, H01M0008100700, H01M0008100400	(71)**Name of Applicant :** **1)PRABAHARAN, Savari Rathinam Sahaya** Address of Applicant :16, Vijay Raja Spruce, Thavesh Avenue, Pudupakkam, Tamil Nadu-603103, India Tamil Nadu India **2)SESHADRI, Harinipriya**
(31) Priority Document No	:NA	
(32) Priority Date	:NA	
(33) Name of priority country	:NA	(72)**Name of Inventor :** **1)SESHADRI, Harinipriya** **2)PRABAHARAN, Savari Rathinam Sahaya**
(86) International Application No	:PCT// /	
Filing Date	:01/01/1900	
(87) International Publication No	: NA	
(61) Patent of Addition to Application Number	:NA	
Filing Date	:NA	
(62) Divisional to Application Number	:NA	
Filing Date	:NA	

(57) Abstract :
The present invention provides a hydrogen producing fuel cell employing conducting polymer (CP) electro-catalysts, wherein the CP is electrochemically coated on a clean Stainless Steel (SS) substrate in presence of an acid to form a protonated CP coated SS. The protonated CP coated SS is used both as anode and as cathode in the fuel cell, wherein the anode chamber is filled with an acid and the cathode chamber is filled with a base. The fuel cell operates by transferring protons from the anode to the cathode via the salt bridge, wherein the protons reduce to hydrogen (H2) gas at the cathode, and the generated H2 gas is fed into the anodic chamber, where the H2 gas is oxidized to protons again, making it a continuous cycle, forming a closed loop operation. The fuel cell possesses specific capacity of 212.9 F/g, and a single cell voltage is 0.88 V.

No. of Pages : 51 No. of Claims : 17

(12) PATENT APPLICATION PUBLICATION
(21) Application No.202141028539 A
(19) INDIA
(22) Date of filing of Application :25/06/2021
(43) Publication Date : 16/07/2021

(54) Title of the invention : AUTOMATIC SOLAR TRACKING AND CLEANING MECHANISUM

(51) International classification	:H02S0040100000, H01L0031042000, H02S0020320000, H02S0040220000, H02S0010000000
(31) Priority Document No	:NA
(32) Priority Date	:NA
(33) Name of priority country	:NA
(86) International Application No	:NA
Filing Date	:NA
(87) International Publication No	: NA
(61) Patent of Addition to Application Number	:NA
Filing Date	:NA
(62) Divisional to Application Number	:NA
Filing Date	:NA

(71)**Name of Applicant :**
1) Dr. PRAMEELA KUMARI N
Address of Applicant :SCHOOL OF ECE, REVA UNIVERSITY, RUKMINI KNOWLEDGE PARK, KATTIGENA HALLI, YELAHANKA, BANGALORE, KARNATAKA, INDIA - 560 064. Karnataka India
2)AMRUTA DESHPANDE
3)SHEELA S
4)B ANJALI
5)MANVI ISHWARYA
(72)**Name of Inventor :**
1) Dr. PRAMEELA KUMARI N
2)AMRUTA DESHPANDE
3)SHEELA S
4)B ANJALI
5)MANVI ISHWARYA

(57) Abstract :
Electricity is one of thenecessities of mankind. As its demand increases, there is a need to explorethe possible renewable sources of energy. Being the vast and most abundant, use of solar energy could be beneficial to a larger extent. In a general survey, we observe that the solar PV modules are generally employed in dust environments. Accumulation of dust on top surface of the module blocks the incident rays from the sun, thus reducing its potential. Due to this the power output reduces by more than 30% or even more depending on the surrounding environment. So, it becomes veryimportant to clean the PV panel surface to increase the potential levels and thus its overall efficiency. In this project, we propose a Solar PV panel design, which not only tracks sun but also cleans the module automatically. To clean the solar panels, our proposed design consists of a remodelled wiper along with a DC motor. This DC motor helps in moving the wiper on the panel from one end to the other end. It is also observed that, not just the removal of dust but also tilting the panel according to the direction of the sun increases the efficiency of the panels. Hence in our model we use LDRs to track and tilt the panel according to the sun's direction for maximum intensity absorption. Thus the proposed design and methodology not just cleans the panels but also increases the overall efficiency and electricity production to its maximum potential.

No. of Pages : 6 No. of Claims : 1

(12) PATENT APPLICATION PUBLICATION
(19) INDIA
(22) Date of filing of Application :26/06/2021
(21) Application No.202141028806 A
(43) Publication Date : 16/07/2021

(54) Title of the invention : PLASTIC TILES FROM GARBAGE WASTE

(51) International classification	:B29B0017040000, B29B0017000000, C10G0001100000, C10B0053070000, B29B0017020000
(31) Priority Document No	:NA
(32) Priority Date	:NA
(33) Name of priority country	:NA
(86) International Application No	:PCT//
Filing Date	:01/01/1900
(87) International Publication No	: NA
(61) Patent of Addition to Application Number	:NA
Filing Date	:NA
(62) Divisional to Application Number	:NA
Filing Date	:NA

(71)**Name of Applicant :**
1)ALLEN JEFFREY J
Address of Applicant :Assistant Professor, Department of Mechanical Engineering, Loyola Institute of Technology, Palanchur, Chennai, Tamil Nadu, India Tamil Nadu India
(72)**Name of Inventor :**
1)ANBAZHAGAN A
2)ALLEN JEFFREY J
3)SIVAKUMAR A
4)NAVEEN KUMAR R
5)BARATHIRAJA K
6)PRASANTH P
7)SARAVANAN E
8)SHILBIN RAJA RJ
9)ARUN M
10)PRAKASH S
11)SHAKIN A

(57) Abstract :
ABSTRACT PLASTIC TILES FROM GARBAGE WASTE This invention is related to the field of recycling waste. More particularly the invention provides a novel system and method for recycling of plastic waste products. Waste plastic products are collected and melted. M-Sand in the ratio of 2:1 is added to this and the resultant mixture is cast in prefabricated moulds. After cooling, the moulds are unmoulded to obtain plastic tiles. This method of conversation of waste plastics to some useable tiles helps us to reduce the quantity of waste plastics which causes global warming .

No. of Pages : 24 No. of Claims : 1

(12) PATENT APPLICATION PUBLICATION
(19) INDIA
(22) Date of filing of Application :26/06/2021
(21) Application No.202141028809 A
(43) Publication Date : 16/07/2021

(54) Title of the invention : IMPROVED SIGNUM ERROR LMS METHOD FOR DIRECTIONS-OF-ARRIVAL ESTIMATION OF RADIO SIGNALS USING ROTATIONAL INVARIANCE TECHNIQUE

(51) International classification	:H04B0007041300, G01S0003140000, H04B0007080000, H03M0013390000, G01S0003740000
(31) Priority Document No	:NA
(32) Priority Date	:NA
(33) Name of priority country	:NA
(86) International Application No	:PCT//
Filing Date	:01/01/1900
(87) International Publication No	: NA
(61) Patent of Addition to Application Number	:NA
Filing Date	:NA
(62) Divisional to Application Number	:NA
Filing Date	:NA

(71)**Name of Applicant :**
1)Dr. Veerendra Dakulagi
Address of Applicant :Associate Professor, Dept. of E&CE, Guru Nanak Dev Engineering College, Bidar, Karnataka, INDIA. Mob: +91-829672160. Karnataka India
2)Dr. Sunilkumar S Manvi
3)Nirmalkumar S. Benni
4)Dr. B. N. Umesh
5)Prof. Rashmi N
6)Mr. Vishwanath Bijalwan
7)Dr. Kim Ho Yeap
8)Dr.Tapan Kumar Mandal
9)Dr. H C Sateesh Kumar
10)Dr. Ratneshwar Kumar Ratnesh
11)Dr. Manoj Kumar Panda
12)Prof. Shwetha N
13)Prof. Sangeetha N
14)Mrs. Mamatha M C
15)Mr. Arun Shekhar Bahuguna
(72)**Name of Inventor :**
1)Dr. Veerendra Dakulagi
2)Dr. Sunilkumar S Manvi
3)Nirmalkumar S. Benni
4)Dr. B. N. Umesh
5)Prof. Rashmi N
6)Mr. Vishwanath Bijalwan
7)Dr. Kim Ho Yeap
8)Dr.Tapan Kumar Mandal
9)Dr. H C Sateesh Kumar
10)Dr. Ratneshwar Kumar Ratnesh
11)Dr. Manoj Kumar Panda
12)Prof. Shwetha N
13)Prof. Sangeetha N
14)Mrs. Mamatha M C
15)Mr. Arun Shekhar Bahuguna

(57) Abstract :
Adaptive antennas are deployed on satellites, base stations, aircraft, ships, and vehicles are playing a crucial role in improving the system capacities in wireless communication. Most of the classical techniques for the direction-of-arrival (DOA) estimation require the eigenvalue decomposition (EVD) and estimation of the source covariance matrix (SCM) which certainly increases the complexity of computation. This hinders the use of such methods in an advanced communication system. To outwit this issue, in our work, we propose a new technique for direction-of-arrival (DOA) estimation of mobile signals using the signum error least mean square (SELMS) beam forming method. We obtain the power spectrum of the user signal exploiting the rotational invariance technique. The proposed method is expected to give approximately 30-40% of improvement in convergence rate over the conventional LMS algorithm. Also, DOAs can be estimated with great efficacy without computing SCM and its eigenvalue.

No. of Pages : 11 No. of Claims : 4

(12) PATENT APPLICATION PUBLICATION
(21) Application No.202141028833 A
(19) INDIA
(22) Date of filing of Application :27/06/2021
(43) Publication Date : 16/07/2021

(54) Title of the invention : OPTIMIZED ULTRALARGE SCALE SOC TEST CONTROL ARCHITECTURE WITH SCAN TEST FOR BANDWIDTH MANAGEMENT

(51) International classification	:G01R0031318500, H01L0027120000, H01S0003160000, G01R0031317700, G11C0029400000
(31) Priority Document No	:NA
(32) Priority Date	:NA
(33) Name of priority country	:NA
(86) International Application No	:PCT//
Filing Date	:01/01/1900
(87) International Publication No	: NA
(61) Patent of Addition to Application Number	:NA
Filing Date	:NA
(62) Divisional to Application Number	:NA
Filing Date	:NA

(71)**Name of Applicant :**
1)K. MADHAVA RAO
Address of Applicant :ASSISTANT PROFESSOR, DEPARTMENT OF ECE, B V RAJU INSTITUTE OF TECHNOLOGY NARSAPUR, MEDAK(dt), TELANGANA, PIN 502313 Telangana India
2)Dr T.VASUDEVA REDDY
3)ABDULRAHAMAN SHAIK
4)MUDASAR BASHA
5)ASHA RANI.P
6)K. CHARAN KUMAR
7)Dr YARRA NARESH
(72)**Name of Inventor :**
1)K. MADHAVA RAO
2)Dr T.VASUDEVA REDDY
3)ABDULRAHAMAN SHAIK
4)MUDASAR BASHA
5)ASHA RANI.P
6)K. CHARAN KUMAR
7)Dr YARRA NARESH

(57) Abstract :
This innovation presents various methods for solving issues using scan bandwidth management for big industrial multi-core system-on-chip (SoC) architectures with built-in compression test data. The channel management system, flow, and tools provide critical difficulties in these architectures. Several logic testing designs make it easier to plan preemptive SoC circuits with an integrated deterministic compression of test-based data in this innovation. In actual applications, the same methods may effectively manage physical limitations. Last but not least, state-of-the-art algorithms for SoC test planning are re-designed to establishing timed, efficient test configurations, optimizing SoC pin partitions, and assigning core channel levels based on the volume of scans.

No. of Pages : 22 No. of Claims : 4

(12) PATENT APPLICATION PUBLICATION
(19) INDIA
(22) Date of filing of Application :27/06/2021
(21) Application No.202141028836 A
(43) Publication Date : 16/07/2021

(54) Title of the invention : A SYSTEM FOR PROVIDING HARDWARE ACCESS USING A VIRTUAL MACHINE ENVIRONMENT WITH A USER AUTHENTICATION

(51) International classification :G06F0009455000, H04L0029060000, G06F0009500000, H04L0009320000, G06F0012020000
(31) Priority Document No :NA
(32) Priority Date :NA
(33) Name of priority country :NA
(86) International Application No :PCT//
Filing Date :01/01/1900
(87) International Publication No : NA
(61) Patent of Addition to Application Number:NA
Filing Date :NA
(62) Divisional to Application Number :NA
Filing Date :NA

(71)**Name of Applicant :**
1)Dr.B.Chandrababu Naik
Address of Applicant :Associate Professor, Department of Electronics & Communication Engineering, Chadalawada Ramanamma Engineering College (Autonomous), Tirupati, Andhra Pradesh, India. Pin Code:517506 Andhra Pradesh India
2)Dr.MD Javeed Ahammed
3)Dr.Pilli Lalitha Kumari
4)Ms.V.Ramya
5)Mr.Koraveni Vijay
6)Mrs.K.Sivasankari
7)Dr.Sushma Jaiswal
8)Mr.Tarun Jaiswal
9)Dr.Rabinarayan Satpathy
10)Dr.Pavithra G
(72)**Name of Inventor :**
1)Dr.B.Chandrababu Naik
2)Dr.MD Javeed Ahammed
3)Dr.Pilli Lalitha Kumari
4)Ms.V.Ramya
5)Mr.Koraveni Vijay
6)Mrs.K.Sivasankari
7)Dr.Sushma Jaiswal
8)Mr.Tarun Jaiswal
9)Dr.Rabinarayan Satpathy
10)Dr.Pavithra G

(57) Abstract :
A SYSTEM FOR PROVIDING HARDWARE ACCESS USING A VIRTUAL MACHINE ENVIRONMENT WITH A USER AUTHENTICATION [034] The present invention discloses a system for providing hardware or appliance access using a virtual machine environment with a user authentication in an IoT connectivity. The system includes one or more processors and microcontrollers connected in a computer network with a centralized located processing unit having a plurality of virtualization layers. Each of the virtualization layers is configured with the virtual machines VMs, and further, each of the VMs is having its particular authentication service with the requisite user identification steps.

No. of Pages : 20 No. of Claims : 10

(12) PATENT APPLICATION PUBLICATION
(19) INDIA
(22) Date of filing of Application :29/06/2021
(21) Application No.202141029253 A
(43) Publication Date : 16/07/2021

(54) Title of the invention :A NUTMEG DECORTICATOR WITH SORTER-GRADER BASED ON MACHINE LEARNING. •

(51) International classification	:G06N0020000000, A23N0005000000, B07B0013040000, B65G0047960000, B07B0013000000
(31) Priority Document No	:NA
(32) Priority Date	:NA
(33) Name of priority country	:NA
(86) International Application No	:PCT//
Filing Date	:01/01/1900
(87) International Publication No	: NA
(61) Patent of Addition to Application Number	:NA
Filing Date	:NA
(62) Divisional to Application Number	:NA
Filing Date	:NA

(71)**Name of Applicant :**
1)Emmanuel Babu Pukkunnen
Address of Applicant :Assistant Professor, Department of Electrical & Electronics Engineering, Mar Athanasius College of Engineering, College P.O, Kothamangalam 686666, Kerala, India Kerala India
2)Thomas P. Rajan
3)Eldhose K. A.
4)Smitha Paulose
5)Neena M. Joseph
6)Dr. S. Balasubramaniam
7)Dr. Subiramoniyan S
8)Dr. Tony George
9)Dr. Jenopaul P.
10)Dr. Bos Mathew Jos
11)Arun Eldho Alias
12)Tom Jacob
13)Krishnaprasad T S
14)Bazil Bijoy
15)Ruby N A
(72)**Name of Inventor :**
1)Emmanuel Babu Pukkunnen
2)Thomas P. Rajan
3)Eldhose K. A.
4)Smitha Paulose
5)Neena M. Joseph
6)Dr. S. Balasubramaniam
7)Dr. Subiramoniyan S
8)Dr. Tony George
9)Dr. Jenopaul P.
10)Dr. Bos Mathew Jos
11)Arun Eldho Alias
12)Tom Jacob
13)Krishnaprasad T S
14)Bazil Bijoy
15)Ruby N A

(57) Abstract :
The nutmeg decorticator with sorter-grader based on machine comprising to machine for the purpose of de-hulling and/or shell decortications required for extraction of kernel(s), and more specifically provides an efficient decorticator machine for extracting the kernel(s) from the hull and/or shell thereby separating the extracted kernel(s) from the cracked, residual hull/shells and its method of operation thereof. More particularly present invention relates to the machine is operated by machine learning and artificial intelligence, also improve and record all data with respect to time so identify the sorting objects and waste collections. Also the plurality of sorting platform has sorting conveyor arranged together with variable gaps between the plates with the gaps varying based on size of the dry fruit/s/ objects and store in store compartment and after that move into the packaging. And feeding the dry fruit/s / objects having hard shell into a decortication tank of the provided in machine.

No. of Pages : 24 No. of Claims : 10

(12) PATENT APPLICATION PUBLICATION
(21) Application No.202141029261 A
(19) INDIA
(22) Date of filing of Application :29/06/2021
(43) Publication Date : 16/07/2021

(54) Title of the invention : WOODEN BIPED TOY PERFORMING FORWARD MOVEMENT BY CAM ACTUATION AND REACTION BY FEET MEMBER

(51) International classification	:A63H0013000000, B62D0057032000, A63H0033000000, A63H0033260000, A63H0003280000	(71)**Name of Applicant :** **1)KRITHIKANAND KRISHNAMOORTHY** Address of Applicant :337, 14TH MAIN, R.M.V EXTENSION, SADASHIVNAGAR, BENGALURU Karnataka India
(31) Priority Document No	:NA	(72)**Name of Inventor :**
(32) Priority Date	:NA	**1)KRITHIKANAND KRISHNAMOORTHY**
(33) Name of priority country	:NA	
(86) International Application No	:PCT// /	
Filing Date	:01/01/1900	
(87) International Publication No	: NA	
(61) Patent of Addition to Application Number	:NA	
Filing Date	:NA	
(62) Divisional to Application Number	:NA	
Filing Date	:NA	

(57) Abstract :
ABSTRACT:WOODEN BIPED TOY PERFORMING FORWARD MOVEMENT BY CAM ACTUATION AND REACTION BY FEET MEMBER" The Indian wooden toy market needs innovative and low cost products. Hence given here are the details of the invention of a Wooden Biped toy (1) which can address the entertainment of children, specifically above the age of five years by the method of assembly and forward movement. The said toy (1) consists of an audio playback module (18) and a microcontroller circuit board (33) which is battery powered (14). A single servo motor is connected to a Cam (15) to alternatively actuate the legs (16, 17) and the corresponding reaction by the feet member (23) causes the said legs (16, 17) and hence the toy (1) to move forward. The wooden parts of the toy (1) are made from toy wood i.e oak or ivory and compressed hardboard. Also, used furniture wood made of compressed hardboard can be reused for making the parts of the said toy (1) to add an economic value. [Figure. 8a for publication] [FIG. 8A]

No. of Pages : 46 No. of Claims : 12

(12) PATENT APPLICATION PUBLICATION
(19) INDIA
(22) Date of filing of Application :29/06/2021
(21) Application No.202141029268 A
(43) Publication Date : 16/07/2021

(54) Title of the invention : AN ENERGY-EFFICIENT THERMODYNAMICS CYCLE TO LIQUIFY BIOMETHANE ON A MICRO SCALE

(51) International classification :C10L0003100000, F01K0025100000, F25J0001000000, B23K0001000000, A61M0037000000
(31) Priority Document No :NA
(32) Priority Date :NA
(33) Name of priority country :NA
(86) International Application No :PCT//
Filing Date :01/01/1900
(87) International Publication No : NA
(61) Patent of Addition to Application Number:NA
Filing Date :NA
(62) Divisional to Application Number :NA
Filing Date :NA

(71)**Name of Applicant :**
1)Mr. J.LEO AMALRAJ
Address of Applicant :ASSOCIATE PROFESSOR, DEPARTMENT OF MATHEMATICS, RMK COLLEGE OF ENGINEERING AND TECHNOLOGY, RSM NAGAR, PUDUVOYAL, TAMIL NADU- 601206. Tamil Nadu India
2)Mr. PARTHASARATHY. K
3)Mr. T CH ANIL KUMAR
4)Dr.A.PARTHIBAN
5)Dr. SANJAY KUMAR. S. M
6)NANDAGOPAL KALIAPPAN
7)Dr. VEERESH FUSKELE
8)Dr. MOTI LAL RINAWA
9)DHARMA TEJA LAKKU
10)Mr. AMOL L. MANGRULKAR
11)Dr. S S P M SHARMA B
12)Dr. M.RAMARAO
13)Dr.S.SATHISH
(72)**Name of Inventor :**
1)Mr. J.LEO AMALRAJ
2)Mr. PARTHASARATHY. K
3)Mr. T CH ANIL KUMAR
4)Dr.A.PARTHIBAN
5)Dr. SANJAY KUMAR. S. M
6)NANDAGOPAL KALIAPPAN
7)Dr. VEERESH FUSKELE
8)Dr. MOTI LAL RINAWA
9)DHARMA TEJA LAKKU
10)Mr. AMOL L. MANGRULKAR
11)Dr. S S P M SHARMA B
12)Dr. M.RAMARAO
13)Dr.S.SATHISH

(57) Abstract :
The aim of this work is to propose an energy-efficient thermodynamic cycle which makes it possible to liquefy biomethane on a micro-scale (

No. of Pages : 25 No. of Claims : 4

(12) PATENT APPLICATION PUBLICATION
(19) INDIA
(22) Date of filing of Application :29/06/2021

(21) Application No.202141029270 A
(43) Publication Date : 16/07/2021

(54) Title of the invention : Quantization and training of Object detection using low bit width convolutional neural networks

(51) International classification	:G06N0003040000, G06N0003080000, G16H0030400000, G06N0007000000, G06K0009000000
(31) Priority Document No	:NA
(32) Priority Date	:NA
(33) Name of priority country	:NA
(86) International Application No	:PCT//
Filing Date	:01/01/1900
(87) International Publication No	: NA
(61) Patent of Addition to Application Number	:NA
Filing Date	:NA
(62) Divisional to Application Number	:NA
Filing Date	:NA

(71)**Name of Applicant :**
1)Mr.M. Chithik Raja
Address of Applicant :Lecturer, Information Technology, University of Technology and Applied Sciences, Oman. Oman
2)Dr.R.Winson
3)Dr. Kolappan Velayutham
4)Mr. Arun Kumar Ramamoorthy
5)Dr. K.L Muruganantha Prasad
6)Mr.S.Gouri Kiran Kumar
7)Dr. S. Brilly Sangeetha
8)Mr.Suresh Palarimath
9)Ms. Nandini Chakrapani
10)Mr. Shafeeque Pandikasala Narikuth
11)Ms .Padmapriya V K
(72)**Name of Inventor :**
1)Mr.M. Chithik Raja
2)Dr.R.Winson
3)Dr. Kolappan Velayutham
4)Mr. Arun Kumar Ramamoorthy
5)Dr. K.L Muruganantha Prasad
6)Mr.S.Gouri Kiran Kumar
7)Dr. S. Brilly Sangeetha
8)Mr.Suresh Palarimath
9)Ms. Nandini Chakrapani
10)Mr. Shafeeque Pandikasala Narikuth
11)Ms .Padmapriya V K

(57) Abstract :
In a variety of practical fields, such as mobile deployment, efficient neural network inference is essential. Low bit width arithmetic, which may then be accelerated by specialized hardware, is an efficient way to increase inference efficiency. However, it isn't easy to develop efficient measurement systems while preserving network accuracy. Current methods, in particular, are having difficulties completing end-to-end quantification, using aggressive low-bit width systems such as 4-bit, and applying quantified networks to complicated tasks like object recognition. We suggested in this invention to avoid these instabilities through the CNN-based network.
.

No. of Pages : 22 No. of Claims : 5

(12) PATENT APPLICATION PUBLICATION
(19) INDIA
(22) Date of filing of Application :29/06/2021

(21) Application No.202141029278 A
(43) Publication Date : 16/07/2021

(54) Title of the invention : SECURING PATIENTS HEALTH INFORMATION USING ATTRIBUTE BASED ENCRYPTION

(51) International classification	:A61B0005000000, H04L0029060000, G16H0010600000, A61B0005024000, H04W0012000000
(31) Priority Document No	:NA
(32) Priority Date	:NA
(33) Name of priority country	:NA
(86) International Application No	:PCT//
Filing Date	:01/01/1900
(87) International Publication No	: NA
(61) Patent of Addition to Application Number	:NA
Filing Date	:NA
(62) Divisional to Application Number	:NA
Filing Date	:NA

(71)**Name of Applicant :**

1)Sonya A, Assistant Professor/IT,B. S. Abdur Rahman Crescent Institute of Science and Technology, Chennai

Address of Applicant :Sonya A Assistant Professor Department of Information Technology B. S. Abdur Rahman Crescent Institute of Science and Technology Chennai, Tamil Nadu. Tamil Nadu India

2)S.Hariprasath,Assistant Professor/ECE,Saranathan College of Engineering,Trichy

3)S.Kother Mohideen, HoD and Research Head/IT, Sri Ram Nallamani Yadava College of Arts and Science, Tenkasi

4)Mohammad M. Othman, Assistant Professor/Physics, Salahaddin University, Iraq

5)B. Prakash, Assistant Professor/IT,Sri Venkateswara College of Engineering, Sriperumbudur

6)G Babu, Professor & Head/MCA,Adhiparasakthi Engineering College,Melmaruvathur

(72)**Name of Inventor :**

1)Sonya A, Assistant Professor/IT,B. S. Abdur Rahman Crescent Institute of Science and Technology, Chennai

2)S.Hariprasath,Assistant Professor/ECE,Saranathan College of Engineering,Trichy

3)S.Kother Mohideen, HoD and Research Head/IT, Sri Ram Nallamani Yadava College of Arts and Science, Tenkasi

4)Mohammad M. Othman, Assistant Professor/Physics, Salahaddin University, Iraq

5)B. Prakash, Assistant Professor/IT,Sri Venkateswara College of Engineering, Sriperumbudur

6)G Babu, Professor & Head/MCA,Adhiparasakthi Engineering College,Melmaruvathur

(57) Abstract :

Nowadays, securing the patients personal and physiological information electronically seems to be a challenging task for the medical professionals. To address this issue an Attribute Based Encryption (ABE) scheme is adopted in the Electronic Health (e-Health) industry to encrypt and digitally sign patient™s health information from providers and data from personal devices and sensors. In this scheme a text or information is encrypted using receiver™s public key for a specific receiver in conventional public-key cryptography method. The encryption uses arbitrary string as a public-key and the patient™s details are stored on the cloud storage for e-health applications. The administrators who are approved by the clients can only get the client's identities. The proposed work is being extended to view human vital signs, physiological states etc.. Privacy, safety and security are ensured and guaranteed in this approach.

No. of Pages : 13 No. of Claims : 4

(12) PATENT APPLICATION PUBLICATION
(21) Application No.202141029285 A
(19) INDIA
(22) Date of filing of Application :30/06/2021
(43) Publication Date : 16/07/2021

(54) Title of the invention : COST OPTIMIZATION OF FLEXIBLE PAVEMENT FOR CONVENTIONAL AND STABILIZED SUBGRADE USING BIO ENZYME

(51) International classification	:G06Q0010060000, G01N0001080000, E01C0003000000, E01C0003040000, E01C0021000000	(71)**Name of Applicant :** **1)Nandini D N** Address of Applicant :Assistant Professor, School of civil engineering, REVA University Karnataka India **2)Dr. Y Ramalinga Reddy**
(31) Priority Document No	:NA	(72)**Name of Inventor :**
(32) Priority Date	:NA	**1)Nandini D N**
(33) Name of priority country	:NA	**2)Dr. Y Ramalinga Reddy**
(86) International Application No	:NA	
Filing Date	:NA	
(87) International Publication No	: NA	
(61) Patent of Addition to Application Number	:NA	
Filing Date	:NA	
(62) Divisional to Application Number	:NA	
Filing Date	:NA	

(57) Abstract :
In developing countries like India, the growth in population has resulted in the need for economical and better operation of vehicles which in turn requires proper highway having required geometric design, condition and its overall maintenance. Therefore all the pavements should be properlymaintained so that it provides all requirements by Road users. Since the economic roads contributes to development of any country. Hence, here focusing on stabilizing different soil collected from various parts of Karnataka by Bio enzyme to fulfill the designing requirements of Pavement. The investigation onBio enzymewhich is a product of vegetable extract in soil stabilization is also examined. Once after stabilizing the different soil samples for various dosages, optimum dosage is determined, for which CBR values are determined for both Conventional and stabilized optimum dosages. And also designing the various layers of Pavement by using IRC Guidelines to calculate the difference in various layers of pavement for both stabilized and conventional subgrade soil.Comparing the Overall Cost of Flexible Pavement for both Stabilized and conventional subgrade soil for 1 Km stretch of Road and Recommending for Rural areas depending on traffic volume and Availability of Materials

No. of Pages : 6 No. of Claims : 3

(12) PATENT APPLICATION PUBLICATION
(21) Application No.202141029290 A
(19) INDIA
(22) Date of filing of Application :30/06/2021
(43) Publication Date : 16/07/2021

(54) Title of the invention : ENSURE ENTERPRISE ECONOMIC SECURITY BY INNOVATIVE ACTIVITIES USING STRATEGIC MARKETING MANAGEMENT

(51) International classification	:G06Q0030020000, G06Q0010060000, A63F0013822000, G09B0019180000, G06Q0010100000
(31) Priority Document No	:NA
(32) Priority Date	:NA
(33) Name of priority country	:NA
(86) International Application No	:NA
Filing Date	:NA
(87) International Publication No	: NA
(61) Patent of Addition to Application Number	:NA
Filing Date	:NA
(62) Divisional to Application Number	:NA
Filing Date	:NA

(71)**Name of Applicant :**
1)Mr.Venkata Naga Siva Kumar Challa,Ramachandra College of Engineering
Address of Applicant :Associate Professor Department of Management studies Ramachandra College of Engineering, Vatluru, Andhra Pradesh India 534007 Andhra Pradesh India
2)Dr. Nitu Maurya,Institute of Professional Excellence and Management
3)Ms.PSV Padmalatha,Ramachandra College of Engineering
4)Mr.Burra Vamsi Krishna,Ramachandra College of Engineering
5)Dr. Sanjay Ganesh Mishra,Shree L R Tiwari Degree College of Arts Commerce and Science
6)Dr.Mrinalini Pathak,Institute of Professional Excellence and Management
7)Mr. Manish Kumar,Institute of Applied Medicines and Research
8)Dr. Ravi Kumar Gupta,Madan Mohan Malaviya University of Technology
9)Mr. Bharat Gahlot,Mangalmay Institute of Management and Technology
10)Dr. Kumar Ratnesh, Dewan Institute of Management
(72)**Name of Inventor :**
1)Mr.Venkata Naga Siva Kumar Challa,Ramachandra College of Engineering
2)Dr. Nitu Maurya,Institute of Professional Excellence and Management
3)Ms.PSV Padmalatha,Ramachandra College of Engineering
4)Mr.Burra Vamsi Krishna,Ramachandra College of Engineering
5)Dr. Sanjay Ganesh Mishra,Shree L R Tiwari Degree College of Arts Commerce and Science
6)Dr.Mrinalini Pathak,Institute of Professional Excellence and Management
7)Mr. Manish Kumar,Institute of Applied Medicines and Research
8)Dr. Ravi Kumar Gupta,Madan Mohan Malaviya University of Technology
9)Mr. Bharat Gahlot,Mangalmay Institute of Management and Technology
10)Dr. Kumar Ratnesh, Dewan Institute of Management

(57) Abstract :
The role and place of economic safety in management of strategic marketing activity by enterprise is considered. The marketing used as tool in development of innovative activity of enterprise promoting increase of maintenance of economic safety that allow to trace economic threat occurrence of enterprise in market. The questions of development and realization of enterprise economic security strategies, economic security role and place in the strategic management process and the importance of strategic marketing interaction with innovation activity in system that provides economic security which supposes further study of the esteemed problem. The work defines the role and place of strategic marketing in management of innovation activity to provide economic security.

No. of Pages : 10 No. of Claims : 5

(12) PATENT APPLICATION PUBLICATION
(21) Application No.202141029307 A
(19) INDIA
(22) Date of filing of Application :30/06/2021
(43) Publication Date : 16/07/2021

(54) Title of the invention : MULTI PURPOSE NUT REMOVER

(51) International classification	:B25B0027000000, G09F0003020000, B60B0029000000, A61Q0001140000, A23N0005000000	(71)**Name of Applicant :** **1)VIT-AP UNIVERSITY** Address of Applicant :VIT-AP UNIVERSITY, Beside AP Secretariat, Near Vijayawada, Andhra Pradesh, India 522237. Andhra Pradesh India
(31) Priority Document No	:NA	(72)**Name of Inventor :**
(32) Priority Date	:NA	**1)Mr.Karthikeya Kolla**
(33) Name of priority country	:NA	**2)Dr.Pankaj Balkrishna Tambe**
(86) International Application No	:NA	**3)Mr.Ambuj Sharma**
Filing Date	:NA	
(87) International Publication No	: NA	
(61) Patent of Addition to Application Number	:NA	
Filing Date	:NA	
(62) Divisional to Application Number	:NA	
Filing Date	:NA	

(57) Abstract :
ABSTRACT OF THE INVENTION The Multi Purpose Nut remover is an all in one kind of device which helps humans or industries to remove nuts with ease, removing Nuts from anywhere is made easy with our Multi Purpose Nut remover. We have designed it in such a way that it can remove all 5 Nuts of tire with 112 PCD at a single time or you can remove a single nut of any size by using the attachment spindle from the middle. The female Nut removers can be attached to spindles as they are using a ball joint, so this makes it easy to remove any size of nuts. And the spindle attachment comes up with a threaded joint which can be used on need and removed when it is not required. So, this device can either be used to remove 5 nuts of a tire at a time or remove any nuts one after another using the spindle attachment. This can help a lot of automobile industries to save their time in removing tires. In my design, any size of female nut remover bits can be attached to the smaller shafts with the help of ball locking technology. Similarly, the automatic air gun and manual handle can be attached using a similar kind of locking. This is one of its kind designs and the inspiration behind this product is to make a design that is easy to understand by any person and which can be used by any age person. The Multi Purpose Nut remover is compatible unlike any other nut removers as it can multiple purposes within a single device.

No. of Pages : 16 No. of Claims : 4

(12) PATENT APPLICATION PUBLICATION
(21) Application No.202141029308 A
(19) INDIA
(22) Date of filing of Application :30/06/2021
(43) Publication Date : 16/07/2021

(54) Title of the invention : SANDWICH NANOCOMPOSITE PREPARATION TECHNIQUE FOR ORTHOPAEDIC APPLICATION

(51) International classification	:B82Y0030000000, C08J0005000000, C08K0009040000, A61F0002300000, A61F0002400000	(71)**Name of Applicant :** **1)VIT-AP UNIVERSITY** Address of Applicant :VIT-AP UNIVERSITY, Beside AP Secretariat, Near Vijayawada, Andhra Pradesh, India 522237. Andhra Pradesh India
(31) Priority Document No	:NA	(72)**Name of Inventor :**
(32) Priority Date	:NA	**1)Mr. Nilesh Dalai**
(33) Name of priority country	:NA	**2)Dr. P S Rama Sreekanth**
(86) International Application No	:NA	
Filing Date	:NA	
(87) International Publication No	: NA	
(61) Patent of Addition to Application Number	:NA	
Filing Date	:NA	
(62) Divisional to Application Number	:NA	
Filing Date	:NA	

(57) Abstract :
ABSTRACT OF THE INVENTION Ultra high molecular weight polyethylene (UHMWPE) remains a primary choice of material for load bearing applications in total joint arthroplasty. Superior mechanical properties and wear resistance are unique to its performance. However, the addition of nanomaterials has improved its properties significantly. In the present study, a novel sandwich configuration has been considered to achieve unique surface and bulk properties specific to these sandwich composites. UHMWPE was reinforced at various loadings of 0.1, 0.3, 0.5, and 0.7 wt. % by surface modified Nano-diamond (ND). It is observed that the young's modulus, yield stress, fracture stress and toughness of UHMWPE were improved by 15, 31, 30, and 49.6% respectively at the optimum loading of 0.5 wt. %ND filler. The % of elongations and impact strength showed best results at 0.3 wt. % ND. Sandwich nanocomposites were prepared with the optimum loading of 0.3 & 0.5 wt. % ND and assessed for their properties and behaviour. The sectional hardness of sandwich nanocomposites revealed the cross-sectional variation of properties of the material. The reasons for diminution of the mechanical properties of nanocomposites and sandwich nanocomposites were also ascertained by rheological studies. The vibration response, damping behaviour, water contact angle and density of the composites which influence the longevity of the implant material were also assessed. The sandwich composite (PE 0.3ND - PE - PE 0.3ND) has shown better performance in all respect as compare toSWl and SW3 composite due to good intermingling between the adjacent layers. It is concluded that the existence of ND improved the surface properties and mechanical properties of UHMWPE. However, sandwich nanocomposites have shown better properties unique unto itself.

No. of Pages : 10 No. of Claims : 7

(12) PATENT APPLICATION PUBLICATION
(19) INDIA
(22) Date of filing of Application :30/06/2021
(21) Application No.202141029313 A
(43) Publication Date : 16/07/2021

(54) Title of the invention : AN AI-ASSISTED, LIQUID-BASED UNIVERSAL FOCAL LENGTH ADJUSTABLE EYEGLASSES

(51) International classification	:G02B0026000000, G02B0003140000, H04Q0003000000, G02B0003120000, H04R0017000000
(31) Priority Document No	:NA
(32) Priority Date	:NA
(33) Name of priority country	:NA
(86) International Application No	:NA
Filing Date	:NA
(87) International Publication No	: NA
(61) Patent of Addition to Application Number	:NA
Filing Date	:NA
(62) Divisional to Application Number	:NA
Filing Date	:NA

(71)**Name of Applicant :**
1)Dr. M JAIGANESH
Address of Applicant :S/o. S MAHALINGAM, ASSOCIATE PROFESSOR, INFORMATION SCIENCE AND ENGINEERING, FACULTY OF ENGINEERING AND TECHNOLOGY, JAIN UNIVERSITY, BANGALORE - 560069, KARNATAKA, INDIA. Karnataka India
(72)**Name of Inventor :**
1)Dr. M JAIGANESH
2)ARUN NAGARAJA
3)MATHIYALAGAN R
4)Dr. A NOBLE MARY JULIET
5)Dr. UMA BOREGOWDA
6)SOUMYA K N
7)SHRUTHI SREE SH
8)Dr. M AMUTHA PRABHAKAR
9)MERCY S
10)Dr. R NAGARAJA
11)Dr. G N BALAJI

(57) Abstract :
The present invention finds the threshold values to give input to the piezoelectric pistons. The novel method is shifting prescriptions from near to farsighted and back again in moments. It will be done by Liquid lenses and via flexible liquid lenses and piezoelectric pistons. The invention proposes an AI-based technique that is used to give inputs to the piezoelectric pistons and get the proper visionary for eye defect people. The invention maybe updated with automated AI-controlled flexible lenses for more convenient usage.

No. of Pages : 13 No. of Claims : 5

(12) PATENT APPLICATION PUBLICATION
(21) Application No.202141029389 A
(19) INDIA
(22) Date of filing of Application :30/06/2021
(43) Publication Date : 16/07/2021

(54) Title of the invention : SYSTEM AND METHOD FOR EFFICIENTLY REMOVING INCONSISTENCIES FROM CAPTURED MEDIA CONSUMPTION DATA

(51) International classification	:G06F0016783000, H04N0019140000, H04L0029060000, G06F0016480000, H04N0021478800
(31) Priority Document No	:NA
(32) Priority Date	:NA
(33) Name of priority country	:NA
(86) International Application No	:NA
Filing Date	:NA
(87) International Publication No	: NA
(61) Patent of Addition to Application Number	:NA
Filing Date	:NA
(62) Divisional to Application Number	:NA
Filing Date	:NA

(71)**Name of Applicant :**
1)Red Brick Lane Marketing Solutions Private Limited
Address of Applicant :6th Floor, Salarpuria Sattva Magnificia, Next to Tin Factory, Old Madras Road, Bengaluru-560016, Karnataka, India Karnataka India

(72)**Name of Inventor :**
1)Sajo Mathews
2)Rishabh Sanklecha
3)Agam Jain
4)Siddharth Shankar Agarwal

(57) Abstract :
As uploaded herein

No. of Pages : 102 No. of Claims : 91

(12) PATENT APPLICATION PUBLICATION
(21) Application No.202141029419 A
(19) INDIA
(22) Date of filing of Application :30/06/2021
(43) Publication Date : 16/07/2021

(54) Title of the invention : A CONTENT PROTECTION FRAMEWORK FOR IMAGES IN CLOUD COMPUTING

(51) International classification	:G06K0009460000, G06F0016583000, G06K0009620000, G06Q0050180000, G06K0009000000
(31) Priority Document No	:NA
(32) Priority Date	:NA
(33) Name of priority country	:NA
(86) International Application No	:NA
Filing Date	:NA
(87) International Publication No	: NA
(61) Patent of Addition to Application Number	:NA
Filing Date	:NA
(62) Divisional to Application Number	:NA
Filing Date	:NA

(71)**Name of Applicant :**
1)Dr. K. Bhargavi
Address of Applicant :Associate Professor, Department of Computer Science and Engineering, PVKK Institute Of Technology, Anantapur -515001. Andhra Pradesh India
2)Dr V.Goutham
3)Yadaiah Balagoni
4)Tumuluri Subramanya Srinivas
5)Dr. Karanam Ramesh Rao
(72)**Name of Inventor :**
1)Dr. K. Bhargavi
2)Dr V.Goutham
3)Yadaiah Balagoni
4)Tumuluri Subramanya Srinivas
5)Dr. Karanam Ramesh Rao

(57) Abstract :
The current invention is meant for developing a framework to protect multimedia content (images) of data owners in cloud in such a way that it does not allow pirated copies. In other words, the invention identifies any sort of copyright violations effectively. It has two important modules. The first module is for extracting feature sets from the reference images (saved to cloud as intellectual property) to save both an image and feature set to cloud. It takes given input images, extracting SIFT, SURF and daisy wheel features, combine features, perform hashing and save the original image (reference) and feature set (signature) to public cloud. The second module on the other hand is meant for continuously detecting copyright violations. It takes query image as input, generates combined feature set for given image and then the feature set is matched with the available feature sets in cloud. Thus it can report any copyright violations. The current invention is beneficial to many stakeholders such as multimedia content (images) owners or data owners, cloud service providers, researchers and academia. It also paves way for further research to enhance the framework to protect complete set of multimedia objects including videos and audio files.

No. of Pages : 15 No. of Claims : 7

(12) PATENT APPLICATION PUBLICATION
(21) Application No.202141029422 A
(19) INDIA
(22) Date of filing of Application :30/06/2021
(43) Publication Date : 16/07/2021

(54) Title of the invention : AN ARCHITECTURE FOR APPROXIMATE COMPUTING FOR BIG DATA ANALYTICS IN CLOUD COMPUTING INFRASTRUCTURE

(51) International classification	:G06F0009500000, G06Q0010060000, G06F0017180000, H04W0088080000, G06F0017100000	
(31) Priority Document No	:NA	
(32) Priority Date	:NA	
(33) Name of priority country	:NA	
(86) International Application No	:NA	
Filing Date	:NA	
(87) International Publication No	: NA	
(61) Patent of Addition to Application Number	:NA	
Filing Date	:NA	
(62) Divisional to Application Number	:NA	
Filing Date	:NA	

(71)**Name of Applicant :**
1)Dr. RAJARAM JATOTHU
Address of Applicant :Professor, Department of CSE, Teegala Krishna Reddy Emgineering College, Hyderabad, Telangana, India. Telangana India
2)PENCHALAIAH KAVETI
3)Dr. Mohammed Abdul Wajeed
4)THATIKONDA SOMASHEKER
5)U. CHAITANYA
(72)**Name of Inventor :**
1)Dr. RAJARAM JATOTHU
2)PENCHALAIAH KAVETI
3)Dr. Mohammed Abdul Wajeed
4)THATIKONDA SOMASHEKER
5)U. CHAITANYA

(57) Abstract :
The current invention is meant for providing an architecture for approximate computing that is used in big data analytics in cloud infrastructure. It has provision for supporting big data analytics in cloud infrastructure with the usage of approximate computing. The rationale behind the architecture is that it leverages performance in terms of resource optimization in utilization and time taken for processing as well. It takes the application in hand, dataset and the possible quality functions. Based on the quality function, the decisions are made in order to reach the quality without having the need for complete processing or accurate computing. Analysis, identification and mapping are three important modules involved in the proposed system. They do perform analysis of the given inputs, identification of approximate computing opportunities and mapping the tasks to corresponding apprxomators respectively. There is seamless integration of components that maximize approximate computing opportunities. The usage of exact computing with CPU is made when there is no approximate computing possibility. The current invention is beneficial to many stakeholders. They include enterprise application owners, cloud service providers, data analytics community, researchers and academia.

No. of Pages : 16 No. of Claims : 7

(12) PATENT APPLICATION PUBLICATION
(21) Application No.202141029442 A
(19) INDIA
(22) Date of filing of Application :30/06/2021
(43) Publication Date : 16/07/2021

(54) Title of the invention : LINEAR DATA TRANSFER ARCHITECTURE IN INTERNET TECHNOLOGIES

(51) International classification	:H04L0029060000, H04N0021610000, H04L0029080000, H04N0021478200, H04L0029120000	(71)**Name of Applicant :** **1)S.RAVISANKAR** Address of Applicant :294, FOURTH CROSS STREET, PALANI ANDAVAR NAGAR, PALANI - 624601 DINDIGUL DISTRICT, TAMILNADU STATE, INDIA. Tamil Nadu India
(31) Priority Document No	:NA	(72)**Name of Inventor :**
(32) Priority Date	:NA	**1)S.RAVISANKAR**
(33) Name of priority country	:NA	
(86) International Application No	:NA	
Filing Date	:NA	
(87) International Publication No	: NA	
(61) Patent of Addition to Application Number	:NA	
Filing Date	:NA	
(62) Divisional to Application Number	:NA	
Filing Date	:NA	

(57) Abstract :
Linear data transfer architecture in Internet technologies, is specified based on the source file, hyperlinks, URLs, and the access protocol. The invention relates to the technical problems of the data transfer for Internet and mobile systems using hyperlinks and in Internet technology. The principal use(s) of this invention are, 1. Reduction of costs; 2. Protection against loss of data; 3. Improved performance. The reference numerals of drawings are Internet client(s) 1 to n (101); Short-cut or Copy of the Internet browser(s) 1 to n with source file(s) (102); Source (local) Internet server(s) (103); Target (global) Internet server(s) (104); Internet or Intranet content display in a new Internet browser window (105); Data transfer (106); Internet (107). The solution to the technical problem through the invention is explained in the detailed description and illustrated with the accompanying drawings.

No. of Pages : 16 No. of Claims : 15

(12) PATENT APPLICATION PUBLICATION
(21) Application No.202141029471 A
(19) INDIA
(22) Date of filing of Application :30/06/2021
(43) Publication Date : 16/07/2021

(54) Title of the invention : SOAP WATER FILTER SYSTEM WITH ADVANCED COMPACT VESSEL

(51) International classification	:C02F0001520000, C02F0001000000, C02F0001280000, C02F0001500000, C02F0001760000
(31) Priority Document No	:NA
(32) Priority Date	:NA
(33) Name of priority country	:NA
(86) International Application No	:NA
Filing Date	:NA
(87) International Publication No	: NA
(61) Patent of Addition to Application Number	:NA
Filing Date	:NA
(62) Divisional to Application Number	:NA
Filing Date	:NA

(71)**Name of Applicant :**
1)SHAHROOQUE SHAHJAHAN
Address of Applicant :Dr. A P J ABDUL KALAM BLOCK, NGI, NewGen IEDC, NEHRU GARDENS, THIRUMALAYAMPALAYAM, COIMBATORE Tamil Nadu India
2)MIDHUN HEADLY LAWRANCE
3)RAJKUMAR G
(72)**Name of Inventor :**
1)SHAHROOQUE SHAHJAHAN
2)RAJKUMAR G
3)MIDHUN HEADLY LAWRANCE

(57) Abstract :
Soap Water Filtration System (SOWAFIS) affords particular manner of filtration techniques with clustering up of cutting-edge and conventional filtration techniques in an inexpensive low price with clean implementation. We are concentrating at the device, which incorporates positive wide variety of techniques which have low power in each element that could be executed with inside the device. The filtration strategies assist to recycle the soapy waste water by putting off the contaminating factors and gain water with enough high-satisfactory for use to scrub the utensils, to reuse the swimming pool water and additionally for the irrigation purpose. It additionally allows the opportunity to make potable water from soapy water, in order that may be used for intake. It works at the precept of coagulation, flocculation and filtration method with infusing the activated carbon and diatomaceous earth cloth which allows to take in the soapy content material and fats substances from the waste water. In innovation terms, the performance in filtration strategies are enhanced. SOWAFIS is introducing the brand new method layout that lessens the gap intake associated with the filtration plant levels. It makes use of much less power intake that each filtration device which encompass those techniques that stated earlier. Recycling and remedy of the soapy water will boom the water high-satisfactory with inside the water and land areas. The upkeep and operational price were reduced. The utilization of bio cloth within side the filters will lower the abundance of chemical sellers within side the remedy of soapy water. The online tracking device has been introduced, to make certain the filtration device is running well and successfully in respective times.

No. of Pages : 15 No. of Claims : 6

(12) PATENT APPLICATION PUBLICATION
(21) Application No.202141029521 A
(19) INDIA
(22) Date of filing of Application :30/06/2021
(43) Publication Date : 16/07/2021

(54) Title of the invention : A novel method for Proximal detecting invertebrate pests on crops using a deep residual convolutional neural network trained by virtual images

(51) International classification	:G06N0003040000, G06N0003080000, A01M0001100000, A01M0001020000, G06Q0050020000
(31) Priority Document No	:NA
(32) Priority Date	:NA
(33) Name of priority country	:NA
(86) International Application No	:PCT//
Filing Date	:01/01/1900
(87) International Publication No	: NA
(61) Patent of Addition to Application Number	:NA
Filing Date	:NA
(62) Divisional to Application Number	:NA
Filing Date	:NA

(71)**Name of Applicant :**
1)Dr.D.Rajasekhar
Address of Applicant :Associate Professor, Department of ECE, G.Pulla Reddy Engineering College, Kurnool, Andhra Pradesh Andhra Pradesh India
2)Er.BINDUSWETHA PASULURI
3)Dr. Daniel C
4)Dr T.TIRUPAL
5)S FOWZIA SULTANA
6)Mahesh Enumula
(72)**Name of Inventor :**
1)Dr.D.Rajasekhar
2)Er.BINDUSWETHA PASULURI
3)Dr. Daniel C
4)Dr T.TIRUPAL
5)S FOWZIA SULTANA
6)Mahesh Enumula

(57) Abstract :
Detecting invertebrate pests on crops at early stages is essential for pest management. Traditionally, traps were used to sample pests and then human experts undertook classification and counting to estimate the levels of infestation, which is subjective, error-prone and labour intensive. Recently, semi-automatic pest detection is possible by using computer vision technologies to classify and count pest samples in laboratories or insect traps, however, the decision made by the laboratory-based or trap-based approaches are still too late for more optimized pest management decisions. Today, precision agriculture needs detection of pests on crops so that real-time actions can be taken or optimized decision can be made based on accurate information of time and location pest occurs. In this study, we used computer vision and machine learning technologies to detect invertebrates on crops in the field. We first evaluated the performances of the state-of-art convolutional neural networks (CNNs) and proposed a standard training pipeline. Facing the challenge of rapidly developing comprehensive training data, we used a novel method to generate a virtual database which was successfully used to train a deep residual CNN with an accuracy of 97.8% in detecting four species of pests in farming environments. The proposed method can be applied to a robotic system for proximal detection of invertebrate pests on crops in real-time.

No. of Pages : 20 No. of Claims : 4

(12) PATENT APPLICATION PUBLICATION
(21) Application No.202141029522 A
(19) INDIA
(22) Date of filing of Application :30/06/2021
(43) Publication Date : 16/07/2021

(54) Title of the invention : A Blockchain enhanced Intelligent Secure Surveillance System using Deep Learning Techniques

(51) International classification	:H04L0009320000, H04L0009060000, G06F0016220000, G08B0013196000, G06Q0020380000
(31) Priority Document No	:NA
(32) Priority Date	:NA
(33) Name of priority country	:NA
(86) International Application No	:PCT//
Filing Date	:01/01/1900
(87) International Publication No	: NA
(61) Patent of Addition to Application Number	:NA
Filing Date	:NA
(62) Divisional to Application Number	:NA
Filing Date	:NA

(71)**Name of Applicant :**
1)Dr. Kondapalli Venakata Ramana
Address of Applicant :Dr. Kondapalli Venakata Ramana, Assistant Professor, Department of Computer Science and Systems Engineering, Andhra University College of Engineering(A), Andhra University, Visakhapatnam 530003, Andhra Pradesh Andhra Pradesh India
2)D. Soujanya
(72)**Name of Inventor :**
1)Dr. Kondapalli Venakata Ramana
2)D. Soujanya

(57) Abstract :
The present invention A Blockchain enhanced Intelligent Secure Surveillance System using Deep Learning Techniques • service for allowing relates to the creation of the increase of security concerns all over the world, there is an enormous amount of surveillance data that is being produced by various security devices. This enormous information being populated day by day makes it a monotonous task for the organization to store as well as to process it. Here distributed environment has a vibrant impact on storing and analyzing the data. But sharing of information between various devices raises concerns about the security of the information being shared as any foe can intervene and may mislead the surveillance system by either apprehending or meddling the information. Thereby we propose a secure blockchain-based model for making the information unassailable. Here we save the files in a distributed ledger technology called IPFS InterPlanetary File System. IPFS uses encryption for storing data in the form of a Merkle tree. Our proposed model includes various strategy and conservation mechanisms, certificate ascendancies, authentication, and overturning of certificates to access the stored data, by using various smart contracts. The benefit of this proposed technology could help restore the ability to Our Proposed model includes various policy and maintenance mechanisms, corticated authorities, authentication, and revocation of corticated to the data in IPFS with the help of smart contracts.

No. of Pages : 25 No. of Claims : 6

(12) PATENT APPLICATION PUBLICATION
(21) Application No.202141029536 A
(19) INDIA
(22) Date of filing of Application :01/07/2021
(43) Publication Date : 16/07/2021

(54) Title of the invention : A SMART AND PAINLESS INTRAVENOUS CANNULATION ASSISTING DEVICE

(51) International classification	:A61M0025060000, G06T0007136000, A61C0019000000, G05B0019040000, A61D0007000000	(71)**Name of Applicant :** **1)Ms. VISHALINI N C** Address of Applicant :DELHI SCHOOL OF EXCELLENCE, ATTAPUR, HYDERABAD, TELANGANA, INDIA. Telangana India
(31) Priority Document No	:NA	**2)Dr. M NARESH KUMAR**
(32) Priority Date	:NA	**3)Dr. R CHITRA KALA**
(33) Name of priority country	:NA	**4)Dr. THOLKAPPIA ARASU G**
(86) International Application No	:NA	(72)**Name of Inventor :**
Filing Date	:NA	**1)Ms. VISHALINI N C**
(87) International Publication No	: NA	**2)Dr. M NARESH KUMAR**
(61) Patent of Addition to Application Number	:NA	**3)Dr. R CHITRA KALA**
Filing Date	:NA	**4)Dr. THOLKAPPIA ARASU G**
(62) Divisional to Application Number	:NA	
Filing Date	:NA	

(57) Abstract :
A smart Intravenous (IV) cannulation assisting device (100), comprising any shape in size of all the sides of smart IV cannula device is designed by multiple different layers (102), for protect the device from damage, and final outer layer of device is coated with radium material to identify the device or patient in emergency and it also helps at night if there is no power in particular ward. An anesthesia storage container (110) to store a pre-defined quantity of an anesthetic drug; an image scanner (118) to scan vein images of a pre-defined region; a processor (124) connected to the image scanner (118), wherein the processor (124) is configured to: receive the scanned vein images from the image scanner (118); process the scanned vein images to detect a first set of vein marks and a second set of vein marks from the vein images; display the first set of vein marks and the second set of vein marks on a display screen (120) to enable a user to select a vein to be pricked from the first set of vein marks; and enable a needle (116) of an Intravenous (IV) cannula (114) to eject from the smart IV cannulation assisting device (100) to prick the selected vein. The proposed invention also includes a sensor and buzz module to alert the concerned person regarding the fluid levels in the IV bottles and thus reducing the stress on care taker, avoids the reverse flow of blood by automatic clamp unit until the new bottle is changed, and GSM, Wi-Fi and GPS locate and send the information to help the doctors, staffs and care takers of patients to find wards and patient in emergency. A Battery for energy source for IV cannula smart device wherein the battery is the replaceable and rechargeable by wired cable or wireless or Wi-Fi.

No. of Pages : 30 No. of Claims : 10

(12) PATENT APPLICATION PUBLICATION
(21) Application No.202141029562 A
(19) INDIA
(22) Date of filing of Application :01/07/2021
(43) Publication Date : 16/07/2021

(54) Title of the invention : BRICK EMBEDDED KHUS ROOT AROMA AIR COOLER

(51) International classification	:F24F0005000000, B01D0053850000, F24F0003000000, C23C0004080000, B01D0053340000	(71)**Name of Applicant :** **1)Dr B. R. Ramesh Bapu** Address of Applicant :Chennai Institute of Technology, Parthasarathy Nagar, Kundrathur, Chennai, Tamilnadu, India 600069. Tamil Nadu India
(31) Priority Document No	:NA	**2)Mr. P. Muthuraman**
(32) Priority Date	:NA	**3)Dr P. Partheeban**
(33) Name of priority country	:NA	**4)Dr. J. Vishnupriyan**
(86) International Application No	:NA	**5)Dr. A. Dhanasekaran**
Filing Date	:NA	(72)**Name of Inventor :**
(87) International Publication No	: NA	**1)Dr B. R. Ramesh Bapu**
(61) Patent of Addition to Application Number	:NA	**2)Mr. P. Muthuraman**
Filing Date	:NA	**3)Dr P. Partheeban**
(62) Divisional to Application Number	:NA	**4)Dr. J. Vishnupriyan**
Filing Date	:NA	**5)Dr. A. Dhanasekaran**

(57) Abstract :
ABSTRACTBrick Embedded Khus Root Aroma Air Cooler" The air conditioning system becomes a basic requirement of the people being used in all the residential buildings and business establishments. But the major drawbacks in the conventional air conditioners are: Initial investment is high Running cost is high Require frequent maintenance Environmental hazardous gases are used as working fluid. In most of the air conditioners, it will remove the water content and same air is re-circulated inside the A/C rooms. But the proposed design is a low cost one, and not requires closed room to maintain the ambient temperature. As the system cools the surrounding by evaporating the water particles, oxygen enriched nature friendly air made available for the consumers. Further the major advantages of the system are, low cost, easy to maintain, low power consumption, portable, and water leakage free one.

No. of Pages : 6 No. of Claims : 7

(12) PATENT APPLICATION PUBLICATION
(19) INDIA
(22) Date of filing of Application :01/07/2021
(21) Application No.202141029564 A
(43) Publication Date : 16/07/2021

(54) Title of the invention : SMART PIPE INSPECTION ROBOT FOR BLOCKAGE DETECTION AND CLEARANCE

(51) International classification	:G06Q0010100000, E03F0007000000, E03F0003060000, B08B0009032000, E03F0009000000	(71)**Name of Applicant :** **1)Dr.R.M.Bommi** Address of Applicant :Chennai Institute of Technology, Sarathy Nagar, Kundrathur, Chennai, Tamilnadu, India 600069. Tamil Nadu India
(31) Priority Document No	:NA	(72)**Name of Inventor :**
(32) Priority Date	:NA	**1)Dr.R.M.Bommi**
(33) Name of priority country	:NA	**2)Dr. P. Partheeban**
(86) International Application No	:NA	**3)Mrs. Jacintha.V**
Filing Date	:NA	**4)Dr.T.M.Amirthalakshmi**
(87) International Publication No	: NA	**5)Mr.V.Sudharsanam**
(61) Patent of Addition to Application Number	:NA	**6)Dr.R.Meenakshi**
Filing Date	:NA	
(62) Divisional to Application Number	:NA	
Filing Date	:NA	

(57) Abstract :
ABSTRACT In India, there are several major problems happening, therein problems sewage maintenance is one in all massive issue in Republic of India. Due to the poor maintenance, the sewerage water is overflowed on the streets and generally mixes with drinking water and becomes harmful to the people at large. In 2013, manual scavenging was declared illegal, but still private contractors engaged by the municipal government endure to hire manual scavengers. More than hundreds of fatality of the manual scavengers has been reported each year. In order to overcome this deplorable situation, artificial intelligence is deployed to replace manpower. The sewage pipe cleaning and inspection is carried out by a mechanical robot driven by electronic automation. If the avoidance pipe was blocked, the sewerage water will be blocked till it is discerned and repaired. To overcome this issue., smart pipe inspection robot for blockage detection and clearance model is planned .This model is meant to exchange human sewerage cleaners so as to confirm their health and hygiene. The planned mechanism moves through the pipeline, detects the blockage and clears them by pumping water with air mass or cuts through the blockage and moves forward. The mechanism operation is monitored and controlled manually by the sewerage employee, employing a portable computer or palmtop computer. The operator will monitor the insides of the pipe via a wireless camera hooked up to the mechanism. The assorted sensors hooked up to the mechanism helps to work out the gap of the block from the mechanism and also the presence of toxic gases within the pipeiine. The pumping mechanism pumps water or air into the pipeline with air mass so as to loosen and clear the block.

No. of Pages : 6 No. of Claims : 5

(12) PATENT APPLICATION PUBLICATION
(21) Application No.202141029581 A
(19) INDIA
(22) Date of filing of Application :01/07/2021
(43) Publication Date : 16/07/2021

(54) Title of the invention : A METHOD FOR REAL-TIME PREDICTION OF POWDER QUANTITY IN ADDITIVE MANUFACTURING

(51) International classification	:B22F0003105000, B33Y0010000000, B33Y0030000000, B29C0064153000, G06Q0010060000
(31) Priority Document No	:NA
(32) Priority Date	:NA
(33) Name of priority country	:NA
(86) International Application No	:NA
Filing Date	:NA
(87) International Publication No	: NA
(61) Patent of Addition to Application Number	:NA
Filing Date	:NA
(62) Divisional to Application Number	:NA
Filing Date	:NA

(71)**Name of Applicant :**
1)Amace Solutions Pvt. Ltd.
Address of Applicant :Plot No: 467 to 469, 4th Phase, 12th Cross, Peenya Industrial Area, Bengaluru 560 058 Karnataka, India Karnataka India
(72)**Name of Inventor :**
1)Guruprasad AR
2)Vishwas R Puttige
3)Dhinesh Kumar K.S.
4)Shreyans Khot
5)Prarun T.G.

(57) Abstract :
ABSTRACT A METHOD FOR REAL-TIME PREDICTION OF POWDER QUANTITY IN ADDITIVE MANUFACTURING The present disclosure provides a method for real-time prediction of powder quantity in additive manufacturing comprising the steps of, measuring (301) real-time weight of powder in a hopper, by a powder estimation module, determining (302) real-time volume of build remaining for manufacturing, by a volume estimation module, transmitting (303) the measured real-time weight, the determined real-time volume to a powder prediction module, by the powder estimation module and the volume estimation module, transmitting (304) parameters influencing quantity of the powder to the powder prediction module, by the apparatus and predicting (305) real-time quantity of powder required for manufacturing based on the measured real-time weight, the determined real-time volume and the parameters, by the powder prediction module. Fig. 3

No. of Pages : 21 No. of Claims : 7

(12) PATENT APPLICATION PUBLICATION
(19) INDIA
(22) Date of filing of Application :01/07/2021
(21) Application No.202141029586 A
(43) Publication Date : 16/07/2021

(54) Title of the invention : DYNAMIC REAL TIME PROTOCOL FOR MEDIA STREAMING IN IOT DEVICES

(51) International classification	:H04L0029060000, H04L0029080000, G06F0016950000, G06F0016360000, H04M0003000000
(31) Priority Document No	:NA
(32) Priority Date	:NA
(33) Name of priority country	:NA
(86) International Application No	:NA
Filing Date	:NA
(87) International Publication No	: NA
(61) Patent of Addition to Application Number	:NA
Filing Date	:NA
(62) Divisional to Application Number	:NA
Filing Date	:NA

(71)**Name of Applicant :**
1)Mrs. C.Geetha
Address of Applicant :Assistant Professor, CSE Department, No 173, Bharath Institute of higher education and research, Selaiyur, Chennai- 600073, Tamilnadu. Tamil Nadu India
2)Dr. S. Narayanan
3)Dr. Vinodkumar Jacob
4)Dr. Manoj Kumar Gupta
5)Dr. Rakesh Kumar Arora
6)Mr. Shanavas T N
7)Mrs. R.S.Kavitha
(72)**Name of Inventor :**
1)Mrs. C.Geetha
2)Dr. S. Narayanan
3)Dr. Vinodkumar Jacob
4)Dr. Manoj Kumar Gupta
5)Dr. Rakesh Kumar Arora
6)Mr. Shanavas T N
7)Mrs. R.S.Kavitha

(57) Abstract :
The Internet of Things (IoT) has notably inspired the involvement of internet research teams all over the universe. Because of the diversification of sensor node, multimedia transmitter via IoT poses a significant obstacle. The constraints of Iot applications, that included inefficiencies, interdependent situations, increased rates of information explosion, higher volume of interactions, no human interference, flexible interchange of thing locations, and power prohibition of several Sensor nodes, are one of the key difficulties in the upgrade of multimedia standards. Multimedia routing protocols are critical to meeting the requirements of Iot networks, there seems to be an urgent necessity enhance conventional real communication protocols. RTP and RTCP are two multimedia protocols that should be enriched to be appropriate for IoT environments. The fundamental step of suggested adaptive variants' is to split highly optimized sessions into simple sessions that are conscious of channel quality. Additional sectors are incorporated to the RTP and RTCP headers to accomplish this goal. Within certain scenarios, these areas operate to reduce connectivity overwhelm. Ultimately, a computation framework is built that used the network simulation package to evaluate the effectiveness of the suggested IoT-RTP and IoT-RTCP. End-to-end latency, disruption attenuation, network lifetime, quantity of RRs, efficiency, and energy usage are the specific criteria that are evaluated. The findings show that the recommended IoT-RTP/RTCP improves the performance the conventional RTP and RTCP variations.

No. of Pages : 16 No. of Claims : 8

(12) PATENT APPLICATION PUBLICATION
(19) INDIA
(22) Date of filing of Application :01/07/2021
(21) Application No.202141029669 A
(43) Publication Date : 16/07/2021

(54) Title of the invention : A SYSTEM FOR ROBUST STEGANOGRAPHIC APPROACH EMBEDDING THE DATA

(51) International classification	:H04L0029060000, G06F0021620000, H04N0001320000, H04L0009060000, G06T0001000000
(31) Priority Document No	:NA
(32) Priority Date	:NA
(33) Name of priority country	:NA
(86) International Application No	:NA
Filing Date	:NA
(87) International Publication No	: NA
(61) Patent of Addition to Application Number	:NA
Filing Date	:NA
(62) Divisional to Application Number	:NA
Filing Date	:NA

(71)**Name of Applicant :**
1)Sharath M N
Address of Applicant :Designation: Research scholar Department: Computer science and engineering Institution address: Dayananda Sagar University, Bengaluru Email id: sharathmn.res-soe-cse@dsu.edu.in Mobile No: 9108719643 Karnataka India
2)Dr.Rajesh T M
3)Dr.Mallanagouda Patil
4)Dr.Shaila S G
5)Dr.Piyush Kumar Pareek
(72)**Name of Inventor :**
1)Sharath M N
2)Dr.Rajesh T M
3)Dr.Mallanagouda Patil
4)Dr.Shaila S G
5)Dr.Piyush Kumar Pareek

(57) Abstract :
The art of video steganography is a promising tool in the science of secret 250 communication by hiding the information in the cover video without any detectable changes in the cover file. The dynamic nature of the video format makes it immune to cyber-attacks which in turn helps in secret communication. As the attention to video file sharing is rapidly growing, it is vital to have enhanced and novel steganographic techniques. New approaches have been suggested to cover the hidden message in a 255 video file with the proposed technique in this Invention. The confidential data is disguised by shielding them in the 7th bit of the identified pixel and the following pixel. Whereas the pixel in which the secret data should be shielded is picked using a knight tour algorithm that applies an added security to the secret message from cyber trespassers. The competence of this novel algorithm is proved by enumerating various 260 parameters such as PSNR, MSE, SSIM, and embedded capacity.

No. of Pages : 15 No. of Claims : 1

(12) PATENT APPLICATION PUBLICATION
(19) INDIA
(22) Date of filing of Application :01/07/2021

(21) Application No.202141029672 A
(43) Publication Date : 16/07/2021

(54) Title of the invention : UTILIZATION OF SOLAR SYSTEM USING IOT OR INDUSTRIAL APPLICATION 4.0

(51) International classification	:G08B0021180000, G07C0003000000, G01N0021330000, A61B0005000000, G01M0099000000
(31) Priority Document No	:NA
(32) Priority Date	:NA
(33) Name of priority country	:NA
(86) International Application No	:NA
Filing Date	:NA
(87) International Publication No	: NA
(61) Patent of Addition to Application Number	:NA
Filing Date	:NA
(62) Divisional to Application Number	:NA
Filing Date	:NA

(71)**Name of Applicant :**
1)Prof. Karthik S
Address of Applicant :Assistant Professor, School of Mechanical Engineering, REVA University, Bangalore 560064, Karnataka. Karnataka India
2)Prof. Balaji Y.S.
3)Prof. Venkatesha B.K.
4)Dr. ArunBiradar
5)Prof. Manjunath K
6)Prof. Suprith P.G.
7)Dr. Panchakshari H. V.
8)Dr. MallikarjunBiradar
9)Dr. Raju B.S.
10)Dr. Shadakshari R.
11)Dr.Girish H
12)Dr Manjunatha L H
13)Mr.K Murali
14)Dr. Pravin R. kshirsagar
(72)**Name of Inventor :**
1)Prof. Karthik S
2)Prof. Balaji Y.S.
3)Prof. Venkatesha B.K.
4)Dr. ArunBiradar
5)Prof. Manjunath K
6)Prof. Suprith P.G.
7)Dr. Panchakshari H. V.
8)Dr. MallikarjunBiradar
9)Dr. Raju B.S.
10)Dr. Shadakshari R.
11)Dr.Girish H
12)Dr Manjunatha L H
13)Mr.K Murali
14)Dr. Pravin R. kshirsagar

(57) Abstract :
The main aim of this innovation is to build a system for remote monitoring and control of key industrial parameters, such as gas measurement, speed, temperature, and diagnostic pressure, preventing human deaths, extending machinery life, automating range-based access. Protection and efficiency are the main considerations of the contemporary industry environment. This begins with efficient, reliable, and frequent monitoring. Such mechanisms were made manually in previous models, leading to mistakes and death losses. The proposed approach allows continuous monitoring and storing of critical parameters. This allows automatic choices depending on the parameters controlled In case of a threshold temperature exceeding that threshold, the cooling fan is decided to switch on automatically, the user is being sent an alert, and also in the case of a blast of fire or gas leakage, an automated alert and emergency notification will be sent to the fire rescue equipment, the owner, the responsible, etc.

No. of Pages : 11 No. of Claims : 7

(12) PATENT APPLICATION PUBLICATION
(21) Application No.202141029699 A
(19) INDIA
(22) Date of filing of Application :01/07/2021
(43) Publication Date : 16/07/2021

(54) Title of the invention : ARTIFICIAL INTELLIGENCE BASED SMART SOLAR TRACKING TECHNIQUE FOR UNINTERRUPTED POWERING SYSTEM

(51) International classification	:H02S0020320000, F24S0050200000, F24S0030000000, H02S0020300000, G01S0003786000
(31) Priority Document No	:NA
(32) Priority Date	:NA
(33) Name of priority country	:NA
(86) International Application No	:NA
Filing Date	:NA
(87) International Publication No	: NA
(61) Patent of Addition to Application Number	:NA
Filing Date	:NA
(62) Divisional to Application Number	:NA
Filing Date	:NA

(71)**Name of Applicant :**
1)Dr. Lijo Jacob Varghese,Christian College of Engineering and Technology
Address of Applicant :Professor, Electrical and Electronics Engineering, Christian College of Engineering and Technology - Oddanchatram Tamil Nadu India 624619 Tamil Nadu India
2)Dr.Dattathreya,Alva's institute of Engineering and Technology
3)Jagadish S.Jakati,VYI
4)Jayaprakash Venugopal,Sathyabama Institute of Science and Technology, (Deemed To Be University)
5)Dr. C. Srinivas Gupta,Mallareddy Engineering College
6)Archana Patil,RITW, Hyderabad
7)Dattatray Sadashiv Doifode,SVKM'S Institute of technology
8)Dr. M. Murali,KSRM College of Engineering
9)Dr. Sushma Jaiswal,Guru Ghasidas Vishwavidyalaya
10)Dr. Saroj Kumar,JAIN Deemed to be University
11)Deepak Gowda .L,ACS College Of Engineering
12)Dr.S.K. Manju bargavi,Jain (Deemed-to-be) University
(72)**Name of Inventor :**
1)Dr. Lijo Jacob Varghese,Christian College of Engineering and Technology
2)Dr.Dattathreya,Alva's institute of Engineering and Technology
3)Jagadish S.Jakati,VYI
4)Jayaprakash Venugopal,Sathyabama Institute of Science and Technology, (Deemed To Be University)
5)Dr. C. Srinivas Gupta,Mallareddy Engineering College
6)Archana Patil,RITW, Hyderabad
7)Dattatray Sadashiv Doifode,SVKM'S Institute of technology
8)Dr. M. Murali,KSRM College of Engineering
9)Dr. Sushma Jaiswal,Guru Ghasidas Vishwavidyalaya
10)Dr. Saroj Kumar,JAIN Deemed to be University
11)Deepak Gowda .L,ACS College Of Engineering
12)Dr.S.K. Manju bargavi,Jain (Deemed-to-be) University

(57) Abstract :
This invention focuses on Artificial Intelligence (AI) based solar tracking system to replace the utility power by renewable solar power to meet the increasing demand of energy. Optimal solar power can be generated only when the solar panels are exposed to direct sunlight. But any change in weather condition results in cloudiness in real time, in such case angle of the solar panel has to be turned towards the sunlight. This invention proposes a novel smart powering technique where the solar energy is tracked in an autonomous way for increasing the production of solar energy. The solar tracker fixed biaxially is equipped with two small solar modules additionally. First module is horizontally installed and the second module is installed biaxially in the solar tracker. Position of the solar panel is controlled by the AI algorithm which takes input from prior data on sun trajectory through the year and also on output current generated from the solar panels. When sun light reduces due to clouds, then the current from small solar horizontal module will be more that of module oriented to the sun. This system is able to generate 18% solar energy more than conventional system in the presence of clouds.

No. of Pages : 9 No. of Claims : 6

(12) PATENT APPLICATION PUBLICATION
(21) Application No.202141029707 A
(19) INDIA
(22) Date of filing of Application :02/07/2021
(43) Publication Date : 16/07/2021

(54) Title of the invention : GAZE BASED INTERFACE TO ASSIST PROSPECTIVE PROGRAMMERS WITH THE LEARNING ENVIRONMENT

(51) International classification	:G06F0003010000, A61B0003113000, G06K0009000000, G06K0009480000, G06K0009380000	(71)**Name of Applicant :** **1)Dr. Sheela S V** Address of Applicant :Designation: Professor Department: Information Science and Engineering Institution: BMS College of Engineering, Basavangudi, Bangalore-560019 email: sheelasv@hotmail.com Mob: 9845308630 Karnataka India **2)Abhinand P**
(31) Priority Document No	:NA	
(32) Priority Date	:NA	
(33) Name of priority country	:NA	
(86) International Application No	:NA	
Filing Date	:NA	
(87) International Publication No	: NA	
(61) Patent of Addition to Application Number	:NA	
Filing Date	:NA	
(62) Divisional to Application Number	:NA	
Filing Date	:NA	
		(72)**Name of Inventor :** **1)Dr. Sheela S V** **2)Abhinand P**

(57) Abstract :
Gaze based interfaces improve cognitive modeling that expresses selection and learning options. Identification of eye movements help to track user™s intention. The Invention 335 determines eye gaze using images captured in natural light under unconstrained environment. The CNN learns a pixel-based mapping without considering region selections. Each layer in the network extracts class-salient features from previous layers. The network successfully captures spatial and temporal dependencies through relevant filters. A simple and robust approach is adopted to segment the iris without pre-processing 340 using semantic information. The segmentation results are applied to determine eye gaze position for selection of C language construct. An outline of the constructs with basic functionalities will be useful for potential programmers. A handle to word document gives Page 18 of 18 an option to the user for modifications during learning. The interface is an attempt to suffice programmers with motor disabilities.

No. of Pages : 21 No. of Claims : 1

(12) PATENT APPLICATION PUBLICATION
(21) Application No.202141029709 A
(19) INDIA
(22) Date of filing of Application :02/07/2021
(43) Publication Date : 16/07/2021

(54) Title of the invention : DEVELOPMENT OF ARTIFICIAL ANGULAR AGGREGATE USING INDUSTRIAL WASTE

(51) International classification	:C04B0028000000, C04B0012000000, C04B0028260000, G01N0033380000, C04B0018080000
(31) Priority Document No	:NA
(32) Priority Date	:NA
(33) Name of priority country	:NA
(86) International Application No	:NA
Filing Date	:NA
(87) International Publication No	: NA
(61) Patent of Addition to Application Number	:NA
Filing Date	:NA
(62) Divisional to Application Number	:NA
Filing Date	:NA

(71)**Name of Applicant :**
1)Sindhoora.C
Address of Applicant :203,SS Vrudhi apartment VISL Layout Bangalore Karnataka India 560109 Karnataka India
(72)**Name of Inventor :**
1)Sindhoora.C
2)Arpitha Gowda .S.L
3)Adhinandhan K.S

(57) Abstract :
With increase in demand of natural resources like coarse aggregates used in Construction, usage of artificial aggregates in construction is being studied for replacement of natural Aggregates in production of concrete. Increasing attention in recent years of converting fly ash into a value added product like aggregates offer greater potential for its high volume utilization, thereby reducing use of depleting natural aggregates. Artificial aggregates called Geopolymer aggregates was prepared by crushing mechanism to obtain different shapes of aggregates instead of rounded angular aggregates. Crushing process was carried out by hammering with the required fly ash to iron ore tailing ratio. Trial and error method was used to fix fly ash to iron ore tailing ratio. Totally Four different ratios were considered with fly ash to iron ore tailing ratios as 80:20 , 70:30 , 60:40 and 50:50. Each set of fly ash to iron ore tailing ratio was mixed with alkaline activator solution, the formed slurry is casted into cubes, later steam cured and compressive strength is determined. Binding materials such as Sodium hydroxide(NaoH) and Sodium silicate(Na2SiO3) were being considered in manufacture of coarse aggregates as an alternative to natural aggregates. Aggregate tests were conducted for the obtained geopolymer aggregates and compared with the natural aggregates. With the prepared coarse aggregates, concrete cubes were casted by varying the geopolymer aggregates to natural aggregates ratios as 100:0,70:30 ,60:40 and 50:50.Compressive strength of concrete was determined for these ratios. By taking the ratio for which maximum compressive strength was obtained, flexural strength and split tensile strength of concrete was determined

No. of Pages : 12 No. of Claims : 2

(12) PATENT APPLICATION PUBLICATION
(21) Application No.202141029710 A
(19) INDIA
(22) Date of filing of Application :02/07/2021
(43) Publication Date : 16/07/2021

(54) Title of the invention : EXPERIMENTAL STUDY ON GEOTECHNICAL PROPERTIES OF SOIL WITH INCORPORATION OF BIOPOLYMERS

(51) International classification	:G01N0003080000, E21B0049000000, G01N0033240000, C04B0033130000, C09K0017060000
(31) Priority Document No	:NA
(32) Priority Date	:NA
(33) Name of priority country	:NA
(86) International Application No	:NA
Filing Date	:NA
(87) International Publication No	: NA
(61) Patent of Addition to Application Number	:NA
Filing Date	:NA
(62) Divisional to Application Number	:NA
Filing Date	:NA

(71)**Name of Applicant :**
1)Sindhoora.C
Address of Applicant :203,SS Vrudhi apartment VISL Layout Bangalore Karnataka India 560109 Karnataka India
(72)**Name of Inventor :**
1)Sindhoora.C
2)Sanjith.J
3)Adhinandhan K.S

(57) Abstract :
Expansive soils are extensively distributed worldwide and are a source of great damage to infrastructure and building. In order to minimize the undesirable properties and make them suitable for construction purposes, many new approaches are now being developed to improve the strength of expansive soils. The main objective of the present study is focused on to analyze various index properties of black Cotton soils with 5% constant guar gum and different percentage of acecia nilotica. Samples were tested in two stages. In first stage the physical properties of soil such as specific gravity, grain size analysis, Atterburg™s limits and differential free swell index and Unconfined compression test (UCS) are conducted. In second stage on black cotton Soil with combination of acecia nilotica at 0.1%, 0.2%, 0.3%, 0.4% and 0.5% by maintain 5% guar gum constant in all the samples tests were conducted.

No. of Pages : 11 No. of Claims : 3

(12) PATENT APPLICATION PUBLICATION
(19) INDIA
(22) Date of filing of Application :02/07/2021
(21) Application No.202141029724 A
(43) Publication Date : 16/07/2021

(54) Title of the invention : ARTIFICIAL INTELLIGENCE IOT BASED RESPIRATION RATE, OXYGEN VOLUME AND SLEEP MONITORING WEARABLE DEVICE FOR COVID PATIENTS USING SENSORS

(51) International classification	:A61B0005000000, A61B0005080000, A61B0005113000, A61B0005087000, A61B0005020500
(31) Priority Document No	:NA
(32) Priority Date	:NA
(33) Name of priority country	:NA
(86) International Application No	:NA
Filing Date	:NA
(87) International Publication No	: NA
(61) Patent of Addition to Application Number	:NA
Filing Date	:NA
(62) Divisional to Application Number	:NA
Filing Date	:NA

(71)**Name of Applicant :**
1)Santosh M Nejakar
Address of Applicant :NEJAKAR TECHNOLOGIES, Haveri Siddadevanagar, Near Head Post Haveri Karnataka India 581110 Karnataka India
2)PRATHIK JAIN S
3)DR. SAVITHA S K
4)DR. ANITA PANKAJ PATIL
5)RAJASHEKHAR U
6)DR. J. P. SRIDHAR
(72)**Name of Inventor :**
1)Santosh M Nejakar
2)PRATHIK JAIN S
3)DR. SAVITHA S K
4)DR. ANITA PANKAJ PATIL
5)RAJASHEKHAR U
6)DR. J. P. SRIDHAR
7)DR. RAJASHEKARGOUDA C PATIL

(57) Abstract :
Current methods for continuous respiration monitoring such as respiratory inductive or optoelectronic plethysmography are limited to clinical or research settings; most wearable systems reported only measures respiration rate. Here we introduce a wearable sensor capable of simultaneously measuring both respiration rate , volume with high delity and sleep. Our disposable respiration sensor with a Band-Aid like formfactor can measure both respiration rate and volume by simply measuring the local strain of the ribcage and abdomen during breathing. We demonstrate that both metrics are highly correlated to measurements from a medical grade continuous spirometer on participants at rest. Additionally, we also show that the system is capable of detecting respiration under various ambulatory conditions. Because these low-powered piezo-resistive sensors can be integrated with wireless Bluetooth units, they can be useful in monitoring patients with chronic respiratory diseases in everyday settings.

No. of Pages : 4 No. of Claims : 5

(12) PATENT APPLICATION PUBLICATION
(19) INDIA
(22) Date of filing of Application :02/07/2021
(21) Application No.202141029725 A
(43) Publication Date : 16/07/2021

(54) Title of the invention : DEVELOPMENT OF AUTOMOTIVE MUFFLER BASED ON NON-NOBLE MATERIAL

(51) International classification	:G01N0021350400, B01J0023890000, B01D0053940000, C10L0001160000, F01N0003280000
(31) Priority Document No	:NA
(32) Priority Date	:NA
(33) Name of priority country	:NA
(86) International Application No	:PCT//
Filing Date	:01/01/1900
(87) International Publication No	: NA
(61) Patent of Addition to Application Number	:NA
Filing Date	:NA
(62) Divisional to Application Number	:NA
Filing Date	:NA

(71)**Name of Applicant :**
1)Mr. JAYAPRAKASHVENUGOPAL
Address of Applicant :ASSISTANT PROFESSOR,DEPARTMENT OF MECHATRONICS ENGINEERING,SATHYABAMA INSTITUTE OF SCIENCE AND TECHNOLOGY, (DEEMED TO BE UNIVERSITY), OMR, JEPPIAARNAGAR,CHENNAI. Tamil Nadu India
2)Dr.G.VENKATESAN
3)Mr. C. SAKTHIRAJAN
4)Mr. M. ARUNPRASATH
5)Mr. M. HARIHARAN
6)Dr.S.MURUGAPOOPATHI
7)Mr.MDSAAD PATEL
8)Mr.B. ANBARASAN
9)Mr. M. SIVANESHPRABHU
10)Dr.RAMSUBBIAH
11)Mr. A. JOSEPH AROCKIAM
12)Mr. G. B. SATHISHKUMAR
(72)**Name of Inventor :**
1)Mr. JAYAPRAKASHVENUGOPAL
2)Dr.G.VENKATESAN
3)Mr. C. SAKTHIRAJAN
4)Mr. M. ARUNPRASATH
5)Mr. M. HARIHARAN
6)Dr.S.MURUGAPOOPATHI
7)Mr.MDSAAD PATEL
8)Mr.B. ANBARASAN
9)Mr. M. SIVANESHPRABHU
10)Dr.RAMSUBBIAH
11)Mr. A. JOSEPH AROCKIAM
12)Mr. G. B. SATHISHKUMAR

(57) Abstract :
The present invention relates to the field of chemical engineering. In this present invention, the most effective technology to reduce emissions of Carbon Monoxide (CO) and Hydrocarbon (HC) is the application of the catalytic converter in the exhaust system of the motorcycle muffler. The commonly used catalysts are noble materials such as Palladium, Platinum, and Rhodium. In this study, Copper-Nickel (CuNi) and Copper (Cu) material have been selected as catalyst because it has high activity in the exhaust system, low-cost production, the availability is abundant, and operated at a lower temperature than the noble material. Measurements of exhaust emission would be carried out using a gas analyzer.

No. of Pages : 23 No. of Claims : 6

(12) PATENT APPLICATION PUBLICATION
(19) INDIA
(22) Date of filing of Application :02/07/2021
(21) Application No.202141029728 A
(43) Publication Date : 16/07/2021

(54) Title of the invention : AUTOMATIC FOOD FEEDING SYSTEM FOR ANIMALS

(51) International classification	:H04L0029080000, A01K0005020000, G05B0019042000, A01K0029000000, A01G0022000000
(31) Priority Document No	:NA
(32) Priority Date	:NA
(33) Name of priority country	:NA
(86) International Application No	:NA
Filing Date	:NA
(87) International Publication No	: NA
(61) Patent of Addition to Application Number	:NA
Filing Date	:NA
(62) Divisional to Application Number	:NA
Filing Date	:NA

(71)**Name of Applicant :**
1) Dr. M. SUDHA
Address of Applicant :PROFESSOR AND HEAD, DEPARTMENT OF ELECTRONICS AND COMMUNICATIONS ENGINEERING, PAAVAI ENGINEERING COLLEGE (AUTONOMOUS), NH-44, PAAVAI NAGAR, PAACHAL, NAMAKKAL - 637408, TAMIL NADU, INDIA. Tamil Nadu India
2)Dr. S. ELANGO
3)Mr. S. VIJAYAKUMAR
4)Mr. S. LOGANATHAN
5)Dr. S. SRIDEVI
6)R. SOWNDARYA
7)R. SOWMIATHARSHINI
8)S. SRILEKHA
9)S. MADHUMITHA
10)B. PARAMESWARI
11)B. MONIKA
12)R. NANDHAKUMAR
13)M. MUTHUSRINIVASAN
14)K. VIGNESH
(72)**Name of Inventor :**
1) Dr. M. SUDHA
2)Dr. S. ELANGO
3)Mr. S. VIJAYAKUMAR
4)Mr. S. LOGANATHAN
5)Dr. S. SRIDEVI
6)R. SOWNDARYA
7)R. SOWMIATHARSHINI
8)S. SRILEKHA
9)S. MADHUMITHA
10)B. PARAMESWARI
11)B. MONIKA
12)R. NANDHAKUMAR
13)M. MUTHUSRINIVASAN
14)K. VIGNESH

(57) Abstract :
The Present invention is designed to make an animal feeding system for all kinds of use; cattle raising, farms, horse stables and many more. The feeding process will be automatized using an industrial controller which controls the feeders and will have a.track of the food to settle up periods and quantities. This food feeding automation application could be applied remotely using a PIC micro controller and Wi-Fi, if necessary and the information can be accessed wherever you want,. through a VPN connected to our MQTT server. This database data will be shown in a web server (Thing speak) that will monitor all the information. The analysis of the information should help in a continuous improvement cycle. In addition to that water level indictor and cleaning system is proposed in this project. loT is one of the technologies that are used in a huge number of applications today. One of the applications (GSM) is tracking animal and keeps regular monitoring on them. This tracking system can inform you the location and route travelled by animal, and that information can be observed from any other remote location. It also includes the web application that provides you exact location of target. This system enables usto track target in any weather conditions.

No. of Pages : 10 No. of Claims : 6

(12) PATENT APPLICATION PUBLICATION
(19) INDIA
(22) Date of filing of Application :02/07/2021
(21) Application No.202141029729 A
(43) Publication Date : 16/07/2021

(54) Title of the invention : AN AUTOMATED DESIGN ENGINE FOR COMPLETE MECHANICAL DESIGN SOLUTION

(51) International classification	:G06F0030170000, G06F0030130000, G06F0111200000, B33Y0050000000, G06F0030000000
(31) Priority Document No	:NA
(32) Priority Date	:NA
(33) Name of priority country	:NA
(86) International Application No	:PCT//
Filing Date	:01/01/1900
(87) International Publication No	: NA
(61) Patent of Addition to Application Number	:NA
Filing Date	:NA
(62) Divisional to Application Number	:NA
Filing Date	:NA

(71)**Name of Applicant :**
1)Dr. Praveen Kumar Melahalli Vasantharaju
Address of Applicant :N0.182, 10th cross Health layout, Bangalore Karnataka India
2)Dr. Raviraj Mahadevappa Sunkapur
(72)**Name of Inventor :**
1)Dr. Praveen Kumar Melahalli Vasantharaju
2)Dr. Raviraj Mahadevappa Sunkapur
3)Dr. Muniraju Muniyellappa
4)Mr. Ashwin Narendra Babu
5)Mr. Anoop Narendra Babu
6)Mr. Fharukh Ahmed Ghasi Mehaboobali
7)Mrs. Bhuvaneshwari Alias Sunitha Kulkarni
8)Mr. Rudresh Bekkalale Madegowda
9)Dr. Lingaraju Kalakempanadoddi Ningegowda
10)Dr. Lokesh Thirtheshappa.
11)Dr. Lakshmidevamma Muniyappa Madarakallu
12)Dr. Seenappa

(57) Abstract :
The present invention relates to an automated design engine software which helps in complete solution for mechanical design solution. As engineers create new products, in the engineering design stage we need to go through a lot of papers that have been previously published on these subjects just to understand the design process and manually calculate safe design dimensions of the product. Even after going through all that still, to know whether the design is correct or not, it has to be reviewed by the experts of design domain. This process can become time consuming and is restricted to the knowledge of the people involved in this process. These problems can be eliminated by using a purpose-built software for designing mechanical components calledDESIGN ENGINE", which designs and also drafts instant 2D drawings of the individual components which can be used directly for manufacturing of the components.

No. of Pages : 7 No. of Claims : 4

(12) PATENT APPLICATION PUBLICATION
(21) Application No.202141029735 A
(19) INDIA
(22) Date of filing of Application :02/07/2021
(43) Publication Date : 16/07/2021

(54) Title of the invention : An efficient framework for interoperability of patient health records using Blockchain technology

(51) International classification	:G16H0010600000, G06Q0050220000, H04L0009320000, G16H0010650000, G06Q0010000000
(31) Priority Document No	:NA
(32) Priority Date	:NA
(33) Name of priority country	:NA
(86) International Application No	:PCT//
Filing Date	:01/01/1900
(87) International Publication No	: NA
(61) Patent of Addition to Application Number	:NA
Filing Date	:NA
(62) Divisional to Application Number	:NA
Filing Date	:NA

(71)**Name of Applicant :**
1)Puneeth R P
Address of Applicant :Assistant Professor, Department of CSE, #602, Block-A, NMAMIT Staff Quarters, Nitte, Karkala, Udupi-5741 Research Scholar , School of C&IT, REVA University Bangalore Karnataka India
2)G Parthasarathy
(72)**Name of Inventor :**
1)Puneeth R P
2)G Parthasarathy

(57) Abstract :
Blockchain is considered as one of the booming technology and provides set of promising features that can certainly solve existing issues in real time applications. Decentralization, greater transparency, improved traceability, and secure architecture can revolutionize the health care systems. With the help of advancement in computer technologies most of the healthcare institutions try to store patient data digitally rather than paper based method. Electronic Health records (EHR™s) are considered as one of the most important assets in healthcare system and it is certainly required to be shared among different hospitals and other organizations to improve the diagnosis efficiency. While sharing the patients details certain basic standards such as integrity and confidentiality of the information needs to be considered. Blockchain technology provides the above standards with the features of immutability, and providing the access to the stored information only to authorized users. Hence,presented an idea about sharing the patient medical information among different hospitals and other organizations using blockchain technique, that can help the care-giver (doctors) to be aware about the patient™ previous health track records easily and they can take the decisions about the further medical treatment and diagnosis. This approach also reduces the redundant diagnosis that could be done on the patient and intern this saves the time of the doctors to take a decision about the patient as well as expenses incurred by the patient. Sharding technique also helps in solving the scalability issues in blockchain.

No. of Pages : 8 No. of Claims : 5

(12) PATENT APPLICATION PUBLICATION
(21) Application No.202141029738 A
(19) INDIA
(22) Date of filing of Application :02/07/2021
(43) Publication Date : 16/07/2021

(54) Title of the invention : SYSTEM AND METHOD TO ASSIST A USER IN FINANCIAL PLANNING

(51) International classification	:G06Q0040000000, G06Q0040020000, G06Q0040060000, G06N0020000000, H04W0016180000	(71)**Name of Applicant :** **1)Nikhila Putcha** Address of Applicant :H No: 6-95/34/1, Plot 10, Huda Colony, Chandanagar, Hyderabad - 500050, Telangana, India Telangana India
(31) Priority Document No	:NA	(72)**Name of Inventor :**
(32) Priority Date	:NA	**1)Nikhila Putcha**
(33) Name of priority country	:NA	**2)Sameer Shashank**
(86) International Application No	:PCT//	
Filing Date	:01/01/1900	
(87) International Publication No	: NA	
(61) Patent of Addition to Application Number	:NA	
Filing Date	:NA	
(62) Divisional to Application Number	:NA	
Filing Date	:NA	

(57) Abstract :
SYSTEM AND METHOD TO ASSIST A USER IN FINANCIAL PLANNING ABSTRACT A system (10) to assist a user in financial planning is disclosed. The plurality of subsystems includes a collection subsystem (20) configured to collect financial data associated with the user from one or more user inputs and collect market real time data from one or more data sources. The plurality of subsystem includes a data processing subsystem (30), configured to process the collected financial data and the collected market real time data using an artificial intelligence based neural network technique. The plurality of subsystems includes a computation subsystem (40), configured to compute a set of financial goal parameters based on the processed financial data and the processed market real time data. The plurality of subsystems includes a financial goal generation subsystem (50), configured to generate a financial goal plan for the user based on the computed set of financial goal parameters. The plurality of subsystems also includes an output subsystem (60), configured to the output generated financial goal plan. FIG. 1

No. of Pages : 49 No. of Claims : 23

(12) PATENT APPLICATION PUBLICATION
(21) Application No.202141029758 A
(19) INDIA
(22) Date of filing of Application :02/07/2021
(43) Publication Date : 16/07/2021

(54) Title of the invention : DEEP LEARNING BASED AUTOMATIC ATTENDANCE GENERATOR: AN IMAGE PROCESSING TOWARDS DATA SCIENCE

(51) International classification	:G06K0009000000, G06K0009620000, G07C0001100000, G06K0009460000, G06F0021350000
(31) Priority Document No	:NA
(32) Priority Date	:NA
(33) Name of priority country	:NA
(86) International Application No	:PCT//
Filing Date	:01/01/1900
(87) International Publication No	: NA
(61) Patent of Addition to Application Number	:NA
Filing Date	:NA
(62) Divisional to Application Number	:NA
Filing Date	:NA

(71)**Name of Applicant :**
1)Dr. MEENAKSHI R
Address of Applicant :PROFESSOR DEPARTMENT OF COMPUTER SCIENCE AND ENGINEERING, CHENNAI INSTITUTE OF TECHNOLOGY SARATHY NAGAR, PUDUPEDU VILLAGE, SH-113, KUNDRATHUR“SRIPERUMBUDUR MAIN ROAD, KUNDRATHUR, CHENNAI, KANCHIPURAM DISTRICT, TAMIL NADU, INDIA. PIN 600069 Tamil Nadu India
2)Mr.A.ILAVENDHAN
3)Dr. P. BOOMA DEVI
4)Dr. HARISH G UGRAIAH
5)Dr. K.KANIMOZHI
6)Dr. B. RAJA MOHAMED RABI
7)Mr. A.SANYASI RAO
8)Mrs.YASHASWINI M
9)Mr. PUNEETH KUMAR M V
10)Mr. BISWADIP BASU MALLIK
(72)**Name of Inventor :**
1)Dr. MEENAKSHI R
2)Mr.A.ILAVENDHAN
3)Dr. P. BOOMA DEVI
4)Dr. HARISH G UGRAIAH
5)Dr. K.KANIMOZHI
6)Dr. B. RAJA MOHAMED RABI
7)Mr. A.SANYASI RAO
8)Mrs.YASHASWINI M
9)Mr. PUNEETH KUMAR M V
10)Mr. BISWADIP BASU MALLIK

(57) Abstract :
DEEP LEARNING BASED AUTOMATIC ATTENDANCE GENERATOR: AN IMAGE PROCESSING TOWARDS DATA SCIENCE This invention relates to an image processing towards data science. Attendance entry or the counting performed to measure the strength of the gathering for many purposes such as duty presence for salary, physical presence in classroom, security purpose entering a meeting hall, to generate dataset for future use, etc. The traditional method of attendance generated is time consuming and maintaining a dataset for future use is tedious. In order to overcome this issue with the help of latest technologies attendance entry can be automated. The face recognition algorithm widely used is Local Binary Pattern (LBP), which generates binary code for each cell and identifies the picture for comparison with the standard image. This LBP algorithm is modified and incorporated with the deep learning tools to automate the attendance generator.

No. of Pages : 19 No. of Claims : 6

(12) PATENT APPLICATION PUBLICATION
(21) Application No.202141029770 A
(19) INDIA
(22) Date of filing of Application :02/07/2021
(43) Publication Date : 16/07/2021

(54) Title of the invention : A MAXILLARY ORIENTATION DEVICE-WHICH HELPS SHAPING MAXILLARY OCCLUSAL RIM BASED ON THE GUIDING PLANES

(51) International classification	:A61C0019050000, A61C0011000000, A61C0013340000, A61C0013097000, A61K0031417400
(31) Priority Document No	:NA
(32) Priority Date	:NA
(33) Name of priority country	:NA
(86) International Application No	:NA
Filing Date	:NA
(87) International Publication No	: NA
(61) Patent of Addition to Application Number	:NA
Filing Date	:NA
(62) Divisional to Application Number	:NA
Filing Date	:NA

(71)**Name of Applicant :**
1)Dr.B.ESWARAN
Address of Applicant :No-1/573, 6th STREET, JOTHI NAGAR, PADIANALLUR, CHENNAI, TAMILNADU, IDNIA 600052. Tamil Nadu India
2)Dr. SHANTHA PRIYA . R
(72)**Name of Inventor :**
1)KARTHIKEYAN MATHIYAZHAGAN

(57) Abstract :
Abstract Precise occlusal plane orientation is an ideal requirement in prosthodontic reconstruction treatment as it helps in shaping both maxillary and mandibular occlusal rims. Anterior part of maxillary occlusal rim helps in achieving esthetics and phonetics, while posterior part of the occlusal rim helps in masticating the food bolus efficiently between 2 occluding surfaces by use of masticatory muscle. Muscle activity can be minimized when occlusal plane is made parallel to the lost natural teeth. Conventionally interpupillary line and ala tragal line are used as a guide to check parallelism between anterior and posterior occlusal rim respectively. This maxillary orientation device is a new device developed to shape the occlusal plane parallel to both these guiding planes eventually resulting in establishing ideal occlusal plane thereby saving clinicians and patient's chair time.

No. of Pages : 29 No. of Claims : 10

(12) PATENT APPLICATION PUBLICATION
(21) Application No.202141029922 A
(19) INDIA
(22) Date of filing of Application :03/07/2021
(43) Publication Date : 16/07/2021

(54) Title of the invention : WIRELESS AUTOMATION SYSTEM WITH PLURALITY OF VOICE RECOGNIZATION AND ENCRYPTION OF FAST FOURIER TRANSFORMATION

(51) International classification	:H04L0012280000, G10L0017000000, H01R0013713000, G10L0015220000, F16H0059020000	(71)**Name of Applicant :** **1)Sagar Bodala** Address of Applicant :Sr. Software Engineer, Do.NO:28-13-4/1, 1st Floor, Sree Ramakrishna Eng.Co., Surya Bagh, , Visakhapatnam Andhra Pradesh India
(31) Priority Document No	:NA	**2)Venkatarao Dadi**
(32) Priority Date	:NA	**3)Naresh Pathakamuri**
(33) Name of priority country	:NA	**4)NagaDivya Vangapandu**
(86) International Application No	:NA	(72)**Name of Inventor :**
Filing Date	:NA	**1)Venkatarao Dadi**
(87) International Publication No	: NA	**2)Dr. Swapna Peravali**
(61) Patent of Addition to Application Number	:NA	**3)Naresh Pathakamuri**
Filing Date	:NA	**4)Mohammed Ashik**
(62) Divisional to Application Number	:NA	**5)Dr. M. Ramesh Patnaik**
Filing Date	:NA	**6)Saujanya K**
		7)Dr. D.V. Rama Koti Reddy

(57) Abstract :
The present disclosure relates to a Home automation (HA) system 100 with wireless Control modes 102 103 or Manual (physical) mode 101. Wherein Connecting (configured) phase line of load with isolated high power output terminals 4003 4004 4005 of Relay (RL) 4002 terminals and existing 1-way 1012 or 2-way 1011 electrical switches to eliminate confusion of user from short circuit phase line 3000 (malfunctioning due to physical connectivity of electrical switches) during controlling of appliances in Control mode 102 103 by controller. In network or controller failed condition, Manual (physical) 101mode with existing electrical wiring system in home is used to control the appliances until HA 100 system is repaired. So user can easily control the appliances in Manual 100 mode like general electrical switching system in home. HA 100 system includes method of One level security or two level security to control the appliances in wireless Control modes 102 103. In One level secured HA 100 system also includes a method of IOPVC (Initial Observed Plurality of Voice Commands) 1022 in controller program to minimize the training process of voice for a new person in Google voice assisted mobile application. In two level security of HA 100 system, additional voice security for user authentication is implemented using the method of EVC (Encrypted voice command) 1023 in controller program and it is implemented using FFT (Fast Fourier Transformation).

No. of Pages : 32 No. of Claims : 8

(12) PATENT APPLICATION PUBLICATION
(19) INDIA
(22) Date of filing of Application :04/07/2021

(21) Application No.202141029981 A
(43) Publication Date : 16/07/2021

(54) Title of the invention : RELIABLE 3D PRINTING SYSTEM USING IOT AND METHODS THEREOF

(51) International classification	:H01M0008020200, B41J0003407000, A41D0027080000, C09D0011104000, D06P0001520000
(31) Priority Document No	:NA
(32) Priority Date	:NA
(33) Name of priority country	:NA
(86) International Application No	:NA
Filing Date	:NA
(87) International Publication No	: NA
(61) Patent of Addition to Application Number	:NA
Filing Date	:NA
(62) Divisional to Application Number	:NA
Filing Date	:NA

(71)**Name of Applicant :**
1)Sushma Devaramani
Address of Applicant :M.Sc Autonomous Systems sushma.devaramani@gmail.com +91 8431026713 Karnataka India
2)Dr. Anilkumar V Nandi
3)Dr. Jyoti Bali
4)Dr. Sachin Karadgi
5)Dr. Vinodkumar Meti
6)Amit Talli
7)Nagaraj Benakanahalli
8)Doddabasappa Marebal
9)Shridhar Doddamani
10)Girish Karikatti
11)Channavva. B. Kolanur
12)Dr. Piyush Kumar Pareek
(72)**Name of Inventor :**
1)Sushma Devaramani
2)Dr. Anilkumar V Nandi
3)Dr. Jyoti Bali
4)Dr. Sachin Karadgi
5)Dr. Vinodkumar Meti
6)Amit Talli
7)Nagaraj Benakanahalli
8)Doddabasappa Marebal
9)Shridhar Doddamani
10)Girish Karikatti
11)Channavva. B. Kolanur
12)Dr. Piyush Kumar Pareek

(57) Abstract :
The two most widely employed technologies today are embossing and screen printing, which gives clothing designs a raised appearance. 2D printing was 175 required by a textile industry that is using ink jet printing technology to implement on polyester fabric. The reason for developing the process was to automate the current process and add 3D printing to the existing design methods. In an attempt to make this process more dehumanising, 3D printing technology has been used. 180

No. of Pages : 12 No. of Claims : 1

(12) PATENT APPLICATION PUBLICATION
(21) Application No.202141029982 A
(19) INDIA
(22) Date of filing of Application :04/07/2021
(43) Publication Date : 16/07/2021

(54) Title of the invention : NOVEL APPROACH FOR 3D PRINTING

(51) International classification	:B29C0064106000, D06M0101320000, D06N0003120000, B32B0007120000, B33Y0080000000
(31) Priority Document No	:NA
(32) Priority Date	:NA
(33) Name of priority country	:NA
(86) International Application No	:NA
Filing Date	:NA
(87) International Publication No	: NA
(61) Patent of Addition to Application Number	:NA
Filing Date	:NA
(62) Divisional to Application Number	:NA
Filing Date	:NA

(71)**Name of Applicant :**
1)Sushma Devaramani
Address of Applicant :M.Sc Autonomous Systems sushma.devaramani@gmail.com +91 8431026713 Karnataka India
2)Dr. Anilkumar V Nandi
3)Dr. Jyoti Bali
4)Doddabasappa Marebal
5)Shridhar Doddamani
6)Girish Karikatti
7)Channavva. B. Kolanur
8)Dr. Sachin Karadgi
9)Dr. Vinodkumar Meti
10)Amit Talli
11)Nagaraj Benakanahalli
12)Dr. Piyush Kumar Pareek
(72)**Name of Inventor :**
1)Sushma Devaramani
2)Dr. Anilkumar V Nandi
3)Dr. Jyoti Bali
4)Doddabasappa Marebal
5)Shridhar Doddamani
6)Girish Karikatti
7)Channavva. B. Kolanur
8)Dr. Sachin Karadgi
9)Dr. Vinodkumar Meti
10)Amit Talli
11)Nagaraj Benakanahalli
12)Dr. Piyush Kumar Pareek

(57) Abstract :
ABSTRACT Invention picks a polymeric material that's best suited for the fabric for the particular printing procedure. Several materials are being explored and tested on the thin polyester fabric substrate. The polyester printer uses an XY plotting mechanism to demonstrate the printing methodology.

No. of Pages : 10 No. of Claims : 1

(12) PATENT APPLICATION PUBLICATION
(21) Application No.202141029983 A
(19) INDIA
(22) Date of filing of Application :04/07/2021
(43) Publication Date : 16/07/2021

(54) Title of the invention : HIGH RESOLUTION REMOTE SENSING IMAGERY ROAD EXTRACTION USING DEEP LEARNING

(51) International classification	:G06K0009620000, G06N0003040000, G06K0009000000, G06N0003080000, G06T0007110000
(31) Priority Document No	:NA
(32) Priority Date	:NA
(33) Name of priority country	:NA
(86) International Application No	:NA
Filing Date	:NA
(87) International Publication No	: NA
(61) Patent of Addition to Application Number	:NA
Filing Date	:NA
(62) Divisional to Application Number	:NA
Filing Date	:NA

(71)**Name of Applicant :**
1)Dr. Bhagyashree Ambore
Address of Applicant :Assistant Professor Cambridge Institute of Technology Bangalore Karnataka India
2)Mr. Rajesh kumar S
3)Mr. Praveen N
4)Mrs. Kavya T C
5)Mrs. Rashmi D
(72)**Name of Inventor :**
1)Dr. Bhagyashree Ambore
2)Mr. Rajesh kumar S
3)Mr. Praveen N
4)Mrs. Kavya T C
5)Mrs. Rashmi D

(57) Abstract :
In the modern traffic system, the road network plays an essential role; the road layout often changes with growth. Due to advances in high-resolution remote sensing and semantic segmentation successes utilizing deep computer-relevant learning, it is becoming more common to extract the 5 road network from high-resolution remote sensing images and a new tool to update the geospatial database. Since the deep-convoluted neural network training dataset is limited to a fixed size that leads to roads passing through each specimen and different types of highways have different widths, this Innovation provides a segmentation model based on densely connected convolutional networks (densaNet) and introduces local and global focus units. This innovation aims to provide a new road 10 extraction system, including local and global information, that can effectively remove the road network from remote sensing images

No. of Pages : 26 No. of Claims : 5

(12) PATENT APPLICATION PUBLICATION
(21) Application No.202141029984 A
(19) INDIA
(22) Date of filing of Application :04/07/2021
(43) Publication Date : 16/07/2021

(54) Title of the invention : ATITHIFEEDBACK SYSTEM HOTEL MANAGEMENT

(51) International classification	:G06Q0030020000, G06Q0010060000, G06Q0050120000, G06Q0030000000, G06Q0010100000
(31) Priority Document No	:NA
(32) Priority Date	:NA
(33) Name of priority country	:NA
(86) International Application No	:NA
Filing Date	:NA
(87) International Publication No	: NA
(61) Patent of Addition to Application Number	:NA
Filing Date	:NA
(62) Divisional to Application Number	:NA
Filing Date	:NA

(71)**Name of Applicant :**
1)Dr. T.MILTON
Address of Applicant :Designation- Dean, Tourism and Hospitality Management Department: Tourism and Hospitality Management Institution: Bharath Institute of Higher Education & Research, 173, Agaram Road, Selaiyur, Chennai 600073. Ph-9884143887,8072406672 Mail id- tmilton1971@gmail.com Tamil Nadu India
2)Dr. R.KANNAN
3)P. MANIKANDAN
4)JITENDRA DAS
5)K.VIJAYALAKSHMI
6)ABILASH R
7)Dr.JAYAPRAKASHNARAYANA. G.
8)Dr.Piyush Kumar Pareek
(72)**Name of Inventor :**
1)Dr. T.MILTON
2)Dr. R.KANNAN
3)P. MANIKANDAN
4)JITENDRA DAS
5)K.VIJAYALAKSHMI
6)ABILASH R
7)Dr.JAYAPRAKASHNARAYANA. G.
8)Dr.Piyush Kumar Pareek

(57) Abstract :
AtithiFeedback System provides a customer-centric approach that creates a meaningful andmemorable experience for hotel visitors. It helps the management to provide customers with a satisfactory experience, promoting their return rate. The Invention focuses on actionable 10 insights and leads to increased productivity due to the quick identification of faulty departments. This has refined the service standards of hotels for a better customer experience. The Invention Measures customers satisfaction, Improve Hotel™s Products & Services, Improve the Hotel™s Staff Behaviour and Hospitality, Improve Customer Retention, Pricingand Build Reputation, Shows You Value the Customer™s Opinions & Help Make Data-Driven 15 Decisions. The Invention identifies unsatisfied customers and alerts the staff for better services in the areas of improvement based on customized choices. The Invention uses Artificial Intelligence and Decision Trees structure for quick action to be taken depending on the critical situation. The Invention ensures the reliable feedback of the customer and ensures Continuous Improvements in Quality delivery.

No. of Pages : 10 No. of Claims : 2

(12) PATENT APPLICATION PUBLICATION
(21) Application No.202141030001 A
(19) INDIA
(22) Date of filing of Application :04/07/2021
(43) Publication Date : 16/07/2021

(54) Title of the invention : SYSTEM AND METHOD FOR RANSOMWARE MITIGATION

(51) International classification	:H04L0009080000, H04L0009320000, G06F0021560000, G06Q0020400000, G06Q0020360000
(31) Priority Document No	:NA
(32) Priority Date	:NA
(33) Name of priority country	:NA
(86) International Application No	:PCT//
Filing Date	:01/01/1900
(87) International Publication No	: NA
(61) Patent of Addition to Application Number	:NA
Filing Date	:NA
(62) Divisional to Application Number	:NA
Filing Date	:NA

(71)**Name of Applicant :**
1)MUKUND SARMA
Address of Applicant :63 SP COLONY TRIMULGHERRY, HYDERABAD-500015 Telangana India
2)DR. SATYANARAYANA VOLLALA
3)MOHAMMAD RASHEED AHMED
4)KANDALA MEENAKSHI
(72)**Name of Inventor :**
1)MUKUND SARMA
2)DR. SATYANARAYANA VOLLALA
3)MOHAMMAD RASHEED AHMED
4)KANDALA MEENAKSHI

(57) Abstract :
SYSTEM AND METHOD FOR RANSOMWARE MITIGATION ABSTRACT The present invention provides a system and method for ransomware mitigation. The disclosure describes collection of credentials of a new user and associating a KYC token to create a KYC record. Upon receiving authentication of the user, smart contract is called that are deployed on a blockchain to perform one or more operations. A unique asset token is associated during performing of the operation and applying cryptographic secret sharing algorithm on the asset token and the file. Further, associating one or more non-essential shares and one or more essential share.

No. of Pages : 27 No. of Claims : 9

(12) PATENT APPLICATION PUBLICATION
(21) Application No.202141030003 A
(19) INDIA
(22) Date of filing of Application :04/07/2021
(43) Publication Date : 16/07/2021

(54) Title of the invention : A SYSTEM AND METHOD FOR DATA ENCRYPTION BETWEEN IOT DEVICES AND A NETWORK GATEWAY

(51) International classification	:H04L0029080000, H04L0012240000, H04W0004700000, H04W0012080000, G06F0021600000
(31) Priority Document No	:NA
(32) Priority Date	:NA
(33) Name of priority country	:NA
(86) International Application No	:PCT//
Filing Date	:01/01/1900
(87) International Publication No	: NA
(61) Patent of Addition to Application Number	:NA
Filing Date	:NA
(62) Divisional to Application Number	:NA
Filing Date	:NA

(71)**Name of Applicant :**
1)Mr.S.Jaya Prakash
Address of Applicant :Associate Professor, Department of Computer Science and Engineering, Idhaya Engineering College for Women, Chinnasalem, Kallakurichi District, Tamil Nadu, India. Pin Code:606201 Tamil Nadu India
2)Mrs.K.Mahalakshmi
3)Prof.G.Shankar Lingam
4)Dr.Seetharam Khetavath
5)Dr.P.Harikrishnaprasad
6)Mrs.B Shoba Rani
7)Dr.Sushma Jaiswal
8)Mr.Tarun Jaiswal
9)Dr.S.Devaraju
10)Dr.Mandadi Srinivas
(72)**Name of Inventor :**
1)Mr.S.Jaya Prakash
2)Mrs.K.Mahalakshmi
3)Prof.G.Shankar Lingam
4)Dr.Seetharam Khetavath
5)Dr.P.Harikrishnaprasad
6)Mrs.B Shoba Rani
7)Dr.Sushma Jaiswal
8)Mr.Tarun Jaiswal
9)Dr.S.Devaraju
10)Dr.Mandadi Srinivas

(57) Abstract :
A SYSTEM AND METHOD FOR DATA ENCRYPTION BETWEEN IOT DEVICES AND A NETWORK GATEWAY [035] The present invention discloses a system and method for data encryption 5 between IoT devices and a network gateway in an IoT connectivity. The system includes, but not limited to, one or more processing units provided with each of the IoT devices. The processing unit requests from other IoT devices for the information to the network gateway and initiates a unique identifier generation by using an embedded security module (ESM) of the network gateway with data 10 encryption. Further, the system receives the unique identifier from the ESM, and perform a processing with a time synchronization bit information promptly among the IoT devices. Accompanied Drawing [FIG. 1]

No. of Pages : 21 No. of Claims : 7

(12) PATENT APPLICATION PUBLICATION
(21) Application No.202141030007 A
(19) INDIA
(22) Date of filing of Application :05/07/2021
(43) Publication Date : 16/07/2021

(54) Title of the invention : LOW COST AUTOMATIC IRRIGATION SYSTEM USING SOIL MOISTURE SENSORS

(51) International classification	:A01G0025160000, A01G0027000000, A01G0025090000, A01G0025060000, A01G0027020000
(31) Priority Document No	:NA
(32) Priority Date	:NA
(33) Name of priority country	:NA
(86) International Application No	:NA
Filing Date	:NA
(87) International Publication No	: NA
(61) Patent of Addition to Application Number	:NA
Filing Date	:NA
(62) Divisional to Application Number	:NA
Filing Date	:NA

(71)**Name of Applicant :**
1)Pavithra M P
Address of Applicant :#222 REVA University Bangalore Karnataka India 560064 Karnataka India
(72)**Name of Inventor :**
1)Pavithra M P
2)Pushpa Lumina
3)Gudibande Subramani Arun
4)Shivakumar Bandamnavar Bharat

(57) Abstract :
In traditional irrigation approach where water is irrigated on the land without adequate control measures, crops sometimes undergo increased stress with disparities in the soil moisture which consequently reduce the crop performance and output. We come up with a prototype to increase crop yield while considering adequate agricultural water management and labour reduction, by adequate control measures in the irrigation process. An automatic irrigation system is designed and developed by integrating several hardware and software features. The system is designed to determine when exactly the soil of crops need water and deliver a controlled amount of water to the root zone of the crops based on the soil moisture state. With the microcontroller, the data obtained from the soil at the roots of the crops will determined how much water for irrigation is needed at a point in time, and supplies it, thereby incorporating good water management practice. The system is designed to run 24/7 on renewable solar energy.

No. of Pages : 6 No. of Claims : 3

(12) PATENT APPLICATION PUBLICATION
(21) Application No.202141030008 A
(19) INDIA
(22) Date of filing of Application :05/07/2021
(43) Publication Date : 16/07/2021

(54) Title of the invention : IOT BASED WATER QUALITY MANAGEMENT SYSTEM USING ARDUINO

(51) International classification	:G01N0033180000, G01N0021590000, C02F0001000000, G01N0021310000, G01N0027070000	(71)**Name of Applicant :** **1)Pushpa Lumina** Address of Applicant :Assistant Professor, School of civil engineering, REVA University Karnataka India (72)**Name of Inventor :** **1)Pushpa Lumina** **2)Pavithra M P** **3)Bhoomika U J** **4)Bhoja Raja K U**
(31) Priority Document No	:NA	
(32) Priority Date	:NA	
(33) Name of priority country	:NA	
(86) International Application No	:NA	
Filing Date	:NA	
(87) International Publication No	: NA	
(61) Patent of Addition to Application Number	:NA	
Filing Date	:NA	
(62) Divisional to Application Number	:NA	
Filing Date	:NA	

(57) Abstract :
Water quality tests will give information about the health of the waterway. By testing water over a period of time , the changes in the quality of the water can be seen. The pollution in water is increasing day by day, and many researchers and scientists are trying to solve the problem by checking and maintaining the quality of water. This project focuses mainly on the quality checking of water. The aim of this project is real time monitoring of water Quality and to provide safe supply of drinking water to the public. The water from the source has many contaminants hence it is treated in the treatment plant before its supply and to analyze the water quality parameter such as pH, turbidity, temperature and TDS and so on, it™s really very hectic to collect the sample and test it in a laboratory and moreover its very time consuming and all parameters can™t be tested simultaneously with accurate results. So, in this project a IoT device is developed which can make real time monitoring of water Quality with the accurate results. Here pH, turbidity, temperature and TDS Sensors are programmed and connected to Atmega and NodeMCU (Arduino) Microcontroller Boards which will sense all the water quality parameters mentioned above and shows the accurate results in the web interface. This device is programmed for the permissible limits such as Turbidity(1-5NTU), TDS (50-150Mg\L), Temperature (50-72), pH (6.5-8.5). The results of the project depend on the sample tested. The outcome of this Project includes (1) results with high accuracy and consumes less time duration, (2) Low cost and affordable device for water quality testing, (3) Low Maintenance, (4) Reduces tedious job involved in Manual water quality testing. The future work of this project includes it can be also used for sewage water by adopting different sensors.

No. of Pages : 8 No. of Claims : 3

(12) PATENT APPLICATION PUBLICATION
(21) Application No.202141030010 A
(19) INDIA
(22) Date of filing of Application :05/07/2021
(43) Publication Date : 16/07/2021

(54) Title of the invention : VERTICAL AXIS WINDTURBINE

(51) International classification	:F03D0009250000, F03D0013200000, F03D0003060000, F03D0003000000, H02K0021240000	(71)**Name of Applicant :**
(31) Priority Document No	:NA	**1)Mr. S K .Shreenivas**
(32) Priority Date	:NA	Address of Applicant :266A, Srisendhur gardens, Phase I , Kondaiyampalayam, Varadaiyengarpalayam, Coimbatore, Tamilnadu, India 641110. Tamil Nadu India
(33) Name of priority country	:NA	**2)Mr.Easwara karthik Krishnan**
(86) International Application No	:NA	**3)B.Gopi**
Filing Date	:NA	**4)T.R. Ganesh Babu**
(87) International Publication No	: NA	(72)**Name of Inventor :**
(61) Patent of Addition to Application Number	:NA	**1)Mr. S K .Shreenivas**
Filing Date	:NA	**2)Mr.Easwara karthik Krishnan**
(62) Divisional to Application Number	:NA	**3)B.Gopi**
Filing Date	:NA	**4)T.R. Ganesh Babu**

(57) Abstract :
In view of the foregoing, there exists a need for energy in various locations and the evaporation of land site for larger wind energy projects these type of new innovative wind turbine will support the future with these type of decentralized load handling capability which provides a universal and highly versatile system for domestic usage as well as industrial usage. Therefore, the objective of the project is to provide an improved and an cost effective and maintenance free equipment which can be easily installed to the present buildings in private and public , to provide green energy that is economical and safe in operation to the present installations and will overcome the limitations, disadvantages and shortcomings of the prior art devices. A innovative type of spiral rotor blades twisted 120 Degrees apart from lower end to the top end .The above is directly connected with a specially designed axial flux generator without cogging effect to convert Wind power to Electrical power at low Wind speeds.

No. of Pages : 8 No. of Claims : 6

(12) PATENT APPLICATION PUBLICATION
(21) Application No.202141030011 A
(19) INDIA
(22) Date of filing of Application :05/07/2021
(43) Publication Date : 16/07/2021

(54) Title of the invention : GREEN CEMENT CONSTRUCTION: VILLAGE AND HIGHWAY ROAD CONSTRUCTION USING GREEN CONCRETE

(51) International classification	:G06Q0010000000, E01C0003000000, C04B0022000000, C04B0018140000, C04B0014060000
(31) Priority Document No	:NA
(32) Priority Date	:NA
(33) Name of priority country	:NA
(86) International Application No	:NA
Filing Date	:NA
(87) International Publication No	: NA
(61) Patent of Addition to Application Number	:NA
Filing Date	:NA
(62) Divisional to Application Number	:NA
Filing Date	:NA

(71)**Name of Applicant :**
1)Dr. N Jeevan (Assistant Professor)
Address of Applicant :Department of Civil Engineering, Bangalore Institute of Technology, K R Road, V V Pura, Bangalore 560004 Karnataka India
2)Mr. Puneeth M S (Assistant Professor)
3)Mr. K V Mahesh Chandra (Assistant Professor)
4)Mrs. Kavyashree R R (Assistant Professor)
5)Mr. Arun Kumar H R (Assistant Professor)
(72)**Name of Inventor :**
1)Dr. N Jeevan (Assistant Professor)
2)Mr. Puneeth M S (Assistant Professor)
3)Mr. K V Mahesh Chandra (Assistant Professor)
4)Mrs. Kavyashree R R (Assistant Professor)
5)Mr. Arun Kumar H R (Assistant Professor)

(57) Abstract :
ABSTRACT The present invention relates to a method and system for creating an eco-friendly concrete utilizing recycling waste and industrial products, which is called green concrete. Green concrete provides less maintenance cost, material cost and repair cost compared to conventional concrete. This concrete reduces the carbon dioxide emission by 32%. The use of these materials in road making is based on technical, economic, and ecological criteria. Several million metric tons of industrial wastes are produced in these establishments. If these materials can be suitably utilised in highway construction, the pollution and disposal problems may be partly reduced. The bulk use of these solid wastes, it was thought expedient to test these materials and to develop specifications to enhance the use of these industrial wastes in road making, in which higher economic returns may be possible.

No. of Pages : 19 No. of Claims : 9

(12) PATENT APPLICATION PUBLICATION
(21) Application No.202141030012 A
(19) INDIA
(22) Date of filing of Application :05/07/2021
(43) Publication Date : 16/07/2021

(54) Title of the invention : METHOD AND SYSTEM FOR CLASSIFYING MAGNETIC RESONANCE IMAGES OF SCLEROSIS PATIENTS USING DEEP LEARNING TECHNIQUES

(51) International classification	:G06K0009620000, G16H0050200000, G06T0007000000, G06K0009460000, G06T0007110000
(31) Priority Document No	:NA
(32) Priority Date	:NA
(33) Name of priority country	:NA
(86) International Application No	:NA
Filing Date	:NA
(87) International Publication No	: NA
(61) Patent of Addition to Application Number	:NA
Filing Date	:NA
(62) Divisional to Application Number	:NA
Filing Date	:NA

(71)**Name of Applicant :**
1)Ms. Kalpana Narayan Rode (Assistant Professor)
Address of Applicant :Sharad Institute of technology college of Engineering, Yadrav, Ichalkaranji, Kolhapur - 416121 Home: Jotiba road, Vijay colony, Gotkhinde plot, Sangliwadi, Sangli Karnataka India
2)Dr. Rajashekar J. S (Professor)
(72)**Name of Inventor :**
1)Ms. Kalpana Narayan Rode (Assistant Professor)
2)Dr. Rajashekar J. S (Professor)

(57) Abstract :
ABSTRACT The present invention related to a method and system for classifying a magnetic resonance images of a plurality of sclerosis patients using deep learning techniques. To start with, the method and system pre-process the brain images of a patient using an ROI extraction module and performs skull stripping using thresholding. Subsequently, the tissues are segmented using sparse FCM model to solve the high-dimensional data issues that occur due to the complexity in identifying the relevant features. Further, the method and system perform pixel-based feature extraction by extracting tissue label, pixel intensity, and texture features. Later, the method and system perform lesion classification using an algorithm based neural network/deep learning technique to provide normal and abnormal results of the patient and accordingly classifying the sclerosis patients.

No. of Pages : 14 No. of Claims : 6

(12) PATENT APPLICATION PUBLICATION
(21) Application No.202141030019 A
(19) INDIA
(22) Date of filing of Application :05/07/2021
(43) Publication Date : 16/07/2021

(54) Title of the invention : REVERSIBLE AND TUNABLE SCRAMBLING EMBEDDING METHOD ON VIDEO FILES.

(51) International classification	:H04N0021835800, H04N0019467000, G06T0001000000, H04N0021238900, H04N0001320000
(31) Priority Document No	:NA
(32) Priority Date	:NA
(33) Name of priority country	:NA
(86) International Application No	:NA
Filing Date	:NA
(87) International Publication No	: NA
(61) Patent of Addition to Application Number	:NA
Filing Date	:NA
(62) Divisional to Application Number	:NA
Filing Date	:NA

(71)**Name of Applicant :**
1)Dr. Baswaraj Gadgay (Regional Director)
Address of Applicant :Visvesvaraya Technological University (VTU), Regional Campus, Kalaburagi-585105, Karnataka, India. mail id: b_gadgay@rediffmail.com Mobile No.: +91 9448754546 Karnataka India
2)Mr. Jaladi Vivek
(72)**Name of Inventor :**
1)Dr. Baswaraj Gadgay (Regional Director)
2)Mr. Jaladi Vivek

(57) Abstract :
ABSTRACT [652] Our Invention Reversible and Tunable Scrambling Embedding Method on Video files is a reversible unified method to scramble an image/Video and embed information into it using 2-D Matrix (22,44,88,1616.) rotation methods. [654] The invention is an Each row (column) is divided into groups and clock wise rotated to the left (bottom) to distort the Video/Image and also a unique state are derived during the rotation process and utilized to embed external information. [656] The invented technology is also the pixel correlations in the vertical and horizontal uni-directions are exploited to reconstruct the original Video/image and extract the embedded information. [658] The invented method is able to control the output Video/image quality to achieve its intended distortion using the control parameters and the Experiments are conducted to verify the basic performance of the proposed method. [680] The invented method and technology is a payload, quality degradation of the output Video/image and also [670] It is verified that the original Video/ image can be perfectly reconstructed and the proposed method itself is able to achieve an average effective payload up to 9015234.0 bits. [768] SSIM values are measured to determine the range of achievable distortion using different parameters.

No. of Pages : 16 No. of Claims : 7

(12) PATENT APPLICATION PUBLICATION
(21) Application No.202141030023 A
(19) INDIA
(22) Date of filing of Application :05/07/2021
(43) Publication Date : 16/07/2021

(54) Title of the invention : A SYSTEMISED AND AUTOMATED METHOD FOR THE MANUFACTURING OF FERMENTING DRY POWDER COMPOSED OF RICE

(51) International classification	:A23L0007196000, A23P0020120000, A23L0007104000, A23L0003400000, A23L0033160000
(31) Priority Document No	:NA
(32) Priority Date	:NA
(33) Name of priority country	:NA
(86) International Application No	:NA
Filing Date	:NA
(87) International Publication No	: NA
(61) Patent of Addition to Application Number	:NA
Filing Date	:NA
(62) Divisional to Application Number	:NA
Filing Date	:NA

(71)**Name of Applicant :**
1) S. GNANAMANJARI
Address of Applicant :C-2, SICAL RACE VIEW APARTMENTS, 2, RACE COURSE INTERIOR ROAD, GUINDY, CHENNAI-600 032, TAMILNADU, INDIA. Tamil Nadu India
(72)**Name of Inventor :**
1) S. GNANAMANJARI

(57) Abstract :
The invention discloses a system, a process and a procedure for making dry admixture using at least two ingredients in combination of a cereal / pulses and a rice grain with long shelf life and easy to prepare at home providing excellent consistency and taste to the idli and dosa obtained by the usage of such composition. The method for the preparation of the dry and powdered form of the fermented rice and cereal composition through a unique system comprises the steps of obtaining and cleaning the preferred quality and sized rice grains of pre-determined quantity, completely subjecting the said preferred rice grains to hydrolysis process at room temperature for 8 to 12 hours; dehydrating the said hydrolysis processed grains till the pre-determined moisture content is obtained characterized in that said method further comprises processing the urad dal for free of impurities by the application of air and water; mixing the said processed rice grains with the said processed urad dal; transferring the said combination into the processing system and finally initiating the processing system and pre-setting the various control settings for obtaining a moisture free and dry powdered combination of the dosa and idli batter with enhanced shelf life.

No. of Pages : 15 No. of Claims : 10

(12) PATENT APPLICATION PUBLICATION
(21) Application No.202141030043 A
(19) INDIA
(22) Date of filing of Application :05/07/2021
(43) Publication Date : 16/07/2021

(54) Title of the invention : TO EXPLORE THE QUALITY OF DRINKING WATER IN DEVANAHALLI TALUK USING ARC-GIS

(51) International classification	:G06Q0050260000, G04G0009000000, G06Q0010060000, C02F0103060000, G01N0033180000
(31) Priority Document No	:NA
(32) Priority Date	:NA
(33) Name of priority country	:NA
(86) International Application No	:NA
Filing Date	:NA
(87) International Publication No	: NA
(61) Patent of Addition to Application Number	:NA
Filing Date	:NA
(62) Divisional to Application Number	:NA
Filing Date	:NA

(71)**Name of Applicant :**
1)Pallavi M
Address of Applicant :Research Scholar, School of civil engineering, REVA University Karnataka India
(72)**Name of Inventor :**
1)Pallavi M
2)Dr. T M Mohan kumar

(57) Abstract :
One of the important source of water is Ground water, 50% of the world's population depends on groundwater of which 43% is used for irrigation use. Hence the quality of groundwater is important . In this project the selected area for studies is devanahali taluk which is located in Bengaluru Rural district. Due to the drastic development of Bengaluru urban city and the location of KIA (Kempegowda International Airport) we need to concentrate on this area in all the aspects for the future sustainability of Bengaluru city. There are about 212 villages and 2 towns in this taluk with a population of 2,09,622 lakh. The total area of devanahali taluk is 446sqkm. Identification of bore wells with the respective latitude and longitude and checking physical-chemical parameters of the water sample and mapping in the software the given task can be executed by integrating various shape file and validated collected bore well data using GIS

No. of Pages : 6 No. of Claims : 3

(12) PATENT APPLICATION PUBLICATION
(21) Application No.202141030061 A
(19) INDIA
(22) Date of filing of Application :05/07/2021
(43) Publication Date : 16/07/2021

(54) Title of the invention : INTELLIGENT WASTE CLASSIFYING BIN FOR ECO-FRIENDLY BIO COMPOSTING

(51) International classification	:G06K0009620000, G06N0003040000, G06K0009000000, G06N0003080000, G06K0009460000
(31) Priority Document No	:NA
(32) Priority Date	:NA
(33) Name of priority country	:NA
(86) International Application No	:NA
Filing Date	:NA
(87) International Publication No	: NA
(61) Patent of Addition to Application Number	:NA
Filing Date	:NA
(62) Divisional to Application Number	:NA
Filing Date	:NA

(71)**Name of Applicant :**
1)AOUTHITHIYE BARATHWAJ SR Y
Address of Applicant :DEPARTMENT OF EEE, SRI SAI RAM ENGINEERING COLLEGE, SAI LEO NAGAR, WEST THAMBARAM, CHENNAI-600044 Tamil Nadu India
2) Dr. SASWATI KUMARI BEHERA
3)VASUNDHARA L
4) SAISUDHA G
5) HAARIHARAN N C
6)SAI GANESH CS
(72)**Name of Inventor :**
1) AOUTHITHIYE BARATHWAJ SR Y
2)Dr. SASWATI KUMARI BEHERA
3)VASUNDHARA L
4)SAISUDHA G
5) HAARIHARAN N C
6) SAI GANESH CS

(57) Abstract :
Waste management is certainly a very complex and difficult process, especially in very large cities. It needs immense manpower and also uses up other resources such as electricity and fuel. This creates a need to use a novel method with help of the latest technologies. Here in this article, we present a new waste classification technique using Computer Vision (CV) and deep learning (DL). To further improve waste classification ability, support machine vectors (SVM) are used. We also decompose the degradable waste with help of rapid composting. In this article, we have mainly worked on the segregation of municipal solid waste (MSW). For this model, we use YOLOv3 (You Only Look Once) a computer vision-based algorithm popularly used to detect objects which are developed based on Convolution Neural Networks (CNNs) which is a machine learning (ML) based tool. They are extensively used to extract features from data, especially image-oriented data.

No. of Pages : 10 No. of Claims : 3

(12) PATENT APPLICATION PUBLICATION
(21) Application No.202141030066 A
(19) INDIA
(22) Date of filing of Application :05/07/2021
(43) Publication Date : 16/07/2021

(54) Title of the invention : MULTI-LEVEL FILTRATION APPARATUS FOR WATER TREATMENT AND METHOD THEREOF

(51) International classification	:C02F0001000000, C02F0009000000, C02F0001680000, C02F0001440000, C02F0001461000	(71)**Name of Applicant :** **1) SOLOMON.S.THOMAS** Address of Applicant :57/2414, 5TH CROSS, AMBALABHAVAN ROAD, KADAVANTHRA, KOCHI-20, KERALA, INDIA Kerala India **2)ANNA S. THOMAS**
(31) Priority Document No	:NA	
(32) Priority Date	:NA	
(33) Name of priority country	:NA	(72)**Name of Inventor :**
(86) International Application No	:NA	**1) SOLOMON.S.THOMAS**
Filing Date	:NA	**2)ANNA S. THOMAS**
(87) International Publication No	: NA	
(61) Patent of Addition to Application Number	:NA	
Filing Date	:NA	
(62) Divisional to Application Number	:NA	
Filing Date	:NA	

(57) Abstract :
The present subject matter relates to a multi-level water filtration apparatus (100) for providing pure drinking water and a method for operating the same. The multi-level filtration apparatus (100) comprises of radial chambers, wherein the radial chambers include at least one primary filtration chamber (111) for filtration of water and discharge of water free of turbidity and suspended solids; at least one alkaline media chamber (117) filled with alkaline media (121) for treatment of the filtered water for production of alkaline water carrying a negative potential; and at least one UV skid with lamp (116) for irradiation of the filtered alkaline water before storage of the water in the outer storage chamber (122).

No. of Pages : 18 No. of Claims : 7

(12) PATENT APPLICATION PUBLICATION
(21) Application No.202141030084 A
(19) INDIA
(22) Date of filing of Application :05/07/2021
(43) Publication Date : 16/07/2021

(54) Title of the invention : SMART IOT BASED METAL AND NON-METALLIC SEGREGATION SYSTEM

(51) International classification	:B65F0001140000, B09B0005000000, G01V0003100000, B29B0017000000, G07F0007060000	(71)**Name of Applicant :** **1)Dr.Rohini Deshpande** Address of Applicant :School of ECE, REVA University, Rukmini Knowledge Park, Kattigenahalli, Yelahanaka, Bengalore, Karnataka, Inida 560064. Karnataka India **2)Anjusjree k**
(31) Priority Document No	:NA	(72)**Name of Inventor :**
(32) Priority Date	:NA	**1)Dr.Rohini Deshpande**
(33) Name of priority country	:NA	**2)Anjusjree k**
(86) International Application No	:NA	
Filing Date	:NA	
(87) International Publication No	: NA	
(61) Patent of Addition to Application Number	:NA	
Filing Date	:NA	
(62) Divisional to Application Number	:NA	
Filing Date	:NA	

(57) Abstract :
ABSTRACT: Nowadays, waste management is a major concern.Wastes are not always waste if it"s separated as it was". World is facing COV1D-19 dangerous state of affairs and due to this people has started using individual bottle that has led to increment of waste and making waste management drawback, unknowingly. So, to resolve this problem, an innovative plan to style a system is employed that may store the used bottle of drinks and beverages. It"s a capability to store those bottles in predefined individual storage and returns points to consumer as a reward. This project proposes an Automation of metal and non-metallic Segregation. It can be designed to sort the trash into metallic waste and non-metallic waste ready to be processed separately for the next process of operation. Once, metal is detected the consumer will be rewarded with points, which can be observed in mobile application.

No. of Pages : 5 No. of Claims : 3

(12) PATENT APPLICATION PUBLICATION
(21) Application No.202141030085 A
(19) INDIA
(22) Date of filing of Application :05/07/2021
(43) Publication Date : 16/07/2021

(54) Title of the invention : METHOD OF AUTOMATIC DETECTION AND CLASSIFICATION OF BRAIN ABNORMALITIES

(51) International classification	:A61B0005000000, A61B0005047600, A61B0005047800, A61B0005048000, G01N0021890000
(31) Priority Document No	:NA
(32) Priority Date	:NA
(33) Name of priority country	:NA
(86) International Application No	:NA
Filing Date	:NA
(87) International Publication No	: NA
(61) Patent of Addition to Application Number	:NA
Filing Date	:NA
(62) Divisional to Application Number	:NA
Filing Date	:NA

(71)**Name of Applicant :**
1)Karpagam Academy of Higher Education
Address of Applicant :Pollachi Main Road, Eachanari Post, Coimbatore, Tamilnadu, India 641021. Tamil Nadu India
2)Sridhar K P
3)Baskar Selvaraj
4)Vignesh Ganesan
(72)**Name of Inventor :**
1)Sridhar K P
2)Baskar Selvaraj
3)Vignesh Ganesan
4)Deepa S
5)Arun M
6)Pavithra S

(57) Abstract :
The present invention automatically detects the brain with an irregular means of discharge (abnormalities) identification based on the characteristics of an EEG (electrocephalogram) signal wherein the procedure involves the following steps: collecting and data analysis on actual EEG signals (SI), extraction of supra-molecular features and pulse wave features from pre-processed EEG signals (S2). A primary detection outcome of brain abnormalities of the EEG signals by taking a qualified, randomized forest pattern on the basis of time domain and nonlinear characteristics extracted (S3). The secondary detection of outcome of brain abnormalities of the EEG signals based on the correlation between the pulse wave ratio from the extracted pulse wave features and a predefined threshold datasets (S4). The automatic detection of brain abnormalities can be obtained by fusing primary detection outcome and secondary detection of outcome (S5). The present invention also provides a .method to classify brain abnormalities by utilizing CNN computation technique, to isolate usable features of EEG signals from individual nodes and detect a type of brain abnormality based on the features of the EEG signals and the CNN computation. With the help of advanced computing techniques, the developed system improves detection and classification efficiency of the brain abnormalities.

No. of Pages : 12 No. of Claims : 4

(12) PATENT APPLICATION PUBLICATION
(21) Application No.202141030095 A
(19) INDIA
(22) Date of filing of Application :05/07/2021
(43) Publication Date : 16/07/2021

(54) Title of the invention : THE SMART AGROBOT

(51) International classification	:H04L0012580000, G06F0016350000, G06Q0050020000, G06K0009000000, G06F0040279000	(71)**Name of Applicant :** **1) Dr. S. GEETHA** Address of Applicant :SRI MANAKULA VINAYAGAR ENGINEERING COLLEGE, MADAGADIPET, PUDUCHERRY - 605107, INDIA. Pondicherry India
(31) Priority Document No	:NA	(72)**Name of Inventor :**
(32) Priority Date	:NA	**1) Dr. S. GEETHA**
(33) Name of priority country	:NA	**2)Dr. R. RAJU**
(86) International Application No	:NA	**3)Dr. J. MADHUSUDANAN**
Filing Date	:NA	**4)Dr. T. VIGNESWARI**
(87) International Publication No	: NA	**5)Dr. PUNITHA DEVI**
(61) Patent of Addition to Application Number	:NA	**6)Dr. G. SHANMUGASUNDARAM**
Filing Date	:NA	**7)Dr. S. BALAJI**
(62) Divisional to Application Number	:NA	**8)Mr. R. SARAVANAN**
Filing Date	:NA	**9)Mrs. N. KALAISELVI**
		10)Dr. A. SWAMINATHAN
		11)Mr. R. SURESH
		12)Dr. N. VIJAYA

(57) Abstract :
In India, agriculture plays an indispensable role to upgrade the economy. The most important problem prevailing among the Indian farmers is the difficulty of choosing the right crop according to the specific region. This bot provides a complete solution which benefits (he farmers to increase their productivity. Various algorithms have been analyzed and the best method that suits various purposes are discussed. The proposed bot is platform independent as it supports its functionality in a multi-operating system. This is being implemented using Natural Language Processing (NLP) for text classification and yoloVj for object detection. The Farm"s Smart BOT provides a complete solution of conversational system along with the integration of various predicting modules like Crop detection, Soil detection, Crop disease detection, suggestions about crop rotation and Weather forecasting.

No. of Pages : 8 No. of Claims : 6

(12) PATENT APPLICATION PUBLICATION
(21) Application No.202141030129 A
(19) INDIA
(22) Date of filing of Application :05/07/2021
(43) Publication Date : 16/07/2021

(54) Title of the invention : AUTOMATED COHERENT SUBMODULE FAULT SUPERVISION SYSTEMFOR MODULAR MULTILEVEL CONVERTER (MMC)

(51) International classification	:G06F0011160000, H02M0007483000, H02M0007490000, G01R0031327000, H04B0001740000	(71)**Name of Applicant :** **1)Sujo Oommen** Address of Applicant :Research Scholar & Assistant Professor, School of Electrical and Electronics Engineering, REVA University, Rukmini Knowledge Park, Kattigenahalli, Yelahanka, Bengaluru, Karnataka 560064, India Karnataka India **2)Dr. B P Divakar**
(31) Priority Document No	:NA	
(32) Priority Date	:NA	
(33) Name of priority country	:NA	
(86) International Application No	:NA	
Filing Date	:NA	
(87) International Publication No	: NA	
(61) Patent of Addition to Application Number	:NA	
Filing Date	:NA	
(62) Divisional to Application Number	:NA	
Filing Date	:NA	

(72)**Name of Inventor :**
1)Sujo Oommen
2)Dr. B P Divakar

(57) Abstract :
.ABSTRACT Modular multilevel converters (MMC) are more popular for high voltage and power applications such as electric drives due to their modular concept, high efficiency, scalability, redundancy and quality of output power. The structure and construction of the MMC must be tolerant to the faults emerge due to operational constraints, modules failure, internal device failures and need to be supplied with required power without interruption under fault condition. Various fault tolerant controls strategies have been proposed which suffer from certain limitations such as prolonged fault detection time, increased redundancy techniques, driving current anomalies of power semiconductor devices etc. The fault detection time being dependent on the types of faults and the MMC under consideration if brought down under reliable operation. Having detected the fault, locate and isolation of the fault will be the next cause of actions in this process. The strategies to mitigate the faults detected and make MMCs to be operating continuously without the interruption of power to the load is the need of an hour. Though there appears to be significant amount of development to improve the reliability, efficiency of MMCs, but still, plenty of room to improve the performance of MMCs with novel modulation, control strategies along with integrated fault diagnosis mechanism. Thus, an automated coherent submodule fault diagnosis method provides the less time to diagnose and recover the fault. In addition to that, it will reconfigure the switching pattern according to that by including the redundant modules to maintain the same level voltage and power ratings for MMC system to be operating continuously without the interruption of power to the load.

No. of Pages : 11 No. of Claims : 4

(12) PATENT APPLICATION PUBLICATION
(21) Application No.202141030130 A
(19) INDIA
(22) Date of filing of Application :05/07/2021
(43) Publication Date : 16/07/2021

(54) Title of the invention : A METHOD FOR REPELLING WATER FROM HYDROPHOBIC SOIL

(51) International classification	:C09K0017320000, G01N0033240000, C05F0011020000, A01N0043160000, C12Q0001683700
(31) Priority Document No	:NA
(32) Priority Date	:NA
(33) Name of priority country	:NA
(86) International Application No	:NA
Filing Date	:NA
(87) International Publication No	: NA
(61) Patent of Addition to Application Number	:NA
Filing Date	:NA
(62) Divisional to Application Number	:NA
Filing Date	:NA

(71)**Name of Applicant :**
1)Dr. R Arivazhagan
Address of Applicant :S/o. P RENGASAMY, No. A3 R.E. APARTMENTS, KRISHNAPURAM STREET, CHOOLAIMEDU, CHENNAI 600094, TAMIL NADU, INDIA. Tamil Nadu India
2)Dr. N K Rajan
3)N R Mythreyi
4)Dr. S Sridhar
5)V Kishor Kumar
6)M Sivaraj
(72)**Name of Inventor :**
1)Dr. R Arivazhagan
2)Dr. N K Rajan
3)N R Mythreyi
4)Dr. S Sridhar
5)V Kishor Kumar
6)M Sivaraj

(57) Abstract :
Organic compounds released during various manmade processes into the soil have made soil hydrophobic and water repellent. The organic coatings may be due to waxes, lignin, plant root exudates, fungal components and other volatile organic matter that pack onto the soil. Surface water repellency (SWR) is phenomenon were the soil fails to respond when a drop of water is applied over its surface. Soils with a small surface area (e.g. sand) are more prone to water repellency as it takes less hydrophobic material to coat individual particles, compared to silt or clay. This soil creates more runoff and is sensitive to erosion hazard. Various methodologies including traditional to conventional methods are available, but each and every methodologies has their own limitations. An alternative to above mentioned approach is bio-based treatment using enzymatic cocktails.

No. of Pages : 15 No. of Claims : 3

(12) PATENT APPLICATION PUBLICATION
(21) Application No.202141030173 A
(19) INDIA
(22) Date of filing of Application :05/07/2021
(43) Publication Date : 16/07/2021

(54) Title of the invention : SYSTEM AND METHOD FOR MANAGING TARGETED EVENTS

(51) International classification	:H04N0021466000, G06Q0010060000, H04N0005445000, G06F0016600000, F24F0011300000
(31) Priority Document No	:NA
(32) Priority Date	:NA
(33) Name of priority country	:NA
(86) International Application No	:NA
Filing Date	:NA
(87) International Publication No	: NA
(61) Patent of Addition to Application Number	:NA
Filing Date	:NA
(62) Divisional to Application Number	:NA
Filing Date	:NA

(71)**Name of Applicant :**
1)STEVE NATHANIEL SAN
Address of Applicant :#410, SRI ADITYA NIVAS, 26/4, BHERESWARA LAYOUT, LAKE BED ROAD, K. CHANASANDRA, HORAMAVU, BANGALORE, 560043, KARNATAKA, INDIA Karnataka India
(72)**Name of Inventor :**
1)STEVE NATHANIEL SAN
2)DEEPAK SHANKARAPPA

(57) Abstract :
A system (100) for managing targeted events is disclosed. An event data collection module (110) collects one or more details of one or more events associated with a user. An event organization module (130) identifies the one or more events associated with the user forthcoming within a predefined interval, categorizes the one or more events identified into one or more event categories. An event reminder generation module (140) generates a customized reminder corresponding to each of the one or more event categories. An event planning module (150) creates at least one plan corresponding to each of the one or more event categories. A plan recommendation module (160) determines one or more preferences of the user associated with execution of the atleast one plan corresponding to each of the one or more event categories, generates one or more recommendations for execution of the at least one plan, suggests one or more relevant offers corresponding to the one or more recommendations. FIG. 1

No. of Pages : 28 No. of Claims : 10

(12) PATENT APPLICATION PUBLICATION
(21) Application No.202141030193 A
(19) INDIA
(22) Date of filing of Application :05/07/2021
(43) Publication Date : 16/07/2021

(54) Title of the invention : IOT AND CLOUD BASED DESIGN AND DEVELOPMENT OF SMART BUS MANAGEMENT SYSTEM

(51) International classification	:G06Q0050200000, G06Q0010080000, C12Q0001684400, C12Q0001681600, G01N0033490000
(31) Priority Document No	:NA
(32) Priority Date	:NA
(33) Name of priority country	:NA
(86) International Application No	:NA
Filing Date	:NA
(87) International Publication No	: NA
(61) Patent of Addition to Application Number	:NA
Filing Date	:NA
(62) Divisional to Application Number	:NA
Filing Date	:NA

(71)**Name of Applicant :**
1)Dr. ARUNKUMAR PANEERSELVAM
Address of Applicant :ASSISTANT PROFESSOR DEPARTMENT OF COMPUTER APPLICATIONS E.G.S PILLAY ENGINEERING COLLEGE(AUTONOMOUS) OLD NAGORE MAIN RD, THETHI VILLAGE, NAGORE, NAGAPATTINAM, TAMIL NADU 611002 Tamil Nadu India
2)Dr.BASANT KUMAR VERMA
3)Mr. PARVEEN KUMAR SHARMA
4)Dr. ASHISH K SHARMA
5)Dr. MEENAKSHI R
6)Mr. SACHIN PRABHA
7)Mr. PRASHANTH KUMAR K
8)Mr. SANDEEP SRIVASTAVA
9)Dr. HARISH KUNDRA
10)Mr. KAPIL KUSHWAHA
(72)**Name of Inventor :**
1)Dr. ARUNKUMAR PANEERSELVAM
2)Dr.BASANT KUMAR VERMA
3)Mr. PARVEEN KUMAR SHARMA
4)Dr. ASHISH K SHARMA
5)Dr. MEENAKSHI R
6)Mr. SACHIN PRABHA
7)Mr. PRASHANTH KUMAR K
8)Mr. SANDEEP SRIVASTAVA
9)Dr. HARISH KUNDRA
10)Mr. KAPIL KUSHWAHA

(57) Abstract :
ABSTRACT IOT AND CLOUD BASED DESIGN AND DEVELOPMENT OF SMART BUS MANAGEMENT SYSTEM The proposed framework helps in following the school or college transport where it is accessible and furthermore tracking down the quantity of understudies utilizing the school transport. This aides in giving the security to the school transport understudies and furthermore helps the school the executives to think about the school transport subtleties whenever, at anyplace. The understudy is if paid their school expense can likewise be checked by our proposed framework. This aides in discovering the unapproved clients of the school transport. If there should arise an occurrence of public vehicles it demonstrates low adjusted cards. School or college transports are utilized by undergrads who are paying the transport charge. Now and again, the understudies who are not paid their transport expense can likewise utilize the school transports. To keep away from these sort of circumstance, and to guarantee the understudies utilizing school or college transport are whether paid their transport expense with the area of the school or college transport is distinguished which can be followed by the understudies and school the executives. The quantity of understudies utilizing the specific school or college transport can likewise be recognized. The area is shipped off the cloud so the transports are followed by versatile application. The RFID labels are filtered when the understudies went into the school or college transport, if the understudies paid their charge they can go into the transport, else they are not permitted into the school transport and the insinuation is shipped off the driver and furthermore to the parent. The understudies utilizing the specific transport can be tallied by the quantity of RFID labels present inside the school or college transport.

No. of Pages : 21 No. of Claims : 8

(12) PATENT APPLICATION PUBLICATION
(21) Application No.202141030198 A
(19) INDIA
(22) Date of filing of Application :05/07/2021
(43) Publication Date : 16/07/2021

(54) Title of the invention : GENERATION OF REFERENCE CURRENT USING SINGLE-PHASE SOURCELOAD SYSTEM BASED CONTROL ALGORITHM FOR DSTATCOM

(51) International classification	:H02J0003010000, H02J0003180000, H02P0009140000, H02J0003120000, H02M0005270000
(31) Priority Document No	:NA
(32) Priority Date	:NA
(33) Name of priority country	:NA
(86) International Application No	:NA
Filing Date	:NA
(87) International Publication No	: NA
(61) Patent of Addition to Application Number	:NA
Filing Date	:NA
(62) Divisional to Application Number	:NA
Filing Date	:NA

(71)**Name of Applicant :**
1)Dr. J.RAMESH
Address of Applicant :Associate Professor, Department of Electrical and Electronics Engineering, Velagapudi Ramakrishna Siddhartha Engineering College, Kanuru, Vijayawada-520007 Andhra Pradesh India
2)Dr. T. ARULDOSS ALBERT VICTOIRE
3)Dr.M.SUDHAKARAN
4)Dr.P.CHANDRA BABU NAIDU
5)Dr. KUMAR CHERUKUPALLI
6)Mr.SUNEEL TUMMAPUDI
(72)**Name of Inventor :**
1)Dr. J.RAMESH
2)Dr. T. ARULDOSS ALBERT VICTOIRE
3)Dr.M.SUDHAKARAN
4)Dr.P.CHANDRA BABU NAIDU
5)Dr. KUMAR CHERUKUPALLI
6)Mr.SUNEEL TUMMAPUDI

(57) Abstract :
This proposed invention focuses on implementing a stiffly-sourced power distribution system of the differential equation of the source-load system-based 3-phase distribution static compensator (DSTATCOM) control method. The DSTATCOM is designed to alleviate the power quality problems produced by solid-state devices, such as unbalanced loads, reactive power, and current harmonics. The management of the polluted load currents is utilized for the estimate of reference source currents for the extraction of the primary active and reactive current components. A sliding sample window with a width of half the primary cyclone may be used for calculating the control algorithm. The main benefits of this control method are immune to noise, which DC components cannot impact in load current and fewer frequency variations.

No. of Pages : 22 No. of Claims : 5

(12) PATENT APPLICATION PUBLICATION
(19) INDIA
(22) Date of filing of Application :05/07/2021

(21) Application No.202141030202 A
(43) Publication Date : 16/07/2021

(54) Title of the invention : IOT BASED SMART WEARABLE SUIT FOR SELF HEALTH ASSESSMENT IN POST COVID ERA

(51) International classification :G16H0040630000, A61B0005000000, G08B0021040000, G06Q0050220000, G16H0050700000
(31) Priority Document No :NA
(32) Priority Date :NA
(33) Name of priority country :NA
(86) International Application No :PCT//
Filing Date :01/01/1900
(87) International Publication No : NA
(61) Patent of Addition to Application Number :NA
Filing Date :NA
(62) Divisional to Application Number :NA
Filing Date :NA

(71)**Name of Applicant :**
1)Dr.Shermin Shamsudheen,Jazan University
Address of Applicant :College of Computer Science and Information Technology, Jazan University - Jazan - Kingdom of Saudi Arabia Saudi Arabia
2)Dr.Bhubaneswari Bisoyi,Sri Sri University
3)Dr Rajesh Agarwal,SRM IST
4)Dr.SR.Mary Fabiola,Nirmala College for Women
5)Dr. P. Dhivya,Nirmala College for Women
6)Dr.Saahira banu Ahamed,Jazan University
7)Dr. Aman Dahiya,Maharaja Surajmal Institute of Technology
8)Dr Chandra Kumar dixit,Dr Shakuntala Misra National Rehabilitation University
9)Dr.Sumanta Bhattacharya,Maulana Abdul Kalam Azad University of Technology
10)Mr.Nanda kumar,National Institute of fashion technology
11)Mahesh Kumar K M,PES College of Engineering
12)Dr.M.Parimala Devi,Velalar College of Engineering and Technology
(72)**Name of Inventor :**
1)Dr.Shermin Shamsudheen,Jazan University
2)Dr.Bhubaneswari Bisoyi,Sri Sri University
3)Dr Rajesh Agarwal,SRM IST
4)Dr.SR.Mary Fabiola,Nirmala College for Women
5)Dr. P. Dhivya,Nirmala College for Women
6)Dr.Saahira banu Ahamed,Jazan University
7)Dr. Aman Dahiya,Maharaja Surajmal Institute of Technology
8)Dr Chandra Kumar dixit,Dr Shakuntala Misra National Rehabilitation University
9)Dr.Sumanta Bhattacharya,Maulana Abdul Kalam Azad University of Technology
10)Mr.Nanda kumar,National Institute of fashion technology
11)Mahesh Kumar K M,PES College of Engineering
12)Dr.M.Parimala Devi,Velalar College of Engineering and Technology

(57) Abstract :
Rapid growth of population along with their aging has led to major issue as health care of elders throughout the world. Technology plays significant role in improving the quality of care service along with decreased manpower burden at low cost. Several entrepreneurs from health care industry have started seeking the assistance of technology for solving the issue of elderly care. This invention proposes IoT (Internet of Things) based health care system using wearable devices for generating notification of any abnormalities. Physiological parameters are recorded by wearable devices such as body tag, smart clothes and health watch which collect raw data which is then updated to the database for generating the personal report of elder™s health analysis. If any abnormal value above the threshold, then the care notification system generates alerts and sent to care takers of the elders. Health management of elders with high blood sugar and high pressure becomes feasible by this invention as the care takers are able to get regular notifications about the condition of the elders at low cost with higher accuracy compared to conventional systems.

No. of Pages : 11 No. of Claims : 6

(12) PATENT APPLICATION PUBLICATION
(19) INDIA
(22) Date of filing of Application :06/07/2021
(21) Application No.202141030217 A
(43) Publication Date : 16/07/2021

(54) Title of the invention : SEMI-TRIANGULAR HEAD BACTERIOLOGICAL INOCULATION LOOP

(51) International classification	:C12M0001300000, C12M0001000000, A01G0018000000, C12Q0001040000, C12M0003000000
(31) Priority Document No	:NA
(32) Priority Date	:NA
(33) Name of priority country	:NA
(86) International Application No	:NA
Filing Date	:NA
(87) International Publication No	: NA
(61) Patent of Addition to Application Number	:NA
Filing Date	:NA
(62) Divisional to Application Number	:NA
Filing Date	:NA

(71)**Name of Applicant :**
1) SAVEETHA DENTAL COLLEGE AND HOSPITALS, SAVEETHA INSTITUTE OF MEDICAL AND TECHNICAL SCIENCES, SAVEETHA UNIVERSITY
Address of Applicant : SAVEETHA DENTAL COLLEGE AND HOSPITALS, NO.162, PH ROAD, VELAPPANCHAVADI, CHENNAI, TAMIL NADU, INDIA-77. Tamil Nadu India
(72)**Name of Inventor :**
1) A.S. SMILINE GIRIJA
2)P. SANKAR GANESH
3)J. VIJAYASHREE PRIYADHARSINI
4)DEEPAK NALLASWAMY VEERAIYAN

(57) Abstract :
The semi-triangular bacteriological inoculation loop is an invention related to a microbiology laboratory tool under the category of the inoculation loops used in the cultivation methods and for further observations of bacteria and fungi. The tool can be considered as a 3-in-l model serving three different purpose as a bacteriological loop, a swab and as a straight wire. The tool has its own specifications in its design as described to implement the applications and to be efficiently applied for the microbiological processing of bacteria and fungi.

No. of Pages : 11 No. of Claims : 6

(12) PATENT APPLICATION PUBLICATION
(21) Application No.202141030218 A
(19) INDIA
(22) Date of filing of Application :06/07/2021
(43) Publication Date : 16/07/2021

(54) Title of the invention : SUPERPARAMAGNETIC TITANIUM OXIDE NANOPARTICLES (SPTON) GREEN SYNTHESIZED WITH ANDROGRAPHIS PANIC

(51) International classification	:A61L0027060000, A61K0049180000, A61L0027540000, H01F0001000000, A61L0027500000
(31) Priority Document No	:NA
(32) Priority Date	:NA
(33) Name of priority country	:NA
(86) International Application No	:NA
Filing Date	:NA
(87) International Publication No	: NA
(61) Patent of Addition to Application Number	:NA
Filing Date	:NA
(62) Divisional to Application Number	:NA
Filing Date	:NA

(71)**Name of Applicant :**
1) SAVEETHA INSTITUTE OF MEDICAL AND TECHNICAL SCIENCES, SAVEETHA DENTAL COLLEGE, SAVEETHA UNIVERSITY
Address of Applicant : 162, POONAMALLE HIGH ROAD CHENNAI, TAMIL NADU, INDIA- 600077 Tamil Nadu India
(72)**Name of Inventor :**
1) DHANRAJ GANAPATHY
2)RAMYA RAMADOSS
3)RAJESHKUMAR SHANMUGAN
4)DEEPAK NALLASWAMY
5)THIYANESWARAN
6)J. MARTINA CATHERINE

(57) Abstract :
Implant failure is implant loss that requires removal of the implant. Reasons for implant failure can be divided into biological, mechanical, and iatrogenic failure as well as inadequate patient adaption. Common complications leading to implant failure is due to lack of adequate osseointegration in the initial stages and bacterial biofilm formation at later stages. Despite existence of about 1300 implant designs, implant failures are still inevitable till date. Challenges in terms of presence of co-morbidities like diabetes mellitus, osteoporosis, bisphosphonate therapy, radiotherapy are yet to be overcome. Considering the significant increase in elderly population over the last few decades, management of co-morbidities are crucial in implant related functional restoration.This invention focusses on surface modifications in implant with covalently conjugated Bone morphogenic protein and Superparamagnetic titanium oxide nanoparticles (SPTON) green synthesized with Andrographispaniculatacoating on to a metal titanium substrate. Accordingly, one aspect of the present invention provides a system to conjugate the growth factor on the nanoparticle. It has been observed that Andrographispaniculata has several phytochemicals like alkaloids carbohydrates, cardiac glycosides, coumarins, flavonoids, phenols, quinones, phytosterols, tannins and terpenoids were present in the extracts .Hence, using Andrographispaniculata to green synthesize nano particles can effectively enhance the physiochemical and biological behaviour of Super paramagnetic titanium oxide nano particles. Further aspect of the invention is to coat the Bone morphogenic protein conjugated green synthesized Super paramagnetic titaniumoxide nanoparticle on to the titanium implant surface. Prepared particles will be compounded with polyvinylidene fluoride and coated to titanium implants.Another object of the invention is to provide a method to create a Bone morphogenic protein conjugated green synthesized Super paramagnetic titanium oxide nanoparticle coated implant. Recombinant human BMP will be procured. Dextran coating will be done on the magnetic nanoparticles . This would be further cross-linked with epichlorohydrin and aminated. Magnetic nanoparticles will be suspended in a phosphate buffered solution of BMP. The conjugation reaction will be carried out at 20°C with shaking for 1 hour. Soluble carbodiimide dextran will be activated by water and coupled to the carboxyl groups of BMP, producing a magnetic conjugate. The amino-functionalized bone morphogenic protein conjugated green synthesized Super paramagnetic titanium oxide nanoparticle on to the titanium implant surface. -NH2 groups bond with TiC>2 ions.

No. of Pages : 12 No. of Claims : 3

(12) PATENT APPLICATION PUBLICATION
(19) INDIA
(22) Date of filing of Application :06/07/2021

(21) Application No.202141030219 A
(43) Publication Date : 16/07/2021

(54) Title of the invention : BIOFILM MATRIX COVER SLIP HOLDER

(51) International classification	:G02B0021340000, G01N0001310000, C12N0015100000, A61K0038400000, G03F0009000000
(31) Priority Document No	:NA
(32) Priority Date	:NA
(33) Name of priority country	:NA
(86) International Application No	:NA
Filing Date	:NA
(87) International Publication No	: NA
(61) Patent of Addition to Application Number	:NA
Filing Date	:NA
(62) Divisional to Application Number	:NA
Filing Date	:NA

(71)**Name of Applicant :**
1)SAVEETHA DENTAL COLLEGE AND HOSPITALS, SAVEETHA INSTITUTE OF MEDICAL AND TECHNICAL SCIENCES, SAVEETHA UNIVERSITY
Address of Applicant : SAVEETHA DENTAL COLLEGE AND HOSPITALS, NO.162, PH ROAD, VELAPPANCHAVADI, CHENNAI, TAMIL NADU, INDIA-77. patents.sdc@saveetha.com Tamil Nadu India
(72)**Name of Inventor :**
1) P. SANKAR GANESH
2)A.S. SMILINE GIRIJA
3)J. VIJAYASHREE PRIYADHARSINI
4) DEEPAK NALLASWAMY VEERAIYAN

(57) Abstract :
Biofilms are conglomerate of microbes enclosed in a self-secreted exopolysaccharide that hold microbial cells together onto the surface of host cells and environs the bacterial population. The proposed invention, in particular, relates to a laboratory tool used for in-vitro biofilm imaging studies. The coverslip holder can accommodate three coverslips into the biofilm matrix holder at a time, and biofilm imaging can be performed on all the coverslips, simultaneously. The function of the holder is to hold the coverslips firmly when the biofilm is developing. The main advantage of the holder can be placed on 90 mm and 100 mm petriplates. The holder reduces handling error necessitating better imaging of both treated and control biofilms.

No. of Pages : 13 No. of Claims : 9

(12) PATENT APPLICATION PUBLICATION
(19) INDIA
(22) Date of filing of Application :06/07/2021
(21) Application No.202141030222 A
(43) Publication Date : 16/07/2021

(54) Title of the invention : MANUAL FORCEPS USED FOR EXTRACTION OF ROOT STUMPS

(51) International classification :A61Q0011000000, A61K0008190000, A61C0005400000, A61C0005500000, A61C0005420000
(31) Priority Document No :NA
(32) Priority Date :NA
(33) Name of priority country :NA
(86) International Application No :NA
Filing Date :NA
(87) International Publication No : NA
(61) Patent of Addition to Application Number :NA
Filing Date :NA
(62) Divisional to Application Number :NA
Filing Date :NA

(71)**Name of Applicant :**
1)SAVEETHA DENTAL COLLEGE AND HOSPITALS, SAVEETHA INSTITUTE OF MEDICAL AND TECHNICAL SCIENCES, SAVEETHA UNIVERSITY
Address of Applicant :SAVEETHA DENTAL COLLEGE AND HOSPITALS, NO 162, PH ROAD, VELAPPANCHAVADI, CHENNAI, TAMIL NADU, INDIA 600077. Tamil Nadu India
(72)**Name of Inventor :**
1)P.KESHAAV KRISHNAA
2)ARUN MURUGAIYAN
3)DEEPAK NALLASWAMY VEERAIYAN

(57) Abstract :
(1) A single instrument that can be used for extraction of root stumps that extracts the root through engaging with the dentinal tubules through the root canal system (2) A manual non engine driven instrument which can primarily be used for extraction of root stumps seen in the oral cavity

No. of Pages : 7 No. of Claims : 6

(12) PATENT APPLICATION PUBLICATION
(21) Application No.202141030224 A
(19) INDIA
(22) Date of filing of Application :06/07/2021
(43) Publication Date : 16/07/2021

(54) Title of the invention : CROWN REMOVING PLIER FOR STAINLESS STEEL CROWN

(51) International classification	:A61C0005770000, A61C0005700000, A61C0003160000, B67B0007160000, B25B0007020000
(31) Priority Document No	:NA
(32) Priority Date	:NA
(33) Name of priority country	:NA
(86) International Application No	:NA
Filing Date	:NA
(87) International Publication No	: NA
(61) Patent of Addition to Application Number	:NA
Filing Date	:NA
(62) Divisional to Application Number	:NA
Filing Date	:NA

(71)**Name of Applicant :**
1)SAVEETHA INSTITUTE OF MEDICAL AND TECHNICAL SCIENCES, SAVEETHA DENTAL COLLEGE, SAVEETHA UNIVERSITY
Address of Applicant :NO 162, POONAMALLEE HIGH ROAD, CHENNAI, TAMIL NADU, INDIA 600077. Tamil Nadu India
(72)**Name of Inventor :**
1)JANVI M GANDHI
2)VIGNESH.R
3)DEEPAK NALLASWAMY VEERAIYAN

(57) Abstract :
ABSTRACT- This design is proposed to patent a crown removing plier exclusively for stainless steel crowns used in Pediatric dentistry. This proposed design has two ends, one end is shaped like a spoon excavator and the other end has an elbow bend which has a rubber cup at it's tip. The spoon excavator end is used to engage the buccal/ lingual surface to tilt and remove the crown. Whereas the other end, which has the rubber cup engages the other surface (lingual if the other end is engaged in buccal surface), which acts as a fulcrum and helps in easier removal of the crown from the other end without damaging the crown. It is designed in such a way that it can be used for both and for maxillary or mandibular crown removal in primary and permanent teeth. This plier saves time of the operator and prevents usage of other hand instruments like spoon excavator, which is being used commonly for removal of crowns which may sometimes bend while using it for crown removal purposes. It is made up of stainless steel and weighs 500grams.

No. of Pages : 7 No. of Claims : 5

(12) PATENT APPLICATION PUBLICATION
(19) INDIA
(22) Date of filing of Application :06/07/2021
(21) Application No.202141030225 A
(43) Publication Date : 16/07/2021

(54) Title of the invention : TISSUE HOMOGENIZER WITH INTERCHANGEABLE SHAFT PESTLE

(51) International classification	:A61B0090000000, B01F0013000000, A63B0053020000, B25F0005000000, G02B0027090000
(31) Priority Document No	:NA
(32) Priority Date	:NA
(33) Name of priority country	:NA
(86) International Application No	:NA
Filing Date	:NA
(87) International Publication No	: NA
(61) Patent of Addition to Application Number	:NA
Filing Date	:NA
(62) Divisional to Application Number	:NA
Filing Date	:NA

(71)**Name of Applicant :**
1)SAVEETHA DENTAL COLLEGE HOSPITALS, SAVEETHA INSTITUTE OF MEDICAL AND TECHNICAL SCIENCES, SAVEETHA UNIVERSITY
Address of Applicant :SAVEETHA DENTAL COLLEGE AND HOSPITALS, NO 162, PH ROAD, VELAPPANCHAVADI, CHENNAI, TAMIL NADU, INDIA 600077. Tamil Nadu India
(72)**Name of Inventor :**
1)J.VIJAYASHREE PRIYADHARSINI
2)A.S.SMILINE GIRIJA
3)P . SANKAR GANESH
4)A.PARAMASIVAM
5)DEEPAK NALLASWAMY VEERAIYAN

(57) Abstract :
ABSTRACT OF THE INVENTION A tissue homogenizer a novel invention which provides a simple solution with a hand-held, battery operated, sleek and cost-effective instrument with interchangeable shaft pestle designed to suit the needs. The advantages of the instrument is the sleek look and that it does not require much of storage space. The equipment prevents formation of aerosols and splashing of liquids providing a safe envionment to the researcher.

No. of Pages : 9 No. of Claims : 6

(12) PATENT APPLICATION PUBLICATION
(21) Application No.202141030226 A
(19) INDIA
(22) Date of filing of Application :06/07/2021
(43) Publication Date : 16/07/2021

(54) Title of the invention : NASAL PODS FOR NITROUS OXIDE SEDATION

(51) International classification	:A61K0009000000, B65D0043160000, A61M0016060000, C07D0417140000, B01D0053860000
(31) Priority Document No	:NA
(32) Priority Date	:NA
(33) Name of priority country	:NA
(86) International Application No	:NA
Filing Date	:NA
(87) International Publication No	: NA
(61) Patent of Addition to Application Number	:NA
Filing Date	:NA
(62) Divisional to Application Number	:NA
Filing Date	:NA

(71)**Name of Applicant :**
1) SAVEETHA INSTITUTE OF MEDICAL AND TECHNICAL SCIENCES, SAVEETHA DENTAL COLLEGE, SAVEETHA UNIVERSITY
Address of Applicant :NO 162, POONAMALLEE HIGH ROAD, CHENNAI, TAMIL NADU, INDIA 600077. Tamil Nadu India
(72)**Name of Inventor :**
1)JANIANI PALAK RAMESH
2)VIGNESH.R
3)DEEPAK NALLASWAMY VEERAIYAN

(57) Abstract :
Abstract Nasal hoods are currently being used for nitrous oxide-oxygen sedation. A novel nitrous oxide-oxygen delivery technique is necessary due to the drawbacks of existing nasal hoods, the most significant of which is inadequate patient (especially paediatric) acceptance. These silicon nasal pods are intended to address all of the issues with nasal hoods. These pods are ideal for children because of their simple design and disposable nature; patient acceptability will improve, and cross-infectivity risks will be reduced. To ensure no leakage of gases into the dental environment, a safety mechanism in the form of an additional silicon piece is added to the design of these nasal pods.

No. of Pages : 7 No. of Claims : 3

(12) PATENT APPLICATION PUBLICATION
(21) Application No.202141030227 A
(19) INDIA
(22) Date of filing of Application :06/07/2021
(43) Publication Date : 16/07/2021

(54) Title of the invention : METHOD AND SYSTEM FOR ANALYZING MAGNETIC RESONANCE IMAGES

(51) International classification	:A61B0005000000, G06T0007110000, G06T0007000000, G06T0005000000, G06K0009000000
(31) Priority Document No	:NA
(32) Priority Date	:NA
(33) Name of priority country	:NA
(86) International Application No	:NA
Filing Date	:NA
(87) International Publication No	: NA
(61) Patent of Addition to Application Number	:NA
Filing Date	:NA
(62) Divisional to Application Number	:NA
Filing Date	:NA

(71)**Name of Applicant :**
1)P.M. Siva Raja
Address of Applicant :Assistant Professor, Amrita College of Engineering and Technology, Nagercoil ,Tamil Nadu,India, Tamil Nadu India
2)K Ramanan
(72)**Name of Inventor :**
1)P.M. Siva Raja
2)K Ramanan

(57) Abstract :
Embodiments of the present disclosure provide a system for analyzing Magnetic Resonance Images of the subject from at least one MR image associated with a cranium of said subject. The system includes an image processing unit (200) to obtain a plurality of MR images from at least one MR image source, generate at least one de-noised MR image by extracting a noise from said at least one MR image, segment said at least one de-noised MR image using BFC for identifying a core and edema regions in said at least one de-noised MR image and extract features from said core and edema regions of said at least one segmented de-noised MR image using an image feature extraction mechanism comprising information theoretic measures, wavelet packet Tsallis entropy and scattering transform, and a tumour classification unit (300) to classify said brain tumour based on said at least one extracted feature.

No. of Pages : 30 No. of Claims : 10

(12) PATENT APPLICATION PUBLICATION
(21) Application No.202141030230 A
(19) INDIA
(22) Date of filing of Application :06/07/2021
(43) Publication Date : 16/07/2021

(54) Title of the invention : DESIGN AND IMPLEMENTATION OF FAST CHARGING SYSTEM FOR ELECTRICAL VEHICLE

(51) International classification	:B60L0053630000, B60L0053300000, B60L0053140000, H02M0003335000, H02M0007797000
(31) Priority Document No	:NA
(32) Priority Date	:NA
(33) Name of priority country	:NA
(86) International Application No	:NA
Filing Date	:NA
(87) International Publication No	: NA
(61) Patent of Addition to Application Number	:NA
Filing Date	:NA
(62) Divisional to Application Number	:NA
Filing Date	:NA

(71)**Name of Applicant :**
1)Prof. Saahithi S
Address of Applicant :Prof. Saahithi S Assistant Professor, School of Electrical and Electronics Engineering, REVA University, Rukmini Knowledge Park, Kattigenahalli, Yelahanka, Bengaluru, Karnataka 560064, India Karnataka India
2)Kavya K
3)Kishore R
4)Manasa R
5)Nagesh
(72)**Name of Inventor :**
1)Prof. Saahithi S
2)Kavya K
3)Kishore R
4)Manasa R
5)Nagesh

(57) Abstract :
ABSTRACT Most of the dc-dc converters are designed for power-flow in only one direction from dedicated input to the output. Whereas, bidirectional dc-dc converters are used for the power flow in either the direction. The bidirectional dual input single output converter is designed for solar PV along with the utility grid to charge the battery of electric vehicle with the bidirectional power flow. Compared to the conventional converter, BDISO dc-dc converter uses semiconductor switches, one inductor and one capacitor. The maximum efficiency of BDISO is 90% comparing with dc-dc converter. This dc-dc converter having less number of components with greater efficiency. The maximum efficiency of BDISO is 90% comparing with dc-dc converter. The proposed work is non-isolated bi-directional dual input with single output dc-dc converter for vehicle charging application. The designed converter would prove to be an efficient solution for the charging for EVs and help the expansion of EVs in the world. The proposed work is a non-isolated bi-directional dual input with single output dc-dc converter for vehicle charging application. Design of this converter is for utilizing both solar Photo-Voltaic along with utility grid for charging the battery of electrical vehicle with the bi-directional power-flow capacity. This project presents the design and implementation of BDISO Converters, its prototype, loss breakdown analysis and calculations of dc-dc converter.

No. of Pages : 12 No. of Claims : 4

(12) PATENT APPLICATION PUBLICATION
(19) INDIA
(22) Date of filing of Application :06/07/2021
(21) Application No.202141030236 A
(43) Publication Date : 16/07/2021

(54) Title of the invention : INSTANT KANJI MIX

(51) International classification	:A61K0036480000, A23L0007196000, A23C0019086000, A23L0033220000, B41J0003010000
(31) Priority Document No	:NA
(32) Priority Date	:NA
(33) Name of priority country	:NA
(86) International Application No	:NA
Filing Date	:NA
(87) International Publication No	: NA
(61) Patent of Addition to Application Number	:NA
Filing Date	:NA
(62) Divisional to Application Number	:NA
Filing Date	:NA

(71)**Name of Applicant :**
1)MANJILAS FOOD TECH PRIVATE LIMITED
Address of Applicant :TC-16-1382, SASTHRI ROAD, NELLIKKUNNU, THRISSUR-5, KERALA, INDIA. Kerala India
(72)**Name of Inventor :**
1)VINOD MANJILA

(57) Abstract :
ABSTRACT INSTANT KANJI MIX The present invention relates to an instant kanji mix, particularly Instant Matta Rice Kanji Mix that can be reconstituted for just 5 minutes before consumption. The instant kanji mix is ready, highly nutritious and convenient to use, having a prolonged shelf life of up to 3 months. In one aspect, the instant sweet delicacy is prepared from a nutritional blend of rice, green gram, fenugreek, chilly, salt and grated coconut.

No. of Pages : 18 No. of Claims : 20

(12) PATENT APPLICATION PUBLICATION
(21) Application No.202141030245 A
(19) INDIA
(22) Date of filing of Application :06/07/2021
(43) Publication Date : 16/07/2021

(54) Title of the invention : PROCESS OF PLASTIC WASTE FOR PRODUCTS OF BUILDING MATERIALS WITH PLASTIC EXTRUSION METHOD

(51) International classification	:C10G0001100000, B29B0017000000, C10B0053070000, E01C0005220000, C04B0026000000
(31) Priority Document No	:NA
(32) Priority Date	:NA
(33) Name of priority country	:NA
(86) International Application No	:NA
Filing Date	:NA
(87) International Publication No	: NA
(61) Patent of Addition to Application Number	:NA
Filing Date	:NA
(62) Divisional to Application Number	:NA
Filing Date	:NA

(71)**Name of Applicant :**
1)MD.Misbahuddin, Assistant Professor / Department of Mechanical Engineering, Lords Institute of Engineering & Technology.
Address of Applicant :Lords Institute of Engineering & Technology, Himayath sagar, Hyderabad, Telangana-500091. Telangana India
2)Shaik Khasim Sharif, Assistant Professor / Department of Mechanical Engineering, CMR Technical Campus.
3)Dr.Tagallamudi Srinivasa Rao, Associate Professor/ Department of Mathematics, Koneru Lakshmaiah Education Foundation
4)S. Phani Kumar, Assistant Professor /Department of Mechanical Engineering, Anil Neerukonda Institute of Technology and Sciences
5)Chandrashekhar M Bagade, Assistant Professor / Department of Mechanical Engineering, Kshyatriya College of Engineering
6)Mubeen Shaikh, Assistant Professor / Department of Mechanical Engineering, Kshyatriya College of Engineering.
7)Mohammed Asif Kattimani, Assistant Professor / Department of Mechanical Engineering, Lords Institute of Engineering & Technology
8)T.Paramesh, Research Scholar/ Department of Mechanical Engineering, University College of Engineering, Osmania University
(72)**Name of Inventor :**
1)MD.Misbahuddin, Assistant Professor / Department of Mechanical Engineering, Lords Institute of Engineering & Technology.
2)Shaik Khasim Sharif, Assistant Professor / Department of Mechanical Engineering, CMR Technical Campus.
3)Dr.Tagallamudi Srinivasa Rao, Associate Professor/ Department of Mathematics, Koneru Lakshmaiah Education Foundation
4)S. Phani Kumar, Assistant Professor /Department of Mechanical Engineering, Anil Neerukonda Institute of Technology and Sciences
5)Chandrashekhar M Bagade, Assistant Professor / Department of Mechanical Engineering, Kshyatriya College of Engineering
6)Mubeen Shaikh, Assistant Professor / Department of Mechanical Engineering, Kshyatriya College of Engineering.
7)Mohammed Asif Kattimani, Assistant Professor / Department of Mechanical Engineering, Lords Institute of Engineering & Technology
8)T.Paramesh, Research Scholar/ Department of Mechanical Engineering, University College of Engineering, Osmania University

(57) Abstract :
Abstract The core objective of this present effort is to moderate the plastic waste in the human domain and a system that integrates a plastic extruder, which makes use of the recycling process for waste plastics. This uses waste plastics and transforms with an extruder to constructing materials to reduce plastic waste, which is an essential factor in the environment. Currently, waste plastics are transformed into suitable construction materials a like blocks, paving slabs, meshes, tiles, railway sleepers, and absorbent blocks consuming either plastic waste material or a combination of dissimilar plastic wastes beside with leftover rubber powder as packing. Many studies with the range of plastic litters were extracted into the plastic brick, it witnessed, Polypropylene composite brick has a maximum compressive load of 17.96 tons, followed by 16.95 tons Rubber composite brick that is significantly more heavily loaded than the just 9.56 tons of clay brick.

No. of Pages : 19 No. of Claims : 3

(12) PATENT APPLICATION PUBLICATION
(19) INDIA
(22) Date of filing of Application :06/07/2021
(21) Application No.202141030256 A
(43) Publication Date : 16/07/2021

(54) Title of the invention : A SYSTEM AND METHOD OF IOT HEALTHCARE MANAGEMENT TECHNIQUE FOR MODERN MEDICAL PROCESSES

(51) International classification	:A61B0005000000, G16H0010600000, G06Q0050220000, A61B0005021000, G16H0040670000
(31) Priority Document No	:NA
(32) Priority Date	:NA
(33) Name of priority country	:NA
(86) International Application No	:NA
Filing Date	:NA
(87) International Publication No	: NA
(61) Patent of Addition to Application Number	:NA
Filing Date	:NA
(62) Divisional to Application Number	:NA
Filing Date	:NA

(71)**Name of Applicant :**
1)Dr. S BASKARAN
Address of Applicant :S/o. R SUBBURAMAN, ASSOCIATE PROFESSOR & HEAD, DEPARTMENT OF MASTER OF BUSINESS ADMINISTRATION, Dr. AMBEDKAR INSTITUTE OF TECHNOLOGY, MALLATHALLI, BANGALORE 560056, KARNATAKA, INDIA. Karnataka India
2)G TONY SANTHOSH
3)Dr. P CHITRA
4)MAHESHA C R
5)Dr. S NAGANANDHINI
6)Dr. J MADHUSUDHANAN
7)Dr. DEEPAK S
8)Dr. MUKESH CHANSORIYA
9)Dr. JAYWANT RAMDAS BHADANE
10)Dr. ASHISH KHARE
11)Dr. P M MANOHAR
12)Dr. MANJEET KOUR ARORA
13)Dr. D V DIVAKARA RAO
14)SATHYANARAYANA KALIPRASAD
15)K NITHIYANANTHAN
16)NEELAM SANJEEV KUMAR
17)Dr. JAYESHKUMAR RAMCHANDRABHAI PITRODA
18)PARTHASARATHY K
19)Dr. PRINCE PRASHANT SHARMA
20)Dr. CHANDRA KUMAR DIXIT
21)GANESHKUMAR P
22)PARTHIBAN P
23)S NITHYANANTHI
(72)**Name of Inventor :**
1)Dr. S BASKARAN
2)G TONY SANTHOSH
3)Dr. P CHITRA
4)MAHESHA C R
5)Dr. S NAGANANDHINI
6)Dr. J MADHUSUDHANAN
7)Dr. DEEPAK S
8)Dr. MUKESH CHANSORIYA
9)Dr. JAYWANT RAMDAS BHADANE
10)Dr. ASHISH KHARE
11)Dr. P M MANOHAR
12)Dr. MANJEET KOUR ARORA
13)Dr. D V DIVAKARA RAO
14)SATHYANARAYANA KALIPRASAD
15)K NITHIYANANTHAN
16)NEELAM SANJEEV KUMAR
17)Dr. JAYESHKUMAR RAMCHANDRABHAI PITRODA
18)PARTHASARATHY K
19)Dr. PRINCE PRASHANT SHARMA
20)Dr. CHANDRA KUMAR DIXIT
21)GANESHKUMAR P
22)PARTHIBAN P
23)S NITHYANANTHI

(57) Abstract :
The system of the present invention consists of various medical devices such as sensors and web based or mobile based applications which communicate via network connected devices and helps to monitor and record patients™ health data and medical information. The proposed outcome of the paper is to build a system to provide world-class medical aid to the patients even in the remotest areas with no hospitals in their areas by connecting over the internet and grasping information through about their health status via the wearable devices provided in the kit using a raspberry pi microcontroller which would be able to record the patient™s heart rate, blood pressure. The system would be smart to intimate the patient™s family members and their doctor about the patient™s current health status and full medical information in case any medical emergency arises.

No. of Pages : 24 No. of Claims : 4

(12) PATENT APPLICATION PUBLICATION
(19) INDIA
(22) Date of filing of Application :06/07/2021
(21) Application No.202141030279 A
(43) Publication Date : 16/07/2021

(54) Title of the invention : A NOVEL ENCAPSULATION FEEDING TECHNIQUE TO PRODUCE QUALITY COMPOSITES

(51) International classification	:F16J0009260000, B22D0021000000, C22C0037100000, C22C0032000000, F16D0065120000
(31) Priority Document No	:NA
(32) Priority Date	:NA
(33) Name of priority country	:NA
(86) International Application No	:NA
Filing Date	:NA
(87) International Publication No	: NA
(61) Patent of Addition to Application Number	:NA
Filing Date	:NA
(62) Divisional to Application Number	:NA
Filing Date	:NA

(71)**Name of Applicant :**
1) Dr. NATRAYAN L
Address of Applicant :DEPARTMENT OF MECHANICAL ENGINEERING, SAVEETHA SCHOOL OF ENGINEERING, SAVEETHA NAGAR, THANDALAM, CHENNAI, TAMIL NADU, INDIA - 602105. Tamil Nadu India
(72)**Name of Inventor :**
1) Dr. NATRAYAN L
2)Dr. SENTHIL KUMAR M
3)Dr. PRASHANTH K P
4)Mr. VINOTH KUMAR SELVARAJ

(57) Abstract :
Aluminum matrix composites (AMC) known for their superior mechanical properties are used in automotive applications. Currently, cast iron (CI) piston ring otter excellent wear-resistance at high temperatures. The limitation of the CI piston ring is the development of air pockets that leads to premature failure of the engine cylinder. To overcome this limitation, aluminium metal matrix composite (AMMC) was used as piston ring that offers more mechanical and tribological characteristics Fabrication by novel encapsulate feeding technique were used improve the premature failure in this research.. The 6xxx series classified with magnesium as a major element with aluminium offers better properties. Among the Al-Mg/Si alloys, AA606I has a good strength and wear rate. The composite material has better feasibility to control the engine tribological parameters. This research work aims at the development of a new aluminium hybrid composite material (AA606I/ alumina oxide/ silicon carbide / graphite) by novel encapsulate feeding technique using squeeze casting method with enhanced tribological and mechanical characteristics for the piston ring application.

No. of Pages : 24 No. of Claims : 6

(12) PATENT APPLICATION PUBLICATION
(21) Application No.202141030280 A
(19) INDIA
(22) Date of filing of Application :06/07/2021
(43) Publication Date : 16/07/2021

(54) Title of the invention : PLACENTA DERIVED MESENCHYMAL STROMAL CELLSECRETOME, PROCESS AND USES THEREOF

(51) International classification	:A61K0035280000, C12N0005077500, A61K0035500000, A61Q0019000000, A61K0008980000	(71)**Name of Applicant :** **1)Dr. SUMA KANTIPUDI** Address of Applicant :Plot No. 18, Bharani layout, Road No. 78, Jubilee hills, Hyderabad, Telangana, 500033 Telangana India (72)**Name of Inventor :** **1)Dr. SUMA KANTIPUDI**
(31) Priority Document No	:NA	
(32) Priority Date	:NA	
(33) Name of priority country	:NA	
(86) International Application No	:NA	
Filing Date	:NA	
(87) International Publication No	: NA	
(61) Patent of Addition to Application Number	:NA	
Filing Date	:NA	
(62) Divisional to Application Number	:NA	
Filing Date	:NA	

(57) Abstract :
As attached in PDF

No. of Pages : 27 No. of Claims : 15

(12) PATENT APPLICATION PUBLICATION
(21) Application No.202141030286 A
(19) INDIA
(22) Date of filing of Application :06/07/2021
(43) Publication Date : 16/07/2021

(54) Title of the invention : MACHINE LEARNING POWERED IMAGE PROCESSING TECHNIQUE FOR FOOD PRODUCTS RECOMMENDATION FOR PREFERRED TASTE AND COLORATION

(51) International classification	:G06N0020000000, G06N0005020000, G06N0003020000, G06F0016330000, G06K0009620000
(31) Priority Document No	:NA
(32) Priority Date	:NA
(33) Name of priority country	:NA
(86) International Application No	:NA
Filing Date	:NA
(87) International Publication No	: NA
(61) Patent of Addition to Application Number	:NA
Filing Date	:NA
(62) Divisional to Application Number	:NA
Filing Date	:NA

(71)**Name of Applicant :**
1)Dr. Raju Shanmugam
Address of Applicant :Tamil Nadu (Professor & Dean, Unitedworld School of Computational Intelligence (USCI), KARNAVATI UNIVERSITY), Plot No. 258, Door No. 7/154, 5th Street, Rajagopalapuram, Moulivakkam, Chennai- 600 116 Tamil Nadu India
2)Dr. Thirunavukkarasu Kannapiran
3)Dr. Avadhesh Kumar Gupta
4)Dr. Manivel Kandasamy
5)Prof. Karthick Rajan
6)Prof. Krishna Kumar Singh
(72)**Name of Inventor :**
1)Dr. Raju Shanmugam
2)Dr. Thirunavukkarasu Kannapiran
3)Dr. Avadhesh Kumar Gupta
4)Dr. Manivel Kandasamy
5)Prof. Karthick Rajan
6)Prof. Krishna Kumar Singh

(57) Abstract :
1) A mobile application operating over the Internet with a combination artificial intelligence automation consisting of top-down decision making and ensemble machine learning modules to identify a particular dish from its image and to give the its recipe and the closest recipes to it. 2) As mentioned in Claim 1, the image data is taken in the phone within the mobile application console and sent to the dedicated server.

No. of Pages : 7 No. of Claims : 5

(12) PATENT APPLICATION PUBLICATION
(21) Application No.202141030288 A
(19) INDIA
(22) Date of filing of Application :06/07/2021
(43) Publication Date : 16/07/2021

(54) Title of the invention : MULTIPLE SENSOR DATA FUSION ENABLED AI BASED EMOTION IDENTIFICATION SYSTEM

(51) International classification	:G06K0009620000, G06K0009000000, G06N0003080000, G06N0003040000, A61B0005160000
(31) Priority Document No	:NA
(32) Priority Date	:NA
(33) Name of priority country	:NA
(86) International Application No	:NA
Filing Date	:NA
(87) International Publication No	: NA
(61) Patent of Addition to Application Number	:NA
Filing Date	:NA
(62) Divisional to Application Number	:NA
Filing Date	:NA

(71)**Name of Applicant :**
1)Dr. T Sethukarasi
Address of Applicant :Professor and Head, Department of Computer Science and Engineering, R.M.K. Engineering College, RSM Nagar, Kavaraipettai, Tamil Nadu, India 601 206,. Tamil Nadu India
2)Dr. C Geetha
3)Dr. Sandra Johnson
4)Ms. S D Lalitha
5)Ms. Anusha Sanampudi
6)Ms. A Jasmine Gilda
(72)**Name of Inventor :**
1)Dr. T Sethukarasi
2)Dr. C Geetha
3)Dr. Sandra Johnson
4)Ms. S D Lalitha
5)Ms. Anusha Sanampudi
6)Ms. A Jasmine Gilda

(57) Abstract :
1) An integrated emotional identification system that employs three sensors and collates their data for analysis using ensemble artificial intelligence to give the most accurate detailed emotional state of a person. 2) As mentioned in Claim 1, the employment of camera sensors to identify the facial expressions of the person employing feature extraction based SVM and CNN algorithms.

No. of Pages : 6 No. of Claims : 6

(12) PATENT APPLICATION PUBLICATION
(19) INDIA
(22) Date of filing of Application :06/07/2021
(21) Application No.202141030291 A
(43) Publication Date : 16/07/2021

(54) Title of the invention : A NANOTECHNOLOGY ROOTED METHOD FOR PREPARING BIODEGRADABLE PRODUCT PACKAGING MATERIALS.

(51) International classification :C08L0067040000, B65D0065460000, C09D0167040000, C08L0023060000, B29C0048920000
(31) Priority Document No :NA
(32) Priority Date :NA
(33) Name of priority country :NA
(86) International Application No :NA
Filing Date :NA
(87) International Publication No : NA
(61) Patent of Addition to Application Number:NA
Filing Date :NA
(62) Divisional to Application Number :NA
Filing Date :NA

(71)**Name of Applicant :**
1)Mr. Koushik Kosanam
Address of Applicant :Mr. Koushik Kosanam Graduate Researcher Manufacturing Systems Engineering and Management Department California State University, Northridge, USA Pincode: 91330 U.S.A.
2)Dr. Umme Thahira Khatoon
3)Mr. B. Munisudhakar
4)Mr. T CH Anil Kumar
5)Mr.Ram Kumar Sadula,
6)Mr. Mutyala Veera Venkata Vara Prasad
7)Dr. Kartik N. Shinde
8)Dr. Tirumalasetty Chiranjeevi
9)Mr. N Manoj Kumar
10)Mr. V Nandakumar
11)Mr. N B Prakash Tiruveedula
(72)**Name of Inventor :**
1)Mr. V Nandakumar
2)Dr. Kartik N. Shinde
3)Dr. Tirumalasetty Chiranjeevi
4)Mr. N Manoj Kumar
5)Mr. N B Prakash Tiruveedula
6)Mr. Koushik Kosanam
7)Mr. T CH Anil Kumar
8)Mr. Mutyala Veera Venkata Vara Prasad
9)Mr.Ram Kumar Sadula,
10)Mr. B. Munisudhakar
11)Dr. Umme Thahira Khatoon

(57) Abstract :
ABSTRACT A nanotechnology rooted method for preparing Biodegradable product packaging materials. The present invention discloses the packaging materials biodegradable based on nanotechnology, belong to packaging material field, based on the biodegradable packaging material of nanotechnology, including following weight ratio part: degradable raw material 20-35 parts, 10-15 parts of nano raw material, 6-12 parts of solubilizer, 2-7 parts of 18-30 parts of degradable raw materials, 8-16 parts of nano raw materials, and 8-16 parts of solubilizing agents, 2-6 parts of coupling agent, 4-12 parts of antioxidant, 4-8 parts of plasticizer. The degradable raw materials include the following weight ratios: 15-18 parts of urethane vinyl ester resin, 8-11 parts of polyethylene glycol, 5-9 parts of modified starch, and polyethylene terephthalate 20-40 Part with 8-12 parts of polylactic acid. Packaging material of the invention is more scientific and reasonable, it can be improved the toughness of packaging material, the color of packaging material can be changed when production, it can be decomposed quick and completely by the effect of microorganism in nature, significantly reduce environmental pressure, the optimization for having effectively facilitated environment, reduces production cost, can replace common packaging material.

No. of Pages : 13 No. of Claims : 7

(12) PATENT APPLICATION PUBLICATION
(21) Application No.202141030313 A
(19) INDIA
(22) Date of filing of Application :06/07/2021
(43) Publication Date : 16/07/2021

(54) Title of the invention : A METHOD FOR HIGH-GRADE GLIOMAS SEGMENTATION BASED ON H-DENSE U-NET WITH CNN ARCHITECTURE

(51) International classification	:G06T0007110000, G06T0007000000, G06N0003040000, G06N0003080000, A61B0006000000
(31) Priority Document No	:NA
(32) Priority Date	:NA
(33) Name of priority country	:NA
(86) International Application No	:NA
Filing Date	:NA
(87) International Publication No	: NA
(61) Patent of Addition to Application Number	:NA
Filing Date	:NA
(62) Divisional to Application Number	:NA
Filing Date	:NA

(71)**Name of Applicant :**
1)Dr. J. Seetha
Address of Applicant :Assistant professor, Department of Computer science. SRM Institute of Science and Technology, Ramapuram Campus , Bharathi Salai, chennai, Tamilnadu, lndia - 600089 Tamil Nadu India
(72)**Name of Inventor :**
1)Dr. J. Seetha

(57) Abstract :
A METHOD FOR HIGH-GRADE GLIOMAS SEGMENTATION BASED ON H-DENSE U-NET WITH CNN ARCHITECTURE
The present disclosure relates to a method for high-grade gliomas segmentation based on H-dense U-net with CNN architecture. In an aspect, the method (100) for high-grade gliomas segmentation based on H-dense U-net with convolution neural network (CNN) architecture comprises steps of creating (102) a brain tumor segmentation database, by collecting medical resonance imaging (MRI) and detected tumor segmentation images from different medical institutions, pre-processing (104), data from training and masked images obtained from the database (102), processing (106), through H-Dense U-Net model, wherein the train and mask images are processed, pre-processing (108), the test image data, processing (110), through H-Dense U-Net segmentation model, wherein the test images are processed, creating (112), an output mask around the tumor, evaluating (114), the affected area. (Fig. 1 will be the reference figure)

No. of Pages : 20 No. of Claims : 5

(12) PATENT APPLICATION PUBLICATION
(21) Application No.202141030321 A
(19) INDIA
(22) Date of filing of Application :06/07/2021
(43) Publication Date : 16/07/2021

(54) Title of the invention : EMPIRICAL ANALYSIS OF HYBRID MACHINE LEARNING-BASED EARLIER STAGE COVID DISEASE PREDICTION USING LUNG CT IMAGES

(51) International classification	:G06K0009620000, G06N0020000000, G06N0003040000, G06F0017150000, G06N0005000000
(31) Priority Document No	:NA
(32) Priority Date	:NA
(33) Name of priority country	:NA
(86) International Application No	:NA
Filing Date	:NA
(87) International Publication No	: NA
(61) Patent of Addition to Application Number	:NA
Filing Date	:NA
(62) Divisional to Application Number	:NA
Filing Date	:NA

(71)**Name of Applicant :**
1)Dr. J. VENKATESH
Address of Applicant :CENTER FOR SYSTEM DESIGN, CHENNAI INSTITUTE OF TECHNOLOGY, SARATHY NAGAR, KUNDRATHUR, CHENNAI-69. Tamil Nadu India
2)Dr. ANITA TITUS
3)Dr.B.ARTHI
4)Dr. J. JEBASTINE
5)Mr. SUBHANI SHAIK
6)Mr.E.SAKTHIVEL
(72)**Name of Inventor :**
1)Dr. J. VENKATESH
2)Dr. ANITA TITUS
3)Dr.B.ARTHI
4)Dr. J. JEBASTINE
5)Mr. SUBHANI SHAIK
6)Mr.E.SAKTHIVEL

(57) Abstract :
Empirical analysis of hybrid machine learning-based earlier stage covid disease prediction using lung CT images. The Lung based CT images provide huge support to identify the Covid virus in earlier stages, in which the people are advised to take such type of scanning while infected with the coronavirus. An earlier stage identification of Corona Virus is the basic need nowadays, in which the disease is identified initially, which means it can easily be cured. The identification of the Covid virus over lung CT images is of course a complex task because the CT images contain low-intensity pixels and the contrast level variations are different on various images. So, it is complex to manipulate such images in practical, due to this a novel Digital Image Processing scheme is required to provide efficient support to the respective physician to identify the Corona Virus in earlier stages in a clear manner. The concept of machine learning is adopted over this paper to provide a proper prediction as well as the logic of dual classification algorithms are combined to form a new machine learning strategy to attain high accuracy with enhanced prediction probabilities. The logic of Deep Neural Network (DNN) is modulated to the logic of Random Forest (RF) Classification algorithm to make a new methodology called Hybrid Learning-based Disease Prediction Scheme (HLDPS). In which this proposed approach associates the benefits of both DNN and RF into this prediction strategy to make an appropriate prediction over lung CT images and report the level of severity based on the cell vector distance. The proposed invention is providing proper experimental proof of the mentioned things in a clear manner with graphical representations. For all the proposed approach of HLDPS is sufficient to predict the Corona Virus on earlier stages based on lung CT images in a fine manner and the associated proofs are specified clearly.

No. of Pages : 19 No. of Claims : 5

(12) PATENT APPLICATION PUBLICATION
(21) Application No.202141030366 A
(19) INDIA
(22) Date of filing of Application :06/07/2021
(43) Publication Date : 16/07/2021

(54) Title of the invention : A NANOTECHNOLOGY ROOTED METHOD FOR PREPARING BIODEGRADABLE PRODUCT PACKAGING MATERIALS

(51) International classification :C08L0067040000, B65D0065460000, C09D0167040000, C08L0067020000, C08L0023060000
(31) Priority Document No :NA
(32) Priority Date :NA
(33) Name of priority country :NA
(86) International Application No :NA
Filing Date :NA
(87) International Publication No : NA
(61) Patent of Addition to Application Number:NA
Filing Date :NA
(62) Divisional to Application Number :NA
Filing Date :NA

(71)**Name of Applicant :**
1)Mr. T CH Anil Kumar
Address of Applicant :Assistant Professor Department of Mechanical Engineering Vignan's Foundation for Science Technology and Research, Vadlamudi, Guntur, Andhra Pradesh, India Pincode: 522213 Andhra Pradesh India
2)Mr. V Nandakumar
3)Mr. B. Munisudhakar
4)Dr. Tirumalasetty Chiranjeevi
5)Mr. Koushik Kosanam
6)Dr. Umme Thahira Khatoon
7)Mr.Ram Kumar Sadula,
8)Mr. Mutyala Veera Venkata Vara Prasad
9)Mr. N B Prakash Tiruveedula
10)Dr. Kartik N. Shinde
11)Mr. N Manoj Kumar
(72)**Name of Inventor :**
1)Mr. T CH Anil Kumar
2)Mr. V Nandakumar
3)Mr. B. Munisudhakar
4)Dr. Tirumalasetty Chiranjeevi
5)Mr. Koushik Kosanam
6)Dr. Umme Thahira Khatoon
7)Mr.Ram Kumar Sadula,
8)Mr. Mutyala Veera Venkata Vara Prasad
9)Mr. N B Prakash Tiruveedula
10)Dr. Kartik N. Shinde
11)Mr. N Manoj Kumar

(57) Abstract :
The present invention discloses the packaging materials biodegradable based on nanotechnology, belong to packaging material field, based on the biodegradable packaging material of nanotechnology, including following weight ratio part: degradable raw material 20-35 parts, 10-15 parts of nano raw material, 6-12 parts of solubilizer, 2-7 parts of 18-30 parts of degradable raw materials, 8-16 parts of nano raw materials, and 8-16 parts of solubilizing agents, 2-6 parts of coupling agent, 4-12 parts of antioxidant, 4-8 parts of plasticizer. The degradable raw materials include the following weight ratios: 15-18 parts of urethane vinyl ester resin, 8-11 parts of polyethylene glycol, 5-9 parts of modified starch, and polyethylene terephthalate 20-40 Part with 8-12 parts of polylactic acid. Packaging material of the invention is more scientific and reasonable, it can be improved the toughness of packaging material, the color of packaging material can be changed when production, it can be decomposed quick and completely by the effect of microorganism in nature, significantly reduce environmental pressure, the optimization for having effectively facilitated environment, reduces production cost, can replace common packaging material.

No. of Pages : 12 No. of Claims : 7

(12) PATENT APPLICATION PUBLICATION
(19) INDIA
(22) Date of filing of Application :06/07/2021
(21) Application No.202141030389 A
(43) Publication Date : 16/07/2021

(54) Title of the invention : AN ARTIFICAL INTELLIGENCE BASED SMART PERSONAL DEFENCE SYSTEM

(51) International classification	:F41H0009100000, G08B0025010000, G08B0021020000, H04M0011040000, G08B0015000000
(31) Priority Document No	:NA
(32) Priority Date	:NA
(33) Name of priority country	:NA
(86) International Application No	:NA
Filing Date	:NA
(87) International Publication No	: NA
(61) Patent of Addition to Application Number	:NA
Filing Date	:NA
(62) Divisional to Application Number	:NA
Filing Date	:NA

(71)**Name of Applicant :**
1)Dr. SUBASINI UTHIRAPATHY
Address of Applicant :Assistant Professor, Department of Pharmacology, Tishk International University, Kurdistan Region Erbil Kurdistan Region, Iraq Ph: +964 7518732348 E-Mail: subasini.uthirapathy@tiu.edu.iq Tamil Nadu India
2)Dr. JAVED AHAMAD
3)Dr. JASWANTH ALBERT
4)Dr. S.M. CHITHRA
5)Dr. M. KAVITHA
6)Dr. A. GAYATHRI
7)N. NAGARAJAN
(72)**Name of Inventor :**
1)Dr. SUBASINI UTHIRAPATHY
2)Dr. JAVED AHAMAD
3)Dr. JASWANTH ALBERT
4)Dr. S.M. CHITHRA
5)Dr. M. KAVITHA
6)Dr. A. GAYATHRI
7)N. NAGARAJAN

(57) Abstract :
ABSTRACT OF THE INVENTION A self-defense system is very essential to both the genders these days. With the raise in the night shift culture, to cope up with the client in western countries, the personal safety of the people leaving home late night is a big concern. This artificial intelligence-based self-defense system can come in handy for those who concern about their safety. The glove has a push button knife, pepper spray canister and a smart programmable push button. These three components can be used individually or simultaneously based on the degree of risk encountered by the wearer of the glove. The pepper spray cannister can be employed when the wearer just needs to distract the opponent to reach a safe zone. This will buy a little time when used and relatively less harmful. When the victim encounters a person at an isolated place where he/she needs much time to reach a safe zone, the push button knife can be deployed by pressing the button using the thumb. This will injure the opponent to a higher degree and when the opponent shifts his focus to injury, the victim may escape to a safer zone. When the wearer encounters a rogue mob, neither the pepper spray canister nor the push button knife will be sufficient to handle the situation. At the time the victim will need the help of others. To get the help from the dear ones and Police, the victim can press the smart programmable push button once, this will activate the mobile phone of the victim and automatically send SOS messages to the numbers saved under In Case of Emergency • (ICE) and also an SOS call will be given to Police control room. If the Police or dear ones cannot reach the spot-on time based on the mobile signal, there is a possibility that the mobile phone of the Victim get snatched by the Mob. In that case the location of the victim could not be traced if the mobile is thrown away or damaged. If the Victim faces such situation the smart programmable push button should be pressed twice, such that the transmitter placed in victim™s shoe or other concealed personal belonging gets activated and transmits the location to the receiver placed at victim™s house. This will make the situation easy for the Police and dear ones to trace the location and to protect the victim.

No. of Pages : 13 No. of Claims : 9

(12) PATENT APPLICATION PUBLICATION
(21) Application No.202141030390 A
(19) INDIA
(22) Date of filing of Application :06/07/2021
(43) Publication Date : 16/07/2021

(54) Title of the invention : AUTOMATED SYSTEM AND METHOD FOR CLASSIFICATION AND RETRIEVAL OF YOGASAN FOR MUSCULAR DISORDER

(51) International classification	:G06K0009000000, G06K0009620000, G06F0016583000, A61B0005024000, G06K0009520000	(71)**Name of Applicant :**
(31) Priority Document No	:NA	
(32) Priority Date	:NA	
(33) Name of priority country	:NA	
(86) International Application No	:NA	
Filing Date	:NA	
(87) International Publication No	: NA	
(61) Patent of Addition to Application Number	:NA	
Filing Date	:NA	
(62) Divisional to Application Number	:NA	
Filing Date	:NA	

(71)**Name of Applicant :**
1)Dr. Suvarna Nandyal
Address of Applicant :Professor & HOD, Department of Computer Science and Engineering, P. D. A. College Of Engineering, Kalaburgi, KARNATAKA, INDIA Karnataka India
2)Mr. Somashekhar S. Dhanyal
3)Dr. Prakash Pattan
4)Mrs. Suvarna Laxmikant Kattimani
5)Mrs. Vijayalaxmi S. Patil
(72)**Name of Inventor :**
1)Dr. Suvarna Nandyal
2)Mr. Somashekhar S. Dhanyal
3)Dr. Prakash Pattan
4)Mrs. Suvarna Laxmikant Kattimani
5)Mrs. Vijayalaxmi S. Patil

(57) Abstract :
A system for classification and retrieval of Yogasan for muscular disorder, the system comprise of a first category and a second category include a video input module for uploading a video of a person performing a yoga asana or exercise, wherein each of the category includes: at least two object detection modules for detecting the presence of the person in the video, wherein the entire video is segmented into a plurality of time frames using at least image segmentation module, at least two feature extraction modules, an image classification module for determining the disorder in a human body by a classifier, an Object Character Recognition module for converting the classified image into text, and a content-based image retrieval module connected to a user interface module for solving the queries related to the disorder.

No. of Pages : 28 No. of Claims : 10

(12) PATENT APPLICATION PUBLICATION
(19) INDIA
(22) Date of filing of Application :06/07/2021
(21) Application No.202141030392 A
(43) Publication Date : 16/07/2021

(54) Title of the invention : RESCUE AND SURVEILLANCE VEHICLE FOR WOMEN SAFETY

(51) International classification	:B64C0039020000, G08B0013196000, H04W0004021000, H04N0007180000, G08B0025010000
(31) Priority Document No	:NA
(32) Priority Date	:NA
(33) Name of priority country	:NA
(86) International Application No	:NA
Filing Date	:NA
(87) International Publication No	: NA
(61) Patent of Addition to Application Number	:NA
Filing Date	:NA
(62) Divisional to Application Number	:NA
Filing Date	:NA

(71)**Name of Applicant :**
1)SRAVAN KUMAR REDDY D
Address of Applicant :SRM INSTITUTE OF SCIENCE AND TECHNOLOGY RAMAPURAM CAMPUS, BHARATHI SALAI, CHENNAI-600089 Tamil Nadu India
2)S.D. KUMAR
3)Dr. G.SWAMINATHAN
4)DR. A. MATHIVANAN
5)C. UTHIRAPATHY
6)G.MANIKANDAN
7)K.VINOTHKUMA
8)VENGADEKRISHNAN D
9)NAVEEN KUMAR
(72)**Name of Inventor :**
1)SRAVAN KUMAR REDDY D
2)S.D. KUMAR
3)Dr. G.SWAMINATHAN
4)DR. A. MATHIVANAN
5)C. UTHIRAPATHY
6)G.MANIKANDAN
7)K.VINOTHKUMA
8)VENGADEKRISHNAN D
9)NAVEEN KUMAR

(57) Abstract :
ABSTRACT RESCUE AND SURVEILLANCE VEHICLE FOR WOMEN SAFETY This invention is a rescue and surveillance system that is a combination of Drone and Mobile Application. When a user triggers a Freedom mode in mobile application, Location will be displayed in admin app which will be further sent to drone to perform operation. Drone is sent to the location to collect location images and footage which will be sent to Police control room as an evidence. There will be an inbuilt mike and speaker in drone to communicate with people causing issue. Freedom option is used when it™s an emergency and user is in trouble or when user knows something about to happen like rape, kidnap etc. Whereas Surveillance mode is used for minor issues like eve teasing or to help any woman who is in trouble. Rescue can be done with the help of drone because drone is the only vehicle which can pass through any form of terrain without any issues and time delay. This operation can be done around radius of 8kms where we need to setup bases accordingly.

No. of Pages : 26 No. of Claims : 1

(12) PATENT APPLICATION PUBLICATION
(19) INDIA
(22) Date of filing of Application :06/07/2021
(21) Application No.202141030415 A
(43) Publication Date : 16/07/2021

(54) Title of the invention : SMART AGRICULTURE MONITORING SCHEME USING MACHINE LEARNING STRATEGIES

(51) International classification	:G06K0009620000, G06N0020000000, G06K0009660000, G06N0005000000, G06N0020200000
(31) Priority Document No	:NA
(32) Priority Date	:NA
(33) Name of priority country	:NA
(86) International Application No	:NA
Filing Date	:NA
(87) International Publication No	: NA
(61) Patent of Addition to Application Number	:NA
Filing Date	:NA
(62) Divisional to Application Number	:NA
Filing Date	:NA

(71)**Name of Applicant :**
1)Dr. J. VENKATESH
Address of Applicant :CENTER FOR SYSTEM DESIGN, CHENNAI INSTITUTE OF TECHNOLOGY, SARATHY NAGAR, KUNDRATHUR, CHENNAI-69. Tamil Nadu India
2)Dr. K. K. RAMASAMY
3)M. ARUNA
4)Dr.K PRAVEEN KUMAR RAO
5)Dr. NELLUTLA SASIKALA
6)Mr. KARTHIK NASANI
(72)**Name of Inventor :**
1)Dr. J. VENKATESH
2)Dr. K. K. RAMASAMY
3)M. ARUNA
4)Dr.K PRAVEEN KUMAR RAO
5)Dr. NELLUTLA SASIKALA
6)Mr. KARTHIK NASANI

(57) Abstract :
Smart agriculture monitoring scheme using machine learning strategies. The proposed invention is a new machine learning strategy is introduced called Smart Learning Assisted Data Manipulation (SLADM), which is derived from the conventional machine learning approach, called Random Forest (RF) Classifier. The conventional RF classification technique is a well-known, scalable, robust, and user-friendly learning procedure, in which it utilizes the property of hyperparameter tuning option but in certain cases, the algorithm can operate efficiently even without adopting this hyperparameter tuning logic. This algorithm is mostly used in real-time evaluations for classification strategies due to its robustness, simplicity and it attains the best possible optimum solutions in the outcome.

No. of Pages : 25 No. of Claims : 9

(12) PATENT APPLICATION PUBLICATION
(21) Application No.202141030418 A
(19) INDIA
(22) Date of filing of Application :07/07/2021
(43) Publication Date : 16/07/2021

(54) Title of the invention : FUZZY LOGIC CONTROLLED TRAFFIC LIGHT CONTROLLING SYSTEM USING MORPHOLOGICAL OPERATORS WITH IMAGE STA

(51) International classification	:G06T0005000000, G08G0001080000, G06T0005200000, G06T0005400000, G08G0001081000
(31) Priority Document No	:NA
(32) Priority Date	:NA
(33) Name of priority country	:NA
(86) International Application No	:NA
Filing Date	:NA
(87) International Publication No	: NA
(61) Patent of Addition to Application Number	:NA
Filing Date	:NA
(62) Divisional to Application Number	:NA
Filing Date	:NA

(71)**Name of Applicant :**
1)MADHAVI LATHA PANDALA
Address of Applicant : VR SIDDHARTHA ENGINEERING COLLEGE, KANURU, VIJAYAWADA, ANDHRA PRADESH, INDIA, 520007 Andhra Pradesh India
2)PURNA CHANDRA REDDY V
3)Dr. B. SRINIVASA RAO
4)Dr. A. CHAITANYA KRISHNA
5)Dr. D. ESHWAR
6)Dr. KALYANAPU SRINIVAS
7)RAYUDU CHINNARAO
(72)**Name of Inventor :**
1) MADHAVI LATHA PANDALA
2)PURNA CHANDRA REDDY V
3)Dr. B. SRINIVASA RAO
4)Dr. A. CHAITANYA KRISHNA
5)Dr. D. ESHWAR
6)Dr. KALYANAPU SRINIVAS
7)RAYUDU CHINNARAO

(57) Abstract :
There is a need for development of advanced smart traffic controlling schemes due to the enhancement in urban traffic congestion. Currently, there are some traffic controlling methods based on timers or controlled by human. However, due to these systems there must be wastage of power in the night times and early morning hours. To address this issue, a Fuzzy logic based system is introduced for which works based on a novel and real time traffic light controlling system with digital image processing, in which the morphological operators are utilized with contrast enhancement and fuzzy logic systems. The developed or proposed traffic control system offers an enhanced improvement in response time, automation, reliability and overall efficiency over the conventional systems.

No. of Pages : 12 No. of Claims : 5

(12) PATENT APPLICATION PUBLICATION
(21) Application No.202141030424 A
(19) INDIA
(22) Date of filing of Application :07/07/2021
(43) Publication Date : 16/07/2021

(54) Title of the invention : Training a model for detecting a Standard Operating Procedure (SOP) compliance

(51) International classification	:G06K0009620000, G06N0020000000, G06N0003040000, G06T0007700000, G06T0007730000
(31) Priority Document No	:NA
(32) Priority Date	:NA
(33) Name of priority country	:NA
(86) International Application No	:PCT//
Filing Date	:01/01/1900
(87) International Publication No	: NA
(61) Patent of Addition to Application Number	:NA
Filing Date	:NA
(62) Divisional to Application Number	:NA
Filing Date	:NA

(71)**Name of Applicant :**
1)Hyperform Technology Private Limited
Address of Applicant :4th Floor, No 22, Salarpuria Towers-I Industrial Layout, Hosur Rd, 7th Block, Koramangala, Bengaluru, Karnataka Karnataka India
(72)**Name of Inventor :**
1)Saurabh Ghanekar
2)Sourav Sanyal
3)Miran Tafazzul Hussain Junaidi

(57) Abstract :
A method and a system for training a model for detecting a Standard Operating Procedure (SOP) violation is disclosed. The method comprises receiving a media file from a user. The method further comprises annotating at least an object in the media file. The media file is augmented in runtime to obtain augmented data. Further, a deep learning model is trained with the augmented data to generate a baseline trained model. The baseline trained model is generated after the training reaches a predefined threshold. Subsequently, the method comprises feeding a decoded camera stream to the baseline trained model. The method furthermore comprises detecting at least an SOP compliance from the decoded camera stream when the object is under observation based on the assigned SOP. Finally, the method comprises recursively training the baseline trained model based on the SOP compliance. The baseline trained model is recursively trained using semi-supervised learning techniques.

No. of Pages : 20 No. of Claims : 10

(12) PATENT APPLICATION PUBLICATION
(19) INDIA
(22) Date of filing of Application :07/07/2021

(21) Application No.202141030433 A
(43) Publication Date : 16/07/2021

(54) Title of the invention : A SYSTEM AND METHOD FOR PREDICTING SEISMIC EVENT USING ML & AI INTERFACES •

(51) International classification	:G01V0001000000, G06N0020000000, G08B0021100000, G06N0007000000, G06F0015760000
(31) Priority Document No	:NA
(32) Priority Date	:NA
(33) Name of priority country	:NA
(86) International Application No	:PCT//
Filing Date	:01/01/1900
(87) International Publication No	: NA
(61) Patent of Addition to Application Number	:NA
Filing Date	:NA
(62) Divisional to Application Number	:NA
Filing Date	:NA

(71)**Name of Applicant :**
1)Dr.A.Balaji
Address of Applicant :Associate Professor, Department of Computer Science and Engineering, Guntur Engineering College, Guntur, Andhra Pradesh, India. Pin Code:522002 Andhra Pradesh India
2)Dr.Raghavendra N
3)Dr.Pilli Lalitha Kumari
4)Ms.G.Madhavi Reddy
5)Dr.J.Joseph Ignatious
6)Mrs.C.M.Nalayini
7)Dr.Sushma Jaiswal
8)Mr.Tarun Jaiswal
9)Dr.MD Javeed Ahammed
10)Dr.Rabinarayan Satpathy
(72)**Name of Inventor :**
1)Dr.A.Balaji
2)Dr.Raghavendra N
3)Dr.Pilli Lalitha Kumari
4)Ms.G.Madhavi Reddy
5)Dr.J.Joseph Ignatious
6)Mrs.C.M.Nalayini
7)Dr.Sushma Jaiswal
8)Mr.Tarun Jaiswal
9)Dr.MD Javeed Ahammed
10)Dr.Rabinarayan Satpathy

(57) Abstract :
[034] The present invention discloses a system for predicting seismic event using 5 Machine learning (ML) and Artificial Intelligence (AI) interfaces. The system includes, but not limited to, a plurality of sensors provided with a boundary calculation by using a microcontroller for a predefined area in 3 dimensional space with the measured data of energy for a seismic event. Further, the position of a seismic source, and a time of said seismic event by using deep learning 10 module and Machine learning interfaces. The measured data of energy is done by a first transducer array with a placed sets of seismometers designed to detect a plurality of wave movements. The seismometers further detect the wave movements and convert it into a wave movements into a first voltage.
Accompanied Drawing [FIG. 1]

No. of Pages : 21 No. of Claims : 9

(12) PATENT APPLICATION PUBLICATION
(21) Application No.202141030440 A
(19) INDIA
(22) Date of filing of Application :07/07/2021
(43) Publication Date : 16/07/2021

(54) Title of the invention : SYSTEM AND METHOD FOR AUTOMATED INSPECTION OF COMPONENTS USING IMAGE AUGMENTATION AND COMPUTER VISION MODELS

(51) International classification	:G06T0007000000, A61H0005000000, G06K0009620000, H04N0005232000, G06T0003400000	(71)**Name of Applicant :** **1)CourseBricks** Address of Applicant :No.154, First Floor, East Uthra Street, Srirangam, Tiruchirappalli, Tamil Nadu, India 620006 Tamil Nadu India
(31) Priority Document No	:NA	(72)**Name of Inventor :**
(32) Priority Date	:NA	**1)Mr. Ravishankar Rajagopalan**
(33) Name of priority country	:NA	
(86) International Application No	:NA	
Filing Date	:NA	
(87) International Publication No	: NA	
(61) Patent of Addition to Application Number	:NA	
Filing Date	:NA	
(62) Divisional to Application Number	:NA	
Filing Date	:NA	

(57) Abstract :
[0023] The present invention discloses a system and method for automated inspection of components using image augmentation and computer vision models. The system comprises an image capturing device (101) which repeatedly follows a linear motion pattern over a linear motion guideway (103) for capturing a plurality of images of the interior surface of the component (102). Subsequently, the plurality of images are stitched using a computer vision model, wherein the stitched image represents a realistic view of the interior surface of the component (102). The stitched image is labelled and marked manually to indicate defective portions of the component (102) after which an image augmentation module substantially increases the number of images which are used to develop one or more computer vision training models for detecting defects. (Figure 1)

No. of Pages : 15 No. of Claims : 7

(12) PATENT APPLICATION PUBLICATION
(21) Application No.202141030484 A
(19) INDIA
(22) Date of filing of Application :07/07/2021
(43) Publication Date : 16/07/2021

(54) Title of the invention : 3-Way (Hand Crank, Solar Power & USB) Charging Portable Power Bank (Mobile charger) cum Emergency Light

(51) International classification	:H02J0007000000, H02J0007350000, G05B0015020000, H04W0004900000, F21S0009020000	(71)**Name of Applicant :** **1)Manikandan Sigamani** Address of Applicant :C4-104, SEIL Towers, Sembcorp Township, Madaraja Guduru Road, Kakupalli, Nellore . Pin Code: 524311 Andhra Pradesh India
(31) Priority Document No	:NA	(72)**Name of Inventor :**
(32) Priority Date	:NA	**1)Manikandan Sigamani**
(33) Name of priority country	:NA	
(86) International Application No	:PCT// /	
Filing Date	:01/01/1900	
(87) International Publication No	: NA	
(61) Patent of Addition to Application Number	:NA	
Filing Date	:NA	
(62) Divisional to Application Number	:NA	
Filing Date	:NA	

(57) Abstract :
Emergency light & Mobile phone has become an essential part of our needs to remain connected during darkness, travelling and natural disaster. During natural disaster there is a need of good accessibility to electrical supply for lighting and telecommunication purpose. The purpose of this project is to design, build and implement portable mobile charger cum emergency light, that can be charged through all means of available energy like solar, hand crank mechanical power, External electricity. This device act like 2600mAH Power Bank and has USB interface to support charging of handheld devices like Mobile Phones and other DC appliances like USB Fan. This rechargeable emergency light provides enough light to get you through several hours of darkness. It will be helpful for those long road trips and treks. Use it at home as an Emergency Light cum Mobile Charger.

No. of Pages : 17 No. of Claims : 6

(12) PATENT APPLICATION PUBLICATION
(19) INDIA
(22) Date of filing of Application :07/07/2021

(21) Application No.202141030485 A
(43) Publication Date : 16/07/2021

(54) Title of the invention : AN APPARATUS FOR BREAST CANCER DIAGNOSIS AND A METHOD THEREOF

(51) International classification	:A61B0005000000, G01N0033574000, G16H0050200000, A61B0008000000, A61B0005107000
(31) Priority Document No	:NA
(32) Priority Date	:NA
(33) Name of priority country	:NA
(86) International Application No	:NA
Filing Date	:NA
(87) International Publication No	: NA
(61) Patent of Addition to Application Number	:NA
Filing Date	:NA
(62) Divisional to Application Number	:NA
Filing Date	:NA

(71)**Name of Applicant :**
1)Deepa B G
Address of Applicant :School of CSA, 3rd Floor, Swami Vivekananda Block, REVA University, Near to BSF, Bengaluru, Karnataka, India 560064. Karnataka India
2)Dr. S. Senthil
3)Suhaas K P
4)Dr. Robert L
5)Lokesh C K
6)Ayshwarya
7)S. Deepika
8)Sreejith R
9)Manu G Thomas
(72)**Name of Inventor :**
1)Deepa B G
2)Dr. S. Senthil
3)Suhaas K P
4)Dr. Robert L
5)Lokesh C K
6)Ayshwarya
7)S. Deepika
8)Sreejith R
9)Manu G Thomas

(57) Abstract :
The present invention provides an apparatus to improve the accuracy of breast cancer diagnosis and a method thereof. Said breast cancer diagnosis consists of a user (2), a medical practitioner (3), a diagnostic device (4) and an interface device (6) wherein the apparatus (20) is connected with the interface device (6). Said apparatus is a server (20) comprises of a processing module (21), a memory module (22) and an algorithm module (23). FIG-1

No. of Pages : 18 No. of Claims : 6

(12) PATENT APPLICATION PUBLICATION
(19) INDIA
(22) Date of filing of Application :07/07/2021
(21) Application No.202141030516 A
(43) Publication Date : 16/07/2021

(54) Title of the invention : 3D fabrication of improved oxygen ion conducting ceramic fuel cells

(51) International classification :C25B0001040000, H01M0004860000, H01M0004900000, C08G0065480000, C01B0013020000
(31) Priority Document No :NA
(32) Priority Date :NA
(33) Name of priority country :NA
(86) International Application No :PCT//
Filing Date :01/01/1900
(87) International Publication No : NA
(61) Patent of Addition to Application Number :NA
Filing Date :NA
(62) Divisional to Application Number :NA
Filing Date :NA

(71)**Name of Applicant :**
1)Dr. Beera Avinash Ben
Address of Applicant :Professor, Department of Mechanical Engineering, Avanthi IET Tagarapuvalasa,Vizag Andhra Pradesh India
2)Dr. Beera Satish Ben
3)Dr. Bapiraju Bandam
4)Sadhu Prasanth
5)Krishna Prafulla Badi
6)Boddu Rajnaveen
7)Dundi Jesraj Tataji
8)Yelisetti Yoganand
9)Hepsiba Seeli
10)Animireddy Sai Balaji Uttam
(72)**Name of Inventor :**
1)Dr. Beera Avinash Ben
2)Dr. Beera Satish Ben
3)Dr. Bapiraju Bandam
4)Sadhu Prasanth
5)Krishna Prafulla Badi
6)Boddu Rajnaveen
7)Dundi Jesraj Tataji
8)Yelisetti Yoganand
9)Hepsiba Seeli
10)Animireddy Sai Balaji Uttam

(57) Abstract :
Industrial scale deployment of fuel cells is essential for catalysing renewable clean energy production. The oxygen ion conducting ceramic electrolyte is key to accelerate renewable energy dependency. This invention details a new electrolyte composition and method for high cell performance. As well as a novel approach is adopted and disclosed in the current invention for which a 3D manufacturing route is experimentally studied to attain maximised material utilisation. Thus, produced fuel cell has proven to outperform cells developed by conventional techniques by 10.2%. The processing parameters and other technical data corresponding to optimal cell performance are disclosed in the relevant sessions of the invention documentation.

No. of Pages : 18 No. of Claims : 8

(12) PATENT APPLICATION PUBLICATION
(21) Application No.202141030536 A
(19) INDIA
(22) Date of filing of Application :07/07/2021
(43) Publication Date : 16/07/2021

(54) Title of the invention : Waste Segregation using IoT and Image Recognition

(51) International classification	:G06K0009000000, B65F0001000000, B65F0001140000, G06Q0050260000, G01N0033000000	(71)**Name of Applicant :** **1)Rahul Kumar Jha** Address of Applicant :Student, School of Computing & Information Technology,REVA University,Bangalore, India Karnataka India
(31) Priority Document No	:NA	**2)Rinjan Chatterjee**
(32) Priority Date	:NA	**3)Saikumar Kamthane**
(33) Name of priority country	:NA	**4)Rashmi C**
(86) International Application No	:PCT//	**5)Dr.Mallikarjun M Kodbagi**
Filing Date	:01/01/1900	(72)**Name of Inventor :**
(87) International Publication No	: NA	**1)Rahul Kumar Jha**
(61) Patent of Addition to Application Number	:NA	**2)Rinjan Chatterjee**
Filing Date	:NA	**3)Saikumar Kamthane**
		4)Rashmi C
(62) Divisional to Application Number	:NA	**5)Dr.Mallikarjun M Kodbagi**
Filing Date	:NA	

(57) Abstract :
The world population has reached around 8 billion and the amount of waste being generated has also increased by a huge margin, which has led to difficulty in segregating wastes for disposal. A general method that is encouraged is to separate wastes among wet and dry wastes manually which eases up the disposal work, however, lot of people do not follow the things correctly; our solution hereby intends to develop a automated system to recognize the kind of waste and alert users. With use of IoT devices and sensor we can get essential data like the image of the waste and the amount of moisture present in it and then using image recognition and the moisture data a proper decision is made whether the target is wet or dry waste. This not only helps in proper segregation but also reducing the practice of improper waste disposal.

No. of Pages : 7 No. of Claims : 3

(12) PATENT APPLICATION PUBLICATION
(21) Application No.202141030571 A
(19) INDIA
(22) Date of filing of Application :07/07/2021
(43) Publication Date : 16/07/2021

(54) Title of the invention : MACHINE LEARNING AND IOT BASED SMART WEARABLE SYSTEM FOR AUTONOMOUS MANAGEMENT OF DIABETES MELLITUS

(51) International classification	:A61B0005145000, A61M0005142000, A61B0005000000, A61M0005172000, G06F0001160000
(31) Priority Document No	:NA
(32) Priority Date	:NA
(33) Name of priority country	:NA
(86) International Application No	:PCT//
Filing Date	:01/01/1900
(87) International Publication No	: NA
(61) Patent of Addition to Application Number	:NA
Filing Date	:NA
(62) Divisional to Application Number	:NA
Filing Date	:NA

(71)**Name of Applicant :**
1)Veena S,SJCIT
Address of Applicant :Assistant professor, ECE SJCIT - Chickballapur Karnataka India Karnataka India
2)Dr. Jagadeesh Kumar Ega,Chaitanya Deemed to be University
3)Seema J,Nagarjuna College of Engineering and Technology
4)Dr R Ashok Kumar,GRT Institute of Engineering and Technology
5)Dr.Sripriya Arunachalam,Alpha Arts and science college
6)Dr. Kola Ramesh,Chaitanya Bharathi Institute of Technology (A)
7)Dr Lakshminarayana M,SJB Institute of technology
8)Chilukuri Bala Venkata Subbarayudu,Shadan Women's College of Engineering and Technology
9)Dr. Sushma Jaiswal,Guru Ghasidas Vishwavidyalaya
10)Ashok Kumar Kusuma,B V Raju Institute Of Technology
11)Mahesh Kumar A S,PES College of Engineering
12)Sampath Kumar B,GM institute of technology
(72)**Name of Inventor :**
1)Veena S,SJCIT
2)Dr. Jagadeesh Kumar Ega,Chaitanya Deemed to be University
3)Seema J,Nagarjuna College of Engineering and Technology
4)Dr R Ashok Kumar,GRT Institute of Engineering and Technology
5)Dr.Sripriya Arunachalam,Alpha Arts and science college
6)Dr. Kola Ramesh,Chaitanya Bharathi Institute of Technology (A)
7)Dr Lakshminarayana M,SJB Institute of technology
8)Chilukuri Bala Venkata Subbarayudu,Shadan Women's College of Engineering and Technology
9)Dr. Sushma Jaiswal,Guru Ghasidas Vishwavidyalaya
10)Ashok Kumar Kusuma,B V Raju Institute Of Technology
11)Mahesh Kumar A S,PES College of Engineering
12)Sampath Kumar B,GM institute of technology

(57) Abstract :
The present invention discloses a smart wearable insulin pump operation based on integration of Machine Learning and IOT with an integrated glucometer assembly. The assembly includes, but not limited to, a blood glucose measuring module with a display means configured to measure and view the blood glucose level of a patient; an USB interface to connect the assembly with a computing device or a portable digital device for further analysing and view the results; a user interface provided with an IoT connectivity on the computing device or the portable digital device; a removable insulin cartridge connected with the piston; a processing unit designed to guide for a predetermined delivery from the removable insulin cartridge to the patient by actuating the linear assembly and according to the requirement evaluated by the blood glucose measuring module, and a machine learning interface to calibrate and to handle the whole process precisely according to the desired level of insulin delivery for the patient. Further, the machine learning interface is further configured to set and schedule the insulin delivery according to previous learning and training for the patient.

No. of Pages : 11 No. of Claims : 6

(12) PATENT APPLICATION PUBLICATION
(21) Application No.202141030581 A
(19) INDIA
(22) Date of filing of Application :07/07/2021
(43) Publication Date : 16/07/2021

(54) Title of the invention : A NOVEL SOLAR POWERED MULTIPURPOSE AGRICULTURAL ROBOT FOR EFFICIENT FARMING

(51) International classification	:B01J0023860000, A01B0051020000, A01G0009140000, A01B0069040000, A01C0007060000
(31) Priority Document No	:NA
(32) Priority Date	:NA
(33) Name of priority country	:NA
(86) International Application No	:NA
Filing Date	:NA
(87) International Publication No	: NA
(61) Patent of Addition to Application Number	:NA
Filing Date	:NA
(62) Divisional to Application Number	:NA
Filing Date	:NA

(71)**Name of Applicant :**
1)Dr. Harish Pulluri
Address of Applicant :Associate Professor, Department of Electrical and Electronics Engineering Anurag University, Venkatapur, Ghatkesar, Medchal-Malkajgiri district, Hyderabad, Telangana, India-500088. Telangana India
2)Dr. Mekala Girish Kumar
3)Dr. Vedik Basetti
4)Dr. Gouthamkumar Nadakuditi
5)Dr. Preeti
6)Ms. Shraddha Patange
(72)**Name of Inventor :**
1)Dr. Harish Pulluri
2)Dr. Mekala Girish Kumar
3)Dr. Vedik Basetti
4)Dr. Gouthamkumar Nadakuditi
5)Dr. Preeti
6)Ms. Shraddha Patange

(57) Abstract :
A NOVEL SOLAR POWERED MULTIPURPOSE AGRICULTURAL ROBOT FOR EFFICIENT FARMING Agriculture is considered as the primary occupation in every country. Contribution of the agriculture sector to India™s GDP is 17% employing 60% of total population. India is the largest and the oldest with 70% population depending on agriculture is still in the developing stage. Farmers still follow the traditional methods because of lack of resources. One of the reasons behind it is that most of the farmers have small fragmented landholdings and cannot afford heavy machinery and equipment. Labour is becoming costly and not easily available because of mass migration to urban areas. Robotics finds its applications in diverse fields thereby maximising the produce and giving efficient results. Mechanisation in any field is advantageous as it reduces the need of more labour and produces minimal error outcomes. Hence, Automation in agriculture solves various issues and can make farming at ease. The present work proposes a multipurpose agricultural robot that is small in size, such that small land holdings farmers are benefited from it. This agricultural robot drops seeds at an accurate position and does not require much labour which overcomes the problem of labour shortage and inaccurate seed sowing. It is automated and has an easy user interface to operate.

No. of Pages : 16 No. of Claims : 7

(12) PATENT APPLICATION PUBLICATION
(19) INDIA
(22) Date of filing of Application :07/07/2021
(21) Application No.202141030583 A
(43) Publication Date : 16/07/2021

(54) Title of the invention : Early Warning System Using Rainfall Threshold and Internet of Things

(51) International classification :A61B0005000000, A61B0005024000, H04L0029080000, H04W0004140000, G08B0025010000
(31) Priority Document No :NA
(32) Priority Date :NA
(33) Name of priority country :NA
(86) International Application No :PCT//
Filing Date :01/01/1900
(87) International Publication No : NA
(61) Patent of Addition to Application Number :NA
Filing Date :NA
(62) Divisional to Application Number :NA
Filing Date :NA

(71)**Name of Applicant :**
1)Mr S.Arockia Jayadhas, St.Joseph University in Tanzania
Address of Applicant :Assistant Lecturer Department of Electronics and Communication Engineering, St. Joseph university in Tanzania Tanzania
2)Dr. V. S. Manjula, Wollo University, Ethiopia
3)Dr.A.Devipriya, KPR Institute of Engineering and Technology, Coimbatore
4)Ms.Kalpana.G, Rajalakshmi Institute of Technology, Chennai
5)A. Ranjith, St. Joseph university in Tanzania
6)J. Anvar Shathik, Srinivas University College of Engineering & Technology, Karnataka
7)B Hanumantha Rao, PSCMR College of Engineering and Technology, Vijayawada
(72)**Name of Inventor :**
1)Mr S.Arockia Jayadhas, St.Joseph University in Tanzania
2)Dr. V. S. Manjula, Wollo University, Ethiopia
3)Dr.A.Devipriya, KPR Institute of Engineering and Technology, Coimbatore
4)Ms.Kalpana.G, Rajalakshmi Institute of Technology, Chennai
5)A. Ranjith, St. Joseph university in Tanzania
6)J. Anvar Shathik, Srinivas University College of Engineering & Technology, Karnataka
7)B Hanumantha Rao, PSCMR College of Engineering and Technology, Vijayawada

(57) Abstract :
Monitoring the patient or a senior citizen day by day is a difficult task for the doctors and authorities. The proposed system is a comfortable and cost-effective patient tracking system with location coordinate and health information. The invention uses GPS module to get coordinate of patient and pulse sensor to detect the patient heartbeat, Arduino due analyses the heart beat to detect any abnormal condition. System works on two different stage of connectivity once the Wi-Fi network available it updates heart beat continuously to the cloud storage and react upon abnormal condition with email or SMS notification using web IFTTT client. For the second phase when the Wi-Fi gets disconnected the GSM module activate and send GPS and pulse data through SMS service to the authorised personality. This device support measuring the heart beat to detect patient up normality with cloud infrastructure. The source location is been calculated using GPS framework.

No. of Pages : 9 No. of Claims : 5

(12) PATENT APPLICATION PUBLICATION
(21) Application No.202141030593 A
(19) INDIA
(22) Date of filing of Application :08/07/2021
(43) Publication Date : 16/07/2021

(54) Title of the invention : MACHINE LEARNING USING UNIVARIATE AND MULTIVARIATE MODELS FOR WATER QUALITY PREDICTION

(51) International classification	:G06N0003040000, G06N0003080000, G01N0033180000, G06Q0010040000, G06Q0050060000
(31) Priority Document No	:NA
(32) Priority Date	:NA
(33) Name of priority country	:NA
(86) International Application No	:PCT//
Filing Date	:01/01/1900
(87) International Publication No	: NA
(61) Patent of Addition to Application Number	:NA
Filing Date	:NA
(62) Divisional to Application Number	:NA
Filing Date	:NA

(71)**Name of Applicant :**
1)Dr.Jebakumar Immanuel.D
Address of Applicant :Assistant Professor, Department of Computer Science and Engineering, SNS College of Engineering, Coimbatore 641107, Tamilnadu Tamil Nadu India
2)Mr.Kiran Cornelio
3)Dr.V.Preetha
4)Dr.N.N.Krishna Veni
5)Ms.R.Geetha
6)Dr.Harsh Vikram Singh
7)Dr.S.Ajitha
8)Dr.Dharmendra Kumar Singh
(72)**Name of Inventor :**
1)Dr.Jebakumar Immanuel.D
2)Mr.Kiran Cornelio
3)Dr.V.Preetha
4)Dr.N.N.Krishna Veni
5)Ms.R.Geetha
6)Dr.Harsh Vikram Singh
7)Dr.S.Ajitha
8)Dr.Dharmendra Kumar Singh

(57) Abstract :
During the last few years, water quality has been compromised by different contaminates. Subsequently, showing and predicting water quality have gotten important in controlling water pollution. Water is a sustainable source where various explores on water quality estimating have been completed to build productive determining models. Statistical approaches like Auto-Regressive Integrated Moving Average (ARIMA), Exponential smoothing are used to handle water quality. Artificial Neural Networks (ANN) based algorithms like Multilayer Perceptron (MLP), Recurrent Neural Network (RNN) algorithms are used to capture the nonlinear relationship between the input and output information. We have chosen the dataset acquired from a water samples collected in river, stream, tank, dam and tap water at various places in a particular area in town with different time interval and forecasting performance are verified with actual data. This work considers water quality as the input parameter and built a univariate model using statistical techniques such as ARIMA, Exponential smoothing, etc. To improve the forecasting accuracy, a multivariate model (water quality and contaminated wate level) is built using various intelligent learning-based algorithms (ANN). ANN algorithms such as random forest algorithm, LSTM algorithm (Univariate, Multivariate) are implemented on river, tank time series data to conduct an experimental study on statistical and artificial neural network based algorithms. the water quality parameters primarily include ammoniacal nitrogen (AN), suspended solid (SS) and pH. Metrics like MSE, RMSE are considered, and experiment results show that ANN-based algorithms provides accurate water quality results.

No. of Pages : 5 No. of Claims : 2

(12) PATENT APPLICATION PUBLICATION
(21) Application No.202141030609 A
(19) INDIA
(22) Date of filing of Application :08/07/2021
(43) Publication Date : 16/07/2021

(54) Title of the invention : Hybrid effect of Steel and Glass Fibers on Nano Silica based High Strength Self Compacting Concrete

(51) International classification	:C04B0111000000, C04B0028040000, G01N0033380000, C08K0003360000, C09D0005000000	(71)**Name of Applicant :** **1)Dr. Kannam Praveen** Address of Applicant :Assistant Professor, School of civil engineering, REVA University Karnataka India **2)Dr. Seelam Srikanth Reddy**
(31) Priority Document No	:NA	(72)**Name of Inventor :**
(32) Priority Date	:NA	**1)Dr. Kannam Praveen**
(33) Name of priority country	:NA	**2)Dr. Seelam Srikanth Reddy**
(86) International Application No	:PCT//	
Filing Date	:01/01/1900	
(87) International Publication No	: NA	
(61) Patent of Addition to Application Number	:NA	
Filing Date	:NA	
(62) Divisional to Application Number	:NA	
Filing Date	:NA	

(57) Abstract :
Self-compacting concrete (SCC) is considered as a concrete which can be placed and compacted under its own weight with little or no vibration without segregation or bleeding. Recently, Nano particles have been gaining increasing attention and have been applied in many fields to fabricate new materials with novel functions due to their unique physical and chemical properties. In the present work Self Compacting Concrete having characteristic compressive strength of 60 MPa and 80 MPa was developed using Nansu method of mix design. For the developed SCC mix, Nano silica was added at 1%, 1.5%, and 2% by weight of cement and optimum percentage of addition was found out based on the compressive strength. Then the effect of steel fibers and glass fibers on the mechanical behavior of nano silica based high strength self-compacting concrete was determined. Various fresh properties as Slump flow, J-Ring, V-funnel, L-box tests were conducted and checked against EFNARC specifications. Mechanical properties as Compressive, Split Tensile and Flexural strength are found out for M60 and M80 grade SCC for both with and without Nano silica (SiO_2) along with steel and glass fibers. It can be concluded that the SCC containing both silica and fibers had better strength properties compared with SCC without any addition. Test results indicate that use of Nano particles in concrete has improved the performance of concrete in various strength aspects.

No. of Pages : 10 No. of Claims : 1

(12) PATENT APPLICATION PUBLICATION
(21) Application No.202141030624 A
(19) INDIA
(22) Date of filing of Application :08/07/2021
(43) Publication Date : 16/07/2021

(54) Title of the invention : Machine Learning Techniques for Efficacious Corporate Governance

(51) International classification	:G06N0003040000, G06N0003080000, G06N0020000000, G06Q0010060000, G06N0005000000
(31) Priority Document No	:NA
(32) Priority Date	:NA
(33) Name of priority country	:NA
(86) International Application No	:PCT//
Filing Date	:01/01/1900
(87) International Publication No	: NA
(61) Patent of Addition to Application Number	:NA
Filing Date	:NA
(62) Divisional to Application Number	:NA
Filing Date	:NA

(71)**Name of Applicant :**
1)Dr. M Subramanyam
Address of Applicant :Associate Professor Faculty of Commerce & Management Studies REVA Univarsity Bengaluru-560064 Karnataka India
(72)**Name of Inventor :**
1)Dr. M Subramanyam
2)Dr. Kumar Raja D R
3)Dr K. Sreenivasa Murthy
4)Dr. Mallikarjun M. Kodabagi

(57) Abstract :
Machine learning is a system that can adapt and learn from their experience. The Machine learning system is trained using known data, its results and then used for taking the decision based its learned information. The neural networks are used mostly for machine learning. One of the most significant source of corporate information is annual reports, Annual reports are a central point of corporate disclosure mechanism, and they play an important role in the corporate world and investment market. It is now common practice to use the annual report as a vehicle for developing and improving a company's image. The purpose of this investigation is to look into annual reports on corporate governance disclosure practices using Machine learning techniques that enables to analyse the reports as and they are available rapidly and more accurately with the goal of gaining a bird's-eye view of India's corporate disclosure practises as they emerge.

No. of Pages : 7 No. of Claims : 3

(12) PATENT APPLICATION PUBLICATION
(21) Application No.202141030638 A
(19) INDIA
(22) Date of filing of Application :08/07/2021
(43) Publication Date : 16/07/2021

(54) Title of the invention : Table Top Wet Grinder With plurality of food processing attachments

(51) International classification	:A47J0043070000, A47J0043046000, A47J0043080000, A47J0043040000, A47J0019020000	(71)**Name of Applicant :** **1)N.GOVINDARAJAN** Address of Applicant :D.No.1, SHARP NAGAR, NEHRU NAGAR WEST, KALAPATTI, COIMBATORE - 48 Tamil Nadu India
(31) Priority Document No	:NA	(72)**Name of Inventor :**
(32) Priority Date	:NA	**1)N.GOVINDARAJAN**
(33) Name of priority country	:NA	
(86) International Application No	:PCT// /	
Filing Date	:01/01/1900	
(87) International Publication No	: NA	
(61) Patent of Addition to Application Number	:NA	
Filing Date	:NA	
(62) Divisional to Application Number	:NA	
Filing Date	:NA	

(57) Abstract :
A table top wet grinder having a provision on the top of main body to accommodate detachable drive mechanism.A motor coupler is attached to motor shaft top end to engage bottom side of detachable drive mechanism bottom coupler to transmit power and speed. The top coupler at the top of detachable drive mechanism will engage with mixer grinder attachment coupler to transmit increased rpm to a mixer grinder to perform functions. A food processor can directly mount on main body without detachable drive mechanism. Food processor coupler will directly engaging with Motor coupler which is mounted on motor Shaft. The motor speed is sufficient to perform food processor functions. Thus, the Dry and wet grinding of pulses, cereals, and blending, juicing, pulp extraction, coconut milk extraction, kneading of wheat flour, pulversing of spices for masalas making, whipping of cream etc and host of operations the wet grinder arrangement can perform.

No. of Pages : 15 No. of Claims : 6

(12) PATENT APPLICATION PUBLICATION
(19) INDIA
(22) Date of filing of Application :08/07/2021

(21) Application No.202141030643 A
(43) Publication Date : 16/07/2021

(54) Title of the invention : An IOT System Designed to Monitor the Condition of Solar Photovoltaic Power Conditioning Units

(51) International classification	:H04N0007180000, H04L0029080000, G06Q0050100000, H04W0092020000, H04W0004700000
(31) Priority Document No	:NA
(32) Priority Date	:NA
(33) Name of priority country	:NA
(86) International Application No	:PCT//
Filing Date	:01/01/1900
(87) International Publication No	: NA
(61) Patent of Addition to Application Number	:NA
Filing Date	:NA
(62) Divisional to Application Number	:NA
Filing Date	:NA

(71)**Name of Applicant :**
1)Dr.W. Sridhar, Associate Professor/ Department of Mathematics, Koneru Lakshmaiah Education Foundation
Address of Applicant :Koneru Lakshmaiah Education Foundation,Vaddeswaram, Guntur, A.P-522502 Andhra Pradesh India
2)Sumayya Afreen, Assistant professor/ Department of CSE, Stanley College of Engineering and Technology for Women
3)Pati Prasanthi, Assistant Professor/ Department of CSE, Stanley College of Engineering and Technology for Women
4)G.Sumalatha, Associate Professor/ Department of CSE, CMR Engineering College
5)Adulapuram Pradeep, Assistant Professor / Department of CSE, TKR College of Engineering and Technology
6)Dr. Vempati Krishna, Professor / Department of CSE, TKR College of Engineering and Technology
7)Vasavi Sravanthi Balusa, Assistant Professor / Department of CSE, TKR College of Engineering and Technology
8)T. Thanmayee, Assistant Professor / Department of CSE, TKR College of Engineering and Technology
(72)**Name of Inventor :**
1)Dr.W. Sridhar, Associate Professor/ Department of Mathematics, Koneru Lakshmaiah Education Foundation
2)Sumayya Afreen, Assistant professor/ Department of CSE, Stanley College of Engineering and Technology for Women
3)Pati Prasanthi, Assistant Professor/ Department of CSE, Stanley College of Engineering and Technology for Women
4)G.Sumalatha, Associate Professor/ Department of CSE, CMR Engineering College
5)Adulapuram Pradeep, Assistant Professor / Department of CSE, TKR College of Engineering and Technology
6)Dr. Vempati Krishna, Professor / Department of CSE, TKR College of Engineering and Technology
7)Vasavi Sravanthi Balusa, Assistant Professor / Department of CSE, TKR College of Engineering and Technology
8)T. Thanmayee, Assistant Professor / Department of CSE, TKR College of Engineering and Technology

(57) Abstract :
Abstract An IoT monitoring system for solar photovoltaic power conditioning units (PCUs) is discussed in this research. It's possible to implement the recommended system design to fix maintenance problems, reduce repair time and problems related to management. To monitor solar PV PCU, we have built an intelligent remote monitoring system using the Internet. Remote monitoring for solar PV PCU was built into this system by integrating the Internet, a host, a network GPRS gateway, and other components. Illustrating the system's ability to track and save data from solar PV PCUs validates the concept. The implementation of the remote monitoring capabilities is done in real-time as a result.

No. of Pages : 13 No. of Claims : 3

(12) PATENT APPLICATION PUBLICATION
(21) Application No.202141030765 A
(19) INDIA
(22) Date of filing of Application :08/07/2021
(43) Publication Date : 16/07/2021

(54) Title of the invention : A CURVED RECTANGULAR STACK CHANNEL HEAT EXCHANGER

(51) International classification	:F28F0003040000, F28D0009000000, F28F0009020000, F28F0017000000, F28F0003020000
(31) Priority Document No	:NA
(32) Priority Date	:NA
(33) Name of priority country	:NA
(86) International Application No	:PCT//
Filing Date	:01/01/1900
(87) International Publication No	: NA
(61) Patent of Addition to Application Number	:NA
Filing Date	:NA
(62) Divisional to Application Number	:NA
Filing Date	:NA

(71)**Name of Applicant :**
1)NAGARAM MAHENDER
Address of Applicant :Chemical and Process Engineer. 14-35/5, Lothkunta Behind MMHS, Secunderabad 500015 Telangana India
2)Dr. G. Bhanu Radhika
3)Dr VENKATA SESHA PRAVEEN BULUSU
4)Archana Rao P
5)V. Balchander
6)T.REVATHI LAKSHMI PRASANNA
(72)**Name of Inventor :**
1)NAGARAM MAHENDER
2)Dr. G. Bhanu Radhika
3)Dr VENKATA SESHA PRAVEEN BULUSU
4)Archana Rao P
5)V. Balchander
6)T.REVATHI LAKSHMI PRASANNA

(57) Abstract :
A CURVED RECTANGULAR STACK CHANNEL HEAT EXCHANGER [035] The present invention discloses a Curved Rectangular Stack Channel heat exchanger. The assembly is provided with, but not limited to, at least one semi cylindrical pipe (1) connection for hot and cold fluid transferring; a single exchanger Curved Rectangular Stack Channel (2) having a heat transfer area; a top surface of the exchanger Curved Rectangular Stack Channel (3) with insulated based on the temperature profile if is sensitive or in high temperature conditions; a plurality of heat exchanging Curved Rectangular Stack Channels in alternate hot-cold position; and a dedicated inlet and outlet (5) for hot and cold fluid. Accompanied Drawing [FIG. 1]

No. of Pages : 24 No. of Claims : 8

(12) PATENT APPLICATION PUBLICATION
(21) Application No.202141030796 A
(19) INDIA
(22) Date of filing of Application :09/07/2021
(43) Publication Date : 16/07/2021

(54) Title of the invention : SPECIALIZED STICK FOR SECURITY GUARDS

(51) International classification	:A45C0013180000, H04W0004020000, E05G0007000000, G08B0015000000, A23C0019032000
(31) Priority Document No	:NA
(32) Priority Date	:NA
(33) Name of priority country	:NA
(86) International Application No	:NA
Filing Date	:NA
(87) International Publication No	: NA
(61) Patent of Addition to Application Number	:NA
Filing Date	:NA
(62) Divisional to Application Number	:NA
Filing Date	:NA

(71)**Name of Applicant :**
1)MUTHUMURUGAN MUTHUKOODALINGAM
Address of Applicant :1-90, Anuppapatti, Bodithasanpatti Post, Aundipatti, Theni (Dt), Tamil Nadu625536. Ph: 9095113355 E-Mail:muthumurugan185@yahoo.com Tamil Nadu India
2)Dr MATHESWARAN A
3)HARIPRASATH MUTHUMURUGAN
4)UMAMAHESWARI MUTHUMURUGAN
(72)**Name of Inventor :**
1)MUTHUMURUGAN MUTHUKOODALINGAM
2)Dr MATHESWARAN A
3)HARIPRASATH MUTHUMURUGAN
4)UMAMAHESWARI MUTHUMURUGAN

(57) Abstract :
ABSTRACT OF THE INVENTION SPECIALIZED STICK FOR SECURITY GUARDS The work of the night guards is very important in protecting important places and the places where valuables are kept. Although they often do well, there is a chance that even the biggest mistake can happen due to the occasional sleep deprivation or an attack by armed thieves. There are currently a few things in practice to avoid this, but they are not satisfactory enough. This specialized stick is for security guards are currently being developed to address this problem. The night guards who owns this system is designed so that if he/she is asleep during his work, the pressure sensor will monitor it and alert the guard and the authority if necessary. The shock system on this stick helps the night guard protect himself from enemies in the times of danger. Apart, during the emergency situation, the camera, light will be ON automatically and continuously taken the snapshot to identify the thieves later and for further investigations. The mechanical kind of arrangement is attached with this specialized stick through which the odour ball can be released from the stick and the same will be burst on the thieves™ body so as the specific form of odour is sprayed and the same can be useful in identifying the criminals/thieves shortly by alerting public/police officials. Hence using this stick, the guards can operate the system efficiently during these difficult situation so that the night guard can operate effectively in protecting himself and the place he needs to protect. With the widespread use of these specialist sticks for security guards, there is no doubt that night guards will be able to carry out their duties responsibly and confidently.

No. of Pages : 15 No. of Claims : 9

(12) PATENT APPLICATION PUBLICATION
(19) INDIA
(22) Date of filing of Application :09/07/2021

(21) Application No.202141030799 A
(43) Publication Date : 16/07/2021

(54) Title of the invention : Portable device for Chronic Kidney Disease analysis by using Raspberry-Pi camera

(51) International classification	:H01M0010052500, A61B0005200000, G01N0033497000, A01M0031000000, G08B0021040000
(31) Priority Document No	:NA
(32) Priority Date	:NA
(33) Name of priority country	:NA
(86) International Application No	:PCT//
Filing Date	:01/01/1900
(87) International Publication No	: NA
(61) Patent of Addition to Application Number	:NA
Filing Date	:NA
(62) Divisional to Application Number	:NA
Filing Date	:NA

(71)**Name of Applicant :**
1)Dr.K.P.Porkodi
Address of Applicant :Associate Professor, Department of Computer Science and Engineering,Vivekanandha College of Technology for Women,Tiruchengode, Namakkal. Tamil Nadu India
2)Dr.D.Sathiya
3)Dr.A.Gomathi
4)S.Purushothaman
5)V.Naveen Kumar
6)G.Karthikeyan
7)B.Saravanan
8)P.Arulmozhi
9)K.Radha
10)Vivek Pandiya Raj
11)Dr.M.Meenachi
12)C.Sathiyavel
(72)**Name of Inventor :**
1)Dr.K.P.Porkodi
2)Dr.D.Sathiya
3)Dr.A.Gomathi
4)S.Purushothaman
5)V.Naveen Kumar
6)G.Karthikeyan
7)B.Saravanan
8)P.Arulmozhi
9)K.Radha
10)Vivek Pandiya Raj
11)Dr.M.Meenachi
12)C.Sathiyavel

(57) Abstract :
The present invention relates to portable device for Chronic Kidney disease analysis by using Raspberry-Pi camera comprising Urine strip slot(10).Drop of Patient™s urine put over this urine Strip(3). After 10 seconds , it starts changing color and its image captured through Raspberry-Pi camera(2) and compared with stored image database in SD card via Raspberry-Pi micro controller(2).Monitoring stages of Kidney disease via image comparison and display results in LCD(4) module and also alert patient via Buzzer alarm device(5).This device can be operated by 12 V Lithium Ion battery(6) which may chargeable one, via DC-DC step down converter (7)and AC-DC charger module(8).This complete kit can be modelled using 3D printed (9) carbon fiber structure.

No. of Pages : 17 No. of Claims : 4

(12) PATENT APPLICATION PUBLICATION
(21) Application No.202141030800 A
(19) INDIA
(22) Date of filing of Application :09/07/2021
(43) Publication Date : 16/07/2021

(54) Title of the invention : Performance evaluation of fabricated Venturi injector for optimizing the water use and fertigation efficiency through micro-irrigation

(51) International classification	:A01C0023040000, G06Q0010060000, A01C0021000000, A01C0023000000, A01G0025000000
(31) Priority Document No	:NA
(32) Priority Date	:NA
(33) Name of priority country	:NA
(86) International Application No	:PCT// /
Filing Date	:01/01/1900
(87) International Publication No	: NA
(61) Patent of Addition to Application Number	:NA
Filing Date	:NA
(62) Divisional to Application Number	:NA
Filing Date	:NA

(71)**Name of Applicant :**
1)Dr. Rajashekhar S Laddimath
Address of Applicant :School of Civil Engineering, REVA UNIVERSITY, Rukmini Knowledge Park, Kattigenahalli, Yelahanka, Bengaluru Karnataka India
(72)**Name of Inventor :**
1)Dr. Rajashekhar S Laddimath
2)DR. NAGRAJ S. PATIL
3)DR. SANJEEV SANGAMI
4)MR.VARUN KUMAR B

(57) Abstract :
The future of India is at stake due to continuously depleting surface water and increasing pressure on underground water under projected climate change scenario. Conventional methods of irrigation such as flood irrigation, intensive tillage and residue burning are threatening sustainability of crop production system. The venturi injector has been used widely in different sizes to improve the fertigation and water use efficiency in micro irrigation system. In this work, we aim at optimizing the water use efficiency by saving more than 50% through coordinated effect of water and fertilizer. Besides, to enhance the precision of fertilization, one fabricated venture injector and two venture injector of different commercial brands under identical condition were examined. The motive flow of the experimental setup is compared through its coefficient of discharge values to suggest for improvisation in the venture injector. With the possible modification of venture injector as a hybrid model may give way for precision fertilization management and ultimately increase the net yield of the crop

No. of Pages : 4 No. of Claims : 1

(12) PATENT APPLICATION PUBLICATION
(21) Application No.202141030801 A
(19) INDIA
(22) Date of filing of Application :09/07/2021
(43) Publication Date : 16/07/2021

(54) Title of the invention : IOT Based Solar Powered Automated Waste Compactor

(51) International classification	:B30B0009300000, B65F0001140000, H02J0007350000, G06Q0010080000, B65F0003000000	(71)**Name of Applicant :** **1)Dr. Shanawaz Patil** Address of Applicant :School of Mechanical Engineering, REVA UNIVERSITY, Rukmini Knowledge Park, Kattigenahalli, Yelahanka, Bengaluru Karnataka India
(31) Priority Document No	:NA	(72)**Name of Inventor :**
(32) Priority Date	:NA	**1)Dr. Shanawaz Patil**
(33) Name of priority country	:NA	**2)Dr. Raju B. S**
(86) International Application No	:PCT//	**3)Prashanth D S**
Filing Date	:01/01/1900	**4)Mohammad Toufiq**
(87) International Publication No	: NA	**5)Peer Mohammed S N**
(61) Patent of Addition to Application Number	:NA	**6)Nithish S**
Filing Date	:NA	
(62) Divisional to Application Number	:NA	
Filing Date	:NA	

(57) Abstract :
The present investigation relates to IOT based, Solar powered and automated waste compactor to reduce the volume of waste accumulation. This system is developed to reduce the transportation cost in collection of waste and to accommodate the disposal in less area. This system consists of real time fill level monitoring and new waste management information system. The proposed system consists of Solar panel, Metal X-Frame, Ultrasonic sensors, Proximity Sensors, Arduino board, GPRS tracking chip, micro-controller, Batteries, Electric Motors. This system compactor is a machine utilized to diminish the size of material such as waste through compaction. A waste compactor is often used by a home or business to reduce the amount of waste. The system also possess the mobile charger port to charge the mobile phones. This is also contains the digital advertisement board to provide information™s to public.

No. of Pages : 4 No. of Claims : 3

(12) PATENT APPLICATION PUBLICATION
(21) Application No.202141030806 A
(19) INDIA
(22) Date of filing of Application :09/07/2021
(43) Publication Date : 16/07/2021

(54) Title of the invention : REGRESSION SYSTEM: REGRESSION ANALYSIS APPROACH FOR MATHEMATICAL MODEL DEVELOPMENT IN DYNAMIC SYSTEM

(51) International classification	:G06Q0010060000, G16H0030200000, G06F0017180000, G05B0017020000, G16B0030000000
(31) Priority Document No	:NA
(32) Priority Date	:NA
(33) Name of priority country	:NA
(86) International Application No	:PCT//
Filing Date	:01/01/1900
(87) International Publication No	: NA
(61) Patent of Addition to Application Number	:NA
Filing Date	:NA
(62) Divisional to Application Number	:NA
Filing Date	:NA

(71)**Name of Applicant :**
1)Dr. G. Murali (Professor)
Address of Applicant :Department of Mathematics Malla Reddy University, Maisammaguda (V), Medchal District, Telangana state, INDIA-500100. E-mail: muraligundagani@gmail.com Phone+91-9502861128 Telangana India
2)S. M Bhati (Assistant Professor)
3)Ms. Chinmayi Gundagani (Scholar)
4)Dr. Harish Nagar (Professor)
(72)**Name of Inventor :**
1)Dr. G. Murali (Professor)
2)S. M Bhati (Assistant Professor)
3)Ms. Chinmayi Gundagani (Scholar)
4)Dr. Harish Nagar (Professor)

(57) Abstract :
ABSTRACT Our invention Regression System: Regression Analysis Approach for Mathematical Model Development in Dynamic System is a proposed an approach using multiple regression analysis to develop a complex mathematical model that represents a dynamic manufacturing system. The Simulation data are specifically analyzed using this multiple regression analysis approach to obtain a data unique pattern. This approach reduces the gap between theory and real-time data of the system. To evaluate the effectiveness of the mathematical mode, simulation model was first validated using real-time data. The applicability of the proposed mathematical model was evaluated by testing with real-time data. The outcome positively demonstrated that the develop mathematical model based on multiple regression analysis approach can be used to make predictions in the dynamic manufacturing environment with an acceptable error percentage range. The mathematical development in this field will enhance the future establishment of a decision-making model using a spreadsheet in the management field.

No. of Pages : 23 No. of Claims : 4

(12) PATENT APPLICATION PUBLICATION
(19) INDIA
(22) Date of filing of Application :09/07/2021
(21) Application No.202141030807 A
(43) Publication Date : 16/07/2021

(54) Title of the invention : A SMART HEALTHCARE MONITORING SYSTEM USING INTERNET OF THINGS

(51) International classification	:G06Q0050220000, A61B0005020500, A61B0005010000, A61B0005000000, A61B0005024000
(31) Priority Document No	:NA
(32) Priority Date	:NA
(33) Name of priority country	:NA
(86) International Application No	:PCT//
Filing Date	:01/01/1900
(87) International Publication No	: NA
(61) Patent of Addition to Application Number	:NA
Filing Date	:NA
(62) Divisional to Application Number	:NA
Filing Date	:NA

(71)**Name of Applicant :**
1)Dr.N.KUMARESHAN
Address of Applicant :Associate Professor, Department of Electronics and Communication Engineering, Sri Shakthi Institute of Engineering and Technology (Autonomous), Chinniyampalayam, Coimbatore, Tamil Nadu, India - 641062 Tamil Nadu India
2)Dr.K.PUNITHA
3)Dr.SHAIFALI MADAN ARORA
4)Ms.POONAM KADIAN
5)Ms.ANSHUL PAREEK
6)Dr.C.RAMAKRISHNAN
7)Dr.R.KARTHICK
8)Dr.R.BALAMURUGAN
9)Dr.HITESH PANCHAL
10)Dr.SUMAN MANN
11)Dr.K.MAHENDRAN
12)Mr.RAGUPATHY SHANMUGA SUNDARAM

(72)**Name of Inventor :**
1)Dr.N.KUMARESHAN
2)Dr.K.PUNITHA
3)Dr.SHAIFALI MADAN ARORA
4)Ms.POONAM KADIAN
5)Ms.ANSHUL PAREEK
6)Dr.C.RAMAKRISHNAN
7)Dr.R.KARTHICK
8)Dr.R.BALAMURUGAN
9)Dr.HITESH PANCHAL
10)Dr.SUMAN MANN
11)Dr.K.MAHENDRAN
12)Mr.RAGUPATHY SHANMUGA SUNDARAM

(57) Abstract :
A SMART HEALTHCARE MONITORING SYSTEM USING INTERNET OF THINGS Healthcare monitoring system in hospitals and many other health centers has experienced significant growth, and portable healthcare monitoring systems with emerging technologies are becoming of great concern to many countries worldwide now-a-days. The advent of Internet of Things (IoT) technologies facilitates the progress of healthcare from face-to-face consulting to telemedicine. This paper proposes a smart healthcare system in IoT environment that can monitor a patient™s basic health signs as well as the room condition where the patients are now in real-time. In this system, five sensors are used to capture the data from hospital environment named heart beat sensor, body temperature sensor, room temperature sensor, CO sensor, and CO2 sensor. The error percentage of the developed scheme is within a certain limit (

No. of Pages : 24 No. of Claims : 10

(12) PATENT APPLICATION PUBLICATION
(19) INDIA
(22) Date of filing of Application :09/07/2021

(21) Application No.202141030825 A
(43) Publication Date : 16/07/2021

(54) Title of the invention : Intelligent IOT and 5G based patient care system

(51) International classification	:H04L0029080000, H04W0004700000, H04L0009060000, H04L0009320000, H04W0012080000
(31) Priority Document No	:NA
(32) Priority Date	:NA
(33) Name of priority country	:NA
(86) International Application No	:PCT//
Filing Date	:01/01/1900
(87) International Publication No	: NA
(61) Patent of Addition to Application Number	:NA
Filing Date	:NA
(62) Divisional to Application Number	:NA
Filing Date	:NA

(71)**Name of Applicant :**
1)Dr. P. Herbert Raj
Address of Applicant :Kalaimahal College of Arts and Science, Sembanarkoil, Tharangambadi Taluk, Naagappatinam - 609 309 Tamil Nadu India
2)Mrs. J.EVANGELIN JEBA
3)Mr. NARAYAN KRISHAN VYAS
4)Dr.R.Karthick
5)Mrs.S.Amudha
6)Dr.N.R.INDIRA
7)Mr.K.Pandiaraj
8)R.MOHAMMED ABDULLAH
9)Dr. GOPIKRISHNAN M
10)Mr. P.Selvaprasanth
11)Mrs.P.Meenalochini
(72)**Name of Inventor :**
1)Dr. P. Herbert Raj
2)Mrs. J.EVANGELIN JEBA
3)Mr. NARAYAN KRISHAN VYAS
4)Dr.R.Karthick
5)Mrs.S.Amudha
6)Dr.N.R.INDIRA
7)Mr.K.Pandiaraj
8)R.MOHAMMED ABDULLAH
9)Dr. GOPIKRISHNAN M
10)Mr. P.Selvaprasanth
11)Mrs.P.Meenalochini

(57) Abstract :
The 5G networks will be deployed worldwide. This 5G technology supports devices with fast network capacity expansion and excellent quality of service. Besides this, 5G offers other benefits regarding security, decentralization, transparency, and data interoperability. The 5G network is linked to millions of IoT devices. These gadgets are activated and operated at fast rates at more incredible speeds. In the present trend, Blockchain is an essential technology. Blockchain is utilized in other areas, including online payments, medical attention, intelligent contracts, etc. It may include additional functionalities to extend blockchain technology into the Internet of things (IoT). Security is the critical problem in 5 G technology since millions of IoT devices are linked, and data is transmitted more confidentially. Using blockchain technologies, this data should be secured. This method is suggested to protect the information in intelligent healthcare systems utilizing the 5G networks blockchain to prevent the fabrication of the data.

No. of Pages : 22 No. of Claims : 5

(12) PATENT APPLICATION PUBLICATION
(21) Application No.202141030897 A
(19) INDIA
(22) Date of filing of Application :09/07/2021
(43) Publication Date : 16/07/2021

(54) Title of the invention : MULTI SENSORY INPUT DATA EXCHANGE BY VIRTUAL REALITY OVER 5G

(51) International classification	:G06F0003010000, H04B0007024000, H04N0021000000, A47C0007720000, G06T0015100000	(71)**Name of Applicant :** **1)Dr.S.Jeyalakshmi** Address of Applicant :Asst. Professor (Sel.G), Department of Artificial Intellgence and Data Science, SRM Valliammai Engineering College, Chengalpattu-Dt, Pin - 603203. Tamil Nadu India
(31) Priority Document No	:NA	**2)Dr. S. Narayanan**
(32) Priority Date	:NA	**3)Dr. S. Sekar**
(33) Name of priority country	:NA	**4)Mr. R. Sankaranarayanan**
(86) International Application No	:PCT//	(72)**Name of Inventor :**
Filing Date	:01/01/1900	**1)Dr.S.Jeyalakshmi**
(87) International Publication No	: NA	**2)Dr. S. Narayanan**
(61) Patent of Addition to Application Number	:NA	**3)Dr. S. Sekar**
Filing Date	:NA	**4)Mr. R. Sankaranarayanan**
(62) Divisional to Application Number	:NA	
Filing Date	:NA	

(57) Abstract :
People nowadays are ecstatic to be able to live in a virtual world full of infinite thrills. As a result, virtual reality is an immersive sensory experience in which the distant world is digitally stimulated to make human brains think the virtual environment is a real one. Virtual reality is widely utilized in a variety of areas, including healthcare where professionals are taught using VR, medical where operations are performed and rehearsed in the virtual world, gaming, and theatre, among others. Because of its capacity to provide high-definition (HD) video services, virtual reality is quickly becoming one of the most important applications in the future fifth generation. Though the 5G core provides wireless connection and an improved VR user experience, a multipoint cooperative transmission method is suggested for VR applications over 5G to satisfy reduced latency and large data transfer from many sensors. As virtual reality becomes more popular, there is a significant rise in wireless data traffic, as well as a need for single user to multiuser with multi-input to multi output to satisfy the demand for greater data rate transmission. With the assistance of numerous sensors, the virtual reality system gathers visual, auditory, tactile, olfactory, gustatory, and, on rare occasions, nociceptive (painful) stimuli and communicates the data through multipoint cooperative transmission. Multiple point-to-point radio connections, including links inside a virtual array and potentially links between virtual arrays, are used in a cooperative multipoint broadcast. This technique is used to create a three-dimensional computer-generated environment that allows the user to interact with it.

No. of Pages : 15 No. of Claims : 5

(12) PATENT APPLICATION PUBLICATION
(19) INDIA
(22) Date of filing of Application :09/07/2021

(21) Application No.202141030909 A
(43) Publication Date : 16/07/2021

(54) Title of the invention : A NOVEL AUTONOMIC ARCHITECTURE TO ASSURE SECURITY IN CLOUD ENVIRONMENTS

(51) International classification	:H04L0029060000, H04W0016180000, G06Q0010060000, C12R0001010000, H04N0021234300
(31) Priority Document No	:NA
(32) Priority Date	:NA
(33) Name of priority country	:NA
(86) International Application No	:NA
Filing Date	:NA
(87) International Publication No	: NA
(61) Patent of Addition to Application Number	:NA
Filing Date	:NA
(62) Divisional to Application Number	:NA
Filing Date	:NA

(71)**Name of Applicant :**
1)Dr. V. VIJAYASRI BOLISETTY
Address of Applicant :ASSOCIATE PROFESSOR, DEPARTMENT OF ELECTRONICS AND COMMUNICATION ENGINEERING, ADITYA COLLEGE OF ENGINEERING AND TECHNOLOGY, ADB RD, SURAMPALEM, ANDHRA PRADESH- 533437 Andhra Pradesh India
2)Mr. MUKUL ARORA
3)Dr.A.PETER SOOSAI ANANDARAJ
4)Mr. MUTHAIAH. U
5)Dr. S S P M SHARMA B
6)Mr. T CH ANIL KUMAR
7)Dr.RESHMI B
8)Dr. JOSE ANAND
9)Dr. R. MURUGESAN
10)Dr.S. DEVI
11)Mr.M. BARATH SHABARI
(72)**Name of Inventor :**
1)Dr. V. VIJAYASRI BOLISETTY
2)Mr. MUKUL ARORA
3)Dr.A.PETER SOOSAI ANANDARAJ
4)Mr. MUTHAIAH. U
5)Dr. S S P M SHARMA B
6)Mr. T CH ANIL KUMAR
7)Dr.RESHMI B
8)Dr. JOSE ANAND
9)Dr. R. MURUGESAN
10)Dr.S. DEVI
11)Mr.M. BARATH SHABARI

(57) Abstract :
A security policy evaluation method has also been introduced. This assessment is based on scheduling scores allowing the security expert to rank the available security mechanisms and the different algorithms to select the ideal combination for a property on a given system. The scheduling scores are then used to set the property and policy enforcement scores. The quality of the policy enforcement can then be determined by using this enforcement score and associating it with the coverage rate and the property coverage rate. It is thus possible to determine whether the policy has been fully applied and whether its application can be improved on a given node. In addition, applications of the same policy on different nodes can be compared, allowing different environments to be compared against a security policy.

No. of Pages : 25 No. of Claims : 4

(12) PATENT APPLICATION PUBLICATION
(21) Application No.202141030934 A
(19) INDIA
(22) Date of filing of Application :09/07/2021
(43) Publication Date : 16/07/2021

(54) Title of the invention : Design and Development of Multifunctional Automated Home Security System

(51) International classification	:G08B0019000000, G08B0013196000, H04L0012280000, G08B0025000000, G08B0021220000
(31) Priority Document No	:NA
(32) Priority Date	:NA
(33) Name of priority country	:NA
(86) International Application No	:PCT//
Filing Date	:01/01/1900
(87) International Publication No	: NA
(61) Patent of Addition to Application Number	:NA
Filing Date	:NA
(62) Divisional to Application Number	:NA
Filing Date	:NA

(71)**Name of Applicant :**
1)Dr. Hemant Kumar Gupta
Address of Applicant :Vaagdevi College of Engineering Bollikunta, Warangal-Khammam Highway Warangal, Telangana Telangana India
2)Dr. M. Shashidhar
3)Dr. Pankaj H. Rangaree
4)Dr. Nishu Gupta
5)Nagaraju Devulapally
6)Karra Akhila Reddy
7)Manasa Mididhoddi
8)Pilli Rajanandini
9)Manichandra Maddi
(72)**Name of Inventor :**
1)Dr. Hemant Kumar Gupta
2)Dr. M. Shashidhar
3)Dr. Pankaj H. Rangaree
4)Dr. Nishu Gupta
5)Nagaraju Devulapally
6)Karra Akhila Reddy
7)Manasa Mididhoddi
8)Pilli Rajanandini
9)Manichandra Maddi

(57) Abstract :
ABSTRACT Security is one of the main concerns of present day. Home Security can be achieved by adopting central controllers to control home devices or appliances that sense different variables using appropriate sensors. The main aspect of such a system uses sensory system that collects the parameter information like temperature, fire, Human Presence, Trespassing and sends the corresponding data to the microcontroller. This invention integrates the features of home automation with that of security system to build concrete home control System. The main aim of this invented system is to provide an assurance of instantaneous alert in the form of SMS notification on user registered cell phone number for any threat to the security at home of the user. Threat to security can be in the form of trespassing, burglary, gas leakage or fire. This project consists of three modules along with a GSM modem. GSM modem is used to send the message to the respected authorities whenever there are changes in any of the three modules. The First module of this system serves the functionality of door latch opening using password entered through keyboard. If more than three attempts are made emergency signal will be sounded. The second module consists of intruder checkers which consists of IR sensor to detect the presence of the person inside the door. The third module is the fire detection module which consists of the temperature sensor. This security system uses 8051 microcontroller which is pre-programmed such a way that whenever the parameters crosses their specified limit, then it sends the control signal to various controlling devices.

No. of Pages : 21 No. of Claims : 8

(12) PATENT APPLICATION PUBLICATION
(21) Application No.202141030948 A
(19) INDIA
(22) Date of filing of Application :09/07/2021
(43) Publication Date : 16/07/2021

(54) Title of the invention : METHOD OF INDICATING HIGH PRESSURE USING PRESSURE SENSING FOOTWEAR

(51) International classification	:A61B0005000000, G08B0021020000, A43B0007000000, A61B0005103000, A61B0005026000
(31) Priority Document No	:NA
(32) Priority Date	:NA
(33) Name of priority country	:NA
(86) International Application No	:NA
Filing Date	:NA
(87) International Publication No	: NA
(61) Patent of Addition to Application Number	:NA
Filing Date	:NA
(62) Divisional to Application Number	:NA
Filing Date	:NA

(71)**Name of Applicant :**
1)Revati Varma
Address of Applicant :Swathy,TPK Nair Road, Chevayur PO, Thondayad, Calicut Tamil Nadu India
2)Viswanath Narendiran
3)Alisha Kalyanpur
(72)**Name of Inventor :**
1)Revati Varma
2)Viswanath Narendiran
3)Alisha Kalyanpur

(57) Abstract :
ABSTRACT Method of indicating high pressure using pressure sensing footwear comprises multiple pressure sensors fixed to insole with Bluetooth connection and mobile application for sensing the body pressure. The said insole creates a profile picture of feet of the user using the said mobile application and indicates the normal body pressure in green. The insole is also attached with blood flow indicator and transcutaneous oxygenation monitor for monitoring the blood circulation in foot of the user. The said insole indicates the high pressure in red color and an alarm by transmitting the signal to attached mobile application through Bluetooth. The Present invention is a simple and cost effective method for protecting the diabetic patient from foot ulcer.

No. of Pages : 14 No. of Claims : 7

(12) PATENT APPLICATION PUBLICATION
(21) Application No.202141030976 A
(19) INDIA
(22) Date of filing of Application :09/07/2021
(43) Publication Date : 16/07/2021

(54) Title of the invention : SYSTEM AND METHOD FOR MANAGING RUMORS THROUGH NON-SHAREABLE FILE

(51) International classification	:G06F0012081500, G16H0040630000, G06F0012086600, H04N0021222000, G06F0030390000	(71)**Name of Applicant :** **1)Dr. DINESHA H A** Address of Applicant :#S3, Moon Residency, Plot 628, CTS 8174, Sector 5, Shreenagar, Belagavi, Karnataka -590016 India Karnataka India
(31) Priority Document No	:NA	(72)**Name of Inventor :**
(32) Priority Date	:NA	**1)Dr. DINESHA H A**
(33) Name of priority country	:NA	
(86) International Application No	:PCT//	
Filing Date	:01/01/1900	
(87) International Publication No	: NA	
(61) Patent of Addition to Application Number	:NA	
Filing Date	:NA	
(62) Divisional to Application Number	:NA	
Filing Date	:NA	

(57) Abstract :
ABSTRACT SYSTEM AND METHOD FOR MANAGING RUMORS THROUGH NON-SHAREABLE FILE A computing system for ensuring non-spreading of rumors over digital platforms, the rumor management system (100) comprising: a reading module (202) configured to read the attributes associated with a file, wherein the attributes are selected from, read, write, forward, or a combination thereof; an attribute modifying module (204) configured to modify the attributes of the file; and an update module (206) configured to update the file attribute with the modified attributes. Further, the rumor management system (100) comprises a file access module (200) that may be configured to access the files from the storage of a user device (102).

No. of Pages : 16 No. of Claims : 6

(12) PATENT APPLICATION PUBLICATION
(21) Application No.202141030978 A
(19) INDIA
(22) Date of filing of Application :09/07/2021
(43) Publication Date : 16/07/2021

(54) Title of the invention : AUTHENTICATION USING CANCELABLE FINGERPRINT APPLYING BIOHASHING

(51) International classification	:H04L0009320000, H04L0029060000, G06F0021460000, H04L0009080000, G06F0021310000
(31) Priority Document No	:NA
(32) Priority Date	:NA
(33) Name of priority country	:NA
(86) International Application No	:NA
Filing Date	:NA
(87) International Publication No	: NA
(61) Patent of Addition to Application Number	:NA
Filing Date	:NA
(62) Divisional to Application Number	:NA
Filing Date	:NA

(71)**Name of Applicant :**
1)Ms. Mamatha K R
Address of Applicant :Assistant Professor, Dept. of Information Science and Engineering, B.M.S. College of Engineering, Bangalore-560019 Karnataka India
2)Dr. Sheela S V
3)Dr. Radhika K R
(72)**Name of Inventor :**
1)Ms. Mamatha K R
2)Dr. Sheela S V
3)Dr. Radhika K R

(57) Abstract :
ABSTRACT Hardy and resilient systems can be developed by using complex methods such as hashing and salting. Salted password hashing method is employed to protect passwords against different types of attacks namely brute-force attack, dictionary attack, rainbow table attacks. Salting claims that random data can be added to the input of the hash function to ensure a unique output even if the input is the same. Hashing salts are speed bumps in an attacker™s road to breach user™s data. Primary Concept of authentication is to use inherent link feature with anthropoid users instead of a few exterior details such as tokens or passwords to authenticate users. Drawback of Password or token is that it can be easily stolen or forgotten. To achieve the advantages of protection or comfort or both, a more realistic solution is to combine two or more factor validators. This Invention proposes a contemporary two factor authenticator called Biohashing which is an approach inspired from password salting method that furnish good revocability properties to generate fingercode.

No. of Pages : 10 No. of Claims : 1

(12) PATENT APPLICATION PUBLICATION
(19) INDIA
(22) Date of filing of Application :09/07/2021
(21) Application No.202141030979 A
(43) Publication Date : 16/07/2021

(54) Title of the invention : LOW COST ELECTRONICALLY COMMUTATED MIXER GRINDER ABSTRACT

(51) International classification	:H02P0025140000, F04D0029420000, H02K0007140000, F04D0025060000, H02P0006140000
(31) Priority Document No	:NA
(32) Priority Date	:NA
(33) Name of priority country	:NA
(86) International Application No	:NA
Filing Date	:NA
(87) International Publication No	: NA
(61) Patent of Addition to Application Number	:NA
Filing Date	:NA
(62) Divisional to Application Number	:NA
Filing Date	:NA

(71)**Name of Applicant :**
1)Anandu Ajayan, TKM College of Engineering
Address of Applicant :Under graduate student, Electrical and Electronics Engineering, TKM College of Engineering, TKM College of Engineering, Karicode, Kollam-691005, Kerala, India ananduajayan142000@gmail.com 7025601877 Kerala India
2)Ajay Babu Anilbabu, TKM College of Engineering
3)Athul Krishnan, TKM College of Engineering
4)Nevin Binu, TKM College of Engineering
5)Sheik Mohammed S, TKM College of Engineering
6)Sunitha Beevi K, TKM College of Engineering
7)TKM College of Engineering
(72)**Name of Inventor :**
1)Anandu Ajayan, TKM College of Engineering
2)Ajay Babu Anilbabu, TKM College of Engineering
3)Athul Krishnan, TKM College of Engineering
4)Nevin Binu, TKM College of Engineering
5)Sheik Mohammed S, TKM College of Engineering
6)Sunitha Beevi K, TKM College of Engineering
7)TKM College of Engineering

(57) Abstract :
This project proposes the design of a low cost electronically commutated motor as a replacement for universal motor in mixer grinder. The problems associated with universal motors are its low efficiency (in the range of 40% to 55%); it requires proper repair and maintenance because the carbon brushes and commutator have limited life. Universal motors have higher noise associated with them due to mechanical commutation. Hence, there is a need for finding a substitute for universal motor. BLDC motor is an ergonomic replacement for universal motor, since it has high efficiency (85-90%), good starting torque, can run at high speed, high torque to weight ratio, increased reliability, reduced noise, longer life time, low maintenance etc. But, its cost made it an unfeasible solution for mixer grinder application. Here, a modified version of conventional BLDC motor without comprising the performance but at low cost is proposed.

No. of Pages : 10 No. of Claims : 5

(12) PATENT APPLICATION PUBLICATION
(21) Application No.202141030992 A
(19) INDIA
(22) Date of filing of Application :09/07/2021
(43) Publication Date : 16/07/2021

(54) Title of the invention : APPROACH FOR AGE ESTIMATION SYSTEM USING FACE IMAGES

(51) International classification	:G06K0009000000, G06K0009620000, G06F0021320000, G06K0009460000, G06T0011600000
(31) Priority Document No	:NA
(32) Priority Date	:NA
(33) Name of priority country	:NA
(86) International Application No	:NA
Filing Date	:NA
(87) International Publication No	: NA
(61) Patent of Addition to Application Number	:NA
Filing Date	:NA
(62) Divisional to Application Number	:NA
Filing Date	:NA

(71)**Name of Applicant :**
1)Dr.Santhosh Kumar G
Address of Applicant :Principal/Director East West College of Engineering, CA Site No. 13, 13th A Main Road, Sector A, Major Akshay Kumar Road, Yelahanka New Town, Bengaluru-560064 Karnataka India
(72)**Name of Inventor :**
1)Dr.Santhosh Kumar G

(57) Abstract :
Age Estimation (AE) identifies a person™s age or age group utilizing facial images and has several real-time applications such as biometric authentication, computer vision, etc. Generally, AE algorithms are split into five main stages such as detecting the face in the input image, cropping the background from the face image, extracting features from the cropped face, reducing the dimensions of the feature vectors to a lower dimensionality and training the learning machines with the reduced feature vectors and corresponding labels

No. of Pages : 10 No. of Claims : 1

(12) PATENT APPLICATION PUBLICATION
(19) INDIA
(22) Date of filing of Application :09/07/2021
(21) Application No.202141030994 A
(43) Publication Date : 16/07/2021

(54) Title of the invention : A SYSTEM AND METHOD BASED ON NEURAL NETWORK AND HIDDEN MARKOV MODELLING FOR PREDICTING DRUG PROPERTY •

(51) International classification	:G06N0003040000, G16C0020300000, G16B0015000000, G16C0020500000, G16B0020000000
(31) Priority Document No	:NA
(32) Priority Date	:NA
(33) Name of priority country	:NA
(86) International Application No	:NA
Filing Date	:NA
(87) International Publication No	: NA
(61) Patent of Addition to Application Number	:NA
Filing Date	:NA
(62) Divisional to Application Number	:NA
Filing Date	:NA

(71)**Name of Applicant :**
1)Mr.Katikireddy Srinivas
Address of Applicant :Professor, Department of CSE, Bonam Venkata Chalamayya Engineering College, Odalarevu, Amalapuram, Andhra Pradesh, India. Pin Code:533210 Andhra Pradesh India
2)Dr.Hiren Madhukar Dekate
3)Dr.Sagaya Aurelia
4)Mr.Boggarapu Srinivasulu
5)Dr.S.Selvakanmani
6)Dr.Keerthika T
7)Dr.Sushma Jaiswal
8)Mr.Tarun Jaiswal
9)Dr.M.Sunil Kumar
10)Dr.Animesh Kumar Sharma
(72)**Name of Inventor :**
1)Mr.Katikireddy Srinivas
2)Dr.Hiren Madhukar Dekate
3)Dr.Sagaya Aurelia
4)Mr.Boggarapu Srinivasulu
5)Dr.S.Selvakanmani
6)Dr.Keerthika T
7)Dr.Sushma Jaiswal
8)Mr.Tarun Jaiswal
9)Dr.M.Sunil Kumar
10)Dr.Animesh Kumar Sharma

(57) Abstract :
[027] The present invention discloses a system and method based on neural network and Hidden Markov modelling for predicting drug property. The system, includes, but not limited to, a convolutional neural network based molecular descriptor modules associated with molecular docking data for the involved molecule; at least one processing unit provided in a computer network or on a clod server to evaluate one or more three-dimensional (3D) conformations of the docking molecules; a Hidden Markov Modelling (HMM) module provided with training the convolutional neural network for determining a plurality of features that affect energies of the one or more 3D conformations of the docking molecules. Accompanied Drawing [FIG. 1]

No. of Pages : 19 No. of Claims : 8

(12) PATENT APPLICATION PUBLICATION
(21) Application No.202141031009 A
(19) INDIA
(22) Date of filing of Application :10/07/2021
(43) Publication Date : 16/07/2021

(54) Title of the invention : VAHAN SURVEILLANCE AND INFO-RETRIEVAL SYSTEM

(51) International classification :H04N0007180000, G06Q0050260000, G07C0009000000, G08B0025080000, G07C0005000000
(31) Priority Document No :NA
(32) Priority Date :NA
(33) Name of priority country :NA
(86) International Application No :NA
Filing Date :NA
(87) International Publication No : NA
(61) Patent of Addition to Application Number :NA
Filing Date :NA
(62) Divisional to Application Number :NA
Filing Date :NA

(71)**Name of Applicant :**
1)Dr.VIMALA.S
Address of Applicant :19 James street, Poonamallee Chennai Tamilnadu India 600056 Tamil Nadu India
2)Dr.VANITHA.L
3)Mr.PADMANABAN.L
4)Dr.SHOBA.B
5)Mr.NIVAS KUMAR N
6)Ms.Y. VIJAYA SHRI
7)Ms.N VARSHINI
8)P. PAVITHRA SATHVIKA
9)Mr.TADAVARTHI VENKATA SAI PRAMOD
10)Mr.KETHA REDDYSAI
(72)**Name of Inventor :**
1)Dr.VIMALA.S
2)Dr.VANITHA.L
3)Mr.PADMANABAN.L
4)Dr.SHOBA.B
5)Mr.NIVAS KUMAR N
6)Ms.Y. VIJAYA SHRI
7)Ms.N VARSHINI
8)Dr.VIMALA.S
9)Dr.VANITHA.L
10)Mr.PADMANABAN.L
11)Dr.SHOBA.B
12)Mr.NIVAS KUMAR N
13)Ms.Y. VIJAYA SHRI
14)Ms.N VARSHINI
15)P. PAVITHRA SATHVIKA
16)Mr.TADAVARTHI VENKATA SAI PRAMOD
17)Mr.KETHA REDDYSAI

(57) Abstract :
With the increasing population every year, the need to ensure the safety and security of people is also increasing. A larger population is residing in many apartment complexes in and around the cities. And hundreds of vehicles are parked and departed daily in various parking areas. Thus, with the increase in vehicle movements, there is a need for regular vehicle tracking and monitoring systems to ensure safety and security in apartment complexes and parking areas. As the number of residents increases, the chances of crime also increase. To ensure safety and security, depending on manual skills alone is inefficient. While CCTVs alone are not good at preventing crimes, they can only document them. The proposed solution will maintain a separate database that contains the details of the resident, their vehicle, their driver, and their frequent visitor™s details. When any vehicle enters or leaves the premises, the proposed system extracts the license plate number of the vehicle appearing in CCTV footage by image processing-based algorithm using LabVIEW. For faster and efficient identification, QR code scanning has also included. The vehicle and owner are identified through the VAHAN web portal containing the information of all registered vehicles. A message will be sent to the nearby police station or control room through the GSM module if any theft vehicle has been encountered. Similarly, a message will be sent to the respective owner or resident whenever any vehicle enters and departs from the premises. In case of any new visitor, the vehicle™s QR code will be scanned and checked if it is a valid registered vehicle, and details will be entered into the database and also a message will be sent to the respective resident intimating about the new visitor. By this, safety and security can be ensured

No. of Pages : 8 No. of Claims : 5

(12) PATENT APPLICATION PUBLICATION
(19) INDIA
(22) Date of filing of Application :10/07/2021
(21) Application No.202141031010 A
(43) Publication Date : 16/07/2021

(54) Title of the invention : SYSTEM AND METHOD FOR AUDIO AND VIDEO INPUT BASED DATA PROCESSING AND COMMUNICATION

(51) International classification :G06F0003140000, G06F0013160000, G06F0003050000, G05B0019414000, H04N0021475000
(31) Priority Document No :NA
(32) Priority Date :NA
(33) Name of priority country :NA
(86) International Application No :NA
Filing Date :NA
(87) International Publication No : NA
(61) Patent of Addition to Application Number:NA
Filing Date :NA
(62) Divisional to Application Number :NA
Filing Date :NA

(71)**Name of Applicant :**
1)Ms Ramya G Franklin
Address of Applicant :Department of Computer Science and Engineering, Sathyabama Institute of Science and Technology, Jeppiaar Nagar, Rajiv Gandhi Road, Chennai, Tamil Nadu, India, 600 119 Tamil Nadu India
2)Dr S Gowri
3)Dr J Jabez
4)Dr S Murugan
5)Dr V Ulagamuthalvi
6)Dr B Muthu Kumar
7)Dr G Mathivanan
8)Dr R Jeberson Retna Raj
9)Dr A Sivasangari
10)Dr P Ajitha
11)Dr Senduru Srinivasulu
(72)**Name of Inventor :**
1)Ms Ramya G Franklin
2)Dr S Gowri
3)Dr J Jabez
4)Dr S Murugan
5)Dr V Ulagamuthalvi
6)Dr B Muthu Kumar
7)Dr G Mathivanan
8)Dr R Jeberson Retna Raj
9)Dr A Sivasangari
10)Dr P Ajitha
11)Dr Senduru Srinivasulu

(57) Abstract :
The various embodiments of the present invention provide a system for audio-visual input-based data processing and communication. The system comprises an input hub, a signal processing unit, a command generator and an enactment unit. The input hub is connected to at least one external audio and video input device. The signal processing unit is connected to the input hub and is an analog signal processor. The command generator is connected to the signal processing unit through a command bus and a feedback channel. The enactment unit is connected to the command generator through a bidirectional data bus.

No. of Pages : 13 No. of Claims : 9

(12) PATENT APPLICATION PUBLICATION
(21) Application No.202141031012 A
(19) INDIA
(22) Date of filing of Application :10/07/2021
(43) Publication Date : 16/07/2021

(54) Title of the invention : AN IMAGING SYSTEM FOR 3-DIMENSIONAL PROFILE, FULL-FIELD DISPLACEMENT AND STRAIN MAPPING AND A METHOD THEREOF

(51) International classification	:G01B0011160000, G01B0011020000, G01B0011060000, H04N0005225000, G01B0011240000
(31) Priority Document No	:NA
(32) Priority Date	:NA
(33) Name of priority country	:NA
(86) International Application No	:NA
Filing Date	:NA
(87) International Publication No	: NA
(61) Patent of Addition to Application Number	:NA
Filing Date	:NA
(62) Divisional to Application Number	:NA
Filing Date	:NA

(71)**Name of Applicant :**
1)Indian Space Research Organisation
Address of Applicant :Department of Space, Antariksh Bhavan, New BEL Road, Bangalore - 560094, Karnataka, India. Karnataka India

(72)**Name of Inventor :**
1)SWAIN, Digendranath
2)THOMAS, Binu Panackaparambil
3)SHUNMUGAVEL, Karthigai Selvan
4)PHILIP, Jeby

(57) Abstract :
The present disclosure provides for an imaging system for non-contact, non-destructive, remote, in-situ and real-time measurement of 3-D profile, object distance/depth, full-field displacement field and surface strain fields on specimens, components and structures. The system comprises of a housing; a camera sensor; optical lens; beam splitter cube; at least two monochromatic filters; a reflector; a plurality of white/monochromatic light sources; a location template generation mechanism; analog electronic input source or plurality of sources; set of cables connecting the camera sensor and the analog inputs to a computing device; image acquisition module; image processing module. The present disclosure also provides a method for measuring 3-D profile, object distance or depth, displacement and strain fields on the surface of said object/specimen.

No. of Pages : 49 No. of Claims : 15

(12) PATENT APPLICATION PUBLICATION
(21) Application No.202141031029 A
(19) INDIA
(22) Date of filing of Application :10/07/2021
(43) Publication Date : 16/07/2021

(54) Title of the invention : A VIRTUAL QUEUE SYSTEM WITH A MACHINE LEARNING MODULE •

(51) International classification	:G06N0020000000, G06F0009455000, G07C0011000000, G06Q0010020000, G09G0005000000	(71)**Name of Applicant :** **1)K.S. Rangasamy College of Technology** Address of Applicant :K.S.Rangasamy College of Technology, KSR Kalvi Nagar, Tiruchengode- 637 215 Tamil Nadu India
(31) Priority Document No	:NA	(72)**Name of Inventor :**
(32) Priority Date	:NA	**1)Dr.R.Gopalakrishnan**
(33) Name of priority country	:NA	**2)N.Giridharan**
(86) International Application No	:NA	**3)Dr.R.Dhanalakshmi**
Filing Date	:NA	**4)Dr. S. Thangavel**
(87) International Publication No	: NA	
(61) Patent of Addition to Application Number	:NA	
Filing Date	:NA	
(62) Divisional to Application Number	:NA	
Filing Date	:NA	

(57) Abstract :
A VIRTUAL QUEUE SYSTEM WITH A MACHINE LEARNING MODULE [027] The present invention discloses a virtual queue system with a machine learning module. The virtual queue system with a machine learning module when there are more than two or more queue numbers and service windows, includes one or more processing units placed in a cloud network, to receive a request from a user through a user interface provided on a user device of the user, wherein on receiving the request from the user, a scheduler module schedule the position of the user at the customer relation windows such as railway reservation windows. Further, the machine learning module determines the total time to reach to a service window after calculating the time consumption of other users in the queue. Each user is associated with varied required service and the time is calculated on the basis of the kind of service is required by the user. Accompanied Drawing [FIG. 1]

No. of Pages : 20 No. of Claims : 6

(12) PATENT APPLICATION PUBLICATION
(21) Application No.202141031030 A
(19) INDIA
(22) Date of filing of Application :10/07/2021
(43) Publication Date : 16/07/2021

(54) Title of the invention : TEACHABLE OXYGEN FLOW CONTROL AND MONITORING SYSTEM

(51) International classification	:A61M0016060000, A61M0016100000, A61B0005000000, A61M0016000000, A61B0005024000
(31) Priority Document No	:NA
(32) Priority Date	:NA
(33) Name of priority country	:NA
(86) International Application No	:NA
Filing Date	:NA
(87) International Publication No	: NA
(61) Patent of Addition to Application Number	:NA
Filing Date	:NA
(62) Divisional to Application Number	:NA
Filing Date	:NA

(71)**Name of Applicant :**
1)Ravuri Daniel
Address of Applicant :AssociateProfessor, Departmentof Computer Science and Engineering, Bapatla Engineering College, Bapatla 522101, Andhra Pradesh, India Andhra Pradesh India
2)Ratna Sunil Buradagunta
3)Pitta Sundara Kumar
(72)**Name of Inventor :**
1)Ravuri Daniel
2)Ratna Sunil Buradagunta
3)Pitta Sundara Kumar
4)Bode Prasad
5)Domala Kishore Babu
6)Teki Satyanarayana Murthy
7)Prudhvi Kiran Pasam

(57) Abstract :
The present invention discloses a teachable system that learns by itself through data acquisition from the patients, dynamically monitors, analyses and controls the oxygen flow to the patients suffering from hypoxia. The disclosed system contains hardware that includes oxygen concentrator, oxygen flow and pulse rate measuring sensors, a control system, oxygen demand display unit and motors to control the valves. All the components of the system are integrated with an Artificial Intelligent (AI) agent. The data of oxygen levels and pulse rate of the patient is continuously supplied to the AI agent and the oxygen demand is predicted. Then the AI agent takes appropriate decision to decrease or increase the flow of the oxygen by controlling the flow valves to supply appropriate amount of oxygen to the patient. The AI agent also displays the analytics of oxygen consumption by the patient on the monitor which helps to assess the recovery rate of the patient and health condition of the patient.

No. of Pages : 23 No. of Claims : 6

(12) PATENT APPLICATION PUBLICATION
(19) INDIA
(22) Date of filing of Application :10/07/2021
(21) Application No.202141031063 A
(43) Publication Date : 16/07/2021

(54) Title of the invention : A SYSTEM AND METHOD FOR ANALYSING BIOLOGICAL EFFECTS OF MOLECULES USING MONTE CARLO METHOD

(51) International classification	:G06N0020000000, C12Q0001682700, A61K0031120000, A61K0031166000, G16B0020000000
(31) Priority Document No	:NA
(32) Priority Date	:NA
(33) Name of priority country	:NA
(86) International Application No	:PCT//
Filing Date	:01/01/1900
(87) International Publication No	: NA
(61) Patent of Addition to Application Number	:NA
Filing Date	:NA
(62) Divisional to Application Number	:NA
Filing Date	:NA

(71)**Name of Applicant :**
1)Prof.G.Shankar Lingam
Address of Applicant :Dean, Faculty of Engineering and Technology, Professor in Computer Science and Engineering, Chaitanya (Deemed to be University), Hanamkonda, Warangal Urban, Telangana, India. Pin Code506001 Telangana India
2)Dr.S.Venkatesa Prabhu
3)Dr.Seetharam Khetavath
4)Mr.Pradeep Raj Savarapu
5)Mrs.P.Neelima
6)Dr.Sushma Jaiswal
7)Mr.Tarun Jaiswal
8)Dr.Rabinarayan Satpathy
9)Dr.Dumpa Prasad
10)Mr.Anup Dnyaneshwar Bhange
(72)**Name of Inventor :**
1)Prof.G.Shankar Lingam
2)Dr.S.Venkatesa Prabhu
3)Dr.Seetharam Khetavath
4)Mr.Pradeep Raj Savarapu
5)Mrs.P.Neelima
6)Dr.Sushma Jaiswal
7)Mr.Tarun Jaiswal
8)Dr.Rabinarayan Satpathy
9)Dr.Dumpa Prasad
10)Mr.Anup Dnyaneshwar Bhange

(57) Abstract :
A SYSTEM AND METHOD FOR ANALYSING BIOLOGICAL EFFECTS OF MOLECULES USING MONTE CARLO METHOD [029] The present invention discloses a system and method for analysing biological effects of molecules using Monte Carlo method. The system, includes, but not limited to, a processing unit for determining whether a plurality of interacting molecules has a biological effect selected from a group consisting of an antibacterial effect, an antiviral effect and an anticancer effect; a plurality of machine learning (ML) and Artificial Intelligence (AI) modules for data modelling of identity of a sample chemical composition of the interacting molecules in conjunction with a Monte Carlo based Processing module. Accompanied Drawing [FIG. 1]

No. of Pages : 19 No. of Claims : 9

(12) PATENT APPLICATION PUBLICATION
(19) INDIA
(22) Date of filing of Application :11/07/2021
(21) Application No.202141031067 A
(43) Publication Date : 16/07/2021

(54) Title of the invention : INFLUENCE OF SULFUR-GOLD NANOSCRUBBERS FOR AMMONIA PRODUCTION BY ELECTROCHEMICAL METHOD

(51) International classification	:B01J0035000000, H01M0008083000, H01L0021768000, H01M0008220000, F01N0003280000
(31) Priority Document No	:NA
(32) Priority Date	:NA
(33) Name of priority country	:NA
(86) International Application No	:NA
Filing Date	:NA
(87) International Publication No	: NA
(61) Patent of Addition to Application Number	:NA
Filing Date	:NA
(62) Divisional to Application Number	:NA
Filing Date	:NA

(71)**Name of Applicant :**
1)Dr. R. Dhilip Kumar
Address of Applicant :Assistant Professor, Center for Nanoscience and Technology, Chennai Institute of Technology, Kundrathur, Chennai“ 600 069, Tamil Nadu, India. Tamil Nadu India
2)Dr. Balamurali Ramakrishnan
3)Dr. Cyril Robinson Azariah John Chelliah
4)Mr. Napolean. A
5)Dr. Dhinakaran Veeman
6)Dr. K. Sreevani
7)Dr. S. Nagarani
8)Dr. V. Shanmugavalli
9)Dr. A. Swetha
10)Mr. V .V Anierudhe
(72)**Name of Inventor :**
1)Dr. R. Dhilip Kumar
2)Dr. Balamurali Ramakrishnan
3)Dr. Cyril Robinson Azariah John Chelliah
4)Mr. Napolean. A
5)Dr. Dhinakaran Veeman
6)Dr. K. Sreevani
7)Dr. S. Nagarani
8)Dr. V. Shanmugavalli
9)Dr. A. Swetha
10)Mr. V .V Anierudhe

(57) Abstract :
The electrochemical NRR is a very advanced strategy compared to the Haber-Bosch (H-B) process used for ammonia (NH3) production. The synthesis of excellent performance electro-catalysts is the supreme crucial concern for electrochemical NRR. Herein, we propose the two-pot preparation route for the formation of S-Au nanoscrubbers with sulfur as dopant embedded onto Au lattice and NaBH4 was used as the reductant for formation of Au nanoscrubbers. Since, sulfur forms very thin nanoscrubbers network structure with Au metallic composition, the S-Au nanoscrubbers exhibit superb NRR performance with the high catalytic performance yield of 25.0 µg h-1 mg-1cat. of NH3 and with FE of 13.0% at - 0.2 V. The increase in the catalytic and Fes of sulfur combined Au metallic nanoscrubbers is due to more active sites and excellent stability in NRR.

No. of Pages : 19 No. of Claims : 5

(12) PATENT APPLICATION PUBLICATION
(21) Application No.202141031069 A
(19) INDIA
(22) Date of filing of Application :11/07/2021
(43) Publication Date : 16/07/2021

(54) Title of the invention : DIAGNOSIS AND MANAGEMENT OF PARKINSON'S DISEASE

(51) International classification	:A61K0031198000, A61K0045060000, A61K0045000000, A61H0001000000, A61N0002000000
(31) Priority Document No	:NA
(32) Priority Date	:NA
(33) Name of priority country	:NA
(86) International Application No	:NA
Filing Date	:NA
(87) International Publication No	: NA
(61) Patent of Addition to Application Number	:NA
Filing Date	:NA
(62) Divisional to Application Number	:NA
Filing Date	:NA

(71)**Name of Applicant :**
1)Dr. Prathap Suganthirababu
Address of Applicant :Professor & Vice-Principal, Saveetha College of Physiotherapy, SIMATS, Chennai-602105 Tamil Nadu India
2)Dr. Kumaresan A
3)Dr. Deepa S
4)Dr. S.Vignesh
5)Dr. Kumaraguruparan Gopal
6)Dr. Jagatheesan Alagesan
7)Dr. Vandana J Rathod
(72)**Name of Inventor :**
1)Dr. Prathap Suganthirababu
2)Dr. Kumaresan A
3)Dr. Deepa S
4)Dr. S.Vignesh
5)Dr. Kumaraguruparan Gopal
6)Dr. Jagatheesan Alagesan
7)Dr. Vandana J Rathod

(57) Abstract :
Parkinson's disease (PD) is diagnosed in the case of bradykinesia and the presence of supportive characteristics, stiffness, or tremor. The diagnosis is clinical, and exclusion criteria for other diagnoses and thered flag" characteristics must be considered. There is no therapy for PD for cure or disease modification, and progression rates are varied. With better advantages for quality of life in early DP compared with other treatments, Levodopa is the most effective symptomatic therapy. Engine fluctuations and dyskinesia may be improved with the additional therapies later in the illness course. About 10% of patients each year may be suitable for sophisticated treatments, including deep-brain stimulation, with refractory motor fluctuations. The treatment of non-motor symptoms in PD and the necessity of multidisciplinary care are now being shown. The basis for the ideal diagnosis and treatment of PD is outlined in this invention.

No. of Pages : 19 No. of Claims : 4

(12) PATENT APPLICATION PUBLICATION
(19) INDIA
(22) Date of filing of Application :11/07/2021
(21) Application No.202141031070 A
(43) Publication Date : 16/07/2021

(54) Title of the invention : AUTOMATED DIAGNOSIS OF NEUROLOGICAL DISORDER USING ARTIFICIAL INTELLIGENCE

(51) International classification	:A61B0005000000, A61B0005110000, G06N0005000000, G16H0050300000, G06T0007000000
(31) Priority Document No	:NA
(32) Priority Date	:NA
(33) Name of priority country	:NA
(86) International Application No	:NA
Filing Date	:NA
(87) International Publication No	: NA
(61) Patent of Addition to Application Number	:NA
Filing Date	:NA
(62) Divisional to Application Number	:NA
Filing Date	:NA

(71)**Name of Applicant :**
1)Dr. Jagatheesan Alagesan
Address of Applicant :Professor & Principal, Saveetha College of Physiotherapy, SIMATS, Chennai-602105 Tamil Nadu India
2)Dr. Kumaresan A
3)Dr. S.Vignesh
4)Dr. M.Manikumar
5)Dr. Kumaraguruparan Gopal
6)Dr.Prathap Suganthirababu
7)Dr.Lavanya Prathap
(72)**Name of Inventor :**
1)Dr. Jagatheesan Alagesan
2)Dr. Kumaresan A
3)Dr. S.Vignesh
4)Dr. M.Manikumar
5)Dr. Kumaraguruparan Gopal
6)Dr.Prathap Suganthirababu
7)Dr.Lavanya Prathap

(57) Abstract :
An artificial intelligence-based system and methods for diagnosing and monitoring neurological diseases in patients. Several sensors, a collection of trained machine learning-based diagnostic and monitoring tools, and an output device may be included in the system. A variety of sensors could collect information about neurological illnesses. The professional diagnostic tool will learn to provide risk evaluations for various neurological diseases based on sensor data. The trained monitoring tool will follow the progression of an illness over time and may be used to recommend or change the treatment regimen. The system's purpose is to provide an accurate assessment of the presence and severity of neurological problems in a patient without the need for a neurologist's input.

No. of Pages : 22 No. of Claims : 4

(12) PATENT APPLICATION PUBLICATION
(21) Application No.202141031081 A
(19) INDIA
(22) Date of filing of Application :11/07/2021
(43) Publication Date : 16/07/2021

(54) Title of the invention : IOT BASED REAL PHYSICO-CHEMICAL PARAMETERS MONI-TORING SYSTEM IN MANGROVE ZONE

(51) International classification	:H04L0009320000, H04Q0009000000, A61B0005020500, G01D0004000000, H04W0024080000
(31) Priority Document No	:NA
(32) Priority Date	:NA
(33) Name of priority country	:NA
(86) International Application No	:NA
Filing Date	:NA
(87) International Publication No	: NA
(61) Patent of Addition to Application Number	:NA
Filing Date	:NA
(62) Divisional to Application Number	:NA
Filing Date	:NA

(71)**Name of Applicant :**
1)A Selvaraj
Address of Applicant :Assistant Professor, Department of Geoinformatics, Park College of Engineering and Technology, Coimbatore. Tamil Nadu India
2)Dr.A.S.Anakath
3)Dr.S.Saravanan
4)B. Pandeeswari
5)Dr.S.Vidhya Lakshmi
6)Dr.Malini Murrali
7)Srilakshmi Gurunathan
8)Dr.K.Rajakokila
9)Dr.K.Narasimhan
10)Dr.Sachikanta Nanda
11)Dr.R.Kannadasan
(72)**Name of Inventor :**
1)A Selvaraj
2)Dr.A.S.Anakath
3)Dr.S.Saravanan
4)B. Pandeeswari
5)Dr.S.Vidhya Lakshmi
6)Dr.Malini Murrali
7)Srilakshmi Gurunathan
8)Dr.K.Rajakokila
9)Dr.K.Narasimhan
10)Dr.Sachikanta Nanda
11)Dr.R.Kannadasan

(57) Abstract :
ABSTRACT TITLE:IOT BASED REAL PHYSICO-CHEMICAL PARAMETERS MONITORING SYSTEM IN MANGROVE ZONE An IoT based real-time physico-chemical parameters monitoring system in a mangrove zone comprising: a monitoring segment (114) constituted to measure the physical-chemical condition parameters in the mangrove eco-system and level of freshwater measurement in the lagoon and produce the measurement data of said parameters, a transmitting section (112) config-ured to transmit said parameters together to the central server (201). A cen-tral server (201) is configured to store the measured data of said parameters, and the computing unit is configured to display the measured data remotely display unit (202) through remote login. The said real-time system physico-chemical parameters monitoring system in mangrove zone comprising said Insitu unit configured to measure the said parameters across mangrove dis-tribution like Avicennia marina, Rhizophora apiculata, Rhizophora mucrona-ta, and Aegecerias corniculatum zones comprising a central processor (111) and central server unit (201) configured to save and produce the said pa-rameters remotely.

No. of Pages : 23 No. of Claims : 9

(12) PATENT APPLICATION PUBLICATION
(21) Application No.202141031084 A
(19) INDIA
(22) Date of filing of Application :11/07/2021
(43) Publication Date : 16/07/2021

(54) Title of the invention : A VIRTUAL REALITY BASED PERSONALIZED VIRTUAL ROOM FOR IMPROVING QUALITY OF LIFE FOR THE BEDRIDDEN PATIENT

(51) International classification	:G06F0003010000, G02B0027010000, G06T0019000000, A63F0013300000, G06F0003160000
(31) Priority Document No	:NA
(32) Priority Date	:NA
(33) Name of priority country	:NA
(86) International Application No	:NA
Filing Date	:NA
(87) International Publication No	: NA
(61) Patent of Addition to Application Number	:NA
Filing Date	:NA
(62) Divisional to Application Number	:NA
Filing Date	:NA

(71)**Name of Applicant :**
1)G. PRATHAP
Address of Applicant :Assistant Professor, Department of Computer Science, kristu Jayanti College (Autonomous), Narayanapura Cross, kothanur post, Bangalore 560077. Ph:9036967080 E-Mail: prathap.g@kristujayanti.com Karnataka India
2)Dr. S. P. MANIKANDAN
3)Dr. V.R. KAVITHA
4)Dr. R. PUNITHAVATHI
5)Dr. (Er.) AKSHAY BHARDWAJ
6)Dr. M. NIRMALA
7)Dr. M. MAHALAKSHMI
8)Dr. M. PREETHA
9)Dr. R. DELSHI HOWSALAYA DEVI
10)N. NAGARAJAN
(72)**Name of Inventor :**
1)G. PRATHAP
2)Dr. S. P. MANIKANDAN
3)Dr. V.R. KAVITHA
4)Dr. R. PUNITHAVATHI
5)Dr. (Er.) AKSHAY BHARDWAJ
6)Dr. M. NIRMALA
7)Dr. M. MAHALAKSHMI
8)Dr. M. PREETHA
9)Dr. R. DELSHI HOWSALAYA DEVI
10)N. NAGARAJAN

(57) Abstract :
ABSTRACT OF THE INVENTION Bedriddenness is a form of immobility characterized by the inability to move or even sit up. It's not the same as bed-rest, which is a type of non-invasive treatment that's typically used to help people heal or restrict their activities. Caregivers must be mindful of the threats to the patient's emotional and physical health. It can be difficult for family members to meet all of the special needs of bedridden patients. By using a virtual reality room, this invention keeps bedridden patients healthier, more mobile, and mentally engaged. This reveals a Virtual Room (VR) for enhancing the bedridden patient's quality of life. A virtual reality room is a self-contained environment with embedded or portable technologies that enable it to provide or enhance a multimedia virtual reality experience. The first choice for enabling a virtual world was virtual reality rooms. The use of virtual room environments will help bedridden patients enhance their quality of life. Taking a stroll has long been known to boost one's mood, and it can also encourage those suffering from physical ailments to feel more optimistic. They were able to see the scenery of Bradgate Park and relive happy memories with family and friends by using augmented reality glasses. This Virtual Room presents a convincing opportunity for inpatient anxiety to be addressed. Patients are transported • away from the four walls of their room into novel, positive, and emotionally enriching worlds using virtual reality (VR) devices, which offer interactive, authentic, three-dimensional experiences. This invention enables patients to escape • to fun places and realities in order to increase their quality of life. Almost every time a bedridden patient smiles, laughs, or says something like that's amazing! • It is at this point that the user realizes that VR is unique and different, and that by using this Virtual Space, they can quickly recover from any disease.

No. of Pages : 11 No. of Claims : 0

(12) PATENT APPLICATION PUBLICATION
(21) Application No.202141031085 A
(19) INDIA
(22) Date of filing of Application :11/07/2021
(43) Publication Date : 16/07/2021

(54) Title of the invention : SYSTEM FOR USER INTERFACE DESIGN USING ARTIFICIAL INTELLIGENCE AND METHODS THEREOF

(51) International classification	:G06Q0010060000, G06F0008380000, G06F0008100000, G06F0008200000, B01D0029330000
(31) Priority Document No	:NA
(32) Priority Date	:NA
(33) Name of priority country	:NA
(86) International Application No	:PCT//
Filing Date	:01/01/1900
(87) International Publication No	: NA
(61) Patent of Addition to Application Number	:NA
Filing Date	:NA
(62) Divisional to Application Number	:NA
Filing Date	:NA

(71)**Name of Applicant :**
1)Dr. Raghavi K Bhujang
Address of Applicant :Head of the Department of Computer Application and Information Science ISBR Business School, BENGALURU Karnataka India
2)Dr. Kavitha
3)Mr. Shashank Shekhar Singh
4)Jagadish S. Jakati
5)Dr. Suresh M B
6)Mrs. Usha M
7)Mrs.Chetana Srinivas
8)Dr.Nandini Prasad K S
9)Dr. Gufran Ahmad Ansari
(72)**Name of Inventor :**
1)Dr. Raghavi K Bhujang
2)Dr. Kavitha
3)Mr. Shashank Shekhar Singh
4)Jagadish S. Jakati
5)Dr. Suresh M B
6)Mrs. Usha M
7)Mrs.Chetana Srinivas
8)Dr.Nandini Prasad K S
9)Dr. Gufran Ahmad Ansari

(57) Abstract :
TITLE OF INVENTION: SYSTEM FOR USER INTERFACE DESIGN USING ARTIFICIAL INTELLIGENCE AND METHODS THEREOF FIELD OF INVENTION: COMPUTER SCIENCE ABSTRACT The Invention discloses a Novel approach for dynamic user interfaces design upon requirements collected from client side with help of reinforcement learning. The Invention understands the business requirements with the help of a GUI and suggests a UI design. The Invention addresses the issues of negligence at Requirements collection phases and ensures accuracy and reliability in Requirements Engineering process. Embodiment of the Invention is to ensure optimization of available resources and better project planning.

No. of Pages : 10 No. of Claims : 1

(12) PATENT APPLICATION PUBLICATION
(19) INDIA
(22) Date of filing of Application :11/07/2021
(21) Application No.202141031086 A
(43) Publication Date : 16/07/2021

(54) Title of the invention : FABRIC DEFECT DETECTION USING DEEP CONVOLUTIONAL NEURAL NETWORK AND MONITORING WITH INDUSTRIAL INTERNET OF THINGS

(51) International classification	:G06K0009620000, G06T0007000000, G06N0003040000, G06N0003080000, G06K0009460000
(31) Priority Document No	:NA
(32) Priority Date	:NA
(33) Name of priority country	:NA
(86) International Application No	:PCT//
Filing Date	:01/01/1900
(87) International Publication No	: NA
(61) Patent of Addition to Application Number	:NA
Filing Date	:NA
(62) Divisional to Application Number	:NA
Filing Date	:NA

(71)**Name of Applicant :**
1)Dr. D. PRABHA
Address of Applicant :PROFESSOR, DEPARTMENT OF COMPUTER SCIENCE AND ENGINEERING, SRI KRISHNA COLLEGE OF ENGINEERING AND TECHNOLOGY, SUGUNAPURAM, COIMBATORE Tamil Nadu India
2)Dr. A. PUSHPALATHA
3)Ms. K. DEVIPRIYA
4)Dr. T. LATHA MAHESWARI
5)Dr. K. RAMA ABIRAMI
6)Ms. SOPHIA. B
7)Dr. V. VIJEYA KAVERI
8)Ms. S. MOHANA GOWRI
9)Ms. P. ANITHA
10)Ms. SRUTHI ANAND
(72)**Name of Inventor :**
1)Dr. D. PRABHA
2)Dr. A. PUSHPALATHA
3)Ms. K. DEVIPRIYA
4)Dr. T. LATHA MAHESWARI
5)Dr. K. RAMA ABIRAMI
6)Ms. SOPHIA. B
7)Dr. V. VIJEYA KAVERI
8)Ms. S. MOHANA GOWRI
9)Ms. P. ANITHA
10)Ms. SRUTHI ANAND

(57) Abstract :
The texture of the fabric is an important factor in the design and production of high-quality fabric. Traditionally, the manual visual inspection on fabric faces a lot of challenges. The approaches based on early machine learning algorithms directly depend on handcrafted features, which are time-consuming and error-prone processes. Therefore, an automated system is needed for the classification of fabric to improve productivity. In this invention a deep learning model based on data augmentation and transfer learning approach for the classification and recognition of fabrics was introduced. Deep Convolution Neural Network (CNN) has an impressive development in target detection, and better results have been obtained with the implementation of deep CNN design for texture detection. The first step is image acquisition and pre processing of fabric images and the data augmentation techniques are applied to increase the size of dataset. The sample images were processed in CNN based machine learning. Here the network has an input layer, n number of hidden layer and output layer. The neural network is trained and tested with these samples and the result obtained is used to calculate the efficiency of defect identification. The CNN will effectively classify the defective and non defective fabric and it will be saved in the cloud database. It uses Industrial Internet of Things to monitor all the data through PC or Mobile from the remote office. The productivity and quality of the apparels will be increased to a greater extent if this kind of automatic defect detection and identification system is applied in inspection systems of apparel industry. Automated defect detection is commonly used in sectors like textile, automotive, industrial imaging, manufacturing and many others.

No. of Pages : 10 No. of Claims : 3

(12) PATENT APPLICATION PUBLICATION
(21) Application No.202141031088 A
(19) INDIA
(22) Date of filing of Application :11/07/2021
(43) Publication Date : 16/07/2021

(54) Title of the invention : SMART INDOOR PLANT ENVIRONMENT CONTROL SYSTEM

(51) International classification	:A01G0009240000, A01G0007000000, A01G0007040000, A01G0022000000, F24F0011300000
(31) Priority Document No	:NA
(32) Priority Date	:NA
(33) Name of priority country	:NA
(86) International Application No	:PCT//
Filing Date	:01/01/1900
(87) International Publication No	: NA
(61) Patent of Addition to Application Number	:NA
Filing Date	:NA
(62) Divisional to Application Number	:NA
Filing Date	:NA

(71)**Name of Applicant :**
1)Dr. A. BALAMURUGAN
Address of Applicant :Assistant Professor, Department of Physics, Government Arts and Science College, Avinashi 641654, Tirupur (Dt) Tamilnadu. Ph: 9865372315 E-Mail: bala.snr@gmail.com Tamil Nadu India
2)Dr. S. KANNAN
3)K. C. SURESH
4)R. CHITHRA DEVI
5)Dr. Y.A. SYED KHADAR
(72)**Name of Inventor :**
1)Dr. A. BALAMURUGAN
2)Dr. S. KANNAN
3)K. C. SURESH
4)R. CHITHRA DEVI
5)Dr. Y.A. SYED KHADAR

(57) Abstract :
ABSTRACT OF THE INVENTION Indoor and green house plant cultivation had been one among the practices in cultivating the plants either in small-scale or large-scale. In recent days it™s been an emerging one too. Despite, its major shortcomings, people have turned up to shown interest in cultivating flowering plants and crops in small closed spaces. The major drawback of indoor cultivation would very often be the climatic control, under which the efficacy of the production will vary. For that reason, this smart system with a controller (EFR32BG22 SoC) and a control pane (Web app) which will have an effective switch over the environmental conditions would pay a significant role for the growth of plants. Primarily, the system is imparted with sensors to mind the various parametric conditions such as air humidity, air temperature and light intensity. Using these measured values, the controller will manipulate according to the programmed actions until it gets the tolerable values from sensors as feedback. Case in point, the sensed input from the temperature sensor will be checked with the desired range that is preferred for the favorable climatic condition of the plant; if the temperature sensed is abnormal or unfavorable then, enabling the appropriate fan, cooling conditions and reducing the light intensity will be the action in turn to bring the case upright. Similarly, the input sensed from the light sensor would be checked with the anticipated range of favorable condition respective to the plant that™s cultivated; if the values are undesirable then, appropriate lighting conditions with reflectors should be enabled by reducing the cooling and ventilating settings. Therefore, to provide an expert insight and switch, this smart control system will enhance the care and productivity of the indoor plants by maintaining the necessary environmental climatic conditions.

No. of Pages : 12 No. of Claims : 8

(12) PATENT APPLICATION PUBLICATION
(21) Application No.202141031095 A
(19) INDIA
(22) Date of filing of Application :12/07/2021
(43) Publication Date : 16/07/2021

(54) Title of the invention : REALTIME ANTI-SPOOFING SYSTEM FOR FACE DETECTION INCLUDING COVID PROTOCOLS USING CNN AND SENSORS

(51) International classification	:G06Q0050220000, G16H0050800000, F24F0005000000, G02C0007020000, G01D0021020000	(71)**Name of Applicant :** **1)Thirumagal E** Address of Applicant :School of Computer Science and Engineering, REVA UNIVERSITY, Rukmini Knowledge Park, Kattigenahalli, Yelahanka, Bengaluru Karnataka India
(31) Priority Document No	:NA	(72)**Name of Inventor :**
(32) Priority Date	:NA	**1)Thirumagal E**
(33) Name of priority country	:NA	**2)Amoolya M**
(86) International Application No	:NA	**3)Amrutha B P**
Filing Date	:NA	**4)Ambika Y N**
(87) International Publication No	: NA	**5)Alok R Patil**
(61) Patent of Addition to Application Number	:NA	
Filing Date	:NA	
(62) Divisional to Application Number	:NA	
Filing Date	:NA	

(57) Abstract :
As COVID-19 spread the whole way across the world, a significant number of us got mindful of how significant face covers are. Medical services authorities and nearby foundations from one side of the planet to the other are encouraging individuals to wear masks ,as it is the best way to forestall the transmission of the infection. Masks have without a doubt frustrated the facial-acknowledgment industry; the innovation has likewise adjusted. It might sound odd yet wearing a cover does not really prevent a PC from recognizing somebody. In this situation maintaining social distancing is very necessary. So in order to check whether social distancing is maintained or not we are making use of ultrasonic sensor. We are using DHT11 sensor to measure humidity and temperature of a person instantaneously.

No. of Pages : 5 No. of Claims : 2

(12) PATENT APPLICATION PUBLICATION
(21) Application No.202141031136 A
(19) INDIA
(22) Date of filing of Application :12/07/2021
(43) Publication Date : 16/07/2021

(54) Title of the invention : WIDEBAND CIRCULAR POLARIZED MEANDERED PATCH ANTENNA FOR MICROWAVE IMAGING SYSTEM

(51) International classification	:H01Q0009040000, H01Q0001120000, A61B0005050000, H01Q0001380000, G01S0013890000
(31) Priority Document No	:NA
(32) Priority Date	:NA
(33) Name of priority country	:NA
(86) International Application No	:NA
Filing Date	:NA
(87) International Publication No	: NA
(61) Patent of Addition to Application Number	:NA
Filing Date	:NA
(62) Divisional to Application Number	:NA
Filing Date	:NA

(71)**Name of Applicant :**
1)Mr.Sekhar Manepalli
Address of Applicant :Assistant Professor, Department of ECE, Vignan's Foundation for Science, Technology & Research (Deemed to be University), Vadlamudi, Andhra Pradesh, India. Pin Code:522213 Andhra Pradesh India
2)Dr.Suman Nelaturi
3)Prof. N V S N Sarma
(72)**Name of Inventor :**
1)Mr.Sekhar Manepalli
2)Dr.Suman Nelaturi
3)Prof. N V S N Sarma

(57) Abstract :
A Metallic Device that can radiate and receiving Radio waves is an Antenna. The Microwave Imaging (MI) system comprising of Physical Object (101); Imaging Platform (103) rotating the Physical Object (102); Antenna Mount (105) to which Meandered Patch Antenna (104) is attached; Vector Network Analyzer (106); and Image Processing and Control Unit; uses a wideband circular polarized meandered antenna for Microwave Imaging. The main embodiment of the present invention is design of wideband circular polarized meandered patch antenna for Microwave Imaging. Initially, a meandered rectangular patch with I stub is used to achieve a Single band antenna, further I stub is extended as a T stub to attain a dual-band antenna. To realize the wideband property, a rectangular stub is loaded to the ground in parallel to the T shaped stub loaded to the patch; furthermore the rectangular patch is meandered with slots and truncations. The patch is fed with a coplanar waveguide (CPW) feed and the entire model is placed in a hybrid pentagonal slot made in the antenna ground to make it a space-saving antenna. The present invention disclosed herein measures good wideband performance of 50.4% (2.56GHz 4.3GHz) with voltage standing wave ratio < 2, and a peak gain of 5.7dB with a stable radiation pattern in a compact area of 35mm2. The property of circular polarization with a bandwidth of 45.6% (2.64GHz 4.2GHz) can mitigate the polarization mismatch problem and enables polarization coding used in MI systems.

No. of Pages : 20 No. of Claims : 10

(12) PATENT APPLICATION PUBLICATION
(21) Application No.202141031206 A
(19) INDIA
(22) Date of filing of Application :12/07/2021
(43) Publication Date : 16/07/2021

(54) Title of the invention : SYSTEM AND METHOD OF BIOGAS PRODUCTION- A HOUSEHOLD BIOGAS DIGESTERS

(51) International classification	:C12M0001107000, C12M0001000000, C02F0003280000, C12P0005020000, C02F0011040000
(31) Priority Document No	:NA
(32) Priority Date	:NA
(33) Name of priority country	:NA
(86) International Application No	:NA
Filing Date	:NA
(87) International Publication No	: NA
(61) Patent of Addition to Application Number	:NA
Filing Date	:NA
(62) Divisional to Application Number	:NA
Filing Date	:NA

(71)**Name of Applicant :**
1)Dr.M.SARAVANAN
Address of Applicant :ASSOCIATE PROFESSOR, DEPARTMENT OF MECHANICAL ENGINEERING ANNAMALAI UNIVERSITY, ANNAMALAI NAGAR, CHIDAMBARAM, TAMIL NADU 608002. Tamil Nadu India
2)Dr.R.SURESH
3)Mr. R. SENTHIL KUMAR
4)Dr. NAVNEET JOSHI
5)Dr. ISHAN Y. PANDYA
6)Mr. S. KRISHNARAJ
7)Mr. P. ANBARASU
8)Mr. S. SIVA CHANDRAN
9)Dr. CHIKKAPPA UDAGANI
(72)**Name of Inventor :**
1)Dr.M.SARAVANAN
2)Dr.R.SURESH
3)Mr. R. SENTHIL KUMAR
4)Dr. NAVNEET JOSHI
5)Dr. ISHAN Y. PANDYA
6)Mr. S. KRISHNARAJ
7)Mr. P. ANBARASU
8)Mr. S. SIVA CHANDRAN
9)Dr. CHIKKAPPA UDAGANI

(57) Abstract :
ABSTRACT SYSTEM AND METHOD OF BIOGAS PRODUCTION- A HOUSEHOLD BIOGAS DIGESTERS This development is to evaluate the practicality of limited scope biogas creation utilizing natural waste, investigate choices for its application and propose a plan of action on how feedstock sourcing, office activity and finished result use could be acknowledged in the exploration region. Biogas creation has contributed incredibly as an elective wellspring of fuel power supply in agricultural country diminishing the fixation on oil based good. Each house is producing 2 to 5 kg of strong waste regular and they create sufficient methane ,which can secure the environmental change. Versatile biogas plant can be introduced in every one of the houses and they can drop the day by day producing food squander into the biogas digester . The digester is planned in a such a manner that biomethenization cycle will occur and food waste will be changed over to methane and fluid excrement. The creation and usage of biogas assumes a critical part in arranging and changing over civil and agrarian waste into fuel that can be use at home for cooking and lighting.

No. of Pages : 21 No. of Claims : 5

(12) PATENT APPLICATION PUBLICATION
(21) Application No.202141031207 A
(19) INDIA
(22) Date of filing of Application :12/07/2021
(43) Publication Date : 16/07/2021

(54) Title of the invention : IOT ENABLED CONVENIENT DIGITAL SPECTROPHOTOMETER TO INVESTIGATE ENGINE OIL AND IMPURITIES LEVEL IN REAL TIME PRACTICE.

(51) International classification	:H04L0029080000, A61B0005000000, H04W0004700000, H04W0048100000, F02B0075020000	(71)**Name of Applicant :** **1)Dr.I.Daniel Lawrence** Address of Applicant :Assistant Professor, Loyola Institute of Technology, Chennai. Tamil Nadu India **2)Dr.M.Balasubramanian**
(31) Priority Document No	:NA	**3)Dr.R.Arunprasath**
(32) Priority Date	:NA	**4)Dr.C.Ramesh Kannan**
(33) Name of priority country	:NA	**5)Mr.B.Aravinth**
(86) International Application No	:NA	**6)Dr B Kishore**
Filing Date	:NA	(72)**Name of Inventor :**
(87) International Publication No	: NA	**1)Dr.I.Daniel Lawrence**
(61) Patent of Addition to Application Number	:NA	**2)Dr.M.Balasubramanian**
Filing Date	:NA	**3)Dr.R.Arunprasath**
(62) Divisional to Application Number	:NA	**4)Dr.C.Ramesh Kannan**
Filing Date	:NA	**5)Mr.B.Aravinth**
		6)Dr B Kishore

(57) Abstract :
IoT enabled convenient digital spectrophotometer to investigate engine oil and impurities level in real time practice In recent days, Internet of Things (IoT) has been explored for smart disseminate approach and organize for dynamic impact in future research direction. On the other side, more than 450 research survey rarely focuses the necessity of exploration and construction through deployment of IoT devices in an engine oil analysis respectively. Among these, an advanced system to investigate engine oil and impurities level in real time seems to be significant. The system comprises IoT positioned monitoring instrument for oil impurities and its characteristics at distinct level. In connection to this, the instrument includes spectrophotometer, Rasperry-pi, dipstick with end detectors and light-dependent sensor. The advanced instrument were attempts to quantitative and qualitative analysis of four stroke IC engine. Ultimately, the proposed system facilitates highly affordable and portable.

No. of Pages : 9 No. of Claims : 4

(12) PATENT APPLICATION PUBLICATION
(19) INDIA
(22) Date of filing of Application :12/07/2021

(21) Application No.202141031252 A
(43) Publication Date : 16/07/2021

(54) Title of the invention : ALCOHOL DETECTION WITH MESSAGING SYSTEM AND VEHICLE CONTROL

(51) International classification	:B60K0028060000, G01N0033497000, B60R0025250000, B60R0025000000, B60R0025102000
(31) Priority Document No	:NA
(32) Priority Date	:NA
(33) Name of priority country	:NA
(86) International Application No	:NA
Filing Date	:NA
(87) International Publication No	: NA
(61) Patent of Addition to Application Number	:NA
Filing Date	:NA
(62) Divisional to Application Number	:NA
Filing Date	:NA

(71)**Name of Applicant :**
1)Dr.N.Ramchandra, Professor/ EEE/ St. Martin™s Engineering College
Address of Applicant :ST.MARTIN™S ENGINEERING COLLEGE Dhulapally, Kompally Secenderabad Telangana India 500100 Telangana India
2)Dr. P. Santosh Kumar Patra Principal & Professor / CSE/ St. Martin™s Engineering College
3)Dr. D. V. Sreekanth Professor/Mech/ St. Martin™s Engineering College
4)Mrs. V. Suma Deepthi Assistant Professor/EEE/Malla Reddy Engineering College
5)Ms. T. V. Sai Kalyani, Assistant Professor/ EEE/ St. Martin™s Engineering College
6)Mrs. S. Trilochana Assistant Professor/EEE/ St. Martin™s Engineering College
7)Mrs. G. Esha Assistant Professor/EEE/ St. Martin™s Engineering College
8)Ms.CH.Nirosha/ Assistant Professor/EEE/ St. Martin™s Engineering College
9)Mr. V. Vishnu Vardhan Reddy Assistant Professor/EEE/ St. Martin™s Engineering College
(72)**Name of Inventor :**
1)Dr.N.Ramchandra, Professor/ EEE/ St. Martin™s Engineering College
2)Dr. P. Santosh Kumar Patra Principal & Professor / CSE/ St. Martin™s Engineering College
3)Dr. D. V. Sreekanth Professor/Mech/ St. Martin™s Engineering College
4)Mrs. V. Suma Deepthi Assistant Professor/EEE/Malla Reddy Engineering College
5)Ms. T. V. Sai Kalyani, Assistant Professor/ EEE/ St. Martin™s Engineering College
6)Mrs. S. Trilochana Assistant Professor/EEE/ St. Martin™s Engineering College
7)Mrs. G. Esha Assistant Professor/EEE/ St. Martin™s Engineering College
8)Ms.CH.Nirosha/ Assistant Professor/EEE/ St. Martin™s Engineering College
9)Mr. V. Vishnu Vardhan Reddy Assistant Professor/EEE/ St. Martin™s Engineering College

(57) Abstract :
The motive of this project is that the alcohol is detected by the alcohol sensor MQ3 which is the senses in the car while in case the driver drinks alcohol, and the sensor sends a signal to Arduino Uno which forward a particular signal to the GSM. The GSM sends a message to a particular preregister mobile that the driver is drunken and the buzzer beeping and led is indicated red and then the engine will be locked. If any other person wants to drive the system will be unlocked after certain or given time but alcohol sensor continues working. In this way owner get the real location by receiving the exact position of the car. It will be copied to the google map and the location of that car and easily be accessed.

No. of Pages : 13 No. of Claims : 6

(12) PATENT APPLICATION PUBLICATION
(19) INDIA
(22) Date of filing of Application :12/07/2021

(21) Application No.202141031258 A
(43) Publication Date : 16/07/2021

(54) Title of the invention : DEPTH AND ACCELEROMETER SENSOR BASED MAGNETIC EXTENSOMETER FOR THE MEASUREMENT OF SUBSOIL SETTLEMENT

(51) International classification	:G01B0005300000, G06K0009620000, E02D0001020000, G01N0033240000, E02B0011000000
(31) Priority Document No	:NA
(32) Priority Date	:NA
(33) Name of priority country	:NA
(86) International Application No	:NA
Filing Date	:NA
(87) International Publication No	: NA
(61) Patent of Addition to Application Number	:NA
Filing Date	:NA
(62) Divisional to Application Number	:NA
Filing Date	:NA

(71)**Name of Applicant :**
1)Dr. S. Kamalakannan
Address of Applicant :Associate Professor & Head Department of Civil Engineering, IES College of Engineering, Thrissur, Kerala 680551 Kerala India
2)Ms.Anjali Baby
3)Ms.Steffy Maria Simon
4)Ms.Anju E M
5)Ms. Glynez Joseph
6)Ms.Oshin Ann Mathews
7)Ms.Lidiya Jose
8)Mr.Seemon
9)Ms.Gayathri M
10)Ms.Jitha M R
11)Ms.Angela C Joy
12)Ms.Vyshna Sushil T M
13)Ms. Cyldin P A
(72)**Name of Inventor :**
1)Dr. S. Kamalakannan
2)Ms.Anjali Baby
3)Ms.Steffy Maria Simon
4)Ms.Anju E M
5)Ms. Glynez Joseph
6)Ms.Oshin Ann Mathews
7)Ms.Lidiya Jose
8)Mr.Seemon
9)Ms.Gayathri M
10)Ms.Jitha M R
11)Ms.Angela C Joy
12)Ms.Vyshna Sushil T M
13)Ms. Cyldin P A

(57) Abstract :
Surveillance of subsurface settlements in construction and tunnelling of deep excavations will give an early indicator of possible ground settlement or sinkhole development. Rock and magnetic extensometers may now be used to monitor the territory of the sub-surface, which is utilized most frequently. In this proposed invention, the sensor-based magnet extensometers for soil settling suggested.

No. of Pages : 22 No. of Claims : 5

(12) PATENT APPLICATION PUBLICATION
(21) Application No.202141031266 A
(19) INDIA
(22) Date of filing of Application :12/07/2021
(43) Publication Date : 16/07/2021

(54) Title of the invention : SMART GLOVE FOR HEARING IMPAIRED

(51) International classification	:G09B0021000000, G06F0003010000, H04M0011060000, A41D0019000000, G09B0021040000
(31) Priority Document No	:NA
(32) Priority Date	:NA
(33) Name of priority country	:NA
(86) International Application No	:NA
Filing Date	:NA
(87) International Publication No	: NA
(61) Patent of Addition to Application Number	:NA
Filing Date	:NA
(62) Divisional to Application Number	:NA
Filing Date	:NA

(71)**Name of Applicant :**
1)Dr. Sanjeev S Sannakki
Address of Applicant :Designation: Professor Department: Computer science and engineering Institution address: KLS Gogte institute of technology Belagavi Karnataka India
2)Dr. Vijay S Rajpurohit
3)Mahesh G Huddar
4)Gururaj Kulkarni
5)Mrs. Sankirti Sandeep Shiravale
6)Abhilasha S Jayakkanavar
7)Dr.Piyush Kumar Pareek
(72)**Name of Inventor :**
1)Dr. Sanjeev S Sannakki
2)Dr. Vijay S Rajpurohit
3)Mahesh G Huddar
4)Gururaj Kulkarni
5)Mrs. Sankirti Sandeep Shiravale
6)Abhilasha S Jayakkanavar
7)Dr.Piyush Kumar Pareek

(57) Abstract :
Gesture recognition approach has a broad scope of utilizations and employments. This method can be utilized to control gadgets only via motions with no manual connection with the particular machine. Using sign identification, an individual can pin out at the computer or at a versatile screen and utilize linguistic communication to pick and utilize totally distinctive implementations within the device. This linguistic communication employed by deaf and mute folks will be understood by the normal person this method and reborn to content so sanctioning and helping higher conversation among the deaf - mute and other individuals cooperating with them. Signal verbalization is one of the useful ways to ease the communication between the deaf and mute and normal society. Though signing may be enforced to speak, the target person should have a thought of the signing that isn't attainable forever. Thus, it reduces such barriers. This Invention was meant to be a typical example to visualize the feasibleness of recognizing sign languages. With this, deaf or mute communities will use the gloves to make gestures in keeping with signing and also the gestures are going to be converted to speech. The system may be a bridge between traditional and dumb\deaf folks; it fills the gaps of communication between dumb\deaf folks and traditional people. The gloves area unit freelance and it's moveable with minimum weight and low power. The system converts the hand gestures to the text and more to speech. If in some conditions the person can™t hear the sound produced there is a provision provided into the system of text due to which the person can read and understand what another person wants to convey.

No. of Pages : 14 No. of Claims : 1

(12) PATENT APPLICATION PUBLICATION
(21) Application No.202141031282 A
(19) INDIA
(22) Date of filing of Application :12/07/2021
(43) Publication Date : 16/07/2021

(54) Title of the invention : A SYSTEM AND METHOD FOR SENSING TOPOLOGY OF A PLANET

(51) International classification	:G06F0003041000, G06F0003010000, A61B0017290000, H04W0004700000, G08G0001010000	(71)**Name of Applicant :** **1)Galaxeye Space Solutions Private Limited** Address of Applicant :Aadhinath Appartments, Flat No. 401, 4th Floor, 66 jermiah Road, Vepery, Chennai, Tamil nadu Tamil Nadu India
(31) Priority Document No	:NA	(72)**Name of Inventor :**
(32) Priority Date	:NA	**1)Kishan Thakkar**
(33) Name of priority country	:NA	**2)Rakshit Bhatt**
(86) International Application No	:NA	**3)Denil Chawda**
Filing Date	:NA	**4)Suyash Singh**
(87) International Publication No	: NA	**5)Pranit Mehta**
(61) Patent of Addition to Application Number	:NA	
Filing Date	:NA	
(62) Divisional to Application Number	:NA	
Filing Date	:NA	

(57) Abstract :
A sensor system for sensing topography of a planet is disclosed herein. The system comprises at least one on-board processor. The system further comprises at least one first and second configured on a vehicle moving at a height from a crust portion of the planet for sensing the topography of a sample area of the planet. The sensors are communicatively coupled to the on-board processor. The system comprises a memory communicatively coupled to the on-board processor, wherein the memory stores executable instructions that, when executed by the processor, cause the processor to facilitate synchronized and aligned orientation of the sensors in a direction towards the sample area for sensing spatially and temporally matched datasets. The processor then receives and processes the spatially and temporally matched datasets to achieve pixel level co-registration thereof.

No. of Pages : 24 No. of Claims : 10

(12) PATENT APPLICATION PUBLICATION
(21) Application No.202141031284 A
(19) INDIA
(22) Date of filing of Application :12/07/2021
(43) Publication Date : 16/07/2021

(54) Title of the invention : LOCATION PRIVACY USING MALO K-ANONYMITY

(51) International classification	:G06F0021620000, H04L0029060000, H04W0004029000, H04W0012020000, H04L0009080000
(31) Priority Document No	:NA
(32) Priority Date	:NA
(33) Name of priority country	:NA
(86) International Application No	:NA
Filing Date	:NA
(87) International Publication No	: NA
(61) Patent of Addition to Application Number	:NA
Filing Date	:NA
(62) Divisional to Application Number	:NA
Filing Date	:NA

(71)**Name of Applicant :**
1)Lakshmi Prasanna Yeluri
Address of Applicant :Designation: Research Scholar Department: CSE Institution address: Jawaharlal Nehru Technological University,Hyderabad Telangana India
2)Dr.E Madhusudhana Reddy
3)Dr.Piyush Kumar Pareek
(72)**Name of Inventor :**
1)Lakshmi Prasanna Yeluri
2)Dr.E Madhusudhana Reddy
3)Dr.Piyush Kumar Pareek

(57) Abstract :
ABSTRACT Location based services, providing privacy to the users is a major concern to be addressed where a lot of research is being carried out. A message from a user to a database is called location anonymous if the user™s identity is not able to be 245 distinguished from other users based on the location information. Privacy to the user location can be achieved by using one of the most popular anonymization techniques known as K-anonymity. This Invention suggests a system using Score-Based Location K-Anonymity for better privacy.

No. of Pages : 15 No. of Claims : 1

(12) PATENT APPLICATION PUBLICATION
(21) Application No.202141031298 A
(19) INDIA
(22) Date of filing of Application :12/07/2021
(43) Publication Date : 16/07/2021

(54) Title of the invention : HEALTH MONITORING SYSTEM •

(51) International classification	:H04L0029080000, H04L0012260000, A61B0005024000, G01D0021020000, H04W0004700000
(31) Priority Document No	:NA
(32) Priority Date	:NA
(33) Name of priority country	:NA
(86) International Application No	:NA
Filing Date	:NA
(87) International Publication No	: NA
(61) Patent of Addition to Application Number	:NA
Filing Date	:NA
(62) Divisional to Application Number	:NA
Filing Date	:NA

(71)**Name of Applicant :**
1)NIRMALKUMAR S BENNI
Address of Applicant :School of ECE, REVA University, Bengaluru -560064 Karnataka India
2)M.DIVYA KEERTHI
3)SRILAKSHMI K S
4)VISHALAXI P HANDI
(72)**Name of Inventor :**
1)NIRMALKUMAR S BENNI
2)M.DIVYA KEERTHI
3)SRILAKSHMI K S
4)VISHALAXI P HANDI

(57) Abstract :
With tons of new healthcare technology start-ups, IoT is rapidly revolutionizing the healthcare industry. In this project, we have designed the IoT Based Patient Health Monitoring System using ESP8266 & Arduino. The IoT platform used in this project is Thing Speak. Thing Speak is an open-source Internet of Things (IoT) application and API to store and retrieve data from things using the HTTP protocol over the Internet or via a Local Area Network. This IoT device could read the pulse rate and measure the surrounding temperature. It continuously monitors the pulse rate and surrounding temperature and updates them to an IoT platform.

No. of Pages : 7 No. of Claims : 4

(12) PATENT APPLICATION PUBLICATION
(21) Application No.202141031300 A
(19) INDIA
(22) Date of filing of Application :12/07/2021
(43) Publication Date : 16/07/2021

(54) Title of the invention : THIRD EYE FOR THE BLIND

(51) International classification	:G09B0021000000, A01K0013000000, A01K0027000000, A23K0040200000, A61H0003060000
(31) Priority Document No	:NA
(32) Priority Date	:NA
(33) Name of priority country	:NA
(86) International Application No	:NA
Filing Date	:NA
(87) International Publication No	: NA
(61) Patent of Addition to Application Number	:NA
Filing Date	:NA
(62) Divisional to Application Number	:NA
Filing Date	:NA

(71)**Name of Applicant :**
1)ARUN KUMAR T G.
Address of Applicant :#6/863, Behind 108 shivalinga gudi kotturu (tq) Bellary (d) Pin code -583134 Karnataka India
2)ABHISHEK D
3)ABHISHEK S.
4)ADISH H S.
5)NIRMALKUMAR S. BENNI
(72)**Name of Inventor :**
1)ARUN KUMAR T G.
2)ABHISHEK D
3)ABHISHEK S.
4)ADISH H S.
5)NIRMALKUMAR S. BENNI

(57) Abstract :
According to WHO 39 million peoples are estimated as blinds worldwide. They are suffering a lot of harder ship in their daily life. The affected ones have been using the traditional white cane for many years which although being effective, still has a lot of disadvantages. Another way is, having a pet animal such as a dog, but it is really expensive. So the aim of the project is to develop a cheap and more efficient way to help visually impaired to navigate with greater comfort, speed and confidence.

No. of Pages : 9 No. of Claims : 3

(12) PATENT APPLICATION PUBLICATION
(21) Application No.202141031309 A
(19) INDIA
(22) Date of filing of Application :13/07/2021
(43) Publication Date : 16/07/2021

(54) Title of the invention : MODERN DEVICE AND METHOD FOR AN EXTENDED DEPTH OF FIELD CAMERA

(51) International classification	:G06T0005000000, G02B0027000000, H04N0001409000, G06T0005100000, G06K0009000000	(71)**Name of Applicant :** **1)Dr. A. Chrispin Jiji** Address of Applicant :Associate Professor Department of ECE The Oxford College of Engineering Banglaore Karnataka India
(31) Priority Document No	:NA	(72)**Name of Inventor :** **1)Dr. A. Chrispin Jiji**
(32) Priority Date	:NA	
(33) Name of priority country	:NA	
(86) International Application No	:NA	
Filing Date	:NA	
(87) International Publication No	: NA	
(61) Patent of Addition to Application Number	:NA	
Filing Date	:NA	
(62) Divisional to Application Number	:NA	
Filing Date	:NA	

(57) Abstract :
Depth of field is an important factor of imaging systems that highly affects the quality of the acquired image. Extended depth of field (EDoF) imaging is a challenging ill-posed problem and has been extensively addressed in the literature. The propossed computational imaging approach for EDoF, employ CodeV via optical depth of elements and we achieve Turbidity removal image through non-local regularization, and later achieve Enhancement through Dark channel prior directional Gradient, and Weighted Grey Edge methods. Conventional approaches put the main emphasize on the optics, in this work, we solve the computational EDoF imaging problem via an optimization framework, where we model the optics (camera) and the post-processing (turbidity removal & enhancement) algorithm as an optimization framework. In particular, our computational EDoF camera employs the hybrid combination of a refractive lens and a DOE at the aperture position, where the DOE serves for the CodeV, a Non-local regularization as the turbidity removal algorithm. First, the refractive lens, which serves as the main lens, significantly relaxes the sampling requirements of the DOE compared to DOE-only optics, which consequently contributes to the fast convergence of the algorithms. Second, the opposite color dispersion characteristics of the refractive lens and DOE enables achieving underwater imaging with minimal time to analyse the UWPSF. The optimized UWPSF is combined with an optimization-based turbidity removal algorithm by minimizing turbidity. NLR method is used to remove turbidity which process convergence in fewer iterations and this is much faster in computational speed by reaching most convergence in fewer iterations. Later the enhancement technique is then merged with optimized UWPSF turbidity removal algorithm to improve image visibility and color. Initially, a Dark Channel Prior Directional Gradient (DCPDG) to improve visibility and sharp boundaries by reducing artefacts observed around edges. Later, used Weighted Grey Edge (WGE) to improve color. The above-mentioned factors together result in superior EDoF performance with respect to the state-of-the-art. Finally, to confirm Hardware implementation on Dark Channel Prior Directional Filter, this implemented method verified with similar scenes and shown improved output with respect to PSNR, SSIM, RMSE and visual quality perception.

No. of Pages : 13 No. of Claims : 10

(12) PATENT APPLICATION PUBLICATION
(19) INDIA
(22) Date of filing of Application :13/07/2021
(21) Application No.202141031333 A
(43) Publication Date : 16/07/2021

(54) Title of the invention : A SYSTEM OF COMPUTER VISION AND MACHINE LEARNING FOR OPTICAL CHARACTER RECOGNITION

(51) International classification	:G06K0009000000, G06F0040177000, G06K0009460000, G06F0016901000, B25J0009160000
(31) Priority Document No	:NA
(32) Priority Date	:NA
(33) Name of priority country	:NA
(86) International Application No	:NA
Filing Date	:NA
(87) International Publication No	: NA
(61) Patent of Addition to Application Number	:NA
Filing Date	:NA
(62) Divisional to Application Number	:NA
Filing Date	:NA

(71)**Name of Applicant :**
1)SRIVIDHYA E
Address of Applicant :D/o. S ELANGOVAN, DEPARTMENT OF COMPUTER SCIENCE AND ENGINEERING, FACULTY OF COMPUTING, SATHYABAMA INSTITUTE OF SCIENCE AND TECHNOLOGY (DEEMED TO BE UNIVERSITY), JEPPIAR NAGAR, RAJIV GANDHI SALAI, CHENNAI 600119, TAMIL NADU, INDIA Tamil Nadu India
2)Dr. KISHORE VERMA S
3)SONYA A
4)GOKULAKRISHNAN S
5)MURUGANATNHAM A
6)ABRAR AHMED K
7)JAYANTHI S
8)RANJANA S
9)Dr. REVATHI A R
10)Dr. SRIDEVI D
11)MYTHREYI N R
12)Dr. MANIKANDAN J
(72)**Name of Inventor :**
1)SRIVIDHYA E
2)Dr. KISHORE VERMA S
3)SONYA A
4)GOKULAKRISHNAN S
5)MURUGANATNHAM A
6)ABRAR AHMED K
7)JAYANTHI S
8)RANJANA S
9)Dr. REVATHI A R
10)Dr. SRIDEVI D
11)MYTHREYI N R
12)Dr. MANIKANDAN J

(57) Abstract :
In the present invention, we depict an efficient and highly scalable parallel architecture to segment input images containing tabular data with and without borders into cells and reconstruct the tabular data while preserving the tabular format. Many state-of-the-art algorithms have been developed that can be used for the purpose of OCR but extracting text from images containing tables while preserving the structure of the table still remains a challenging task. The performance improvement thus made can be used to ease the tedious task of digitizing tabular data in bulk. The same architecture can be used for regular OCR applications to improve performance if the data is in huge quantities.

No. of Pages : 23 No. of Claims : 4

(12) PATENT APPLICATION PUBLICATION
(19) INDIA
(22) Date of filing of Application :13/07/2021
(21) Application No.202141031334 A
(43) Publication Date : 16/07/2021

(54) Title of the invention : BABY WEANING APPLIANCE

(51) International classification	:A23K0050600000, A01K0019000000, A61C0007100000, A01K0067020000, A47D0013080000
(31) Priority Document No	:NA
(32) Priority Date	:NA
(33) Name of priority country	:NA
(86) International Application No	:NA
Filing Date	:NA
(87) International Publication No	: NA
(61) Patent of Addition to Application Number	:NA
Filing Date	:NA
(62) Divisional to Application Number	:NA
Filing Date	:NA

(71)**Name of Applicant :**
1)MEENAKSHI ACADEMY OF HIGHER EDUCATION AND RESEARCH
Address of Applicant :NO.12, VEMBULIAMMAN KOIL STREET WEST K.K. NAGAR CHENNAI TAMIL NADU INDIA 600 078 Tamil Nadu India
(72)**Name of Inventor :**
1)DR. PREETHI MURALI
2)DR.SIVAPATHASUNDHARAMBALASUNDHARAM

(57) Abstract :
APPLICANT: MEENAKSHI ACADEMY OF HIGHER EDUCATION AND RESEARCH TITLE: BABY WEANING APPLIANCE ABSTRACT The present invention discloses a Baby weaning Appliance for developing high discomfort and losing euphoric feel during breast feeding among children and thereby slowly weaning out of breast feeding habit. The Baby weaning Appliances of the present invention comprises of characterized Baby weaning guard[1] and an head strap[2]. The characterized Baby weaning guard [1] is adapted to be positioned on maxillary teeth and palate, and comprises of structure in a shape of maxillary arch with palate of customized size. The head strap[2] is adapted to help in retaining the Baby weaning guard [1] in place, and comprises of strap removable fixed to the Baby weaning guard [1] by connecting means on characterized position of between deciduous upper canine and molar region on either side of the Baby weaning guard [1].

No. of Pages : 10 No. of Claims : 5

(12) PATENT APPLICATION PUBLICATION
(19) INDIA
(22) Date of filing of Application :13/07/2021
(21) Application No.202141031335 A
(43) Publication Date : 16/07/2021

(54) Title of the invention : SOFT-BITE APPLIANCE

(51) International classification	:A47D0013080000, B65D0063100000, A63B0033000000, A47D0013020000, G06Q0050200000
(31) Priority Document No	:NA
(32) Priority Date	:NA
(33) Name of priority country	:NA
(86) International Application No	:NA
Filing Date	:NA
(87) International Publication No	: NA
(61) Patent of Addition to Application Number	:NA
Filing Date	:NA
(62) Divisional to Application Number	:NA
Filing Date	:NA

(71)**Name of Applicant :**
1)MEENAKSHI ACADEMY OF HIGHER EDUCATION AND RESEARCH
Address of Applicant :NO.12, VEMBULIAMMAN KOIL STREET WEST K.K. NAGAR CHENNAI TAMIL NADU INDIA 600 078 Tamil Nadu India
(72)**Name of Inventor :**
1)DR. PREETHI MURALI
2)DR.SIVAPATHASUNDHARAMBALASUNDHARAM

(57) Abstract :
APPLICANT: MEENAKSHI ACADEMY OF HIGHER EDUCATION AND RESEARCH TITLE: SOFT-BITE APPLIANCE ABSTRACT The present invention discloses a Baby Soft-bite Appliance to avoid sharp bite by baby™s teeth on mother™s skin during breastfeeding thereby enabling comfortable and confident feeding by mother to baby. The Baby Soft-bite Appliance of the present invention comprises of characterized Soft-bite shield[1] and an head strap[2]. The characterized Soft-bite shield [1] is adapted to be cover maxillary arch, and configured to acts a barrier in avoiding direct contact of baby™s erupting tooth with mother™s skin and comprises of structure in a shape of maxillary arch of customized size. The head strap[2] is adapted to help in retaining the Soft-bite shield [1] in place, and comprises of strap removable fixed to the Soft-bite shield [1] by connecting means on characterized position of between deciduous upper canine to molar region in buccal aspect on either side of the Soft-bite shield [1].

No. of Pages : 10 No. of Claims : 5

(12) PATENT APPLICATION PUBLICATION
(21) Application No.202141031338 A
(19) INDIA
(22) Date of filing of Application :13/07/2021
(43) Publication Date : 16/07/2021

(54) Title of the invention : TO EXPLORE THE INFLUENCE OF MINERAL ADMIXTURES LIKE FLY ASH AND GGBS IN PORE STRUCTURE OF CONCRETE

(51) International classification	:C04B0028080000, C04B0028020000, C04B0111100000, C04B0111000000, A61B0006030000	(71)**Name of Applicant :** **1)Dr. T M Mohan Kumar** Address of Applicant :Professor, School of civil engineering, REVA University Karnataka India (72)**Name of Inventor :** **1)Dr. T M Mohan Kumar**
(31) Priority Document No	:NA	
(32) Priority Date	:NA	
(33) Name of priority country	:NA	
(86) International Application No	:NA	
Filing Date	:NA	
(87) International Publication No	: NA	
(61) Patent of Addition to Application Number	:NA	
Filing Date	:NA	
(62) Divisional to Application Number	:NA	
Filing Date	:NA	

(57) Abstract :
Concrete is the most used material in the world next to water and food materials. It is the evidence for the civilization. But the production of concrete leading to environmental degradation and pollution since it involves emission of CO2, which is the one of the reasons for global warming. And the industries such has as thermal power plants and steel manufacturing industries produces lots of fly ash GGBS, which are by products and disposing of these materials was big problem. The main objective of present study is to investigate the effect of fly ash and GGBS on micro structural properties. The concrete mixes were prepared by replacing 30% of cement with fly ash, GGBS and 1.2% super plasticizer (conplast SP430) and water to cement ratio 0.45 were maintained for mix design of M35 grade concrete. This study investigate the performance of cement on X-ray computed tomography (X-CT) to understand the effect of fly ash and GGBS on porosity of concrete at different ages. From the present study it can be conclude X-CT images it was observed that concrete with GGBS showed improvements in the micro structural properties such as morphology and porosity of concrete at the different ages.

No. of Pages : 6 No. of Claims : 2

(12) PATENT APPLICATION PUBLICATION
(21) Application No.202141031340 A
(19) INDIA
(22) Date of filing of Application :13/07/2021
(43) Publication Date : 16/07/2021

(54) Title of the invention : USE OF COAL ASH TO MANUFACTURE MUD BRICKS

(51) International classification	:C04B0033135000, E01C0005220000, G06Q0010060000, C04B0007240000, C04B0033132000
(31) Priority Document No	:NA
(32) Priority Date	:NA
(33) Name of priority country	:NA
(86) International Application No	:NA
Filing Date	:NA
(87) International Publication No	: NA
(61) Patent of Addition to Application Number	:NA
Filing Date	:NA
(62) Divisional to Application Number	:NA
Filing Date	:NA

(71)**Name of Applicant :**
1)Dr. Y. Ramalinga Reddy
Address of Applicant :Professor & Director, School of civil engineering, REVA University Karnataka India
(72)**Name of Inventor :**
1)Dr. Y. Ramalinga Reddy
2)Mr. Ajaybhaskar Reddy
3)Mr. Abhishek Gowda S

(57) Abstract :
Abstract: Waste has been a major issue affecting the society as the country grows and evolves. New materials and modern equipment are used which leads to generation of waste. Waste has been a huge impact on the society at this point. Through this project we aim to maximize the utilization of waste at the place of generation and to minimize the waste gathering. We decided to considered bricks as our material due to its history and its common utilization by everyone and in every construction project. Hence an attempt is made to utilize the waste material (COAL ASH) that is generated during the manufacturing process of bricks to utilize it as a composite mix to the regular Mud bricks and to check for compressive strength, water absorption, shape, size, colour, impact strength, efflorescence, soundness test and to determine whether this composite bricks are able to meet the required parameters like physical and strength properties by considering different percentage of waste to the clay bricks and to find an alternative solution in case the desired parameters is not obtained to satisfy the required criteria. This project mainly deals with integrating of coal ash as a mixture with clay during the manufacturing process at varying percentages of 10,20,30,40,50, 60 % with the rest being clay. By the end of this experiment the strength and other parameters are determined and to check at what percentage of mixing the external agent (coal ash) to the clay to form bricks and these bricks lose its strength. At the end of 60% utilization of coal ash we try to use 10% cement to increase the strength and the comparison of this bricks are studied.

No. of Pages : 7 No. of Claims : 2

(12) PATENT APPLICATION PUBLICATION
(21) Application No.202141031341 A
(19) INDIA
(22) Date of filing of Application :13/07/2021
(43) Publication Date : 16/07/2021

(54) Title of the invention : ENERGY HARVESTED USING PIEZOELECTRIC TECHNOLOGY FOR ROADS

(51) International classification	:G08G0001065000, G08G0001020000, G08G0001017000, G01G0019020000, G08G0001042000
(31) Priority Document No	:NA
(32) Priority Date	:NA
(33) Name of priority country	:NA
(86) International Application No	:NA
Filing Date	:NA
(87) International Publication No	: NA
(61) Patent of Addition to Application Number	:NA
Filing Date	:NA
(62) Divisional to Application Number	:NA
Filing Date	:NA

(71)**Name of Applicant :**
1)Nikita Moodi
Address of Applicant :Assistant Professor, School of civil engineering, REVA University Karnataka India
(72)**Name of Inventor :**
1)Nikita Moodi

(57) Abstract :
Abstract Traffic censuses, which investigate traffic volumes and vehicle movements, provide essential data that will allow planners to develop more efficient road improvement plans and thus help reduce carbon dioxide (CO2) emissions. In this census, the traffic volumes of Japan™s highways, national roads, and prefectural roads are investigated. However, as of the latest (2015) road traffic census report, more than 45% of the censuses were still being counted manually. Here, it can be seen that the rate of the 2 Sensors and Materials, counting process declined by only 10% in the last 10 years, and that the contributions of mechanized counting processes remain low, primarily because such vehicle counters are expensive, require large machines, and have long setup times. Image-based vehicle-counting methods that use existing cameras, including surveillance cameras, have been attracting significant attention recently. However, although some parties feel it would be ideal to count vehicles via such existing cameras, others have voiced concerns about the need to protect drivers™ privacy. Moreover, it is difficult for camera systems to count vehicles correctly in dark locations or at night. Other vehicle-monitoring methods include recording and analyzing the noise of moving vehicles via microphone arraysInfrared-type traffic counters have also been put into practical use, but these counters are not widely used because they require the construction of installation such as standing poles on roads. In this paper, we propose an inexpensive, easy-to-use vehicle-counting sensor system that can be can be employed simply by placing the sensor on a sidewalk adjacent to the road under observation. Our system uses a piezoelectric sensor to collect roadway vibrations caused by passing vehicles. More specifically, the piezoelectric device converts vibrations to electric signals.

No. of Pages : 7 No. of Claims : 3

(12) PATENT APPLICATION PUBLICATION
(21) Application No.202141031360 A
(19) INDIA
(22) Date of filing of Application :13/07/2021
(43) Publication Date : 16/07/2021

(54) Title of the invention : AN AI BASED AUTOMATED PRODUCT / SERVICE PURCHASE PORTAL RECOMMENDATION SYSTEM BY MEASURING RATINGS, COST AND DISCOUNT OFFER

(51) International classification	:G06Q0030020000, G06Q0030060000, G06F0040300000, G06Q0030080000, G06N0003020000
(31) Priority Document No	:NA
(32) Priority Date	:NA
(33) Name of priority country	:NA
(86) International Application No	:NA
Filing Date	:NA
(87) International Publication No	: NA
(61) Patent of Addition to Application Number	:NA
Filing Date	:NA
(62) Divisional to Application Number	:NA
Filing Date	:NA

(71)**Name of Applicant :**
1)Dr. J. KATYAYANI
Address of Applicant :Professor, Department of Business Management, Sri Padamavati Mahila Vishvavidyalayam, Padmavati Nagar, Tirupathi-517502 Ph: 9494490708 E-Mail: jkatyayani@gmail.com Andhra Pradesh India
(72)**Name of Inventor :**
1)Dr. J. KATYAYANI

(57) Abstract :
ABSTRACT OF THE INVENTION An Artificial Intelligence based product / service purchase portal recommendation system involves four phases namely information extraction which retrieves reviews and ratings from multiple vendor sites, a semantic analyzer phase which analyze the real positive and negative comments, a validation phase which validates the extracted information against its truthiness and finally a recommendation phase where it suggests the final best site to buy a product / service which is measured based on cumulative average reviews and ratings fetched from multiple vendors site. Initially the customer feeds the product / service that he/she likes to purchase in this Artificial Intelligence based product / service purchase portal recommendation system. By using the information provided by the user, the system proceeds to extract certain factors such as Ratings, Reviews, Price and Discount Offer from multiple E-Commerce websites. Then semantic analysis of product / services review and rating which has been extracted from several online vendors site is performed in order to infer the actual meaning and description of product / services review so that it is possible to predict the product / service™s goodness and badness. After this extraction process, a validation process takes place in order to check whether how truthiness existing in the information received and it also measure the accuracy level of semantic analysis that we do. Once all the above process has been successfully completed, the system will recommend the best E-Commerce website to the buy the product / services along with the key terminologies such as brand name, rating, review, best price and best discount offer among the all-existing E-Commerce portal.

No. of Pages : 15 No. of Claims : 1

(12) PATENT APPLICATION PUBLICATION
(21) Application No.202141031393 A
(19) INDIA
(22) Date of filing of Application :13/07/2021
(43) Publication Date : 16/07/2021

(54) Title of the invention : VERTICAL RAINWATER FILTER USING CHEMICAL AND BIOLOGICAL MEDIA

(51) International classification	:C02F0001000000, C02F0009000000, C02F0003060000, C02F0001280000, C02F0101200000
(31) Priority Document No	:NA
(32) Priority Date	:NA
(33) Name of priority country	:NA
(86) International Application No	:NA
Filing Date	:NA
(87) International Publication No	: NA
(61) Patent of Addition to Application Number	:NA
Filing Date	:NA
(62) Divisional to Application Number	:NA
Filing Date	:NA

(71)**Name of Applicant :**
1)Mr. Ajaybhaskar Reddy
Address of Applicant :Assistant Professor, School of civil engineering, REVA University Karnataka India
(72)**Name of Inventor :**
1)Mr. Ajaybhaskar Reddy
2)Dr. Y. Ramalinga Reddy
3)Mr. Jayachandra

(57) Abstract :
Abstract One of the major forms of precipitation in India is rainfall. Rainfall is an important component in water resources planning and management. Proper planning and utilization of naturally available rainfall can give solution to water scarcity problem in future. This paper presents about the filtration of rainwater by designing an appropriate filter. The rainwater from roof top is treated after the first flush by a simple method that would reduce the demand of water for both public water supplies and the wastewater treatment facilities. The filtration based on physical, chemical, and biological filter media was effective to remove heavy metals as well as solids. The filtered rainwater can be stored, and excess water can be discharged in recharge pits. The water quality of rainwater after filtration through designed filter were found to be within the permissible limit as per IS standards. The system appears to be promising since the treatment of rainwater from roof top is economical and effective in removing solids and other impurities making rainwater to potable water.

No. of Pages : 6 No. of Claims : 4

(12) PATENT APPLICATION PUBLICATION
(21) Application No.202141031401 A
(19) INDIA
(22) Date of filing of Application :13/07/2021
(43) Publication Date : 16/07/2021

(54) Title of the invention : SSR PRIMER ASSOCIATED WITH HIGH TEMPERATURE RESISTANCE IN RICE (ORYZA SATIVA L.)

(51) International classification	:C12Q0001689500, C12N0015820000, C12Q0001687600, A01H0001040000, C12N0009020000	(71)**Name of Applicant :** **1)Kaushik Prashant** Address of Applicant :H. No. 29, Sector 5, Urban Estate, Kurukshetra 136118, Haryana, India Haryana India **2)Arpitha Shankar Bandi** **3)Srividhya Akkareddy**
(31) Priority Document No	:NA	
(32) Priority Date	:NA	
(33) Name of priority country	:NA	
(86) International Application No	:NA	
Filing Date	:NA	
(87) International Publication No	: NA	
(61) Patent of Addition to Application Number	:NA	
Filing Date	:NA	
(62) Divisional to Application Number	:NA	
Filing Date	:NA	

(72)**Name of Inventor :**
1)Srividhya Akkareddy
2)Arpitha Shankar Bandi
3)Kaushik Prashant

(57) Abstract :
SSR primer associated with high temperature resistance in Rice (Oryza sativa L.) Genetic diversity is the foundation of the genetic improvement of crop plants as it serves as a reservoir for identifying superior lines that can withstand heat stress. Under molecular analysis carried out in the present invention, a set of 51 reported and as well new SSR and genic markers were employed to assess the genetic diversity among the 74 rice genotypes. These markers gave good amplification with prominent alleles at 57°C and 59°C. Geneic SSR primer associated with high temperature resistance, wherein the primer is selected from the group consisting of RGNMS264, TTCF/TTWR/TTMR, RGNMS2015, RGNMS2168, SVHT801, RGNMS3524, SVHT665.

No. of Pages : 23 No. of Claims : 3

(12) PATENT APPLICATION PUBLICATION
(21) Application No.202141031402 A
(19) INDIA
(22) Date of filing of Application :13/07/2021
(43) Publication Date : 16/07/2021

(54) Title of the invention : A SYSTEM FOR SHARING IMAGES AND MULTIMEDIA MESSAGE IN ACLOUD NETWORK

(51) International classification	:H04L0029080000, G06F0021620000, H04L0029060000, H04L0012580000, G06F0021600000
(31) Priority Document No	:NA
(32) Priority Date	:NA
(33) Name of priority country	:NA
(86) International Application No	:NA
Filing Date	:NA
(87) International Publication No	: NA
(61) Patent of Addition to Application Number	:NA
Filing Date	:NA
(62) Divisional to Application Number	:NA
Filing Date	:NA

(71)**Name of Applicant :**
1)Dr.K.Dhana Sree Devi
Address of Applicant :Associate Professor, Department of Computer Science And Engineering, CVR College of Engineering, Hyderabad, Telangana, India. Pin Code: 501510 Telangana India
2)Mr.Chunduru Anilkumar
3)Dr.D.Shanthi
4)Dr.Nemi Chand Singh
5)Dr.Sushma Jaiswal
6)Mr.Tarun Jaiswal
7)Mr.Pradeep Raj Savarapu
8)Dr.E.Sreedevi
9)Ms.Jaladi Snehalatha
10)Mr.Ganesh Davanam
(72)**Name of Inventor :**
1)Dr.K.Dhana Sree Devi
2)Mr.Chunduru Anilkumar
3)Dr.D.Shanthi
4)Dr.Nemi Chand Singh
5)Dr.Sushma Jaiswal
6)Mr.Tarun Jaiswal
7)Mr.Pradeep Raj Savarapu
8)Dr.E.Sreedevi
9)Ms.Jaladi Snehalatha
10)Mr.Ganesh Davanam

(57) Abstract :
A SYSTEM FOR SHARING IMAGES AND MULTIMEDIA MESSAGE IN A CLOUD NETWORK [029] The present invention discloses a system for sharing images and 5 multimedia message in a cloud network. The system includes, but not limited to, a first terminal remote from a first user provided with a selection from among a plurality of possible access rights to generate a granted access right set which contains a set of access rights to a remotely stored images or multimedia messages; a processing unit for permitting input of another user with his/her 10 electronic address associated with the granted access right set; a communication unit for transmitting the granted access right set and associated another user electronic address. Accompanied Drawing [FIG. 1]

No. of Pages : 18 No. of Claims : 9

(12) PATENT APPLICATION PUBLICATION
(21) Application No.202141031417 A
(19) INDIA
(22) Date of filing of Application :13/07/2021
(43) Publication Date : 16/07/2021

(54) Title of the invention : RECONFIGURABLE DEPLOYER SYSTEM AND METHOD TO EJECT CUBESATS INTO ORBITS AND PERFORM SCIENTIFIC EXPERIMENTS

(51) International classification	:B64G0001640000, B64G0001000000, B64G0001100000, H04B0007185000, B64G0001400000
(31) Priority Document No	:NA
(32) Priority Date	:NA
(33) Name of priority country	:NA
(86) International Application No	:NA
Filing Date	:NA
(87) International Publication No	: NA
(61) Patent of Addition to Application Number	:NA
Filing Date	:NA
(62) Divisional to Application Number	:NA
Filing Date	:NA

(71)**Name of Applicant :**
1)DHRUVA SPACE PRIVATE LIMITED
Address of Applicant :#702, Block I, whitehouse building, Begumpet, Hyderabad, Telangana - 500016, India. Telangana India

(72)**Name of Inventor :**
1)SANKALP JAIN
2)RAHUL RAVIKUMAR
3)SANJAY NEKKANTI
4)VISHAL LATHA BALAKUMAR
5)ABHAY EGOOR

(57) Abstract :
Exemplary embodiments of a reconfigurable deployer system to eject CubeSats into orbits and perform scientific experiments, comprising: a container unit configured to accommodate one or more CubeSats and one or more hosted payloads, one or more deployment springs and a mechanism configured to eject the one or more CubeSats into one or more orbits, the one or more hosted payloads configured to perform one or more scientific experiments in the low earth orbit after ejecting the one or more CubeSats; and data processing chipsets configured to collect data from the hosted payloads and transmit the collected data to one or more ground stations via a space launch vehicle, the space launch vehicle configured to provide required power for functioning of the more hosted payloads. FIG. 1

No. of Pages : 19 No. of Claims : 8

(12) PATENT APPLICATION PUBLICATION
(21) Application No.202141031419 A
(19) INDIA
(22) Date of filing of Application :13/07/2021
(43) Publication Date : 16/07/2021

(54) Title of the invention : ANNULAR COMBUSTOR WITH ADJUSTABLE OUTER FLAME TUBE FOR GAS TURBINE ENGINE

(51) International classification	:F23R0003420000, F23R0003500000, F23R0003040000, F02C0007260000, F23D0003100000	(71)**Name of Applicant :** **1)Sathish Dharmalingam (Beneficiary of GTU SSIP IP Filing Scheme)** Address of Applicant :2/215-A, Nakkirer Street, Sembanarkoil - 609309, Nagapattinam, Tamilnadu, India Tamil Nadu India **2)Dr. Kartik Dolarkumar Kothari (Beneficiary of GTU SSIP IP Filing Scheme)** (72)**Name of Inventor :** **1)Sathish Dharmalingam (Beneficiary of GTU SSIP IP Filing Scheme)**
(31) Priority Document No	:NA	
(32) Priority Date	:NA	
(33) Name of priority country	:NA	
(86) International Application No	:NA	
Filing Date	:NA	
(87) International Publication No	: NA	
(61) Patent of Addition to Application Number	:NA	
Filing Date	:NA	
(62) Divisional to Application Number	:NA	
Filing Date	:NA	

(57) Abstract :
An annular combustor (1) for a gas turbine engine of aircraft having an outer flame tube (10) that is movable axially from a forward position at the compressor side (3) to a rear position at the turbine side (4) by double acting cylinders (16) to initiate the complete combustion of fuel which reduces the emission of unburned hydrocarbons. The position of the outer flame tube (10) is towards the compressor side (3) at high inlet air pressure and it is moved towards the turbine side (4) when there is low inlet air pressure. The engine control unit sends a signal to the double acting cylinders (16) which moves the outer flame tube (10) from the compressor side (3) to the turbine side (4) and vice versa.

No. of Pages : 37 No. of Claims : 6

(12) PATENT APPLICATION PUBLICATION
(21) Application No.202141031420 A
(19) INDIA
(22) Date of filing of Application :13/07/2021
(43) Publication Date : 16/07/2021

(54) Title of the invention : P-SERIES SATELLITE SYSTEM AND METHOD FOR ORBIT INSERTION OF MINIATURIZED SATELLITES AND ESTABLISHING UNINTERRUPTED NETWORK

(51) International classification	:H04B0007185000, B64G0001100000, H04B0010118000, H04W0084060000, B64G0001640000
(31) Priority Document No	:NA
(32) Priority Date	:NA
(33) Name of priority country	:NA
(86) International Application No	:NA
Filing Date	:NA
(87) International Publication No	: NA
(61) Patent of Addition to Application Number	:NA
Filing Date	:NA
(62) Divisional to Application Number	:NA
Filing Date	:NA

(71)**Name of Applicant :**
1)DHRUVA SPACE PRIVATE LIMITED
Address of Applicant :#702, Block I, whitehouse building, Begumpet, Hyderabad, Telangana - 500016, India. Telangana India

(72)**Name of Inventor :**
1)RAHUL RAVIKUMAR
2)VISHAL LATHA BALAKUMAR
3)SANJAY NEKKANTI
4)KRISHNA TEJA PENAMAKURU
5)ABHAY EGOOR

(57) Abstract :
Exemplary embodiments of a P-series satellite system configured to orbit insertion of miniaturized satellites and establish uninterrupted a Lunar-Earth communication network, comprising: a P-30 parent satellite placed in a lunar orbit and configured to deploy children CubeSats in the lunar orbit at locations enroute to the Moon; the children CubeSats configured to form a constellation in the lunar orbit to enable communication between lunar surface assets, the earth and P30 parent satellite, the P-30 parent satellite further placed in a halo orbit at the lagrangian point L2 along with spacecrafts; and an inter-satellite link is developed using a network to enable an autonomous data transmission between the children CubeSats and the P-30 parent satellite to be downlinked to one or more ground stations with a minimal latency, the P-30 parent satellite configured establish Lunar-Earth communication network and provide real-time communication access to a lunar far side to the ground stations. FIG. 1

No. of Pages : 26 No. of Claims : 11

(12) PATENT APPLICATION PUBLICATION
(21) Application No.202141031429 A
(19) INDIA
(22) Date of filing of Application :13/07/2021
(43) Publication Date : 16/07/2021

(54) Title of the invention : AN IMPROVED PROCESS FOR THE PREPARATION OF AN INTERMEDIATE OF BALOXAVIR MORBOXIL

(51) International classification	:C07D0471040000, A61K0031536500, C07J0071000000, C07D0243140000, C07C0045460000
(31) Priority Document No	:NA
(32) Priority Date	:NA
(33) Name of priority country	:NA
(86) International Application No	:NA
Filing Date	:NA
(87) International Publication No	: NA
(61) Patent of Addition to Application Number	:NA
Filing Date	:NA
(62) Divisional to Application Number	:NA
Filing Date	:NA

(71)**Name of Applicant :**
1)Natco Pharma Limited
Address of Applicant :Natco House, Road No.2 Banjara Hills, Hyderabad. Telangana India
(72)**Name of Inventor :**
1)TALASANI SHYAM SUNDER REDDY
2)BUDIDETI SHANKAR REDDY
3)KOTTE RAJASHEKAR
4)SATTI VENKATA REDDY
5)MALA NAGENDRA
6)MUDDASANI PULLA REDDY
7)NANNAPANENI VENKAIAH CHOWDARY

(57) Abstract :
ABSTRACT The present invention provides an improved process for the preparation of (12aR)-3,4,12,12a-tetrahydro-7-(phenylmethoxy)-1H-[1,4]oxazino[3,4-c] pyrido[2,1-f] [1,2,4]triazine-6,8-dione of Formula (I). Formula I which is a key intermediate in the synthesis of Baloxavir Morboxil of Formula (II).

No. of Pages : 21 No. of Claims : 10

(12) PATENT APPLICATION PUBLICATION
(21) Application No.202141031447 A
(19) INDIA
(22) Date of filing of Application :13/07/2021
(43) Publication Date : 16/07/2021

(54) Title of the invention : SYSTEM FOR PLANT DISEASE DETECTION

(51) International classification	:B64C0039020000, G01N0033000000, G06K0009620000, G06Q0050220000, G01N0033500000
(31) Priority Document No	:NA
(32) Priority Date	:NA
(33) Name of priority country	:NA
(86) International Application No	:NA
Filing Date	:NA
(87) International Publication No	: NA
(61) Patent of Addition to Application Number	:NA
Filing Date	:NA
(62) Divisional to Application Number	:NA
Filing Date	:NA

(71)**Name of Applicant :**
1)Dr.Santhosh Kumar G
Address of Applicant :Principal/Director East West College of Engineering CA Site No. 13, 13th A Main Road, Sector A, Major Akshay Kumar Road, Yelahanka New Town, Bengaluru 560064 Karnataka India
2)Mr. Vinay P
3)Suhandas
(72)**Name of Inventor :**
1)Dr.Santhosh Kumar G
2)Mr. Vinay P
3)Suhandas

(57) Abstract :
ABSTRACT Disease has certain stages, but as per the survey most of the researches have focused mainly on disease detection and their classification. Thus, the design and implementation of a system that can detect a particular stage of a disease would be of great interest. In addition, these systems should possess capability to suggest a suitable measure depending on the identified disease stage. Detection of a disease 165 in an early stage, also known as disease forecasting, may help agriculturists to take proper precautions and thus reduce damage percentage. A real-time database will be created of Plant leaf disease using a drone and acquiring the leaf images from the Digital camera and analyse plant leaf diseases and work undertaken to detect and classify plant leaf diseases.

No. of Pages : 10 No. of Claims : 2

(12) PATENT APPLICATION PUBLICATION
(19) INDIA
(22) Date of filing of Application :13/07/2021
(21) Application No.202141031458 A
(43) Publication Date : 16/07/2021

(54) Title of the invention : INTERNET OF THINGS BASED INTELLIGENT IRRIGATION SYSTEM USING CLOUD COMPUTING

(51) International classification	:A01G0025160000, H04L0029080000, A01G0025020000, H04L0029060000, G06F0009500000
(31) Priority Document No	:NA
(32) Priority Date	:NA
(33) Name of priority country	:NA
(86) International Application No	:NA
Filing Date	:NA
(87) International Publication No	: NA
(61) Patent of Addition to Application Number	:NA
Filing Date	:NA
(62) Divisional to Application Number	:NA
Filing Date	:NA

(71)**Name of Applicant :**
1)Dr. G. Kavitha
Address of Applicant :Associate Professor Dept. of Information Technology, B.S. Abdur Rahman Crescent Institute of Science and Technology, Vandalur, Chennai - 600048. Tamil Nadu India
2)Dr. P. Latchoumy
3)Dr. I. Sathik Ali
4)Dr. M. Kabeer
5)Dr. N. Prakash
6)Dr. R. Priyadarshini
7)Ms. Nabeena Ameen
8)Mr. N. Rajendran
9)Dr. K.A. Varun Kumar
10)Dr.Piyush
(72)**Name of Inventor :**
1)Dr. G. Kavitha
2)Dr. P. Latchoumy
3)Dr. I. Sathik Ali
4)Dr. M. Kabeer
5)Dr. N. Prakash
6)Dr. R. Priyadarshini
7)Ms. Nabeena Ameen
8)Mr. N. Rajendran
9)Dr. K.A. Varun Kumar
10)Dr.Piyush

(57) Abstract :
ABSTRACT The Internet of Things Intelligent Irrigation System invention describes how to use cloud computing in Intelligent Irrigation Systems. An intelligent cloud data center, intelligent cloud service platform, Internet of Things terminal management controller, and an irrigation device are all included in the system. The intelligent irrigation cloud data center is connected to the Internet of Things terminal management controller by way of a wireless network, and the irrigation device is connected to the Internet of Things terminal management controller with the help of an irrigation controller device. The Invention is geared toward finding water-saving methods in agriculture and implementing them using IoT-enabled machine learning techniques. In this prototype, information that has been previously processed is being transferred from the cloud server to the farmer's mobile handset ahead of time.

No. of Pages : 12 No. of Claims : 1

(12) PATENT APPLICATION PUBLICATION
(19) INDIA
(22) Date of filing of Application :13/07/2021
(21) Application No.202141031482 A
(43) Publication Date : 16/07/2021

(54) Title of the invention : PRESSURE RELIEF SYSTEM IN UNDERGROUND HIGH-SPEED TUNNELS

(51) International classification	:E21F0001000000, E21D0009140000, E21F0017000000, F16K0017040000, B61B0013100000
(31) Priority Document No	:NA
(32) Priority Date	:NA
(33) Name of priority country	:NA
(86) International Application No	:NA
Filing Date	:NA
(87) International Publication No	: NA
(61) Patent of Addition to Application Number	:NA
Filing Date	:NA
(62) Divisional to Application Number	:NA
Filing Date	:NA

(71)**Name of Applicant :**
1)MOHAMMED ASADULLAH THAKUR
Address of Applicant :Professor, Department of Mechanical Engineering, Lords Institute of Engineering and Technology, Survey No. 32, Near Police Academy, Appa Junction, Himayathsagar, Hyderabad, Telangana 500091 Telangana India
2)SHER AFGHAN KHAN
3)AZEEM HAFIZ P A
4)KAMRAN RAZA KHAN
5)MANZOORE ELAHI M SOUDAGAR
(72)**Name of Inventor :**
1)MOHAMMED ASADULLAH THAKUR
2)SHER AFGHAN KHAN
3)AZEEM HAFIZ P A
4)KAMRAN RAZA KHAN
5)MANZOORE ELAHI M SOUDAGAR

(57) Abstract :
ABSTRACT Embodiment of the present disclosure is related to the complex wave pattern of compression and expansion inside the high-speed train tunnel inducing micro pressure, unsafe conditions, and discomfort to passengers. The high-speed train on entering the tunnel generates compression wave due to piston effect which leads to complex wave pattern inside the tunnel. Therefore, a number of open relief valves should be installed in a tunnel at an optimum distance to overcome the compression effect. The pressure load is directly related to L/D ratio, gap ratio and the curvature of train body. To make the tunnels safe a pressure relief device is configured in a high-speed tunnel for venting out an extra pressure through a bypass space in said high-speed tunnel. The device comprises an open relief valve in an inner channel to overcome a compression effect, thereby providing stability to maintain safe, comfortable and relieved atmosphere.

No. of Pages : 18 No. of Claims : 7

(12) PATENT APPLICATION PUBLICATION
(21) Application No.202141031518 A
(19) INDIA
(22) Date of filing of Application :13/07/2021
(43) Publication Date : 16/07/2021

(54) Title of the invention : IOT BASED CROP MONITORING SCHEME USING SMART DEVICE WITH MACHINE LEARNING METHODOLOGY

(51) International classification	:G06Q0050020000, H04L0029080000, G06Q0010040000, A01G0025160000, H04N0007180000
(31) Priority Document No	:NA
(32) Priority Date	:NA
(33) Name of priority country	:NA
(86) International Application No	:PCT//
Filing Date	:01/01/1900
(87) International Publication No	: NA
(61) Patent of Addition to Application Number	:NA
Filing Date	:NA
(62) Divisional to Application Number	:NA
Filing Date	:NA

(71)**Name of Applicant :**
1)Dr. SHYLAJA S L
Address of Applicant :PRINCIPAL, EAST WEST POLYTECHNIC, NO. 63, OFF MAGADI ROAD, VISHWANEEDAM POST, BEL LAYOUT, ANJANA NAGAR, BEL LAYOUT, PHASE 2, BEDARAHALLI, BENGALURU, KARNATAKA 560091 Karnataka India
2)Dr. SHAIK FAIROOZ
3)Dr. J. VENKATESH
4)Dr. D. SUNITHA
5)Dr. R. PRAKASH RAO
6)Dr.M.RAMKUMAR PRABHU
(72)**Name of Inventor :**
1)Dr. SHYLAJA S L
2)Dr. SHAIK FAIROOZ
3)Dr. J. VENKATESH
4)Dr. D. SUNITHA
5)Dr. R. PRAKASH RAO
6)Dr.M.RAMKUMAR PRABHU

(57) Abstract :
IoT-based crop monitoring scheme using a smart device with machine learning methodology. The proposed invention is the Internet of Things (IoT) is the most considerable medium for all smart applications, in which it provides huge support to the agricultural industry in a fine manner. The proposed invention is intended to design the new machine learning-enabled Smart Internet of Things medium to support the agricultural field in a proper way. In the proposed invention an Intelligent Crop Monitoring Device (ICMD) is introduced to monitor the crops over the agricultural field in a 24x7 manner. This kind of monitoring device enhances the production and quality-of-service of agriculture as well as related products. The data acquired from the agriculture fields are temperature, humidity, and soil moisture level, in which these records are passed to the server unit by using an IoT module associated with the ICMD. The data available on the server can easily be monitored by the farmer from anywhere at any time. The learning model predicts the status of the crop in the field by means of analyzing the input acquired from the real-time testing input and report that to the respective farmer for taking appropriate action. For all this system is useful to the agricultural field and provides good support to farmers to monitor the crops over the agricultural field from the remote place even. By using this proposed scheme, the farmers can make accurate and efficient crop management decisions with the use of results obtained by using the Smart Device called ICMD.

No. of Pages : 21 No. of Claims : 6

(12) PATENT APPLICATION PUBLICATION
(21) Application No.202141031521 A
(19) INDIA
(22) Date of filing of Application :14/07/2021
(43) Publication Date : 16/07/2021

(54) Title of the invention : IOT BASED NEW DEVICE FOR DAIRY COW BODY CONDITION SCORING SYSTEM

(51) International classification	:A23K0050100000, A01K0029000000, A61D0017000000, G06Q0050020000, G06Q0050100000
(31) Priority Document No	:NA
(32) Priority Date	:NA
(33) Name of priority country	:NA
(86) International Application No	:NA
Filing Date	:NA
(87) International Publication No	: NA
(61) Patent of Addition to Application Number	:NA
Filing Date	:NA
(62) Divisional to Application Number	:NA
Filing Date	:NA

(71)**Name of Applicant :**
1)Dr. S. Sowmyayani
Address of Applicant :Assistant Professor, Department of Computer Science (SF) St. Mary™s College (Autonomous) Thoothukkudi, Tamilnadu. Tamil Nadu India
2)Dr. P. Arockia Jansi Rani
(72)**Name of Inventor :**
1)Dr. S. Sowmyayani
2)Dr. P. Arockia Jansi Rani

(57) Abstract :
ABSTRACT Healthcare of dairy cows is more important as all people will consume milk daily. Proper caring and feeding should be given to the cows that are very thin and very obese. Special care should be given during breeding, weaning and lactating time. The producer should increase the energy reserves of the cows before 90 days of calving. Capturing various parts of the cows and estimating BCS manually or digitally using a digital cameras is a time-consuming task. Also, this manual estimation of BCS is difficult and may lead to error. There is a drastic development in this digital world. Everything is automated using Internet of Things. There are number of sensors for various applications which are connected with some electronic devices. We use IoT technology for estimating BCS measure for dairy cows to help producers to easily estimate the BCS measure. The sensor reduces the manual estimation of BCS and helps to increase accuracy. BCS sensors can be placed at different parts of the cow™s body. The sensor replaces the manual image capturing using 3D digital camera. The score that is calculated by the IoT based BCS sensor helps the producers to identify the energy reserves of the dairy cows, to maximize milk production and reproduction efficiency; also, it is used to reduce the incidence of disease affection.

No. of Pages : 12 No. of Claims : 6

(12) PATENT APPLICATION PUBLICATION
(19) INDIA
(22) Date of filing of Application :14/07/2021

(21) Application No.202141031591 A
(43) Publication Date : 16/07/2021

(54) Title of the invention : SYSTEM AND METHOD FOR MONITORING COMPLEX STRUCTURES

(51) International classification	:G06K0009620000, G06K0009000000, G06N0003080000, G05B0023020000, G06F0016220000
(31) Priority Document No	:NA
(32) Priority Date	:NA
(33) Name of priority country	:NA
(86) International Application No	:PCT//
Filing Date	:01/01/1900
(87) International Publication No	: NA
(61) Patent of Addition to Application Number	:NA
Filing Date	:NA
(62) Divisional to Application Number	:NA
Filing Date	:NA

(71)**Name of Applicant :**
1)UPTIMEAI TECH PRIVATE LIMITED
Address of Applicant :L5, THE HIVE, VR, BENGALURU, 560048, KARNATAKA, INDIA Karnataka India
(72)**Name of Inventor :**
1)JAGADISH GATTU
2)VAMSI YALAMANCHILI

(57) Abstract :
A system (10) for monitoring complex structures (15) is disclosed. The system includes a boundary creation module (50) to create a group of elements corresponding to the complex structures to define a structure boundary. The boundary creation module collects sensor data from sensors (55) coupled to the corresponding complex structures within the structure boundary. The system includes a relation identification module (60) to determine correlation across the sensor data corresponding to the sensors within the structure boundary using a deep learning model. The relation identification module identifies interrelations between the group of elements by tracking the correlation across the sensor data using the deep learning model. The system includes an anomaly detection module (70) to identify a set of characteristics of the sensor data based on the interrelations the group of elements. The anomaly detection module detects an anomaly in the group of elements by analyzing the set of characteristics. FIG. 1

No. of Pages : 31 No. of Claims : 10

(12) PATENT APPLICATION PUBLICATION
(21) Application No.202141031659 A
(19) INDIA
(22) Date of filing of Application :14/07/2021
(43) Publication Date : 16/07/2021

(54) Title of the invention : A SYSTEM AND METHOD FOR AN ARTIFICIAL INTELLIGENCE BASED AUTOMATIC ADJUSTABLE USER COMPORT SEAT FOR TWO WHEELERS

(51) International classification	:B60N0002020000, B60N0002160000, B60N0002230000, H04L0029060000, G02B0026100000	(71)**Name of Applicant :**
(31) Priority Document No	:NA	**1)DR. Y VIJAYA KUMAR**
(32) Priority Date	:NA	Address of Applicant :PROFESSOR & PRINCIPAL GM INSTITUTE OF TECHNOLOGY, PO BOX NO 4, PB ROAD DAVANGERE-577 006 KARNATAKA, INDIA Karnataka India
(33) Name of priority country	:NA	**2)MR. SIVAPRAKASH P**
(86) International Application No	:PCT//	**3)MRS. DEEPTI PALLEDA**
Filing Date	:01/01/1900	**4)MR. HARSHA H M**
(87) International Publication No	: NA	**5)MR. MALLIKARJUNA M S**
(61) Patent of Addition to Application Number	:NA	(72)**Name of Inventor :**
Filing Date	:NA	**1)DR. Y VIJAYA KUMAR**
(62) Divisional to Application Number	:NA	**2)MR. SIVAPRAKASH P**
Filing Date	:NA	**3)MRS. DEEPTI PALLEDA**
		4)MR. HARSHA H M
		5)MR. MALLIKARJUNA M S

(57) Abstract :
A system and method for an artificial intelligence based automatic adjustable user comport seat for two wheelers. is to provide an AI based automated bike seat adjustment in two wheelers that permits independent adjustment of seat angle or seat lateral position with respecting driver requirement. To achieve the purpose, the present invention includes an n-number of pneumatic or electrically operated linear adjustment mechanisms with its one end attached in chassis and another end attached in under the seat; three or more linear actuators attached to achieve user liked performance and comfort. the adjustment for the seat is achieved by adjusting the position of the linear actuators; wherein linear actuator is to be operated and controlled by integrated AI system to gain better accuracy.

No. of Pages : 15 No. of Claims : 5

(12) PATENT APPLICATION PUBLICATION
(21) Application No.202141031672 A
(19) INDIA
(22) Date of filing of Application :14/07/2021
(43) Publication Date : 16/07/2021

(54) Title of the invention : SYSTEM AND METHOD FOR AUTOMATED EVALUATION OF DESCRIPTIVE MULTIMODAL ANSWERS

(51) International classification	:G06N0020000000, G16H0050200000, G06N0005020000, G06F0040205000, G06F0016440000
(31) Priority Document No	:NA
(32) Priority Date	:NA
(33) Name of priority country	:NA
(86) International Application No	:PCT//
Filing Date	:01/01/1900
(87) International Publication No	: NA
(61) Patent of Addition to Application Number	:NA
Filing Date	:NA
(62) Divisional to Application Number	:NA
Filing Date	:NA

(71)**Name of Applicant :**
1)Curious Bee Innovations Private Limited
Address of Applicant :C-612, Brigade Gardenia, J P Nagar 7th Phase, Bangalore - 560078, Karnataka, India Karnataka India
(72)**Name of Inventor :**
1)Rohit Pentapati
2)Raviteja S K Manepalli
3)Sthita Pragyan Pujari
4)Priyanshu Sinha
5)Niharika Pentapati

(57) Abstract :
SYSTEM AND METHOD FOR AUTOMATED EVALUATION OF DESCRIPTIVE MULTIMODAL ANSWERS ABSTRACT A system for automated evaluation of descriptive multimodal answers is disclosed. The plurality of subsystems includes a multimodal answer capturing subsystem, configured to capture multimodal answers for corresponding plurality of stored multimodal questions from one or more users. The plurality of subsystems includes a multimodal answer analysis subsystem, configured to identify the facts existing in the captured multimodal answers from each of the one or more users, extract a region of interest of identified facts using artificial intelligence-based data mining technique and evaluate the captured multimodal answers by comparing each of the identified facts along with the extracted region of interest with the plurality of stored factual multimodal answers. The plurality of subsystems includes a feedback subsystem, configured to generate a conceptual mapping information based on compared facts and generate recommendations associated with the subject topic of the captured multimodal answers by using an artificial intelligence-based recommendation model. FIG. 1

No. of Pages : 26 No. of Claims : 12

(12) PATENT APPLICATION PUBLICATION
(21) Application No.202141031730 A
(19) INDIA
(22) Date of filing of Application :14/07/2021
(43) Publication Date : 16/07/2021

(54) Title of the invention : DEEP LEARNING BASED IRRIGATION MODEL FROM THE PLANT LEAVES PICTURES TO ENHANCE CROP PRODUCTION

(51) International classification	:A01G0025160000, G06K0009620000, G05B0013040000, A23L0003350800, G06Q0050020000
(31) Priority Document No	:NA
(32) Priority Date	:NA
(33) Name of priority country	:NA
(86) International Application No	:PCT//
Filing Date	:01/01/1900
(87) International Publication No	: NA
(61) Patent of Addition to Application Number	:NA
Filing Date	:NA
(62) Divisional to Application Number	:NA
Filing Date	:NA

(71)**Name of Applicant :**
1)Dr.Joshi.Vinayak.Bhalachandra
Address of Applicant :Professor and Dean, Belgaum-59009. Email id: vbjoshi009@gmail.com Mobile No: 9902078370 Karnataka India
2)Mr. PAGALLA BHAVANI SHANKAR, University College of Engineering & Technology, KRISHNA UNIVERSITY
3)Dr.Sidagouda Patil, VSM's BBA BCA and Degree College
4)Suneel C Shinde, KLE Society's KLE College of Engineering and Technology
5)Chidambar Joshi, VSM's BBA BCA and Degree College
6)Nitin Mugade, VSM's BBA BCA and Degree College
7)Dr Manjunath M
8)Prasanna M Kulkarni
9)Priyanka D, Saveetha School of Engineering
10)Dr.Markarand Upadhyaya, University of Bahrain
11)Dr.M.Thillainayaki, Nehru Arts and Science College
12)Sabarimuthu. M, Kongu Engineering College
13)Dr. Pavithra G, Dayananda Sagar College of Engg. (DSCE)
14)Dr. T.C.Manjunath, Dayananda Sagar College of Engg. (DSCE)
(72)**Name of Inventor :**
1)Dr.Joshi.Vinayak.Bhalachandra
2)Mr. PAGALLA BHAVANI SHANKAR, University College of Engineering & Technology, KRISHNA UNIVERSITY
3)Dr.Sidagouda Patil, VSM's BBA BCA and Degree College
4)Suneel C Shinde, KLE Society's KLE College of Engineering and Technology
5)Chidambar Joshi, VSM's BBA BCA and Degree College
6)Nitin Mugade, VSM's BBA BCA and Degree College
7)Dr Manjunath M
8)Prasanna M Kulkarni
9)Priyanka D, Saveetha School of Engineering
10)Dr.Markarand Upadhyaya, University of Bahrain
11)Dr.M.Thillainayaki, Nehru Arts and Science College
12)Sabarimuthu. M, Kongu Engineering College
13)Dr. Pavithra G, Dayananda Sagar College of Engg. (DSCE)
14)Dr. T.C.Manjunath, Dayananda Sagar College of Engg. (DSCE)

(57) Abstract :
Water is a limiting factor in arid zones and its optimal management is critical to guarantee proper production levels and the quality of crops. One of the techniques that has been deliberate and applied in recent years to reduce water consumption in agriculture is deficit irrigation, which requires measurable crop stress parameters. Midday stem water potential (SWP) is the reference method. The crop water stress index (CWSI) is one of the most widely used indicators correlated with SWP and it is remotely measurable. In order to obtain the CWSI, it is necessary to measure the crop canopy temperature. In this invention, the support vector machine (SVM) and deep learning techniques were applied to image-segmentation. This model was trained based on the several inputs such as encoder depth, optimizer, learning rate, weight decay, validation frequency and validation patience.

No. of Pages : 12 No. of Claims : 3

(12) PATENT APPLICATION PUBLICATION
(19) INDIA
(22) Date of filing of Application :14/07/2021

(21) Application No.202141031755 A
(43) Publication Date : 16/07/2021

(54) Title of the invention : A System and Method for E-Mail Feedback in a Trusted Network using Non-Deterministic Methods & Tools

(51) International classification	:H04L0029060000, H04L0012580000, H04L0009320000, H04L0029080000, H04L0001060000
(31) Priority Document No	:NA
(32) Priority Date	:NA
(33) Name of priority country	:NA
(86) International Application No	:PCT//
Filing Date	:01/01/1900
(87) International Publication No	: NA
(61) Patent of Addition to Application Number	:NA
Filing Date	:NA
(62) Divisional to Application Number	:NA
Filing Date	:NA

(71)**Name of Applicant :**
1)Dr.L.Thomas Robinson
Address of Applicant :Assistant Professor, Department of Computer Science, Nanjil Catholic College of Arts and Science, kaliyakkavilai, Kanyakumari, Tamil Nadu, India. Pin Code:629153 Tamil Nadu India
2)Dr.Maddu.Kamaraju
3)Mr.Pilla Mohan Ganesh
4)Dr.K.R.N. Kiran Kumar
5)Ms.PremaLatha Velagapalli
6)Dr.G.Vasavi
7)Dr.Sushma Jaiswal
8)Mr.Tarun Jaiswal
9)Dr.J.Manoranjini
10)Dr.Rabinarayan Satpathy
(72)**Name of Inventor :**
1)Dr.L.Thomas Robinson
2)Dr.Maddu.Kamaraju
3)Mr.Pilla Mohan Ganesh
4)Dr.K.R.N. Kiran Kumar
5)Ms.PremaLatha Velagapalli
6)Dr.G.Vasavi
7)Dr.Sushma Jaiswal
8)Mr.Tarun Jaiswal
9)Dr.J.Manoranjini
10)Dr.Rabinarayan Satpathy

(57) Abstract :
[030] The present invention discloses a system for E-mail feedback in a trusted network using Non-Deterministic methods and tools and method thereof. The system includes, but not limited to, a processing node with a user name configured to send authorized inbound messages to trusted networks; an authorized message having a trusted source encryption with the receiver feedback; a reporting status of the authorized message with processed feedback to process using Non-Deterministic methods and tools for processing the authorized message of the user. Further, the processing node with the user name is configured to generate non-deterministic data values corresponding to respective authorized message of the user. In addition, the non-deterministic data values are having multiple root hash values of a distributed hash tree infrastructure having as input the authorized message with a plurality of digital input records during a respective processing node transmission. Accompanied Drawing [FIG. 1]

No. of Pages : 21 No. of Claims : 10

(12) PATENT APPLICATION PUBLICATION
(21) Application No.202141031756 A
(19) INDIA
(22) Date of filing of Application :14/07/2021
(43) Publication Date : 16/07/2021

(54) Title of the invention : A SYSTEM FOR REDUCING PEAK-TO-AVERAGE POWER RATIO OF LARGE-SCALE MIMO AND METHOD THEREOF

(51) International classification	:H04L0027260000, H04B0007041300, H04B0007045600, H04B0007080000, H04N0019423000
(31) Priority Document No	:NA
(32) Priority Date	:NA
(33) Name of priority country	:NA
(86) International Application No	:PCT//
Filing Date	:01/01/1900
(87) International Publication No	: NA
(61) Patent of Addition to Application Number	:NA
Filing Date	:NA
(62) Divisional to Application Number	:NA
Filing Date	:NA

(71)**Name of Applicant :**
1)Mrs.S.Sugapriya
Address of Applicant :House No: 3/158K, 2nd Cross, Airforce Colony, Trichy Road, Kangeyampalayam, Coimbatore, Tamil Nadu, India. Pin Code:641401 Tamil Nadu India
2)Dr.K.Natarajan
3)Mrs.Steffina Muthukumar
4)Ms.K.Sundareswari
(72)**Name of Inventor :**
1)Mrs.S.Sugapriya
2)Dr.K.Natarajan
3)Mrs.Steffina Muthukumar
4)Ms.K.Sundareswari

(57) Abstract :
ABSTRACT A SYSTEM FOR REDUCING PEAK-TO-AVERAGE POWER RATIO OF LARGE-SCALE MIMO AND METHOD THEREOF [029] The present invention discloses a system for reducing peak-to-average power ratio of large-scale MIMO. The system includes, but not limited to, a processing unit for evaluating the expressing pre-coding constraint and OFDM modulation data jointly into a predefined equation set, and calculate the signal model of associating expressed pre-coding and OFDM modulation, and further, the processing unit by calculating the largest PAPR value calculate the signal model in each set and selecting a set with the minimum maximum for transmission. The present invention is to provide a low-complexity and low-latency system, method and apparatus, whereby the side information regarding PAPR reduction in the systems is consistently transmitted. Accompanied Drawing [FIG. 1]

No. of Pages : 20 No. of Claims : 9

(12) PATENT APPLICATION PUBLICATION
(19) INDIA
(22) Date of filing of Application :26/04/2021
(21) Application No.202144019044 A
(43) Publication Date : 16/07/2021

(54) Title of the invention : AUTOMATIC RAILWAY GATE CONTROL USING CLOUD-BASED SYSTEM TO ALERT THE PUBLIC

(51) International classification	:G06Q0010060000, H04W0040020000, E06B0003700000, B61L0005180000, B29C0033340000
(31) Priority Document No	:India
(32) Priority Date	:26/04/2021
(33) Name of priority country	:India
(86) International Application No	:NA
Filing Date	:NA
(87) International Publication No	: NA
(61) Patent of Addition to Application Number	:NA
Filing Date	:NA
(62) Divisional to Application Number	:NA
Filing Date	:NA

(71)**Name of Applicant :**
1)Lithin Kumble
Address of Applicant :Assistant Professor, School of Computing and Information Technology, REVA University, Bengaluru Karnataka India
2)Ravishankar H
(72)**Name of Inventor :**
1)Lithin Kumble
2)Ravishankar H
3)Dr.N.Thillaiarasu
4)Dr. Kiran Kumari Patil
5)Deepa K R
6)Shivaranjan

(57) Abstract :
Indian Railways is one of the methods of transport with a portion of 22% in the traveler transport. Under the Information Technology Vision 2012, declared in the Railway Budget for 2008-09 and 2009-10, the rail line service intends to give the Railways an advanced look and feel by carrying out Modern Communication frameworks like RFID, GPS, and Automation. Modernization of Indian Railways has consistently been an inquiry in concentration for the improvement of the fundamental framework of India. Since the rail lines address probably the best method of transport accessible to the average folks, it is difficult to simply continuing to build the charges to meet the expenses caused because of support, the huge labor force and the development exercises. The Railways ought to thusly, consider redesigning itself to front line advances for better effectiveness and cost decrease. A lobbing incorporates computerizing the railroad door activity and decreases the labor into most extreme degree. All in all, level intersection doors are worked physically by a guardian. At the point when the train begins to leave the station, the station in-control conveys this data to the nearest guard to prepare. In circumstances where the train gets postponed, the doors stay shut for long terms causing thick gridlock at the level intersections.

No. of Pages : 9 No. of Claims : 2

(12) PATENT APPLICATION PUBLICATION
(21) Application No.202031023869 A
(19) INDIA
(22) Date of filing of Application :08/06/2020
(43) Publication Date : 16/07/2021

(54) Title of the invention : SANDWICH PIPE FOR DEEP WATER APPLICATION

(51) International classification	:G06F0017500000, G06F0017110000, F16L0009147000, G06T0017000000, G21D0003000000	(71)**Name of Applicant :** **1)PATCHAMATLA SATYANARAYANA RAJU** Address of Applicant :GIET UNIVERSITY, GUNUPUR, ODISHA, INDIA, PIN 765 022 **2)ALLAKA GOPICHAND** **3)Dr.AVNL SHARMA**
(31) Priority Document No	:NA	
(32) Priority Date	:NA	(72)**Name of Inventor :**
(33) Name of priority country	:NA	**1)PATCHAMATLA SATYANARAYANA RAJU**
(86) International Application No	:NA	**2)ALLAKA GOPICHAND**
Filing Date	:NA	**3)Dr.AVNL SHARMA**
(87) International Publication No	: NA	
(61) Patent of Addition to Application Number	:NA	
Filing Date	:NA	
(62) Divisional to Application Number	:NA	
Filing Date	:NA	

(57) Abstract :
The application of sandwich pipes (1)related to water depth is beyond 1500 m is increased day by day.An efficient sandwich pipe design(5) is a complex problem in the current scenario. The design and optimization of sandwich pipe(1) is a very complex system. The proposed Taguchi method (7)will be used to for optimization of the design of the sandwich pipe(1) for deep water applications.Five design parameter(2) to be considered as input factors: Material of outer pipe, material of the inner pipe, core material, core height and thickness of the outer pipe. Taguchi analysis(8) will be applied to optimize the design parameters for the output(12) of technological characters. Technological output (12) considered are Vonmises stress, maximum shear stress ,deformation and heat flux. The optimization (8) process will be carried out based on orthogonal array. Modeling(5) and analysis(10) for Vonmises stress, shear stress and heat flux will be done using Catia ansys and Simulia softwares.The optimum combination(8) will be tested experimentally(9) and the results(12) will be compared with simulation.

No. of Pages : 15 No. of Claims : 9

(12) PATENT APPLICATION PUBLICATION
(19) INDIA
(22) Date of filing of Application :26/08/2020

(21) Application No.202031036838 A
(43) Publication Date : 16/07/2021

(54) Title of the invention : METHOD FOR PRODUCING CALLI FROM ANTHERS, AND IMPLEMENTATIONS THEREOF

(51) International classification	:G01N0033533000, H05B0031000000, B01J0020286000, C02F0003280000, B63C0007260000
(31) Priority Document No	:NA
(32) Priority Date	:NA
(33) Name of priority country	:NA
(86) International Application No	:NA
Filing Date	:NA
(87) International Publication No	: NA
(61) Patent of Addition to Application Number	:NA
Filing Date	:NA
(62) Divisional to Application Number	:NA
Filing Date	:NA

(71)**Name of Applicant :**
1)DIRECTOR ICAR, NATIONAL RICE RESEARCH INSTITUTE
Address of Applicant :ICAR-NRRI, CUTTACK, ODISHA 753 006, India
(72)**Name of Inventor :**
1)SAI, Cayalvizhi Balasubramania
2)CHIDAMBARANATHAN, Parameswaran
3)SAMANTARAY, Sanghamitra

(57) Abstract :
The present disclosure discloses a method for producing multiple calli from a single anther, said method comprises culturing anthers in an induction medium comprising at least one histone deacetylase inhibitor selected from the group consisting of trichostatin A, suberoylanilide hydroxamic acid, and sodium butyrate, and at least one hormone. Further, the present disclosure also discloses a method for obtaining a double haploid plant of rice.

No. of Pages : 56 No. of Claims : 12

(12) PATENT APPLICATION PUBLICATION
(19) INDIA
(22) Date of filing of Application :12/11/2020
(21) Application No.202038049471 A
(43) Publication Date : 16/07/2021

(54) Title of the invention : METHOD OF PERFORMING BUILD-UP WELDING TO A SINTER CAKE SUPPORT STAND

(51) International classification	:B23K0035300000, B23K0026342000, B23K0103180000, B23K0035020000, F04D0025060000
(31) Priority Document No	:NA
(32) Priority Date	:NA
(33) Name of priority country	:NA
(86) International Application No	:PCT/JP2012/007587
Filing Date	:27/11/2012
(87) International Publication No	:WO2014083587
(61) Patent of Addition to Application Number	:NA
Filing Date	:NA
(62) Divisional to Application Number	:1908/KOLNP/2015
Filed on	:17/06/2015

(71)**Name of Applicant :**
1)TOKUDEN CO., LTD.
Address of Applicant :2-2-27, SHOUWADORI, AMAGASAKI-SHI, HYOGO 6600881 JAPAN
2)NIPPON STEEL CORPORATION
(72)**Name of Inventor :**
1)YUKIYAMA, Makoto
2)FUJII, Hirokazu
3)HAMATANI, Hideki
4)SATO, Hiroyuki

(57) Abstract :
A method of performing build-up welding to a sinter cake support stand is disclosed. The method comprises the steps of performing build-up welding of weld metal to each one of both side surfaces of the thickness reduced portions formed on the side surfaces; performing build-up welding of weld metal along an outer periphery of the thickness reduced portion for each one of both side surfaces of the thickness reduced portions and performing build-up welding of weld metal to the whole circumference of an end surface of the stand raw material.

No. of Pages : 19 No. of Claims : 2

(12) PATENT APPLICATION PUBLICATION
(19) INDIA
(22) Date of filing of Application :07/06/2021
(21) Application No.202131025210 A
(43) Publication Date : 16/07/2021

(54) Title of the invention : METHOD OF MAKING GLASS BEAD EMBEDDED TACTILE GLASS PLATE AND GLASS PLATE THEREOF

(51) International classification	:C03B0019100000, C03C0023000000, C03C0003087000, C03B0017060000, C03C0027020000
(31) Priority Document No	:NA
(32) Priority Date	:NA
(33) Name of priority country	:NA
(86) International Application No	:NA
Filing Date	:NA
(87) International Publication No	: NA
(61) Patent of Addition to Application Number	:NA
Filing Date	:NA
(62) Divisional to Application Number	:NA
Filing Date	:NA

(71)**Name of Applicant :**
1)ACHARJEE, Nandalal
Address of Applicant :382/B, Anandamath, P.O. Ichapur-Nawabganj, Dist: North 24 Parganas
(72)**Name of Inventor :**
1)ACHARJEE, Nandalal

(57) Abstract :
A method for producing glass bead embedded glass plate comprising the steps of providing transparent molten glass with control of viscosity and temperature; collecting transparent molten glass through blow pipe and introducing light blow; mixing with glass beads of various pigments to the said collected molten glass; taking the mixed glass inside glory hole; heating the said mixed glass inside of a glory hole, where the said beads are dispersed or diffuse into the said transparent glass; taking another blow pipe and fitting the same to just opposite side of the first blow pipe and thereafter the first blow pipe is separated; applying continuous heat and rotational motion in order to form a plate structure; and cooling the obtained glass structure.

No. of Pages : 13 No. of Claims : 7

(12) PATENT APPLICATION PUBLICATION
(21) Application No.202131027969 A
(19) INDIA
(22) Date of filing of Application :22/06/2021
(43) Publication Date : 16/07/2021

(54) Title of the invention : AUTONOMOUS SEAM WELDING MACHINE

(51) International classification	:G03B0029000000, B23Q0035128000, B23K0009127000, A61B0001060000, B23K0011060000
(31) Priority Document No	:NA
(32) Priority Date	:NA
(33) Name of priority country	:NA
(86) International Application No	:NA
Filing Date	:NA
(87) International Publication No	: NA
(61) Patent of Addition to Application Number	:NA
Filing Date	:NA
(62) Divisional to Application Number	:NA
Filing Date	:NA

(71)**Name of Applicant :**
1)PANDEY, Dr. Anish
Address of Applicant :School of Mechanical Engineering, Campus-8 Kalinga Institute of Industrial Technology (KIIT) Deemed to be University, An Institute of Eminence, Bhubaneswar - 751024, Odisha, India
2)MISHRA, Dr. Ruby
3)KUMAR, Dr. Ashwani
4)DIWAN, Mr. Tarun Dhar
5)SINGH, Mr. Surjeet
(72)**Name of Inventor :**
1)PANDEY, Dr. Anish
2)MISHRA, Dr. Ruby
3)KUMAR, Dr. Ashwani
4)DIWAN, Mr. Tarun Dhar
5)SINGH, Mr. Surjeet
6)SINGH, Ms. Shikha
7)KASHYAP, Mr. Abhishek Kumar

(57) Abstract :
The present invention provides a seam welding machine (1000) which includes a machine frame (103), a mount (104), and a box (107). The machine (1000) further includes a light source (102) configured inside the box (107) in such a manner so as to create a shadow of a circumferential lap joint of a workpiece (101) by projecting a light. The machine (1000) further includes RGB camera (108) configured inside the box (107) to capture the images of the shadow. The box (107) includes an insulation layer, thereby protecting the light source (102) and the camera (108). The machine (1000) includes a microcontroller (112) which is operatively connected with the camera (108) and a welding torch (106). The microcontroller (112) is adapted to process the images in the RGB format for tracking a seam path of the workpiece (101), and control the movement of the torch (106) for performing welding automatically.

No. of Pages : 25 No. of Claims : 10

(12) PATENT APPLICATION PUBLICATION
(21) Application No.202131028295 A
(19) INDIA
(22) Date of filing of Application :24/06/2021
(43) Publication Date : 16/07/2021

(54) Title of the invention : SILICA EMBEDDED NICKEL-SILVER BIMETALLIC NANOCOMPOSITE AS SELECTIVE CATALYST FOR SODIUM BOROHYDRIDE INDUCED REDUCTION OF AROMATIC NITROARENES

(51) International classification	:B01J0035000000, B01J0037020000, C07D0413040000, C07D0498080000, B01J0031180000	(71)**Name of Applicant :**
(31) Priority Document No	:NA	**1)Mandal Amitava**
(32) Priority Date	:NA	Address of Applicant :Molecular Complexity Laboratory, Department of Chemistry, Raiganj University, Raiganj, Uttar Dinajpur
(33) Name of priority country	:NA	**2)Karmakar Ankana**
(86) International Application No	:NA	**3)Mandal Suraj**
Filing Date	:NA	**4)Chakraborty Susama**
(87) International Publication No	: NA	**5)Goswami Tamal**
(61) Patent of Addition to Application Number	:NA	(72)**Name of Inventor :**
Filing Date	:NA	**1)Mandal Amitava**
(62) Divisional to Application Number	:NA	**2)Karmakar Ankana**
Filing Date	:NA	**3)Mandal Suraj**
		4)Chakraborty Susama
		5)Goswami Tamal

(57) Abstract :
The present invention provides a silica embedded nickel-silver bimetallic nanocomposite catalyst useful for reduction of substituted nitro aryl compounds to substituted amino aryl compounds. Formula I Formula II The molar ratio of nickel and silver in bimetallic nanoparticles is 1:1 and weight ratio of silica matrix core to capped bimetallic nanoparticles is 1:1. The particle size of silica embedded nickel-silver bimetallic nanocomposite catalyst is in the range of 20 nm to 80 nm. The time required for conversion of substituted nitro aryl compounds to substituted amino aryl compounds is in the range of 25 - 40 minutes. The temperature required for conversion of substituted nitro aryl compounds to substituted amino aryl compounds is 25oC. The substituted nitro aryl compounds are converted to substituted amino aryl compounds under solvent free condition.

No. of Pages : 28 No. of Claims : 10

(12) PATENT APPLICATION PUBLICATION
(21) Application No.202131028330 A
(19) INDIA
(22) Date of filing of Application :24/06/2021
(43) Publication Date : 16/07/2021

(54) Title of the invention : METHOD OF VALORIZATION OF LIQUID AND SOLID WASTE MATERIALS TO ALTERNATIVE SUSTAINABLE FUEL

(51) International classification	:C10L0001020000, B09B0003000000, C10L0005360000, C10L0005440000, C08L0091000000	(71)**Name of Applicant :** **1)RAY, Dr. Srimanta** Address of Applicant :Assistant Professor and Head, Department of Chemical Engineering, National Institute of Technology Agartala; Barjala, Jirania, Tripura India
(31) Priority Document No	:NA	(72)**Name of Inventor :** **1)RAY, Dr. Srimanta** **2)DEY, Pritam**
(32) Priority Date	:NA	
(33) Name of priority country	:NA	
(86) International Application No	:NA	
Filing Date	:NA	
(87) International Publication No	: NA	
(61) Patent of Addition to Application Number	:NA	
Filing Date	:NA	
(62) Divisional to Application Number	:NA	
Filing Date	:NA	

(57) Abstract :
The present invention illustrates a strategy of valorizing a liquid waste generated in food manufactures, processing units, and outlets, namely waste vegetable oil, and a hazardous solid waste generated in hospitals and biomedical waste generation centers, namely incinerable single use polymeric solid waste. The incinerable single use polymeric solid waste is valorized through thermochemical conversion followed by distillation to fuel grade oil and subsequent blending. The liquid waste, waste vegetable oil, is valorized herein through direct blending. The blend of fuel grade oil with waste vegetable oil successfully defines a blend fuel composition with lower carbon content that can be used as a substitute of standard diesel in conventional compression ignition engines, commonly used for energy generation across power, agricultural and transportation sector. The blend fuel has lower adverse environmental impact and emissions, better economics, yet comparable performance and efficiencies compared to standard diesel.

No. of Pages : 39 No. of Claims : 11

(12) PATENT APPLICATION PUBLICATION
(21) Application No.202131028359 A
(19) INDIA
(22) Date of filing of Application :24/06/2021
(43) Publication Date : 16/07/2021

(54) Title of the invention : METHODS AND SYSTEMS FOR AGRICULTURAL WORK BY SMART AGRICULTURE FIELD BOUNDARY WITH AI & ICT

(51) International classification	:A01B0079000000, G06Q0050020000, A01B0069040000, G06T0005000000, A01D0041127000
(31) Priority Document No	:NA
(32) Priority Date	:NA
(33) Name of priority country	:NA
(86) International Application No	:NA
Filing Date	:NA
(87) International Publication No	: NA
(61) Patent of Addition to Application Number	:NA
Filing Date	:NA
(62) Divisional to Application Number	:NA
Filing Date	:NA

(71)**Name of Applicant :**
1)DR.SATYABRATA DASH
Address of Applicant :ASSOCIATE PROFESSOR, DEPARTMENT OF COMPUTER SCIENCE AND ENGINEERING,RAMACHANDRA COLLEGE OF ENGINEERING(RCE),NH-16 BYPASS ROAD,VATLURU(V),ELURU,534007,WEST GODAVARI DT.,A.P.,INDIA
2)DR.VADHRI SURYANARAYANA
3)DR.RABI NARAYAN SATHAPATHY
4)DR.JARABALA RANGA
5)MR.BARADA P.PANIGRAHY
6)DR.SUBASH CHANDRA NATH
7)DR.S.JAYA LAKSHMI
8)DR.SUJATA CHAKARVARTY
9)DR.HEMRAJ SAINI
10)DR.SUSANTA KUMAR ROUT
(72)**Name of Inventor :**
1)DR.SATYABRATA DASH
2)DR.RABI NARAYAN SATHAPATHY
3)DR.JARABALA RANGA
4)MR.BARADA P.PANIGRAHY
5)DR.SUBASH CHANDRA NATH
6)DR.VADHRI SURYANARAYANA
7)DR.S.JAYA LAKSHMI
8)DR.SUJATA CHAKARVARTY
9)DR.HEMRAJ SAINI
10)DR.SUSANTA KUMAR ROUT

(57) Abstract :
The present invention relates to monitoring, controlling and analyzing the today's farming environment through smart devices in the agriculture field without creating any harm to human being or animals and also it will not create any environmental pollution. More specifically it relates to the agriculture land safety using loT devices with cost efficient real time surveillance.

No. of Pages : 14 No. of Claims : 9

(12) PATENT APPLICATION PUBLICATION
(21) Application No.202131028764 A
(19) INDIA
(22) Date of filing of Application :26/06/2021
(43) Publication Date : 16/07/2021

(54) Title of the invention : IOT BASED FULL BODY SANITIZATION SYSTEM

(51) International classification	:H04L0029080000, A61L0002100000, H04W0004700000, A61L0002180000, H04W0084120000
(31) Priority Document No	:NA
(32) Priority Date	:NA
(33) Name of priority country	:NA
(86) International Application No	:NA
Filing Date	:NA
(87) International Publication No	: NA
(61) Patent of Addition to Application Number	:NA
Filing Date	:NA
(62) Divisional to Application Number	:NA
Filing Date	:NA

(71)**Name of Applicant :**
1)SAJAL SAHA
Address of Applicant :DEPARTMENT OF CSE, KAZIRANGA UNIVERSITY, JORHAT
2)PURNENDU BIKASH ACHARJEE
3)RATAN KUMAR SAHA
4)NIBIR GOSWAMI
5)RITUPON BURAGOHAIN
6)SURAJ GOSWAMI
7)MEGHNA BANIK
(72)**Name of Inventor :**
1)SAJAL SAHA
2)PURNENDU BIKASH ACHARJEE
3)RATAN KUMAR SAHA
4)NIBIR GOSWAMI
5)RITUPON BURAGOHAIN
6)SURAJ GOSWAMI
7)MEGHNA BANIK

(57) Abstract :
The present invention relates an IOT (internet of things) based sanitization system comprising a sanitizing platform (102); a sanitizer filled container (106) to be connected with the sanitizing platform (102); a hand sanitizer dispenser (200); a thermal scanner (400); a face mask dispensing device (300); at least one power source (120); and a control unit (108) having at least one IOT enabled microcontroller. The sanitizing platform (102) is carried in a mobile storage box (104) and assembled at an entry point of any public premises. The hand sanitizer dispenser (200), the thermal scanner (400) and the face mask dispensing device (300) are installed in a convenient place near the sanitizing platform (102) so that the visitors sanitize their hands, measure their body temperature, and take a face mask, if required. The microcontroller (108) is configured with at least one ultrasonic sensor (110) for calculating the sanitizer level in the container (106) by using a time difference between transmitting and receiving of ultrasonic sound waves emitted from the sensor (110) so that the sanitizer level is notified to a remote operator through a wireless communication network as per a predefined parameter.

No. of Pages : 27 No. of Claims : 10

(12) PATENT APPLICATION PUBLICATION
(21) Application No.202131028822 A
(19) INDIA
(22) Date of filing of Application :27/06/2021
(43) Publication Date : 16/07/2021

(54) Title of the invention : SOLAR ASSISTED IOT BASED AUTOMATIC VERTICAL MEDICINAL PLANT CULTIVATION OF CRITICALLY ENDANGERED PLANT NARDOSTACHYS JATAMANSI

(51) International classification	:H04L0029080000, A61K0036840000, A01G0022000000, A01G0025160000, A01G0007000000
(31) Priority Document No	:NA
(32) Priority Date	:NA
(33) Name of priority country	:NA
(86) International Application No	:NA
Filing Date	:NA
(87) International Publication No	: NA
(61) Patent of Addition to Application Number	:NA
Filing Date	:NA
(62) Divisional to Application Number	:NA
Filing Date	:NA

(71)**Name of Applicant :**
1)Dr Vaneet Kumar
Address of Applicant :Associate Professor, School of Natural Sciences, CT University, Ferozepur Road, Sidhwan Khurd - 142024
2)Dr. Sudeshna chakraborty
3)Dr. AMRITA
4)Archana Kumari Prasad
5)Dr. GOURI SANKAR MISHRA
6)Dr Sreekanth Kumar Mallineni
7)Dr. Priya Kapoor
8)Jyotsna
9)Dr Sanjeev Dahiya
10)Monica Sharma
11)Pijush Kanti Dutta Pramanik
12)Dr. Gaurav Kumar Ameta
13)Prof.Ramesh Chandra Panda
14)Dr P Karthigeyan
(72)**Name of Inventor :**
1)Dr Vaneet Kumar
2)Dr. Sudeshna chakraborty
3)Dr. AMRITA
4)Archana Kumari Prasad
5)Dr. GOURI SANKAR MISHRA
6)Dr Sreekanth Kumar Mallineni
7)Dr. Priya Kapoor
8)Jyotsna
9)Dr Sanjeev Dahiya
10)Monica Sharma
11)Pijush Kanti Dutta Pramanik
12)Dr. Gaurav Kumar Ameta
13)Prof.Ramesh Chandra Panda
14)Dr P Karthigeyan

(57) Abstract :
The current scenario, particularly the Covid-19 pandemic outbreak, has reawakened public interest in alternative medical systems. People have begun to use plant-based medications in far greater numbers than in the past. The demand for medicinal plant parts for direct use or the manufacture of various sorts of dosage forms by phyto pharmaceutical manufacturing enterprises has put enormous strain on forest resources around the world. The Himalayan region of India is a treasure trove for getting herbal remedies; however, there has been a lack of these plant sources due to ever-increasing demand and escalating overuse of natural habitats of these plants. To prevent the critically endangered Nardostachys Jatamansi from becoming extinct in Himalayas and to ensure its availability for future generations, we developed an IoT- based autonomous vertical cultivation approach. This approach would take up the least amount of land because it is built on a vertical slope, and it would include an automatic water irrigation system in the form of mist and drop sprinklers, as well as temperature and humidity sensors, to control these essential cultivation variables. For germination and greater seedling survival, Nardostachys Jatamansi demands moist, slightly sunny regions with sandy loam and acidic soil rich in organic carbon and nitrogen. Even though this plant's native occurrence ranges from 3000-5000 meters on the Himalayan Alpine slopes, cultivation of this plant would be possible at lower elevations with improved crop yields thanks to our innovation. Our unique IoT-based farming method would not only conserve critically endangered plants in the present, but it would also serve as a model for their regular supply for future patient benefits. Our innovation is an uncomplicated cloud-based IoT system based on the Arduino/ESP8266 and a remote MQTT broker. It uses the internet to connect to a remote MQTT broker. An Android mobile app is used to link to the broker, allowing to monitor and control irrigation pump set at all times, the set up utilizes DHT22 humidity and temperature sensors, light intensity sensor. ESP 8266 WIFI module is used for cloud communication.

No. of Pages : 12 No. of Claims : 6

(12) PATENT APPLICATION PUBLICATION
(21) Application No.202131028844 A
(19) INDIA
(22) Date of filing of Application :28/06/2021
(43) Publication Date : 16/07/2021

(54) Title of the invention : SMRITICON THE ENVIRONMENT CLEANER

(51) International classification	:C11D0003200000, C11D0017000000, A47L0009000000, A47L0009240000, C11D0003000000
(31) Priority Document No	:NA
(32) Priority Date	:NA
(33) Name of priority country	:NA
(86) International Application No	:NA
Filing Date	:NA
(87) International Publication No	: NA
(61) Patent of Addition to Application Number	:NA
Filing Date	:NA
(62) Divisional to Application Number	:NA
Filing Date	:NA

(71)**Name of Applicant :**
1)PRADIP KUMAR SAHA
Address of Applicant :231/C, SKYLINE MANOR, NSC BOSE ROAD, KOLKATA-700040
(72)**Name of Inventor :**
1)PRADIP KUMAR SAHA

(57) Abstract :
A magnetisms mechanisms system for environment for selectively curing followed by cleaning of a procedure. Magnetisms apply between magnets to magnets and magnets to coppers ring to do configuration by hydraulic jack for generating self made hotter air and generating self made motion power for cooking, transportation and logistics.

No. of Pages : 27 No. of Claims : 5

(12) PATENT APPLICATION PUBLICATION
(21) Application No.202131029019 A
(19) INDIA
(22) Date of filing of Application :29/06/2021
(43) Publication Date : 16/07/2021

(54) Title of the invention : NITINOL AS SENSOR AND ACTUATOR FOR ALERTING PURPOSE THROUGH IOT IN UNDERGROUND APPLICATIONS

(51) International classification	:G06Q0050100000, E21F0017180000, E21C0035240000, A62B0009000000, H04N0005262000	(71)**Name of Applicant :** **1)BISWAJIT KUMAR SWAIN** Address of Applicant :SUBHADRAPUR, CUTTACK, ODISHA-753011 **2)ARCHANA BALMIK** **3)HARSHIT SRIVASTAVA**
(31) Priority Document No	:NA	
(32) Priority Date	:NA	(72)**Name of Inventor :**
(33) Name of priority country	:NA	**1)BISWAJIT KUMAR SWAIN**
(86) International Application No	:NA	**2)ARCHANA BALMIK**
Filing Date	:NA	**3)HARSHIT SRIVASTAVA**
(87) International Publication No	: NA	
(61) Patent of Addition to Application Number	:NA	
Filing Date	:NA	
(62) Divisional to Application Number	:NA	
Filing Date	:NA	

(57) Abstract :
In the current invention, a monitoring and alerting system has been proposed to assist the risk management and rescue operation of an underground mine. The system comprises a NiTinol shape memory alloy as the temperature sensor by extracting its shape memory effect property, which can sense the threshold temperature and actuate to press the siren simultaneously. In conjunction with the above, the environmental sensors are also included in the proposed system to facilitate the end-users with the information of pollutant gas concentration. The above-mentioned information will be driven by an IoT based system to Android/iOS/Web platforms for immediate actions. The GPS attached to the current system will indicate the exact location which will guide the rescue operator to locate the specific mine.

No. of Pages : 18 No. of Claims : 14

(12) PATENT APPLICATION PUBLICATION
(21) Application No.202131029128 A
(19) INDIA
(22) Date of filing of Application :29/06/2021
(43) Publication Date : 16/07/2021

(54) Title of the invention : A SYSTEM AND METHOD FOR FACIAL RECOGNITION USING MICRO DRONE

(51) International classification	:G06K0009000000, B64C0039020000, G05D0001000000, B64D0047080000, G06K0009620000
(31) Priority Document No	:NA
(32) Priority Date	:NA
(33) Name of priority country	:NA
(86) International Application No	:NA
Filing Date	:NA
(87) International Publication No	: NA
(61) Patent of Addition to Application Number	:NA
Filing Date	:NA
(62) Divisional to Application Number	:NA
Filing Date	:NA

(71)**Name of Applicant :**
1)Dr. Preetisudha Meher
Address of Applicant :Assistant Professor, NIT Arunachal Pradesh,
2)Dr. V. Gokula Krishnan
3)Aswini Kumar Patra
4)Dr. Pinagadi Venkateswara Rao
5)Dr. Vijay Kumar Sharma
6)Lukram Dhanachandra Singh
7)Gayathri Parasa
8)Dr. Raja Varma Pamba
9)Mr.Yadav Rahul Shivaji
10)Mr. Prasanna Rajendra Kadam
(72)**Name of Inventor :**
1)Dr. Preetisudha Meher
2)Dr. V. Gokula Krishnan
3)Aswini Kumar Patra
4)Dr. Pinagadi Venkateswara Rao
5)Dr. Vijay Kumar Sharma
6)Lukram Dhanachandra Singh
7)Gayathri Parasa
8)Dr. Raja Varma Pamba
9)Mr.Yadav Rahul Shivaji
10)Mr. Prasanna Rajendra Kadam

(57) Abstract :
Aspects of present disclosure relate to a system (100) and method (200) for facial recognition using micro drone for efficient monitoring and surveillance of a locality for defense purposes. The micro unmanned aerial vehicle (102) disclosed in the present invention is capable of accessing and monitoring even congested and threat-prone area without drawing unwanted attention. The system (100) disclosed in the present invention includes, but not limited to, a micro unmanned aerial vehicle (102) and a computing node (104). The present invention also discloses a method (200) which includes, but is not limited to, steps such as acquiring (202) image data, applying face recognition techniques (206) and displaying (208) the processed image data. The operation of the micro unmanned aerial vehicle (102) and reception and transmission of data between the embodiments of the present invention are achieved remotely.

No. of Pages : 22 No. of Claims : 6

Publication After 18 Months:

The following Patent Applications have been published under Section 11A (3) of The Patents (Amendment) Act, 2005. Any Person may file representation by way of opposition to the Controller of Patents at the appropriate office against the grant of the patent in the prescribed manner under section 25(1) of the Patents (Amendment) Act, 2005 read with the rule 55 of The Patents (Amendment) Rules, 2006:

(12) PATENT APPLICATION PUBLICATION

(19) INDIA

(22) Date of filing of Application :21/05/2019

(21) Application No.201911020006 A

(43) Publication Date : 16/07/2021

(54) Title of the invention : PROCESS FOR MANUFACTURING SOFT CHEWABLE FREE FLOWING GRANULES AND COMPANION ANIMAL PRODUCTS THEREOF

(51) International classification	:A61K0009000000, A61K0009200000, A61K0009500000, A61K0031192000, A61K0009160000
(31) Priority Document No	:NA
(32) Priority Date	:NA
(33) Name of priority country	:NA
(86) International Application No	:NA
Filing Date	:NA
(87) International Publication No	: NA
(61) Patent of Addition to Application Number	:NA
Filing Date	:NA
(62) Divisional to Application Number	:NA
Filing Date	:NA

(71)**Name of Applicant :**
1)CUCKOS PHARMACEUTICAL PRIVATE LIMITED
Address of Applicant :PLOT NO. 132, SECTOR 16, HSIIDC, BAHADURGARH HARYANA-124857, INDIA Haryana India
(72)**Name of Inventor :**
1)VISHAL OHLAN
2)BHARAT BHUSHAN SANDUJA

(57) Abstract :
The present invention relates to soft chewable composition and its method of manufacturing using pharmaceutical conventional equipment. The present invention relates to process for manufacturing soft chewable dosage form by manufacturing free flowing soft chewable granules and these granules are compressed to make soft chewable tablets using rotary compression machine. The free-flowing granules of the invention are formed of active ingredients or nutritional agents, diluents, binder, disintegrant, sugar component, oil component or humectant or combination of both, flavour, lubricant or plasticizers in intragranular or extra granular and other conventional tableting aids to help in making the tablet more palatable.

No. of Pages : 36 No. of Claims : 17

(12) PATENT APPLICATION PUBLICATION
(21) Application No.201911027816 A
(19) INDIA
(22) Date of filing of Application :11/07/2019
(43) Publication Date : 16/07/2021

(54) Title of the invention : NOVEL GRANULES AND ITS PESTICIDAL COMPOSITIONS

(51) International classification	:A01N0053000000, A01N0043560000, A01N0043780000, C07D0231440000, A01N0025140000
(31) Priority Document No	:NA
(32) Priority Date	:NA
(33) Name of priority country	:NA
(86) International Application No	:NA
Filing Date	:NA
(87) International Publication No	: NA
(61) Patent of Addition to Application Number	:NA
Filing Date	:NA
(62) Divisional to Application Number	:NA
Filing Date	:NA

(71)**Name of Applicant :**
1)INSECTICIDES (INDIA) LIMITED
Address of Applicant :401-402, Lusa Tower, Azadpur Commercial Complex, Delhi - 110033, India Delhi India
(72)**Name of Inventor :**
1)Dr. L.C. Rohela
2)Rajesh Aggarwal

(57) Abstract :
The present invention provides a zeolite based granular pesticidal composition which is capable of efficiently retaining various pesticides and also capable of moderately releasing said pesticides after mixing with soil to be treated.

No. of Pages : 15 No. of Claims : 3

(12) PATENT APPLICATION PUBLICATION
(21) Application No.201911047685 A
(19) INDIA
(22) Date of filing of Application :22/11/2019
(43) Publication Date : 16/07/2021

(54) Title of the invention : JUVENILE HORMONE MIMICS FOR SILKMOTH (BOMBYX MORI) : GREEN APPROACH TO ENHANCE SILK PRODUCTION

(51) International classification	:C07K0014435000, A61K0036605000, C07K0014720000, C12N0009180000, A01N0049000000
(31) Priority Document No	:NA
(32) Priority Date	:NA
(33) Name of priority country	:NA
(86) International Application No	:NA
Filing Date	:NA
(87) International Publication No	: NA
(61) Patent of Addition to Application Number	:NA
Filing Date	:NA
(62) Divisional to Application Number	:NA
Filing Date	:NA

(71)**Name of Applicant :**
1)DR. PAMITA AWASTHI
Address of Applicant :DEPARTMENT OF CHEMISTRY, NATIONAL INSTITUTE OF TECHNOLOGY, HAMIRPUR, HIMACHAL PRADESH-177005, INDIA Himachal Pradesh India
2)VANDNA DEVI
(72)**Name of Inventor :**
1)DR. PAMITA AWASTHI
2)VANDNA DEVI

(57) Abstract :
Oxybenzene derivatives act as juvenile hormone active compounds, insect growth regulators (IGRs), by mimicking the action of natural juvenile hormone (JH). Major application of this class of molecules is to control insect population. However, time of applications and limited dose of IGR™s are commercially used on silk moth in enhancing silk production. The JH activity of synthesized compound is highly affected by diversification in the attachment of functionalities over the ring as well as in the parent chain of molecules. In present invention we have incorporated amide, ester functional groups along with some additional features like toluene, indole rings etc. to design compounds with JH activity. The parent compound has been shown below. Where R1 is independent -H, -CH3, Cl groups which lead to formation of substituted oxybenzene and use of naphthol in place of phenol results in oxynaphthalene derivatives. R2 is C6H5, C8H6N groups as substituents. In the present study, synthesized JH mimics have been studied to enhancing silk production.

No. of Pages : 30 No. of Claims : 11

(12) PATENT APPLICATION PUBLICATION
(19) INDIA
(22) Date of filing of Application :09/01/2020
(21) Application No.202011000918 A
(43) Publication Date : 16/07/2021

(54) Title of the invention : A METHOD OF TRANSFERRING LASER-INDUCED GRAPHENE (LIG) FROM A POLYIMIDE SHEET

(51) International classification	:H01L0051000000, B82Y0040000000, H01M0004620000, C01B0032186000, C01B0032194000
(31) Priority Document No	:NA
(32) Priority Date	:NA
(33) Name of priority country	:NA
(86) International Application No	:NA
Filing Date	:NA
(87) International Publication No	: NA
(61) Patent of Addition to Application Number	:NA
Filing Date	:NA
(62) Divisional to Application Number	:NA
Filing Date	:NA

(71)**Name of Applicant :**
1)BIRLA INSTITUTE OF TECHNOLOGY & SCIENCE (BITS), PILANI
Address of Applicant :Birla Institute of Technology & Science (BITS), Pilani, Pilani Campus, Vidya Vihar Pilani, Jhunjunu District, Rajasthan 333031, India. Rajasthan India
(72)**Name of Inventor :**
1)Goel, Sanket
2)Kothuru, Avinash

(57) Abstract :
The invention relates to a method of transferring laser-induced graphene (LIG) from a polyimide sheet to a flexible transparent plastic lamination film to enable re-use of the polyimide sheet. The method finds applications in the field of electronics in general, and flexible electronics in particular.

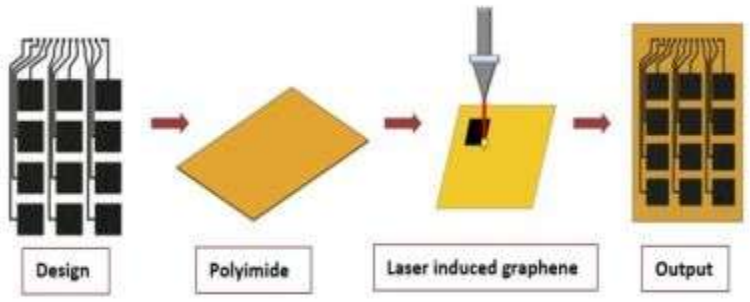

Fig. 1

No. of Pages : 12 No. of Claims : 5

(12) PATENT APPLICATION PUBLICATION
(21) Application No.202011000959 A
(19) INDIA
(22) Date of filing of Application :09/01/2020
(43) Publication Date : 16/07/2021

(54) Title of the invention : AN EFFICIENT METHOD FOR SPAWN PRODUCTION OF OYSTER MUSHROOM

(51) International classification	:A01G0018000000, C12N0001140000, C05F0011080000, H01L0021677000, B09B0003000000	(71)**Name of Applicant :** **1)G.B. PANT UNIVERSITY OF AGRICULTURE & TECHNOLOGY, PANTNAGAR** Address of Applicant :PANTNAGAR UTTARAKHAND-263145, INDIA Uttarakhand India
(31) Priority Document No	:NA	(72)**Name of Inventor :**
(32) Priority Date	:NA	**1)RAHUL PUROHIT**
(33) Name of priority country	:NA	**2)S.K. MISHRA**
(86) International Application No	:NA	
Filing Date	:NA	
(87) International Publication No	: NA	
(61) Patent of Addition to Application Number	:NA	
Filing Date	:NA	
(62) Divisional to Application Number	:NA	
Filing Date	:NA	

(57) Abstract :
A process has been developed with the objective to collect the basidiospores of Pleurotus sajor-caju without any contamination along with its easy handling i.e. no need to scratch the spore from the spore receiving surface. In this process sterilized small circular paper discs (5 mm size) were taken as basic units and were utilized for collection of spores in the form of spore printed circular paper. These spore printed circular paper discs can utilize as direct transfer of spore to the culturing media. The spore printed paper discs was further used to developed a process of preparation of commercial spawn within short period of time along with low contamination rate.

No. of Pages : 15 No. of Claims : 8

(12) PATENT APPLICATION PUBLICATION
(21) Application No.202011000986 A
(19) INDIA
(22) Date of filing of Application :09/01/2020
(43) Publication Date : 16/07/2021

(54) Title of the invention : A PROCESS FOR THE PREPARATION OF ALKYL-1, 3-DIHYDROXYNAPHTHOATE COMPOUNDS AND USE THEREOF

(51) International classification	:A23L0033100000, C08F0222100000, A23L0002520000, C07C0067307000, C07C0315040000	(71)**Name of Applicant :** **1)COUNCIL OF SCIENTIFIC AND INDUSTRIAL RESEARCH** Address of Applicant :ANUSANDHAN BHAWAN, 2 RAFI MARG NEW DELHI DELHI-110001, INDIA Delhi India
(31) Priority Document No	:NA	(72)**Name of Inventor :** **1)MURUGAN MUTHUKRISHNAN** **2)GANESH SUKHADEV GHOTEKAR**
(32) Priority Date	:NA	
(33) Name of priority country	:NA	
(86) International Application No	:NA	
Filing Date	:NA	
(87) International Publication No	: NA	
(61) Patent of Addition to Application Number	:NA	
Filing Date	:NA	
(62) Divisional to Application Number	:NA	
Filing Date	:NA	

(57) Abstract :
The present invention relates to a one pot, single step process for the preparation of alkyl 1,3-dihydroxynaphthoate compounds of formula (I) by using aryne precursor.

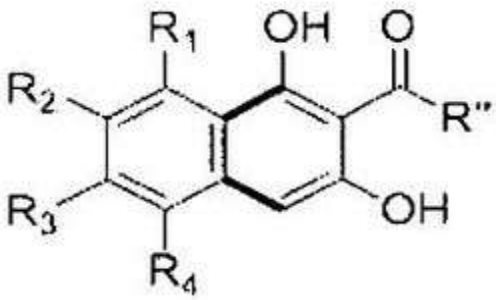

Formula (I)

No. of Pages : 29 No. of Claims : 10

(12) PATENT APPLICATION PUBLICATION
(21) Application No.202011001005 A
(19) INDIA
(22) Date of filing of Application :09/01/2020
(43) Publication Date : 16/07/2021

(54) Title of the invention : PROCESS TO EXTRACT, COLLECT RICE AROMA AND FLAVOR AND PREPARATION OF FLAVORED FOOD

(51) International classification	:A23L0007196000, A23L0027000000, A23L0027200000, A23L0027240000, A23L0007143000	(71)**Name of Applicant :** **1)AMITY UNIVERSITY** Address of Applicant :AMITY UNIVERSITY CAMPUS, SECTOR-125 NOIDA UTTAR PRADESH-201313, INDIA Uttar Pradesh India
(31) Priority Document No	:NA	(72)**Name of Inventor :**
(32) Priority Date	:NA	**1)DEVI DATT JOSHI**
(33) Name of priority country	:NA	**2)RAJNI SINGH**
(86) International Application No	:NA	**3)HARSHA KHARKWAL**
Filing Date	:NA	**4)NEERUPMA DHUMAN**
(87) International Publication No	: NA	
(61) Patent of Addition to Application Number	:NA	
Filing Date	:NA	
(62) Divisional to Application Number	:NA	
Filing Date	:NA	

(57) Abstract :
The present invention relates to a process for extracting, cpllecting the particulates of aroma and flavors from rice grains for the real feeling of rice in diet. Rice grains are mixed with distilled water in a RB flask, andjheated. The aroma rich water vapours are condensed using 1-1.5°C temperature of the condenser, and collected in the receiving flask. It is extracted with dichloromethane, and dichloromethane is distilled under vacuum. A dried soft-mass of particulates of aroma and flavors of rice grains obtain. These particulate are used to fortify other non-aromatic food for real time feeling of rice, and mask the flavor of routine diets also;

No. of Pages : 14 No. of Claims : 1

(12) PATENT APPLICATION PUBLICATION
(19) INDIA
(22) Date of filing of Application :09/01/2020

(21) Application No.202011001031 A
(43) Publication Date : 16/07/2021

(54) Title of the invention : A METHOD FOR DETECTING UN-AUTHORIZED OPENING OF COVER OF A TRACTION BATTERY PACK AND CIRCUIT THEREOF

(51) International classification	:H01M0002100000, H01H0009100000, G01R0031020000, G01R0027020000, H02J0007000000	(71)**Name of Applicant :** **1)MARUTI SUZUKI INDIA LIMITED** Address of Applicant :1 Nelson Mandela Road, Vasant Kunj, New Delhi-110070, India. Delhi India
(31) Priority Document No	:NA	(72)**Name of Inventor :**
(32) Priority Date	:NA	**1)ABHILASH CHOUDHARY**
(33) Name of priority country	:NA	**2)SHASHANK SHARMA**
(86) International Application No	:NA	**3)DR. PRASHANT TULI**
Filing Date	:NA	
(87) International Publication No	: NA	
(61) Patent of Addition to Application Number	:NA	
Filing Date	:NA	
(62) Divisional to Application Number	:NA	
Filing Date	:NA	

(57) Abstract :
The present disclosure relates to a traction battery pack (300) detecting an event of un-authorized opening of cover. The traction battery pack (3100) comprises a BMS (100) coupled with a cover open detection circuit (200). The cover open detection circuit (200) comprising a power source (201), a latchable switch (SI) (202), a first resistor (203), a second resistor (204), and a cover switch (S2) (205) are connected in series with the latchable switch (SI) (202). A switch (S3) (207) connected in parallel with the second resistor (204) where one end of the switch (S3) (207) is connected with the latchable switch (SI) (202). Further a fuse (206) provided in between the ground connection (208) and a terminal (209) joining one end of the second resistor (204) and other end of the switch (S3) (207) to provide path towards ground when the cover switch (S2) (205) is opened.

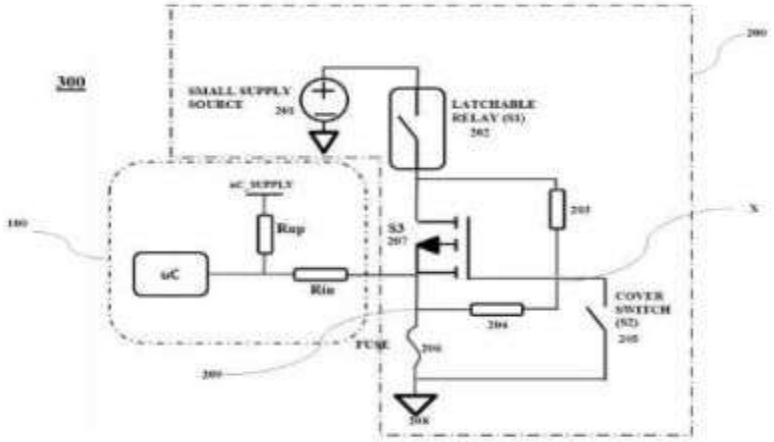

No. of Pages : 23 No. of Claims : 13

(12) PATENT APPLICATION PUBLICATION
(19) INDIA
(22) Date of filing of Application :09/01/2020

(21) Application No.202011001052 A
(43) Publication Date : 16/07/2021

(54) Title of the invention : INDOLYL OXOACETAMIDE ANALOGUES AS POTENT PANCREATIC LIPASE INHIBITORS.

(51) International classification	:C07D0417120000, C07D0401140000, C07D0471040000, C07D0405120000, A23L0003352600
(31) Priority Document No	:NA
(32) Priority Date	:NA
(33) Name of priority country	:NA
(86) International Application No	:NA
Filing Date	:NA
(87) International Publication No	: NA
(61) Patent of Addition to Application Number	:NA
Filing Date	:NA
(62) Divisional to Application Number	:NA
Filing Date	:NA

(71)**Name of Applicant :**
1)BIRLA INSTITUTE OF TECHNOLOGY & SCIENCE (BITS), PILANI
Address of Applicant :Birla Institute of Technology & Science (BITS), Pilani, Pilani Campus, Vidya Vihar Pilani, Jhunjunu District, Rajasthan 333031, India. Rajasthan India
(72)**Name of Inventor :**
1)Paul Atish Tulshiram
2)S N C Sridhar
3)Sengupta Pracheta
4)George Ginson

(57) Abstract :
The present invention relates the synthesis and biological evaluation of indolyl oxoacetamide analogues of formula (I) as potent PL inhibitors and also to method of preparation of these analogues.

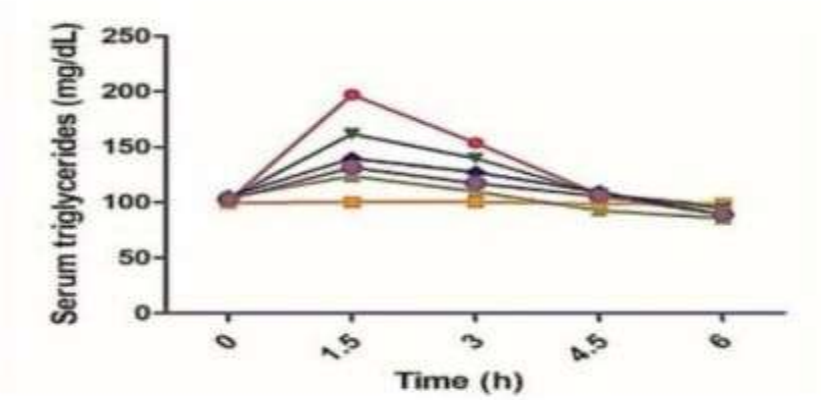

No. of Pages : 26 No. of Claims : 8

(12) PATENT APPLICATION PUBLICATION
(19) INDIA
(22) Date of filing of Application :10/01/2020

(21) Application No.202011001162 A
(43) Publication Date : 16/07/2021

(54) Title of the invention : AN IMPROVED CURTAIN EYELET APPARATUS AND METHOD THEREOF

(51) International classification	:B05C0005000000, E06B0009420000, E06B0009326000, E06B0009780000, C40B0060140000	(71)**Name of Applicant :** **1)Jayanita Exports Pvt. Ltd.** Address of Applicant :Plot No. 2, Sector 40, Greater Noida, Uttar Pradesh-201306, India Uttar Pradesh India (72)**Name of Inventor :** **1)Raveen Jain**
(31) Priority Document No	:NA	
(32) Priority Date	:NA	
(33) Name of priority country	:NA	
(86) International Application No	:NA	
Filing Date	:NA	
(87) International Publication No	: NA	
(61) Patent of Addition to Application Number	:NA	
Filing Date	:NA	
(62) Divisional to Application Number	:NA	
Filing Date	:NA	

(57) Abstract :
The present invention is about curtain eyelet apparatus (1) and method thereof includes grommet supporting ring (2) having plurality of holes (3) are of same size for mutual engagement with grommet. A bead chain jointer (5) is at the lower end of the grommet support ring (2) to tie the curtain together or maintain the pleats of the curtain. Said bead chain jointer (5) having one jointer hole (6) of circular shape to receive bead chain (7). Further eyelet apparatus (1) made of plastic. Said method having curtain eyelet apparatus (1) and bead chain (7) including a bead chain jointer (5) is at the lower end of the grommet support ring (2) having one bead chain jointer hole (6) has a circular shape to receive a bead chain (7) thereby performing a spacing function or maintain the pleats of the curtain. The present invention provides one pull solution to maintain pleats of the curtain and also having easy maintenance.

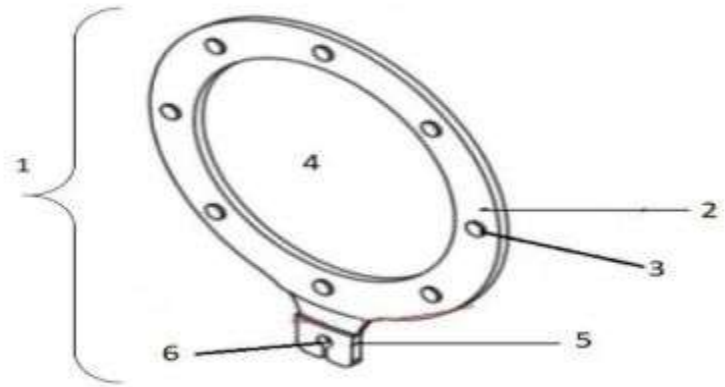

Figure 1

No. of Pages : 16 No. of Claims : 8

(12) PATENT APPLICATION PUBLICATION
(19) INDIA
(22) Date of filing of Application :10/01/2020

(21) Application No.202011001164 A
(43) Publication Date : 16/07/2021

(54) Title of the invention : ENDOGRIP

(51) International classification	:A61B0017000000, A61B0017122000, A61B0018140000, A61B0017040000, A61B0017120000	(71)**Name of Applicant :** **1)MAHAJAN, NITIN** Address of Applicant :N-118, GREATER KAILASH PART-1 NEW DELHI-110048, INDIA Delhi India
(31) Priority Document No	:NA	(72)**Name of Inventor :** **1)MAHAJAN, NITIN**
(32) Priority Date	:NA	
(33) Name of priority country	:NA	
(86) International Application No	:NA	
Filing Date	:NA	
(87) International Publication No	: NA	
(61) Patent of Addition to Application Number	:NA	
Filing Date	:NA	
(62) Divisional to Application Number	:NA	
Filing Date	:NA	

(57) Abstract :
EndoGrip is a tissue approximation device, complete with the delivery device system. It works under endoscopic guidance for closing the ulcers/fistula/perforation or polyp resection. In addition this can also be used for homeostasis of mucosal or submucosal defects, arteries, diverticula in colon. It consists of a clip made from a super memory alloy, Nitinol, which is radiopaque and changes its shape from the loaded cylindrical shape in the clip holder to. a single plane, with an immediate jerk, taking rio time to penetrate and compress the tissue folds circumferentially.

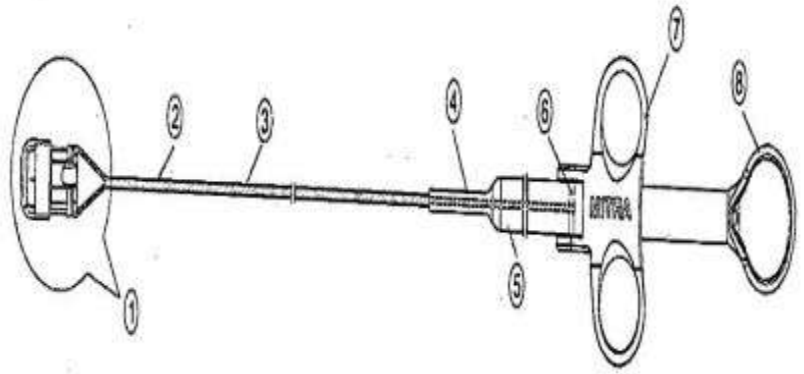

No. of Pages : 16 No. of Claims : 16

(12) PATENT APPLICATION PUBLICATION
(21) Application No.202011001179 A
(19) INDIA
(22) Date of filing of Application :10/01/2020
(43) Publication Date : 16/07/2021

(54) Title of the invention : A METHOD OF SYNTHESIS OF YTTRIUM IRON GARNET (YIG) NANO-MATERIALS AS SOURCE OF CLEAN AND GREEN ENERGY

(51) International classification	:H01P0001218000, H01F0001340000, G02F0001133500, H01F0010240000, G06Q0050060000	(71)**Name of Applicant :** **1)AMITY UNIVERSITY** Address of Applicant :AMITY UNIVERSITY CAMPUS, SECTOR-125 NOIDA UTTAR PRADESH-201313, INDIA Uttar Pradesh India
(31) Priority Document No	:NA	(72)**Name of Inventor :**
(32) Priority Date	:NA	**1)ATUL THAKUR**
(33) Name of priority country	:NA	**2)PREETI THAKUR**
(86) International Application No	:NA	**3)PRITAM BABU**
Filing Date	:NA	
(87) International Publication No	: NA	
(61) Patent of Addition to Application Number	:NA	
Filing Date	:NA	
(62) Divisional to Application Number	:NA	
Filing Date	:NA	

(57) Abstract :
ABSTRACT A METHOD OF SYNTHESIS OF YTTRIUM IRON GARNET (YIG) NANO-MATERIALS AS SOURCE OF CLEAN AND GREEN ENERGY The present invention relates to the method of synthesis of Yttrium Iron Garnet (YIG) nano-materials as source of clean and green energy. Yttrium Iron Garnet is prepared by citrate gel technique. Chemicals were taken as Yttrium nitrate with M.W 365 g/mol and hydrated Iron nitrate with M.W. 404 g/mol were taken as starting materials. Calculations were made for 25 g of YIG that amounts Yttrium nitrate as 8.788 g and iron nitrate 16.212 g. 3 gm citric acid was used as chelating agent. 100 ml of double distilled water was taken, heated at 90C and with constant stirring of 5000 rpm these chemical were dissolved. The water is slowly evaporated and brown colored gel is formed that ultimately burns, leaving behind fine nanoparticles of YIG. Then Powder is presintered at 700 0C for 3 h in box type furnace and pressed in pallet of size 1 inch in diameter and 2 mm in

No. of Pages : 14 No. of Claims : 2

(12) PATENT APPLICATION PUBLICATION
(21) Application No.202011001182 A
(19) INDIA
(22) Date of filing of Application :10/01/2020
(43) Publication Date : 16/07/2021

(54) Title of the invention : A NOVEL FORMULATION FOR THE TREATMENT AFTER AN INDUCTION OF PARKINSON DISEASE VIA MULTI LOW DOSE OF ROTENONE

(51) International classification	:A61K0009000000, A61K0009480000, A61K0009080000, C07D0493140000, G16H0015000000
(31) Priority Document No	:NA
(32) Priority Date	:NA
(33) Name of priority country	:NA
(86) International Application No	:NA
Filing Date	:NA
(87) International Publication No	: NA
(61) Patent of Addition to Application Number	:NA
Filing Date	:NA
(62) Divisional to Application Number	:NA
Filing Date	:NA

(71)**Name of Applicant :**
1)AMITY UNIVERSITY
Address of Applicant :AMITY UNIVERSITY CAMPUS, SECTOR-125 NOIDA UTTAR PRADESH-201313, INDIA Uttar Pradesh India
(72)**Name of Inventor :**
1)DEEPSHIKHA PANDE KATARE
2)NITU DOGRA
3)DHEERAJ NAGPAL

(57) Abstract :
ABSTRACT A NOVEL FORMULATION FOR THE TREATMENT AFTER AN INDUCTION OF PARKINSON DISEASE VIA MULTI LOW DOSE OF ROTENONE The present invention relates to the novel formulations for the treatment after an induction of PD via multi low dose of rotenone. The invention provides wistar rat model of rotenone induced PD and its treatment with Muccuna pruriens entrapped in nanocarriers. Drug-loaded nanocarriers have been formulated and used for the treatment of PD in animal model which enable the drug to cross the blood brain barrier. As it is a non- curable disease so to understand its pathology, drug loaded nanocarriers for its treatment as they can cross the blood brain barrier. It is a 120 days model with repeated low dose of Rotenone at an interval of 14 days. This model imitates the similar clinical pathophysiology of PD i.e. bradykinesia stage as in human and can be used for drug discovery. It is a chronic multi-low dose neurotoxin animal model of PD with zero percent mortality. Accompanied drawings [FIG. 1 & 2]

No. of Pages : 27 No. of Claims : 6

(12) PATENT APPLICATION PUBLICATION
(21) Application No.202011001189 A
(19) INDIA
(22) Date of filing of Application :10/01/2020
(43) Publication Date : 16/07/2021

(54) Title of the invention :A HYDROGEL BASED ABRASIVE MEDIA FOR ABRASIVE FLOW MACHINING AND PROCESS OF PREPARATION THEREOF"

(51) International classification	:B24B0031116000, B24C0003320000, B24B0031000000, B24C0011000000, B24C0007000000	(71)**Name of Applicant :** **1)INDIAN INSTITUTE OF TECHNOLOGY, ROORKEE** Address of Applicant :ROORKEE UTTARAKHAND-247667, INDIA Uttarakhand India (72)**Name of Inventor :** **1)DR. VARUN SHARMA** **2)DR. PRADEEP KUMAR** **3)MR. NITIN DIXIT**
(31) Priority Document No	:NA	
(32) Priority Date	:NA	
(33) Name of priority country	:NA	
(86) International Application No	:NA	
Filing Date	:NA	
(87) International Publication No	: NA	
(61) Patent of Addition to Application Number	:NA	
Filing Date	:NA	
(62) Divisional to Application Number	:NA	
Filing Date	:NA	

(57) Abstract :
Present invention provides low cost, biodegradable, hydrogel based abrasive media for abrasive flow machining and method of preparation. The media consists of xanthan gum, Locust Bean Gum (LBG), filmed silica, water, and SiC abrasives. The media is deformable so can be used as abrasive media in Abrasive Flow Machining (AFM). The preparation of developed media does not involve any heating of polymer. Initially there is weight loss due to dehydration but media does not lose its finishing capability. The viscosity curve for this composition is shown in Figure 1.

No. of Pages : 23 No. of Claims : 3

(12) PATENT APPLICATION PUBLICATION
(19) INDIA
(22) Date of filing of Application :10/01/2020
(21) Application No.202011001191 A
(43) Publication Date : 16/07/2021

(54) Title of the invention :A CASTABLE WINGED ABUTMENT"

(51) International classification	:A61M0025060000, A61K0036370000, A61C0008000000, C04B0035660000, E04F0013080000	(71)**Name of Applicant :** **1)DR. SUKHJIT KAUR** Address of Applicant :183, BLOCK-B RANJEET AVENUE AMRITSAR PUNJAB-143001, INDIA Punjab India
(31) Priority Document No	:NA	(72)**Name of Inventor :** **1)DR. SUKHJIT KAUR**
(32) Priority Date	:NA	
(33) Name of priority country	:NA	
(86) International Application No	:NA	
Filing Date	:NA	
(87) International Publication No	: NA	
(61) Patent of Addition to Application Number	:NA	
Filing Date	:NA	
(62) Divisional to Application Number	:NA	
Filing Date	:NA	

(57) Abstract :
The present invention relates to the system· and method for castable winged abutment. The castable winged abutment for direct attachment to the magnets 6 for retention of. the prosthesi/ comprises implant-abutment connection 1, the cylindrical portion of abutment 2 provides required length to the abutment so as to traverse the tickness of soft tissue. Winged portion 3 of the abutment provides surface for .attachment of magnets 6 and prosthetic screw 4 for retaining the abutment in the implant. The abutment is modified in height and shape using pattern resin which is mixed with methylinethacrylate monomer and shaped using a carver and after modifying the height, the pattern resin is added on the top-most part of the abutment to make two horizontal wings on the sides (outer diameter 5) of aperture of the cylinder

No. of Pages : 9 No. of Claims : 3

(12) PATENT APPLICATION PUBLICATION
(19) INDIA
(22) Date of filing of Application :10/01/2020

(21) Application No.202011001199 A
(43) Publication Date : 16/07/2021

(54) Title of the invention : TRANSPORT DEVICE FOR MEDICAL CONTAINERS

(51) International classification	:A61M0005000000, B65B0005060000, G09F0003100000, B01L0009060000, B32B0007020000	(71)**Name of Applicant :** **1)Schott Schweiz AG** Address of Applicant :St. Josefen Strasse 20, 9001 St. Gallen (CH) Switzerland **2)Schott Kaisha Pvt. Ltd.**
(31) Priority Document No	:NA	(72)**Name of Inventor :**
(32) Priority Date	:NA	**1)KLOKE, Arne**
(33) Name of priority country	:NA	**2)SAHNER, Nicole**
(86) International Application No	:NA	**3)NARVEKAR, Anil Narayan**
Filing Date	:NA	**4)POTDAR, Pratul Prakash**
(87) International Publication No	: NA	
(61) Patent of Addition to Application Number	:NA	
Filing Date	:NA	
(62) Divisional to Application Number	:NA	
Filing Date	:NA	

(57) Abstract :
The invention concerns a transport device for medical containers, comprising a carrier plate which has a plurality of openings for receiving the medical containers, and optionally a trough-shaped container which is formed such that the carrier plate can be inserted in the trough-shaped container; wherein the carrier plate contains a polymer and 7.5 to 50 wt.-% inorganic particles, wherein the trough-shaped container contains a polymer and optionally 7.5 to 50 wt.-% inorganic particles.

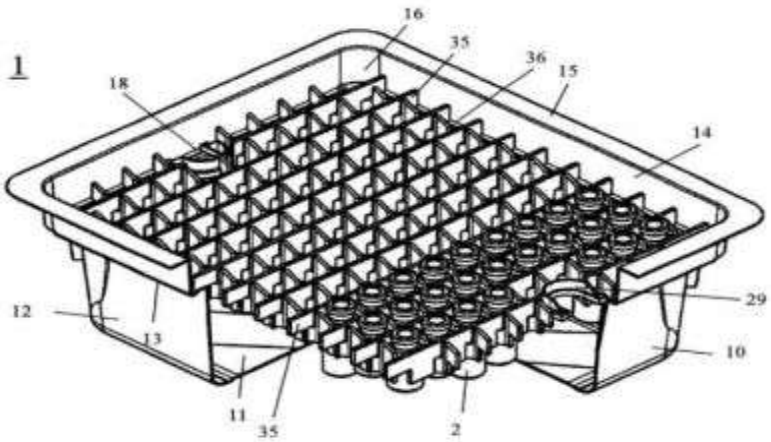

No. of Pages : 20 No. of Claims : 15

(12) PATENT APPLICATION PUBLICATION
(19) INDIA
(22) Date of filing of Application :10/01/2020

(21) Application No.202011001246 A
(43) Publication Date : 16/07/2021

(54) Title of the invention : A SYSTEM AND METHOD FOR ELECTRIC GENERATION

(51) International classification	:G06F0003140000, H02K0007180000, H04W0084180000, C25B0001040000, G01S0013560000
(31) Priority Document No	:NA
(32) Priority Date	:NA
(33) Name of priority country	:NA
(86) International Application No	:NA
Filing Date	:NA
(87) International Publication No	: NA
(61) Patent of Addition to Application Number	:NA
Filing Date	:NA
(62) Divisional to Application Number	:NA
Filing Date	:NA

(71)**Name of Applicant :**
1)GL Bajaj Institute of Technology and Management
Address of Applicant :Plot No. 2, Knowledge Park III, Greater Noida Uttar Pradesh India
(72)**Name of Inventor :**
1)SRIVASTAVA, Dr. Ashish Kumar
2)KUMAR, Nilesh
3)MANI, Prakash
4)GUPTA, Nikhil

(57) Abstract :
Disclosed herein a system for electric generation comprises, a plurality of moving objects having at least one magnet mounted on the object roof, a plurality of frames joined with each other by a plurality of rods parallel to moving objects, a plurality of semi-circular metallic loops circumscribing the rods and a plurality of power grids for storing energy generated by said system, wherein said system is characterized in that by the synergistic interactions among magnet mountable moving objects, frames, loops and power grids in a predetermined manner.

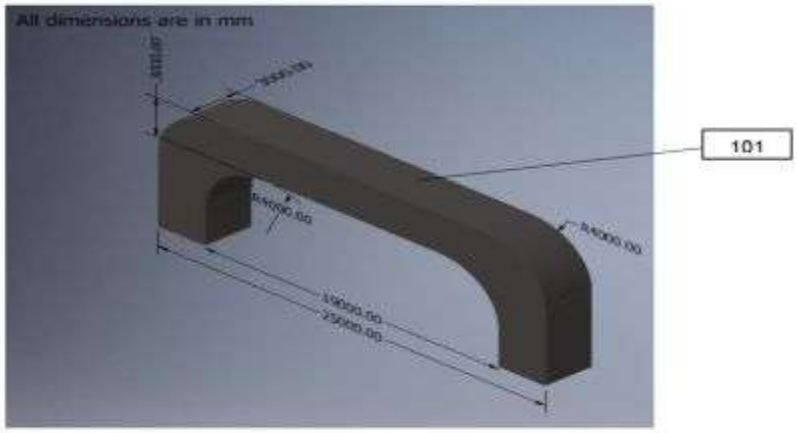

No. of Pages : 23 No. of Claims : 7

(12) PATENT APPLICATION PUBLICATION
(19) INDIA
(22) Date of filing of Application :13/01/2020

(21) Application No.202011001395 A
(43) Publication Date : 16/07/2021

(54) Title of the invention : HIGH PERFORMANCE AND SCALABLE MULTI-LAYER TOPOLOGY DISCOVERY SYSTEMS AND METHODS

(51) International classification	:H04L0029080000, H04B0010270000, H01M0004020000, H04L0029060000, G06F0017240000	(71)**Name of Applicant :** **1)Ciena Corporation** Address of Applicant :7035, Ridge Road, Hanover, Maryland United States of America ,21076 U.S.A. (72)**Name of Inventor :** **1)Cherrington John Wade** **2)Jain Ankur**
(31) Priority Document No	:NA	
(32) Priority Date	:NA	
(33) Name of priority country	:NA	
(86) International Application No	:NA	
Filing Date	:NA	
(87) International Publication No	: NA	
(61) Patent of Addition to Application Number	:NA	
Filing Date	:NA	
(62) Divisional to Application Number	:NA	
Filing Date	:NA	

(57) Abstract :
High performance and scalable multi-layer topology discovery systems and methods provide awareness of what services are present in network elements 122, 124 across a multi-layer network 100. The present disclosure achieves a high level of performance in service discovery, and, in addition, provides a form of scalability in proportion to network size by distributing service observation across servers in a cluster. The present disclosure defines a concept of change-proportional online run-time efficiency and thus provides an optimal design. Further, the present disclosure achieves horizontal scale, leveraging multiple cores across multiple servers.

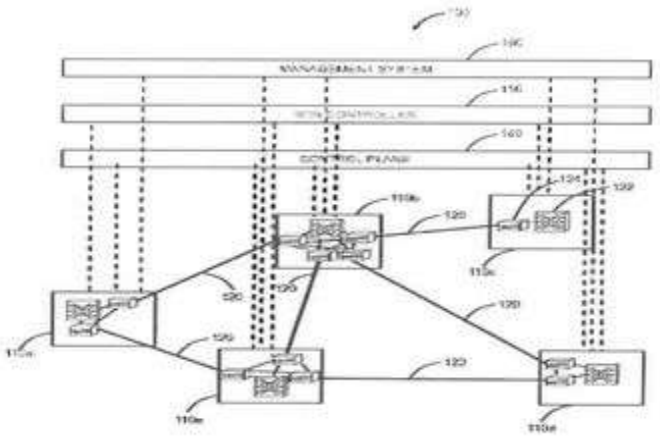

No. of Pages : 38 No. of Claims : 10

(12) PATENT APPLICATION PUBLICATION
(21) Application No.202011001417 A
(19) INDIA
(22) Date of filing of Application :13/01/2020
(43) Publication Date : 16/07/2021

(54) Title of the invention : A DUAL-BAND FILTERING ANTENNA

(51) International classification	:H01Q0009040000, H01Q0001380000, H01P0001203000, H01Q0005371000, H03H0007010000
(31) Priority Document No	:NA
(32) Priority Date	:NA
(33) Name of priority country	:NA
(86) International Application No	:NA
Filing Date	:NA
(87) International Publication No	: NA
(61) Patent of Addition to Application Number	:NA
Filing Date	:NA
(62) Divisional to Application Number	:NA
Filing Date	:NA

(71)**Name of Applicant :**
1)AMITY UNIVERSITY
Address of Applicant :E-27 DEFENCE COLONY NEW DELHI-110024, INDIA Uttar Pradesh India
(72)**Name of Inventor :**
1)SHILPAM SAXENA
2)RAGHAVENDRA SHARMA
3)MADHUR DEO UPADHYAY

(57) Abstract :
The present invention relates to a dual-band filtering antenna for L-band and C-band applications.The dual-band filtering antenna for L-band and C-band applications comprises antenna planned with glass reinforced four dielectric material, feed line have a characteristic impedance, the partial ground plane, a small rectangular slot is introduced in the ground, two resonant frequencies appear due to rectangular slot and patch while wideband is due to the measurement lengthwise of the outer patch and partial ground (figure 1). The proposed geometry uses triple frequency antenna and dual frequency filter for 1.6 GHz and 5.2 GHz frequency band. The antenna filter configuration includes a microstrip triple frequency antenna with the ground plane and a parallel coupled Band pass filter (BPF).

No. of Pages : 21 No. of Claims : 6

(12) PATENT APPLICATION PUBLICATION
(21) Application No.202011001446 A
(19) INDIA
(22) Date of filing of Application :13/01/2020
(43) Publication Date : 16/07/2021

(54) Title of the invention :DETECTION OF A2 MILK DERIVED PEPTIDE (BCM9A2) BY APTAMERS"

(51) International classification	:C12N0015115000, C07K0014470000, C12Q0001688600, H01J0049000000, C07K0016120000
(31) Priority Document No	:NA
(32) Priority Date	:NA
(33) Name of priority country	:NA
(86) International Application No	:NA
Filing Date	:NA
(87) International Publication No	: NA
(61) Patent of Addition to Application Number	:NA
Filing Date	:NA
(62) Divisional to Application Number	:NA
Filing Date	:NA

(71)**Name of Applicant :**
1)INDIAN COUNCIL OF AGRICULTURAL RESEARCH (ICAR)
Address of Applicant :KRISHI BHAWAN, DR. RAJENDERA PRASAD ROAD, NEW DELHI-110001 Delhi India
(72)**Name of Inventor :**
1)ASHOK KUMAR MOHANTY
2)ABHISHEK PARASHAR
3)SUDARSHAN KUMAR

(57) Abstract :
Eighteen aptamers specific to betacasomorphin9A2 (BCM9A2) were selected using ELISA and bead based SELEX method. The used selection method was modified version of conventional SELEX. Aptamer's M-fold structure and G-quadruplex score was analyzed . . BCM9A2 specific apatmers detected peptide in pure sample and have commercial application especially in development ofdetection method for detecting A2 milk.

No. of Pages : 16 No. of Claims : 1

(12) PATENT APPLICATION PUBLICATION
(19) INDIA
(22) Date of filing of Application :13/01/2020

(21) Application No.202011001481 A
(43) Publication Date : 16/07/2021

(54) Title of the invention : NOVEL LURASIDONE SOLUTION COMPOSITIONS AND METHOD OF PREPARATION THEREOF

(51) International classification	:A61K0009200000, A61K0031496000, A61K0045060000, A61K0009000000, A61K0031120000	(71)**Name of Applicant :** **1)NATIONAL INSTITUTE OF PHARMACEUTICAL EDUCATION AND RESEARCH, RAEBARELI** Address of Applicant :Transit Campus, Sarojini Nagar, Bijnor Sisendi Road, Near CRPF base camp, Ahmadpur urf Kamlapur, Lucknow, Uttar Pradesh-226002 Uttar Pradesh India
(31) Priority Document No	:NA	
(32) Priority Date	:NA	(72)**Name of Inventor :**
(33) Name of priority country	:NA	**1)KOLHE, Ujwal Damu**
(86) International Application No	:NA	**2)PRABAKARAN, A**
Filing Date	:NA	**3)FLORA, Swaran Jeet Singh**
(87) International Publication No	: NA	
(61) Patent of Addition to Application Number	:NA	
Filing Date	:NA	
(62) Divisional to Application Number	:NA	
Filing Date	:NA	

(57) Abstract :
The present invention relates to novel lurasidone solution compositions and method of preparation thereof. The disclosure of the invention provides a stable pharmaceutical composition of Lurasidone base or its salts comprising one or more of inactive agents selected from the pharmaceutically acceptable excipients. These compositions can be given orally or parenterally to treat schizophrenia to enhance the bioavailability.

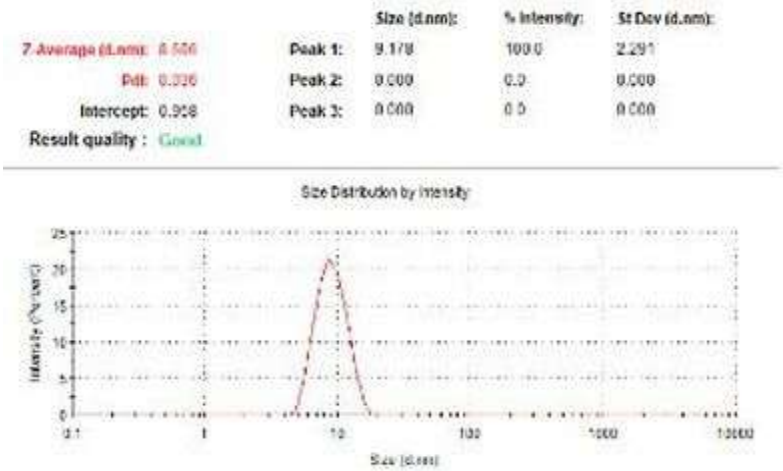

No. of Pages : 29 No. of Claims : 10

(12) PATENT APPLICATION PUBLICATION
(21) Application No.202011001505 A
(19) INDIA
(22) Date of filing of Application :13/01/2020
(43) Publication Date : 16/07/2021

(54) Title of the invention : MODIFIED ULTRASONIC MACHINING PROCESS

(51) International classification	:B24B0001040000, B33Y0010000000, B24D0018000000, C23C0016320000, B23H0005040000	(71)**Name of Applicant :** **1)GURU NANAK DEV ENGINEERING COLLEGE** Address of Applicant :Gill Park, Gill Road, Ludhiana 141006, Punjab, India Punjab India (72)**Name of Inventor :** **1)SINGH, Rupinder**
(31) Priority Document No	:NA	
(32) Priority Date	:NA	
(33) Name of priority country	:NA	
(86) International Application No	:NA	
Filing Date	:NA	
(87) International Publication No	: NA	
(61) Patent of Addition to Application Number	:NA	
Filing Date	:NA	
(62) Divisional to Application Number	:NA	
Filing Date	:NA	

(57) Abstract :
An Ultrasonic machining process to improve the tool life and surface finish of the machined surface is disclosed herein. The process comprises the steps of preparing (step 1) thermoplastic based feed stock for filament wire comprising reinforcements by twin screw extrusion; running (step 2) the feed stock on fused deposition modelling (3D printer) to prepare rapid tooling (step 3) for ultrasonic drilling; and performing (step 4) ultrasonic machining with rapid tooling assembly by combining ultrasonic drilling and broaching as a hybrid process. The process can further comprises allowing (step 5) the hybrid tool to run without the use of slurry (comprising of abrasive particles and water circulated through pump). Also, the process comprises providing a potential difference or magnetic field between tool and work piece. The abrasive material is selected from Aluminium oxide (AI2O3), Silicon carbide (SiC) and combinations thereof. Reinforcement of ferromagnetic material can also be imparted.

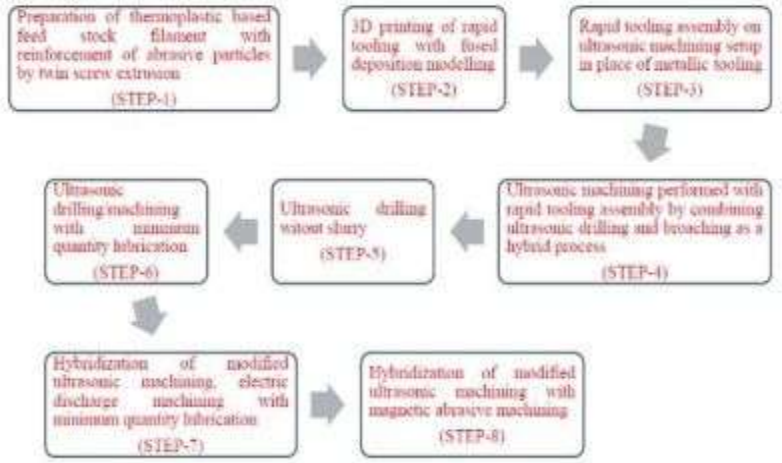

No. of Pages : 19 No. of Claims : 10

(12) PATENT APPLICATION PUBLICATION
(19) INDIA
(22) Date of filing of Application :13/01/2020

(21) Application No.202011001519 A
(43) Publication Date : 16/07/2021

(54) Title of the invention : RFID THREE STATE SECURITY E-SEAL

(51) International classification	:G06Q0010080000, G06K0019077000, G08B0013140000, H04W0088020000, G06K0019070000	(71)**Name of Applicant :** **1)LEGHORNGROUP PRIVATE LIMITED** Address of Applicant :305, MUKAND NAGAR, GHAZIABAD UTTAR PRADESH-201001 INDIA Uttar Pradesh India
(31) Priority Document No	:NA	(72)**Name of Inventor :**
(32) Priority Date	:NA	**1)GHULAM MOHAMMED SAUDAGAR**
(33) Name of priority country	:NA	
(86) International Application No	:NA	
Filing Date	:NA	
(87) International Publication No	: NA	
(61) Patent of Addition to Application Number	:NA	
Filing Date	:NA	
(62) Divisional to Application Number	:NA	
Filing Date	:NA	

(57) Abstract :
The present invention relates in general to e-seal and in particular to electronic e-seals (e-seals) for logistic and transport use. More in detail, the invention relates to a RFID security with improved tampering resistance.

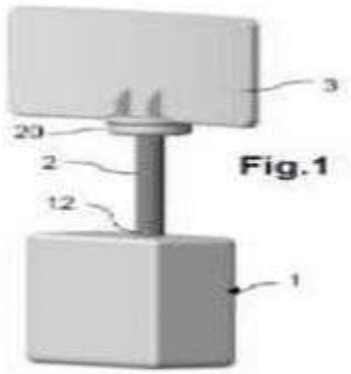

Fig.1

No. of Pages : 20 No. of Claims : 20

(12) PATENT APPLICATION PUBLICATION
(19) INDIA
(22) Date of filing of Application :14/01/2020

(21) Application No.202011001700 A
(43) Publication Date : 16/07/2021

(54) Title of the invention :A NOVEL POROUS SCAFFOLD FOR ORTHOPEDIC APPLICATION AND A METHOD OF PREPARATION THEREOF"

(51) International classification	:A61L0027560000, C12N0005000000, A61L0027580000, C23C0018300000, B01J0020100000	(71)**Name of Applicant :** **1)INDIAN INSTITUTE OF TECHNOLOGY (BANARAS HINDU UNIVERSITY), VARANASI** Address of Applicant :Varanasi-221005, Uttar Pradesh, India Uttar Pradesh India
(31) Priority Document No	:NA	(72)**Name of Inventor :**
(32) Priority Date	:NA	**1)KALYANI MOHANTA**
(33) Name of priority country	:NA	**2)MAYANK KUMAR YADAV**
(86) International Application No	:NA	**3)VAIBHAV PANDEY**
Filing Date	:NA	**4)AJAY KUMAR**
(87) International Publication No	: NA	
(61) Patent of Addition to Application Number	:NA	
Filing Date	:NA	
(62) Divisional to Application Number	:NA	
Filing Date	:NA	

(57) Abstract :
The present invention provides a porous scaffold for an orthopedic application utilizing waste material and a process of preparation thereof. The present invention provides a porous scaffold for bone regeneration utilizing waste bones with improved mechanical strength, a wide range of porosity that is made into desired shapes and dimensions and a process of preparation thereof used for a wide range of applications.

No. of Pages : 15 No. of Claims : 8

(12) PATENT APPLICATION PUBLICATION
(21) Application No.202011001753 A
(19) INDIA
(22) Date of filing of Application :15/01/2020
(43) Publication Date : 16/07/2021

(54) Title of the invention : A SYNERGISTIC PHARMACEUTICAL ORAL OR NASAL SPRAY FORMULATION AND A PROCESS THEREOF

(51) International classification	:A61K0009000000, A61K0031714000, A61K0039395000, A61K0047180000, A61K0031525000	(71)**Name of Applicant :** **1)Jatinder Dhari** Address of Applicant :working at Biodeal Pharmaceutical Private Limited, Nalagarh Ropar Road, Village Sainimajra, Nalagarh District, Solan 174 101, Himachal Pradesh, India. Himachal Pradesh India
(31) Priority Document No	:NA	(72)**Name of Inventor :**
(32) Priority Date	:NA	**1)Jatinder Dhari**
(33) Name of priority country	:NA	**2)Anurag Kumar**
(86) International Application No	:NA	
Filing Date	:NA	
(87) International Publication No	: NA	
(61) Patent of Addition to Application Number	:NA	
Filing Date	:NA	
(62) Divisional to Application Number	:NA	
Filing Date	:NA	

(57) Abstract :
The present disclosure provides a synergistic pharmaceutical oral or nasal spray formulation comprising methylcobalamin, thiamine, riboflavin, niacin, pantothenic acid, biotin, folate, pyridoxine, and Vitamin D3 optionally along with propylene glycol, glycerine, benzalkonium chloride, disodium edentate, sodium phosphate monobasic dihydrate and distilled water. In addition, the present disclosure provides a unique process for the preparation of said formulations. The formulation of the present disclosure is associated with higher bioavailability and synergy than the currently available formulations of methylcobalamin.

No. of Pages : 14 No. of Claims : 10

(12) PATENT APPLICATION PUBLICATION
(19) INDIA
(22) Date of filing of Application :15/01/2020

(21) Application No.202011001758 A
(43) Publication Date : 16/07/2021

(54) Title of the invention :RAIN WATER HARVESTING STRUCTURE FOR SAFFRON (CROCUS SATIVUS)"

(51) International classification	:A61K0036880000, E03B0003280000, E03B0003030000, A61K0036285000, A23K0020174000	(71)**Name of Applicant :** **1)SHER-E-KASHMIR, UNIVERSITY OF AGRICULTURE SCIENCES AND TECHNOLOGY OF KASHMIR** Address of Applicant :SHALIMAR SRINAGAR JAMMU AND KASHMIR-190025, INDIA Jammu & Kashmir India
(31) Priority Document No	:NA	
(32) Priority Date	:NA	(72)**Name of Inventor :**
(33) Name of priority country	:NA	**1)DR. WASEEM RAJA**
(86) International Application No	:NA	
Filing Date	:NA	
(87) International Publication No	: NA	
(61) Patent of Addition to Application Number	:NA	
Filing Date	:NA	
(62) Divisional to Application Number	:NA	
Filing Date	:NA	

(57) Abstract :
A rain water harvesting system that is easy to operate, zero external energy consumption and overcome the most of-limitation in the conventional water harvesting structure for saffron crop. The system coniprises of a water harvesting surface, water storage tank and distribution system. The water harvesting surface is mounted over the water storage tank and is kept on comers of raised beds of saffron crop 30cm to 40cm above the ground level. The storage tank is connected to distribution system. The distribution system consists of valve, main pipe and sub-main pipe. The sub-main pipe is provided with perforation. The rain water is collected by water harvesting surface and enter at the centre of water harvesting surface into the storage tank. The water harvested is stored in storage tank. From storage tank harvested water enters the distribution system trough the exit port. The water when needed (controlled by valve) is distributed trough main pipe, sub-main pipe and perforations of distribution system to saffron crop. The whole system runs under the influence of gravity

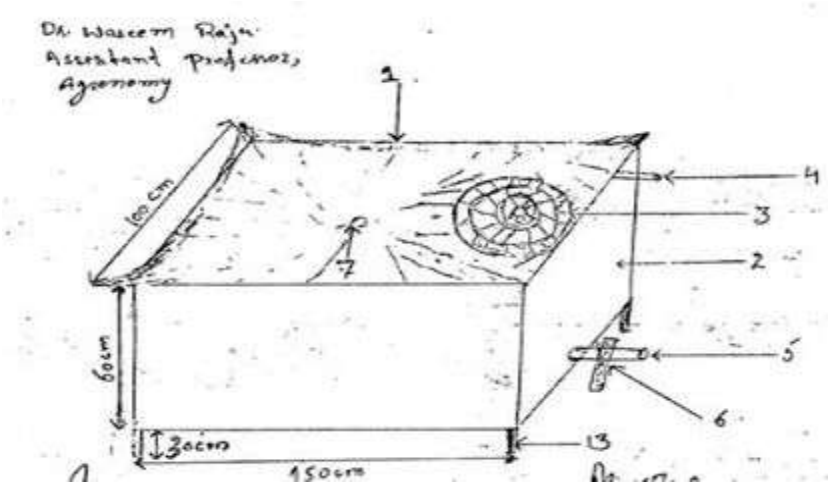

No. of Pages : 11 No. of Claims : 5

(12) PATENT APPLICATION PUBLICATION
(21) Application No.202011001775 A
(19) INDIA
(22) Date of filing of Application :15/01/2020
(43) Publication Date : 16/07/2021

(54) Title of the invention : IMPROVED SOLAR PANEL CLEANING DEVICE

(51) International classification	:H02S0040100000, F24S0040200000, B08B0001000000, B08B0001040000, G05D0001020000	(71)**Name of Applicant :** **1)Atmus Robotics LLP** Address of Applicant :L-113, Chanakya Place, Part-II, New Delhi-110059, India. Delhi India
(31) Priority Document No	:NA	(72)**Name of Inventor :** **1)KUMAR, Ravinder**
(32) Priority Date	:NA	**2)CHAMAN, Hari**
(33) Name of priority country	:NA	**3)UPPAL, Sahil**
(86) International Application No	:NA	**4)SINGH, Tanpreet**
Filing Date	:NA	**5)KANDHARI, Tanishq**
(87) International Publication No	: NA	**6)YADAV, Vinod Kumar**
(61) Patent of Addition to Application Number	:NA	
Filing Date	:NA	
(62) Divisional to Application Number	:NA	
Filing Date	:NA	

(57) Abstract :
A solar panel cleaning device is disclosed. The device includes a support frame movably fitted on an array of solar panels, one or more cleaning elements rotatably coupled to the support frame for cleaning the array of solar panels, a set of drive wheels operatively coupled to opposite ends of the support frame to enable movement of the support frame, and a drive unit that is operatively coupled to the one or more cleaning elements and the set of drive wheels to rotate the one or more cleaning elements and the set of drive wheels. A plurality of idler wheels is provided with the support frame to prevent skidding of the support frame and to support movement of the support frame.

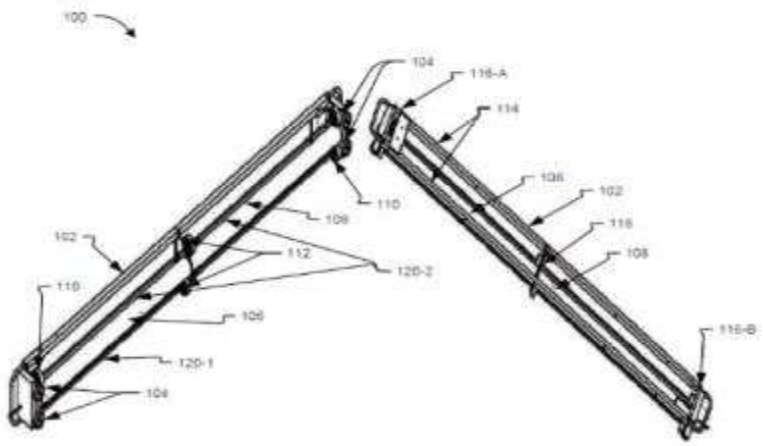

No. of Pages : 17 No. of Claims : 10

(12) PATENT APPLICATION PUBLICATION
(21) Application No.202011001810 A
(19) INDIA
(22) Date of filing of Application :15/01/2020
(43) Publication Date : 16/07/2021

(54) Title of the invention :VEHICLE BACK DOOR FOR IMPROVING REARWARD VISIBILITY"

(51) International classification	:B60J0005100000, B60R0013020000, B60Q0001320000, B60J0001180000, B60R0005040000	(71)**Name of Applicant :** **1)MARUTI SUZUKI INDIA LIMITED** Address of Applicant :1, Nelson Mandela Road, Vasant Kunj, New Delhi, Delhi -110070, India. Delhi India (72)**Name of Inventor :** **1)TARUN GUPTA** **2)NILESH LAXMANBHAI RATHOD** **3)PRADEEP CHANDRA S**
(31) Priority Document No	:NA	
(32) Priority Date	:NA	
(33) Name of priority country	:NA	
(86) International Application No	:NA	
Filing Date	:NA	
(87) International Publication No	: NA	
(61) Patent of Addition to Application Number	:NA	
Filing Date	:NA	
(62) Divisional to Application Number	:NA	
Filing Date	:NA	

(57) Abstract :
Described herein is a vehicle back door (200) for improving rearward visibility. The vehicle back door (200) includes a back door pane (202) having a lower-end region that is extended below a top edge of a garnish (216) to allow a snap-fit mounting unit (220) of the garnish (216) to pass through the back door pane (202) for mounting of the garnish (216) on the vehicle back door (200).

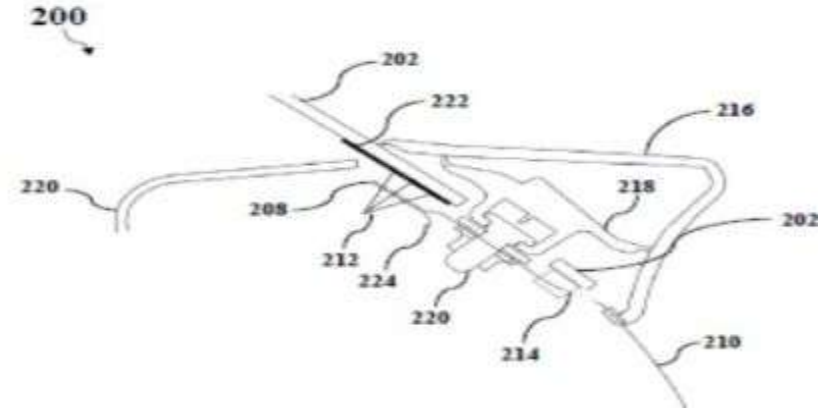

No. of Pages : 17 No. of Claims : 10

(12) PATENT APPLICATION PUBLICATION
(21) Application No.202011001812 A
(19) INDIA
(22) Date of filing of Application :15/01/2020
(43) Publication Date : 16/07/2021

(54) Title of the invention : A PROCESS FOR THE SELECTIVE EXTRACTION OF EUROPIUM (EU) AND YTTRIUM (Y) FROM PHOSPHOR POWDER OF OBSOLETE FLUORESCENT LAMPS

(51) International classification	:C22B0059000000, C22B0007000000, C09K0011770000, C09K0011020000, C09K0011010000	(71)**Name of Applicant :** **1)COUNCIL OF SCIENTIFIC AND INDUSTRIAL RESEARCH** Address of Applicant :ANUSANDHAN BHAWAN, 2 RAFI MARG NEW DELHI DELHI-110001, INDIA Delhi India
(31) Priority Document No	:NA	(72)**Name of Inventor :**
(32) Priority Date	:NA	**1)ARCHANA KUMARI**
(33) Name of priority country	:NA	**2)MANIS KUMAR JHA**
(86) International Application No	:NA	**3)REKHA PANDA**
Filing Date	:NA	**4)JHUMKI HAIT**
(87) International Publication No	: NA	
(61) Patent of Addition to Application Number	:NA	
Filing Date	:NA	
(62) Divisional to Application Number	:NA	
Filing Date	:NA	

(57) Abstract :
The present invention relates to selective separation of Europium (Eu) and Yttrium (Y) from phosphor powder of obsolete fluorescent lamps leaving other REMs and impurities in the residue. This invention particularly relates to the selective recovery of Rare Earth Metals (REMs), Eu and Y from the Phosphor powder of obsolete fluorescent lamps (leaving behind La, Ce and Tb in the residue) by leaching with suitable lixiviant depending oh the composition of phosphor powder followed by its recovery from the leach liquor using solvent extraction technique. Phosphor powder collected from scrap fluorescent lamps were tested and found to contain five REMs (2-8% La, 2-10% Ce, 0.5-5% Tb, 0.5 -5% Eu and 10-30% Y) with other metals like Calcium, Aluminum, etc.

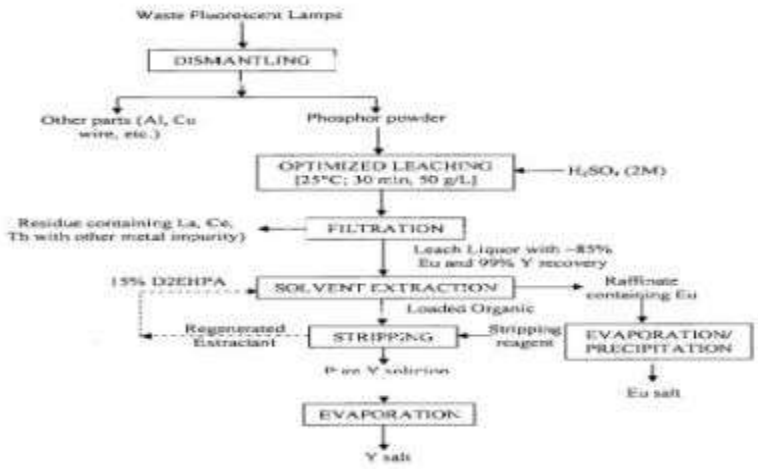

No. of Pages : 15 No. of Claims : 4

(12) PATENT APPLICATION PUBLICATION
(21) Application No.202011001826 A
(19) INDIA
(22) Date of filing of Application :15/01/2020
(43) Publication Date : 16/07/2021

(54) Title of the invention : A HALBACH ARRAY OF RECTANGULAR MAGNETS AND METHOD OF CONSTRUCTION THEREOF TO FORM ELECTRODYNAMIC RADIAL BEARINGS

(51) International classification	:F16C0032040000, B60L0013040000, H02K0001270000, H01F0007020000, B03C0001247000	(71)**Name of Applicant :** **1)COUNCIL OF SCIENTIFIC AND INDUSTRIAL RESEARCH** Address of Applicant :ANUSANDHAN BHAWAN, 2 RAFI MARG NEW DELHI DELHI-110001, INDIA Delhi India
(31) Priority Document No	:NA	(72)**Name of Inventor :**
(32) Priority Date	:NA	**1)PRANAB SAMANTA**
(33) Name of priority country	:NA	**2)NARESH CHANDRA MARMU**
(86) International Application No	:NA	**3)DEEPAK KUMAR BHAKTA**
Filing Date	:NA	
(87) International Publication No	: NA	
(61) Patent of Addition to Application Number	:NA	
Filing Date	:NA	
(62) Divisional to Application Number	:NA	
Filing Date	:NA	

(57) Abstract :
It is an object underlying the invention to develop electrodynamic bearing [EDB] having larger loads carrying capacity with minimum cost and flexible mounting system for supporting an electrically conductive rotor. This object is resolved by forming rectangular shape bearing with rectangular magnets arranged in halbach array to strengthen the magnetic flux in the bearing with minimum number of permanent magnets kept in split housing system joined by a guided pin for easy assembling and disassembling as well as joining two interfaces acted upon repulsive forces in Halbach array using metal strip of magnetic material which helps to create continuous azimuthal magnetic path. In principle, the levitation force is generated when the eddy current induced in a conductor rotating in varying magnetic field creates its own magnetic field opposing to the magnet"s field. In other words, the bearing according to the invention does not require any costly control systems, power electronics or sensors.

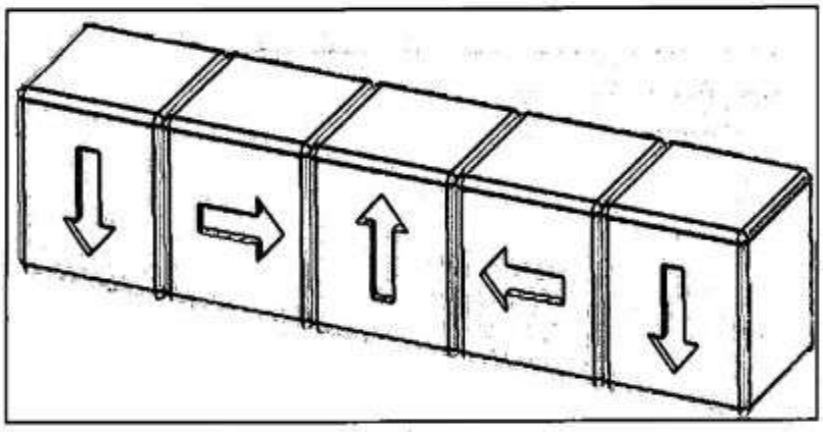

No. of Pages : 19 No. of Claims : 12

(12) PATENT APPLICATION PUBLICATION
(21) Application No.202011001827 A
(19) INDIA
(22) Date of filing of Application :15/01/2020
(43) Publication Date : 16/07/2021

(54) Title of the invention : THERMAL ADDITIVE CENTRIFUGAL ABRASIVE FLOWMACHINING AND METHOD THEREOF

(51) International classification	:B24B0031116000, G01N0019060000, B24B0001000000, B24C0011000000, B24B0021020000	(71)**Name of Applicant :** **1)The Registrar, Delhi Technological University** Address of Applicant :Delhi Technological University, Shahbad Daulatpur, Main Bawana Road, Delhi-110042, India Delhi India
(31) Priority Document No	:NA	(72)**Name of Inventor :**
(32) Priority Date	:NA	**1)PARVESH ALI**
(33) Name of priority country	:NA	**2)R.S. WALIA**
(86) International Application No	:NA	**3)QASIM MURTAZA**
Filing Date	:NA	**4)RANGANATH M.S.**
(87) International Publication No	: NA	
(61) Patent of Addition to Application Number	:NA	
Filing Date	:NA	
(62) Divisional to Application Number	:NA	
Filing Date	:NA	

(57) Abstract :
The present invention discloses a thermal additive centrifugal assisted Abrasive Flow Machine for micro/nano finishing of the complex geometries. In an embodiment, the centrifugal force assisted abrasive flow machine with spark generation system removes material by thermal evaporation, melting and abrasion mechanism. The spark generated between the electrode and the finishing surface developed high temperature on the surface and melted the surface so that the abrasive particles in the media can easily carry out the soften material and provide better material removal and surface finish. The material removal and surface finish are improved by using the thermal spark energy between the rotating electrode and the workpiece surface by melting the surface material.

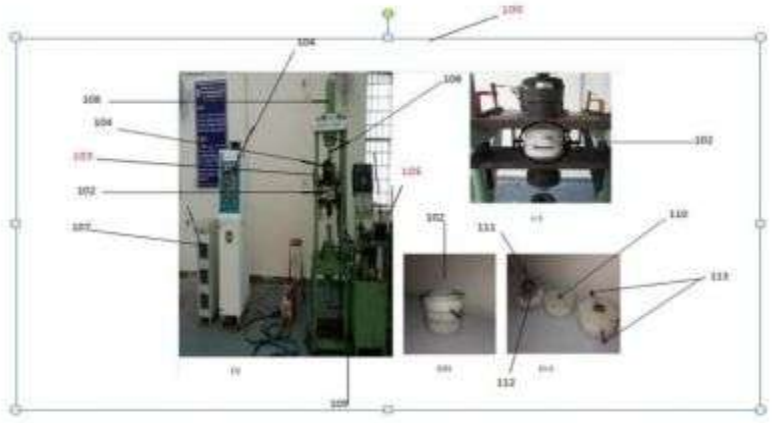

No. of Pages : 28 No. of Claims : 10

(12) PATENT APPLICATION PUBLICATION
(21) Application No.202011001829 A
(19) INDIA
(22) Date of filing of Application :15/01/2020
(43) Publication Date : 16/07/2021

(54) Title of the invention : DEVELOPMENT OF HIGHLY SENSITIVE AND SELECTIVE NANOBIOSENSOR FOR DETECTION AND ABLATION OF FOOD BACTERIA

(51) International classification	:G01N0033543000, A61K0047690000, G01N0033569000, C12Q0001682500, B82Y0015000000
(31) Priority Document No	:NA
(32) Priority Date	:NA
(33) Name of priority country	:NA
(86) International Application No	:NA
Filing Date	:NA
(87) International Publication No	: NA
(61) Patent of Addition to Application Number	:NA
Filing Date	:NA
(62) Divisional to Application Number	:NA
Filing Date	:NA

(71)**Name of Applicant :**
1)National Agri Food Biotechnology Institute
Address of Applicant :National Agri-Food Biotechnology Institute (NABI) (An autonomous Institute of Department, Govt. of India), Sector-81 (knowledge City), PO Manauli, S.A.S. Nagar, Mohali-140306, Punjab, India. Punjab India
(72)**Name of Inventor :**
1)NITIN KUMAR SINGHAL
2)SHIMAYALI KAUSHAL

(57) Abstract :
Food protection draws vast interest within the modern pace of the sector owing to fast-changing meals recipes and food behavior. Food borne diseases are a major health concern and can add tremendous financial burden to our health care systems. Conventional methods have been used due to their ability to monitor cell viability but they are very time consuming which cannot meet the needs of real-time detection. Nanotechnology has emerged as a great field in case of rapid detection of pathogens in recent years. Integration of metallic nanoparticles into biosensor has achieved recognition for its ability to increase bacterial detection due to their unique optical and plasmonic properties. In the present work, gold nanoparticles (AuNPs) based sensor has been developed for swift and sensitive detection of food borne bacteria. Polyethylene glycol (PEG) conjugated Graphene Oxide coated AuNPs were covalently functionalized with different types of antibodies using EDC NHS coupling reaction. The sensitivity of synthesized nanobiosensor was probed by colorimetric change with food borne bacteria (Escherichia coli, Salmonella typhimurium) visibly and by using spectrophotometric and microscopic techniques. Due to the specific interaction of antibody coated probe with food borne bacteria, our nanoprobe has shown significant and selective photoablation of targeted bacteria. This nanorod based nanobiosensor can be an ideal candidate for optical detection and killing of food borne bacteria.

No. of Pages : 15 No. of Claims : 7

(12) PATENT APPLICATION PUBLICATION
(21) Application No.202011001830 A
(19) INDIA
(22) Date of filing of Application :15/01/2020
(43) Publication Date : 16/07/2021

(54) Title of the invention : A PROCESS FOR HOT STAGE MODIFICATION OF COPPER SMELTER SLAG FOR RECOVERY OF IRON AND SUBSEQUENT USE OF SLAG IN CEMENT

(51) International classification	:C21B0013000000, C01G0049060000, F27D0017000000, C22B0034120000, C04B0028080000
(31) Priority Document No	:NA
(32) Priority Date	:NA
(33) Name of priority country	:NA
(86) International Application No	:NA
Filing Date	:NA
(87) International Publication No	: NA
(61) Patent of Addition to Application Number	:NA
Filing Date	:NA
(62) Divisional to Application Number	:NA
Filing Date	:NA

(71)**Name of Applicant :**
1)COUNCIL OF SCIENTIFIC AND INDUSTRIAL RESEARCH
Address of Applicant :ANUSANDHAN BHAWAN, 2 RAFI MARG NEW DELHI DELHI-110001, INDIA Delhi India
(72)**Name of Inventor :**
1)NAVNEET SINGH RANDHAWA
2)SUSANTA KUMAR NATH
3)SANJAY KUMAR

(57) Abstract :
The present invention relates to an improved process for the modification of waste copper smelter slag in hot stage to obtain iron in the form of iron-rich alloy and further modification of liquid slag to use it into slag cement composition. During hot stage processing, iron is removed by using carbonaceous reductant and slag is modified by rational addition of basic flux in an electric arc furnace. The novelty of the present invention accounts an improved smelting procedure including stage-wise addition of flux in appropriate ratios in significantly less time to yield iron-rich alloy and slag suitable forcement preparation. The iron alloy recovery by the invention is in the range of 85-99%. Therefore, the present invention achieves an eco-friendly and zero waste process by extraction of iron value from slag and, subsequent use of remaining waste slag into fabrication of cement composition.

No. of Pages : 15 No. of Claims : 10

(12) PATENT APPLICATION PUBLICATION
(19) INDIA
(22) Date of filing of Application :15/01/2020

(21) Application No.202011001844 A
(43) Publication Date : 16/07/2021

(54) Title of the invention : SENSOR DEVICE FOR OBTAINING VITAL SIGNS OF FOETUS

(51) International classification	:A61B0005000000, A61B0005024000, G02B0006293000, H01G0004005000, A61B0005080000	(71)**Name of Applicant :** **1)Janitri Innovations Private Limited** Address of Applicant :207, Apex Tower, Lal Kothi, Tonk Road, Jaipur, Rajasthan (302016) Rajasthan India (72)**Name of Inventor :** **1)Arun Agarwal**
(31) Priority Document No	:NA	
(32) Priority Date	:NA	
(33) Name of priority country	:NA	
(86) International Application No	:NA	
Filing Date	:NA	
(87) International Publication No	: NA	
(61) Patent of Addition to Application Number	:NA	
Filing Date	:NA	
(62) Divisional to Application Number	:NA	
Filing Date	:NA	

(57) Abstract :
Disclosed is a sensor device for obtaining vital signs of a foetus, the sensor device comprising front portion and rear portion. The sensor device comprises first electrode, second electrode, third electrode and fourth electrode arranged on front portion at predetermined positions. The first electrode and the third electrode are placed on lateral midline of abdominal region, and first electrode and third electrode are equidistant from a navel of pregnant woman along lateral midline. The second electrode and the fourth electrode are placed on a longitudinal midline of abdominal region. The second electrode and the fourth electrode are equidistant from the navel along longitudinal midline; a ratio of distance of first electrode and/or third electrode from navel and distance of second electrode and/or fourth electrode from navel is in a range of 0.25 to 0.50.

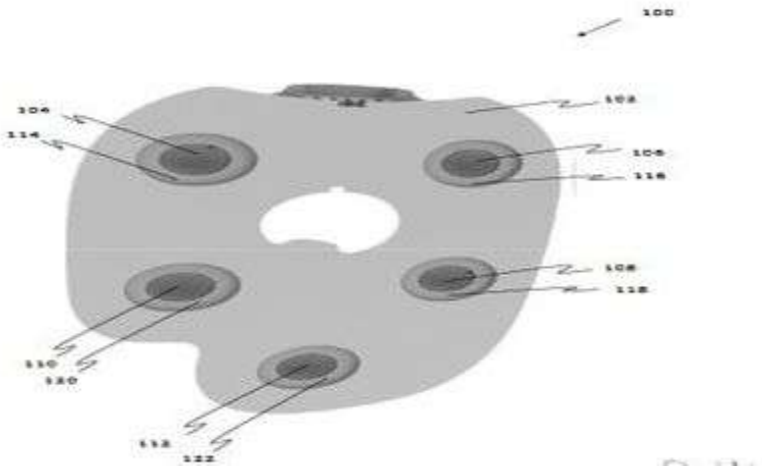

No. of Pages : 25 No. of Claims : 10

(12) PATENT APPLICATION PUBLICATION
(19) INDIA
(22) Date of filing of Application :11/01/2020

(21) Application No.202013001300 A
(43) Publication Date : 16/07/2021

(54) Title of the invention : A SLOW REACTING RECYCLABLE EPOXY RESIN SYSTEM FOR STRUCTURAL COMPOSITES

(51) International classification	:C08L0063000000, C08G0059500000, C08G0059180000, C09J0163000000, C09D0005030000	
(31) Priority Document No	:NA	
(32) Priority Date	:NA	
(33) Name of priority country	:NA	
(86) International Application No	:NA	
Filing Date	:NA	
(87) International Publication No	: NA	
(61) Patent of Addition to Application Number	:	
Filed on	:01/01/1900	
(62) Divisional to Application Number	:NA	
Filing Date	:NA	

(71)**Name of Applicant :**
1)ADITYA BIRLA CHEMICALS (THAILAND) LTD. (ADVANCED MATERIALS)
Address of Applicant :888/167, 16TH FLOOR, MAHATUN PLAZA BUILDING, PLOENCHIT ROAD, LUMPINI, BANGKOK 10330, THAILAND Thailand
(72)**Name of Inventor :**
1)DUBEY, PRADIP KUMAR
2)DIXIT, AMIT
3)CHANGMONGKOL, SIRIRAT
4)INCHAMNAN, KANCHANA
5)SAKATHOK, WASINEE

(57) Abstract :
A slow reacting recyclable epoxy resin system for structural composites is disclosed. The slow reacting recyclable epoxy resin system comprises an epoxy resin component comprising a high purity epoxy resin selected from a high purity Bisphenol A (BPA) epoxy resin, a high purity Bisphenol F (BPF) epoxy resin and a combination thereof wherein the high purity epoxy resin is in a range of 20 to 95 wt.% of the total weight of the epoxy resin component, a standard epoxy resin selected from a standard bisphenol A (BPA) epoxy resin, a standard Bisphenol F (BPF) epoxy resin and a combination thereof wherein the standard epoxy resin is in a range of 1 to 50 wt.% of the total weight of the epoxy resin component; and a curing agent component comprising a curing agent having at least one cleavage linkage selected from a group comprising of an acetal linkage, a ketal linkage, a formal linkage, an orthoester linkage or a siloxy linkage. The pot life of the slow reacting recyclable epoxy resin system is more than 540 minutes at 25 °C.

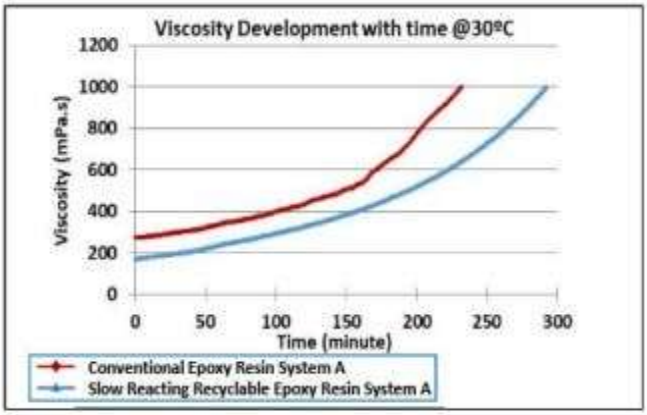

No. of Pages : 45 No. of Claims : 26

(12) PATENT APPLICATION PUBLICATION
(21) Application No.202014018438 A
(19) INDIA
(22) Date of filing of Application :30/04/2020
(43) Publication Date : 16/07/2021

(54) Title of the invention : METHOD OF ASSEMBLING A LOWER ELECTRODE MECHANISM FOR WELDING AND LOWER ELECTRODE MECHANISM FOR WELDING

(51) International classification	:G02B0007020000, F16F0009320000, H01M0010480000, F16L0055124000, F42B0033000000	(71)**Name of Applicant :** **1)SMK Co., Ltd.** Address of Applicant :830-5 Ooi, Midori-ku, Sagamihara-shi, Kanagawa 252-0152, JAPAN Japan
(31) Priority Document No	:2020-004688	(72)**Name of Inventor :** **1)HIDAKA, Masato**
(32) Priority Date	:15/01/2020	
(33) Name of priority country	:Japan	
(86) International Application No	:NA	
Filing Date	:NA	
(87) International Publication No	: NA	
(61) Patent of Addition to Application Number	:NA	
Filing Date	:NA	
(62) Divisional to Application Number	:NA	
Filing Date	:NA	

(57) Abstract :
In a method of assembling a lower electrode mechanism 1, after a support tube 5 and an electrode holder 4 are integrally assembled, a cylindrical assembly case 13 is inserted into the support tube 5 from the bottom to align an elongated hole 5h of the support tube 5 with an elongated hole 13h of the assembly case 13 to assemble them. The rod assembly 7 10 is inserted into the tube from the upper part of the electrode holder 4 to fix the rod assembly 7 inside of the assembly case 13 in the support tube 5. The lower end of the rod 8 of the rod assembly 7 is placed to a position visible through the elongated hole 5h of the support tube 5. A protruding bar 14 is inserted into the support tube 5 through the elongated hole 5h of the support tube 5, the base end of the protruding bar 14 is fixed to 15 the lower end of the rod 8, and the slide sensor 15 is attached to the support tube 5 while the distal end of the protruding bar 14 and detector 15a of the slide sensor 15 are connected.

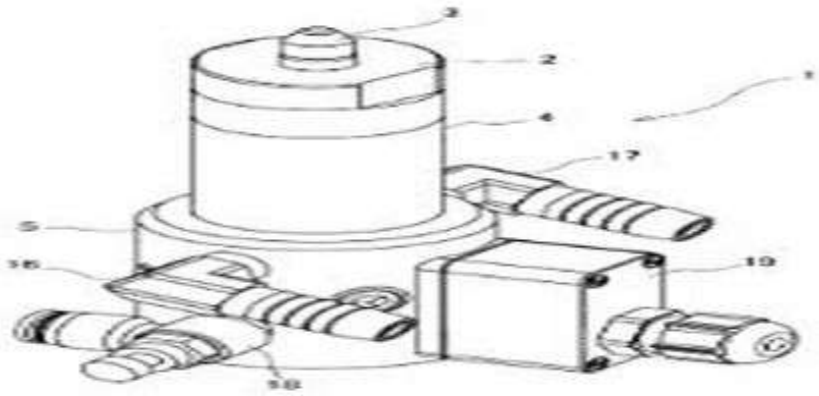

FIG. 1

No. of Pages : 18 No. of Claims : 6

(12) PATENT APPLICATION PUBLICATION
(19) INDIA
(22) Date of filing of Application :30/07/2020
(21) Application No.202014032729 A
(43) Publication Date : 16/07/2021

(54) Title of the invention : CAMERA MODULE POP-UP APPARATUS AND MOBILE TERMINAL

(51) International classification	:H04N0005225000, H04M0001020000, G06F0001320300, H04N0005232000, G02B0007090000
(31) Priority Document No	:202010023319.1
(32) Priority Date	:09/01/2020
(33) Name of priority country	:China
(86) International Application No	:NA
Filing Date	:NA
(87) International Publication No	: NA
(61) Patent of Addition to Application Number	:NA
Filing Date	:NA
(62) Divisional to Application Number	:NA
Filing Date	:NA

(71)**Name of Applicant :**
1)SHENZHEN TRANSSION HOLDINGS CO., LTD.
Address of Applicant :Room 1702-1703, Desay Building, No.9789 Shennan Road, Hi-tech Park, Nanshan District, Shenzhen 518057, China China
(72)**Name of Inventor :**
1)GAO, Peiyi
2)WANG, Dong
3)XU, Ning
4)XIAO, Feng
5)ZHU, Yong
6)ZHAI, Conggui
7)XU, Yunsheng

(57) Abstract :
ABSTRACT CAMERA MODULE POP-UP APPARATUS AND MOBILE TERMINAL The application provides a camera module pop-up apparatus, including a camera module, a driving unit, a transmission unit and a controlling unit, wherein the driving unit drives the camera module to extend and/or retract via the transmission unit, the controlling unit controls a power of the driving unit according to a moving position of the camera module to adjust the moving speed of the camera module. The controlling unit of the invention controls the driving unit with variable frequency to control the moving speed of the camera module, so as to ensure that the camera module does not collide violently with a mobile terminal, which is beneficial in improving the service life. The invention also relates to a mobile terminal.

No. of Pages : 32 No. of Claims : 18

(12) PATENT APPLICATION PUBLICATION
(21) Application No.202014038903 A
(19) INDIA
(22) Date of filing of Application :09/09/2020
(43) Publication Date : 16/07/2021

(54) Title of the invention : TIME-RESOLVED FLUORESCENCE IMMUNOCHROMATOGRAPHY TEST PAPER CARD FOR DETECTING BUTRALIN •

(51) International classification	:A01N0033180000, G01N0033558000, G01N0021640000, G01N0033577000, G01N0021470000	(71)**Name of Applicant :** **1)Tobacco Research Institute of Chinese Academy of Agricultural Sciences** Address of Applicant :11 Keyuanjing 4th Road, Laoshan District, Qingdao, Shandong, China China
(31) Priority Document No	:202010028344. 9	(72)**Name of Inventor :**
(32) Priority Date	:10/01/2020	**1)WANG, Xiuguo**
(33) Name of priority country	:China	**2)ZHENG, Xiao**
(86) International Application No	:NA	**3)LIU, Yalei**
Filing Date	:NA	**4)FANG, Kuan**
(87) International Publication No	: NA	**5)ZHANG, Xiaolian**
(61) Patent of Addition to Application Number	:NA	
Filing Date	:NA	
(62) Divisional to Application Number	:NA	
Filing Date	:NA	

(57) Abstract :
The disclosure provides a time-resolved fluorescence immunochromatography test paper card for detecting butralin, relating to the technical field of detection, which comprises a cover body and a housing body, wherein the cover body is provided with a test hole, a loading hole and a through-hole, an isolating mechanism is arranged in the test hole and the loading hole, the isolating mechanism comprises a first isolating ring and a second isolating ring, the top lateral walls of which are respectively provided with a first lug boss and a second lug boss, the inner wall of the second lug boss is provided with a filter screen, the interior of the housing body is provided with a first clamping groove and a second clamping groove arranged oppositely, two ends of a working board are connected to the first clamping groove and the second clamping groove respectively, a damper is provided at the edge of the upper surface of the working board, one end of the upper surface of the working board is concave towards the inner of the working board to provide a groove, the interior of the groove is provided with a water absorbing block, there is a nitrocellulose membrane, a binding pad, a sample pad and a mark zone successively provided between the water absorbing block and the other end of the working board, and the lateral wall at one end of the working board is provided with a bump. The invention has the advantages of simple operation, high accuracy and low cost.

No. of Pages : 13 No. of Claims : 7

(12) PATENT APPLICATION PUBLICATION
(21) Application No.202014052813 A
(19) INDIA
(22) Date of filing of Application :03/12/2020
(43) Publication Date : 16/07/2021

(54) Title of the invention : PLUNGER TIP, INJECTION DEVICE, AND INJECTION METHOD

(51) International classification	:B22D0017200000, A61M0005315000, A61M0005320000, B22D0017040000, B29C0045540000
(31) Priority Document No	:2020-003651
(32) Priority Date	:14/01/2020
(33) Name of priority country	:Japan
(86) International Application No	:NA
Filing Date	:NA
(87) International Publication No	: NA
(61) Patent of Addition to Application Number	:NA
Filing Date	:NA
(62) Divisional to Application Number	:NA
Filing Date	:NA

(71)**Name of Applicant :**
1)TOYOTA JIDOSHA KABUSHIKI KAISHA
Address of Applicant :1, Toyota-cho, Toyota-shi, Aichi-ken, 471-8571, Japan Japan
(72)**Name of Inventor :**
1)MATSUURA, Yoshiki

(57) Abstract :
PLUNGER TIP, INJECTION DEVICE, AND INJECTION METHOD A plunger tip (12) includes a main body of the plunger tip (12). A first cooling chamber (121) is provided at a central region of a tip end of the main body of the plunger tip 5 (12) inside the main body of the plunger tip (12). A second cooling chamber (122) is provided along an outer peripheral surface of the tip end inside the main body of the plunger tip (12). The second cooling chamber (122) is configured such that a cooling medium is caused to flow in the second cooling chamber (122) in priority to the first cooling chamber (121). 10 Selected Drawing: FIG. 1

No. of Pages : 26 No. of Claims : 9

(12) PATENT APPLICATION PUBLICATION
(19) INDIA
(22) Date of filing of Application :04/12/2020

(21) Application No.202014052890 A
(43) Publication Date : 16/07/2021

(54) Title of the invention : PROTECTION AGAINST INTERNAL FAULTS

(51) International classification	:H04N0001320000, H04N0001000000, F16K0037000000, H04N0101000000, G06F0007570000
(31) Priority Document No	:EP20151210
(32) Priority Date	:10/01/2020
(33) Name of priority country	:EPO
(86) International Application No	:NA
Filing Date	:NA
(87) International Publication No	: NA
(61) Patent of Addition to Application Number	:NA
Filing Date	:NA
(62) Divisional to Application Number	:NA
Filing Date	:NA

(71)**Name of Applicant :**
1)SIEMENS AKTIENGESELLSCHAFT
Address of Applicant :Werner-von-Siemens-Strae 1, 80333 M¼nchen, GERMANY Germany
(72)**Name of Inventor :**
1)Lang; Erik
2)Ball; Tharsice

(57) Abstract :
Protection against internal faults. Switching arrangement comprising a first processing unit (1a) and a second processing unit (1b), an OR gate (7) a first position feedback device (6a) and a first switch (5a), wherein the first position feedback device (6a) is associated with the first switch (5a) and is in operative communication with the first processing unit (1a) and with the second processing unit (1b), wherein at least one of the processing units (1a, 1b) is configured to send a digital ON signal to the OR gate (7), and the OR gate (7) is configured to actuate the first switch (5a) on receiving the digital ON signal, wherein the processing units (1a, 1b) are communicatively interconnected, and each of the processing units (1a, 1b) is configured to read a position signal from the first position feedback device (6a), to transmit the read position signal to the other processing unit (1b, 1a), to compare the read position signal with the transmitted position signal, and to output an error message if the read position signal is different from the transmitted position signal. FIG:1

No. of Pages : 47 No. of Claims : 15

(12) PATENT APPLICATION PUBLICATION
(19) INDIA
(22) Date of filing of Application :09/12/2020

(21) Application No.202014053552 A
(43) Publication Date : 16/07/2021

(54) Title of the invention : TEST ARRANGEMENT AND METHOD FOR FATIGUE TESTING A WIND TURBINE BLADE

(51) International classification	:F03D0017000000, G01M0007020000, G01M0005000000, G01N0003320000, F03D0001060000
(31) Priority Document No	:EP20151491
(32) Priority Date	:13/01/2020
(33) Name of priority country	:EPO
(86) International Application No	:NA
Filing Date	:NA
(87) International Publication No	: NA
(61) Patent of Addition to Application Number	:NA
Filing Date	:NA
(62) Divisional to Application Number	:NA
Filing Date	:NA

(71)**Name of Applicant :**
1)SIEMENS GAMESA RENEWABLE ENERGY A/S
Address of Applicant :Borupvej 16, 7330 Brande, Denmark. Denmark
(72)**Name of Inventor :**
1)Christiansen, Soeren

(57) Abstract :
Abstract Test arrangement and method for fatigue testing a wind turbine blade Test arrangement (1, 1™) for fatigue testing a wind turbine blade (2), comprising a floor-mounted test rig (3) having a fixing device (4) for fixing the wind turbine blade (2) to the test rig (3) and an excitation assembly (5) for exciting the wind turbine blade (2) at a test frequency, wherein the test rig (3) comprises a liquid tank (9) having a chamber (10, 10a, 10b) containing a predefined liquid (11), wherein the liquid (11) in the liquid tank (9) has a resonance frequency depending on the amount of liquid (11) in the liquid tank (9) and the chamber geometry. FIG:1

No. of Pages : 22 No. of Claims : 11

(12) PATENT APPLICATION PUBLICATION
(19) INDIA
(22) Date of filing of Application :19/12/2020

(21) Application No.202014055388 A
(43) Publication Date : 16/07/2021

(54) Title of the invention : SELECTIVE CYLINDER DEACTIVATION, PARTICULARLY IN TURBOCHARGED DIESEL ENGINES WITH HIGH POWER DENSITY

(51) International classification	:F02B0003060000, F02B0075220000, F02D0041000000, F02B0075180000, F01L0013000000
(31) Priority Document No	:2000261.4
(32) Priority Date	:09/01/2020
(33) Name of priority country	:U.K.
(86) International Application No	:NA
Filing Date	:NA
(87) International Publication No	: NA
(61) Patent of Addition to Application Number	:NA
Filing Date	:NA
(62) Divisional to Application Number	:NA
Filing Date	:NA

(71)**Name of Applicant :**
1)PERKINS ENGINES COMPANY LIMITED
Address of Applicant :Frank Perkins Way Eastfield Peterborough, Cambridgeshire PE1 5FQ, United Kingdom U.K.
(72)**Name of Inventor :**
1)TURNOCK, Adam D.
2)GILL, Simaranjit S.
3)PARDOE, James E.R.
4)TIMMINS, Nicholas P.

(57) Abstract :
Piston engine exhaust emissions may be reduced at low load or start-up by deactivating the cylinders at opposite ends of the engine block while running some or all of the remaining cylinders in continuous or skip-fire mode. In another aspect, exhaust emissions from a turbocharged diesel engine with a BMEP in excess of 30 bar may be controlled within acceptable limits by deactivating selected cylinders at low load or start-up, even where the compression ratio is 13.5 : 1 or less.

No. of Pages : 20 No. of Claims : 10

(12) PATENT APPLICATION PUBLICATION
(19) INDIA
(22) Date of filing of Application :22/12/2020
(21) Application No.202014055843 A
(43) Publication Date : 16/07/2021

(54) Title of the invention : VEHICLE TRANSMISSION •

(51) International classification :F16H0061220000, F16H0057040000, F16H0059100000, F16D0003205000, F16D0003840000
(31) Priority Document No :2020-002343
(32) Priority Date :09/01/2020
(33) Name of priority country :Japan
(86) International Application No :NA
Filing Date :NA
(87) International Publication No : NA
(61) Patent of Addition to Application Number:NA
Filing Date :NA
(62) Divisional to Application Number :NA
Filing Date :NA

(71)**Name of Applicant :**
1)SUZUKI MOTOR CORPORATION
Address of Applicant :300 Takatsuka-cho, Minami-ku, Hamamatsu-shi, Shizuoka 432-8611, Japan Japan
(72)**Name of Inventor :**
1)Hiroyuki EGUCHI
2)Hiromitsu TAKENAKA

(57) Abstract :
VEHICLE TRANSMISSION • A shift case (73) in a transmission (4) includes a flange portion (74) to be attached to a mounting surface (71) of an opening (70) and a shift case body (75) that bulges from 5 the flange portion (74). The shift case body (75) includes an upper wall (75A) that extends diagonally with respect to the mounting surface (71) from the flange portion (74) and supports a shift-and-select shaft (59) movably in an axial direction and rotatably around an axis line of the shift-and-select shaft (59), a vertical wall (75B) that extends diagonally with respect to the mounting surface (71) from the flange portion (74) and is 10 connected to an upper end in a direction in which the upper wall (75A) extends, a left side wall (75C) that connects a left end portion (75a) of the upper wall (75A), a left end portion (75b) of the upper wall (75A), and the flange portion (74) to one another, and a right side wall (75D) that connects a right end portion (75c) of the upper wall (75A), a right end portion (75c) of the upper wall (75A), and the flange portion (74) to one another. 15 Figure 10

No. of Pages : 76 No. of Claims : 4

(12) PATENT APPLICATION PUBLICATION
(19) INDIA
(22) Date of filing of Application :22/12/2020
(21) Application No.202014055851 A
(43) Publication Date : 16/07/2021

(54) Title of the invention : VEHICLE TRANSMISSION •

(51) International classification	:F16H0061220000, F16H0057040000, F16H0059100000, F16D0003205000, F16D0003840000
(31) Priority Document No	:2020-002342
(32) Priority Date	:09/01/2020
(33) Name of priority country	:Japan
(86) International Application No	:NA
Filing Date	:NA
(87) International Publication No	: NA
(61) Patent of Addition to Application Number	:NA
Filing Date	:NA
(62) Divisional to Application Number	:NA
Filing Date	:NA

(71)**Name of Applicant :**
1)SUZUKI MOTOR CORPORATION
Address of Applicant :300 Takatsuka-cho, Minami-ku, Hamamatsu-shi, Shizuoka 432-8611, Japan Japan
(72)**Name of Inventor :**
1)Hiroyuki EGUCHI
2)Yasuyoshi KOUNAI

(57) Abstract :
VEHICLE TRANSMISSION • A transmission case (5) includes: a first left side wall portion (7C) rotatably supporting a differential device (17); a second left side wall portion (7D) located opposite 5 to the differential device (17) with respect to the first left side wall portion (7C) and provided at a position distanced from the first left side wall portion (7C) in an axial direction of the differential device (17) and rotatably supporting a counter shaft (14); and a third side wall portion (7E) having an opening (7a) and connecting the first left side wall portion (7C) and the second left side wall portion (7D). A shift device (61) is attached to 10 the opening (7a) so as to overlap with the differential device (17) in a direction orthogonal to the axial direction of the differential device (17), and a breather hole is formed in the shift case (62). [Figure 4]

No. of Pages : 54 No. of Claims : 5

(12) PATENT APPLICATION PUBLICATION
(21) Application No.202014055948 A
(19) INDIA
(22) Date of filing of Application :23/12/2020
(43) Publication Date : 16/07/2021

(54) Title of the invention : SUPPORT STRUCTURE OF VEHICLE DRIVING DEVICE •

(51) International classification	:F16H0037080000, H02K0009190000, B60L0050160000, B62J0035000000, F16H0057020000
(31) Priority Document No	:2020-002346
(32) Priority Date	:09/01/2020
(33) Name of priority country	:Japan
(86) International Application No	:NA
Filing Date	:NA
(87) International Publication No	: NA
(61) Patent of Addition to Application Number	:NA
Filing Date	:NA
(62) Divisional to Application Number	:NA
Filing Date	:NA

(71)**Name of Applicant :**
1)SUZUKI MOTOR CORPORATION
Address of Applicant :300 Takatsuka-cho, Minami-ku, Hamamatsu-shi, Shizuoka 432-8611, Japan Japan
(72)**Name of Inventor :**
1)Masahide MIYAZAKI
2)Keiji KITAOKA

(57) Abstract :
SUPPORT STRUCTURE OF VEHICLE DRIVING DEVICE • In a driving device (4), when a transmission case (5) is viewed in an axial direction (from the left) of drive shafts 18L and 18R, an elastic member (65) is installed at a position 5 equal to a distance to the motor (35) from an opening (7c). That is, the motor (35) and the elastic member (65) are installed such that a distance from the opening (7c) to the motor (35) and a distance from the opening (7c) to the elastic member (65) are the same. Figure 1

No. of Pages : 55 No. of Claims : 4

(12) PATENT APPLICATION PUBLICATION
(19) INDIA
(22) Date of filing of Application :23/12/2020
(21) Application No.202014055951 A
(43) Publication Date : 16/07/2021

(54) Title of the invention : VEHICLE TRANSMISSION •

(51) International classification	:F16H0061220000, F16H0057040000, F16H0059100000, F16D0003205000, F16D0003840000
(31) Priority Document No	:2020-002345
(32) Priority Date	:09/01/2020
(33) Name of priority country	:Japan
(86) International Application No	:NA
Filing Date	:NA
(87) International Publication No	: NA
(61) Patent of Addition to Application Number	:NA
Filing Date	:NA
(62) Divisional to Application Number	:NA
Filing Date	:NA

(71)**Name of Applicant :**
1)SUZUKI MOTOR CORPORATION
Address of Applicant :300 Takatsuka-cho, Minami-ku, Hamamatsu-shi, Shizuoka 432-8611, Japan Japan
(72)**Name of Inventor :**
1)Hiromitsu TAKENAKA
2)Hiroyuki EGUCHI

(57) Abstract :
VEHICLE TRANSMISSION • A transmission (4) includes a shift device (72) including a shift case (73) and a shift-and-select shaft (59) that is installed to be movable in an axial direction with respect 5 to the shift case (73) and rotate around an axis line with respect to the shift case (73) and switches a shift range of a transmission mechanism (60). A reverse travel shaft (15) is installed above a counter shaft (14), and is formed to have a shorter axial length than an axial length of the counter shaft (14), and the shift device (72) is installed such that the shift-and-select shaft (59) extends in an up-down direction, and is adjacently arranged in 10 an axial direction of the reverse travel shaft (15). Figure 10

No. of Pages : 71 No. of Claims : 4

(12) PATENT APPLICATION PUBLICATION
(21) Application No.202014055953 A
(19) INDIA
(22) Date of filing of Application :23/12/2020
(43) Publication Date : 16/07/2021

(54) Title of the invention : SHIFT DEVICE FOR VEHICLE TRANSMISSION •

(51) International classification	:F16H0059100000, F16H0059020000, B60K0020020000, B60K0020060000, F16H0061220000	(71)**Name of Applicant :** **1)SUZUKI MOTOR CORPORATION** Address of Applicant :300 Takatsuka-cho, Minami-ku, Hamamatsu-shi, Shizuoka 432-8611, Japan Japan
(31) Priority Document No	:2020-002344	(72)**Name of Inventor :** **1)Hiromitsu TAKENAKA** **2)Hiroyuki EGUCHI**
(32) Priority Date	:09/01/2020	
(33) Name of priority country	:Japan	
(86) International Application No	:NA	
Filing Date	:NA	
(87) International Publication No	: NA	
(61) Patent of Addition to Application Number	:NA	
Filing Date	:NA	
(62) Divisional to Application Number	:NA	
Filing Date	:NA	

(57) Abstract :
SHIFT DEVICE FOR VEHICLE TRANSMISSION • A shift device (61) for a transmission (4) includes a base plate (63) having an inclined surface (63a) extending to be inclined with respect to an axial line (51L) of a shift5 and-select shaft (51) and contacting an outer peripheral edge (7b) of an opening (7a). A through hole (63d) supporting the shift-and-select shaft (51) at a portion closer to an upper end portion (51a) is provided at an upper end portion (63b) of the base plate (63), and a lower protruding portion (67) protruding from another end toward the shift-and-select shaft (51) and supporting the shift-and-select shaft (51) at a portion closer to a lower end portion 10 (51b) is provided at the lower end portion (63c) of the base plate (63). A lower-side portion (51U) of the shift-and-select shaft (51) is installed inside a transmission case (5) (a left case (7)) with the inclined surface (63a) of the base plate (63) being in contact with the outer peripheral edge (7b) of the opening (7a). Figure 2

No. of Pages : 51 No. of Claims : 2

(12) PATENT APPLICATION PUBLICATION
(19) INDIA
(22) Date of filing of Application :23/12/2020
(21) Application No.202014055962 A
(43) Publication Date : 16/07/2021

(54) Title of the invention : ASSIST CONTROL DEVICE •

(51) International classification	:B60T0008320000, B60T0008480000, G11C0005140000, B60T0007120000, B62D0015020000
(31) Priority Document No	:2020-003954
(32) Priority Date	:14/01/2020
(33) Name of priority country	:Japan
(86) International Application No	:NA
Filing Date	:NA
(87) International Publication No	: NA
(61) Patent of Addition to Application Number	:NA
Filing Date	:NA
(62) Divisional to Application Number	:NA
Filing Date	:NA

(71)**Name of Applicant :**
1)SUZUKI MOTOR CORPORATION
Address of Applicant :300 Takatsuka-cho, Minami-ku, Hamamatsu-shi, Shizuoka 432-8611, Japan Japan
(72)**Name of Inventor :**
1)Ryo TSUSHIMA

(57) Abstract :
There is provided an assist control device that makes it possible to enhance the 5 start performance and acceleration performance at a steep gradient while reducing the heat generation of a clutch. [Solution] An assist control device is an assist control device of a hybrid vehicle (1) including: an engine (2); a transmission (3) that shifts rotation of the engine (2) and 10 transmits the rotation to a driving wheel (5); a clutch (26) that disconnects or connects a motive power transmission path between the transmission (3) and the engine (2); and a motor generator (4) that can transmit motive power to the driving wheel (5), and includes an HCU (10) that executes a climbing assist control when an execution condition is satisfied, the climbing assist control being a control by which a climbing assist torque is 15 output from the motor generator (4) to the driving wheel (5), the execution condition being that a road surface is on a climbing road having a gradient equal to or more than a predetermined gradient, the clutch (26) is in a decoupled state including a half-engagement state, and there is no request for gear shift, in which the HCU (10) stops the climbing assist control when the clutch (26) transitions from the decoupled state to a coupled state. 20 [Selected Figure] Figure 3

No. of Pages : 45 No. of Claims : 6

(12) PATENT APPLICATION PUBLICATION
(19) INDIA
(22) Date of filing of Application :23/12/2020

(21) Application No.202014056133 A
(43) Publication Date : 16/07/2021

(54) Title of the invention : SYSTEM AND METHOD FOR THE METERING OF A LIQUID OR GASEOUS MEDIUM

(51) International classification	:G01F0001684000, G05D0011130000, F04B0049020000, F04B0043000000, F04B0049060000
(31) Priority Document No	:20151555.8
(32) Priority Date	:13/01/2020
(33) Name of priority country	:EPO
(86) International Application No	:NA
Filing Date	:NA
(87) International Publication No	: NA
(61) Patent of Addition to Application Number	:NA
Filing Date	:NA
(62) Divisional to Application Number	:NA
Filing Date	:NA

(71)**Name of Applicant :**
1)PROMIX SOLUTIONS AG
Address of Applicant :Technoparkstrasse 2 8406 Winterthur, Switzerland Switzerland
(72)**Name of Inventor :**
1)SCHLUMMER, Christian

(57) Abstract :
A system (1) for metering a liquid or gaseous medium comprises a pressure control valve (4) and a flow sensor, the pressure control valve (4) and the flow sensor forming a closed control circuit (6). The required metering quantity can be adjusted by controlling the metering pressure (p2) by means of the pressure control valve (4). (Fig. 1)

No. of Pages : 23 No. of Claims : 10

(12) PATENT APPLICATION PUBLICATION
(19) INDIA
(22) Date of filing of Application :30/12/2020

(21) Application No.202014057100 A
(43) Publication Date : 16/07/2021

(54) Title of the invention : NEUTRAL ELECTRODE AND METHOD FOR THE FORMATION THEREOF

(51) International classification	:A61B0018160000, A61B0018120000, A61B0005040800, A61B0005041600, A61B0005042400
(31) Priority Document No	:20151509.5
(32) Priority Date	:13/01/2020
(33) Name of priority country	:EUROPEAN UNION
(86) International Application No	:NA
Filing Date	:NA
(87) International Publication No	: NA
(61) Patent of Addition to Application Number	:NA
Filing Date	:NA
(62) Divisional to Application Number	:NA
Filing Date	:NA

(71)**Name of Applicant :**
1)ERBE ELEKTROMEDIZIN GMBH
Address of Applicant :Waldhoernlestrasse 17, 72072 Tuebingen, Germany Germany
(72)**Name of Inventor :**
1)FELSTEAD Marcus
2)WULFF Erik

(57) Abstract :
An inventive neutral electrode (12) is formed on the patient (11) in that an electrically conductible mass that can solidify is applied on the skin of the patient (11) that is electrically conductible. An electrically conductible inlay (17) can be arranged on or embedded in the forming electrode body (16) prior, during or after the application of the mass, the inlay (17) is or can be connected with the neutral electrode connection cable (13). The inlay (17) serves to electrically contact the electrode body (16) in a large area that in turn establishes a reliable electrical contact to the patient (11). (Figure 1)

No. of Pages : 25 No. of Claims : 15

(12) PATENT APPLICATION PUBLICATION
(21) Application No.202017040178 A
(19) INDIA
(22) Date of filing of Application :16/09/2020
(43) Publication Date : 16/07/2021

(54) Title of the invention : LIQUID TRANSFER DEVICE WITH DUAL LUMEN IV SPIKE

(51) International classification	:A61J0001200000, A61M0005162000, A61M0039100000, A61J0001140000, A61J0001100000
(31) Priority Document No	:62/840620
(32) Priority Date	:30/04/2019
(33) Name of priority country	:U.S.A.
(86) International Application No	:PCT/IL2020/050048
Filing Date	:13/01/2020
(87) International Publication No	:WO 2020/222220
(61) Patent of Addition to Application Number	:NA
Filing Date	:NA
(62) Divisional to Application Number	:NA
Filing Date	:NA

(71)**Name of Applicant :**
1)WEST PHARMA. SERVICES IL, LTD.
Address of Applicant :4 Hasheizaf St. 4366411 Ra'anana Israel
(72)**Name of Inventor :**
1)BAR-EL, Yossi
2)FABRIKANT, Elisheva
3)BEN SHALOM, Niv

(57) Abstract :
A liquid transfer device includes a monolithic trifurcated connector body defining a barrel at a first end thereof, a single IV spike at a second end thereof and a vial adapter lumen at a third end thereof. An IV port is connected to the barrel. The single IV spike has a first IV spike lumen fluidly connected at a proximal end thereof with only the vial adapter lumen via the trifurcated connector body and a second IV spike lumen fluidly connected at a proximal end thereof with only the IV port via the trifurcated connector body, thereby separating fluid communication between the vial adapter and the single IV spike from fluid communication between the IV port and the single IV spike.

No. of Pages : 14 No. of Claims : 13

(12) PATENT APPLICATION PUBLICATION
(19) INDIA
(22) Date of filing of Application :21/09/2020
(21) Application No.202017040756 A
(43) Publication Date : 16/07/2021

(54) Title of the invention : LITHIUM ELECTRODE AND LITHIUM SECONDARY BATTERY COMPRISING SAME

(51) International classification	:H01M 4/134, H01M 4/1395, H01M 4/04, H01M 10/0569, H01M 10/052
(31) Priority Document No	:10-2019-0003695
(32) Priority Date	:11/01/2019
(33) Name of priority country	:Republic of Korea
(86) International Application No	:PCT/KR2020/000527
Filing Date	:10/01/2020
(87) International Publication No	:WO 2020/145753
(61) Patent of Addition to Application Number	:NA
Filing Date	:NA
(62) Divisional to Application Number	:NA
Filing Date	:NA

(71)**Name of Applicant :**
1)LG CHEM, LTD.
Address of Applicant :128, Yeoui-daero, Yeongdeungpo-gu, Seoul 07336 Republic of Korea
(72)**Name of Inventor :**
1)YOUN, Suk Il
2)SON, Byoungkuk
3)CHOI, Junghun
4)JANG, Minchul

(57) Abstract :
The present invention relates to a lithium electrode and a lithium secondary battery comprising same and, more specifically, to a lithium electrode in which an acrylic polymer layer is formed on a lithium metal layer, the acrylic polymer layer performing a function as a protective layer for the lithium metal layer and a function as a release layer in the manufacturing process of the lithium electrode, wherein in the lithium secondary battery comprising the lithium electrode, the acrylic polymer layer shows an effect of not acting as an resistor in the driving of the battery.

No. of Pages : 20 No. of Claims : 13

(12) PATENT APPLICATION PUBLICATION
(19) INDIA
(22) Date of filing of Application :29/10/2020
(21) Application No.202017047283 A
(43) Publication Date : 16/07/2021

(54) Title of the invention : HUMANIZED BCMA ANTIBODY AND BCMA-CAR-T CELLS

(51) International classification	:C07K0014725000, C07K0014705000, A61K0035170000, C12N0005078300, C07K0016280000
(31) Priority Document No	:62/793274
(32) Priority Date	:16/01/2019
(33) Name of priority country	:U.S.A.
(86) International Application No	:PCT/US2020/013662
Filing Date	:15/01/2020
(87) International Publication No	:WO 2020/150339
(61) Patent of Addition to Application Number	:NA
Filing Date	:NA
(62) Divisional to Application Number	:NA
Filing Date	:NA

(71)**Name of Applicant :**
1)CARIBOU BIOSCIENCES, INC.
Address of Applicant :2929 7th Street, Suite 105 Berkeley, California 94710 U.S.A.
(72)**Name of Inventor :**
1)WU, Lijun
2)GOLUBOVSKAYA, Vita

(57) Abstract :
The present invention is directed to a humanized BCMA single-chain variable fragment (scFv), comprising VH having the amino acid sequence of SEQ ID NO: 3 and VL having the amino acid sequence of SEQ ID NO: 5. The present invention is also directed to a BCMA chimeric antigen receptor fusion protein comprising from N-terminus to C-terminus: (i) a single-chain variable fragment (scFv) of the present invention, (ii) a transmembrane domain, (iii) at least one co-stimulatory domains, and (iv) an activating domain. This humanized BCMA-CAR-T cells have specific killing activity against BCMA-positive tumor cells.

No. of Pages : 15 No. of Claims : 11

(12) PATENT APPLICATION PUBLICATION
(19) INDIA
(22) Date of filing of Application :18/11/2020
(21) Application No.202017050281 A
(43) Publication Date : 16/07/2021

(54) Title of the invention : APPARATUS FOR DETECTING WEARING OF BODY PROTECTION GEAR

(51) International classification	:A42B0003080000, H03K0017960000, B60L0053650000, A42B0003320000, B60L0050520000
(31) Priority Document No	:2019-003921
(32) Priority Date	:12/01/2019
(33) Name of priority country	:Japan
(86) International Application No	:PCT/JP2020/000520
Filing Date	:09/01/2020
(87) International Publication No	:WO 2020/145362
(61) Patent of Addition to Application Number	:NA
Filing Date	:NA
(62) Divisional to Application Number	:NA
Filing Date	:NA

(71)**Name of Applicant :**
1)HERUTU ELECTRONICS CORPORATION
Address of Applicant :422-1 Higashimikata-cho, Kita-ku, Hamamatsu, Shizuoka, 433-8104 Japan Japan
(72)**Name of Inventor :**
1)FUJIWARA Yuya
2)OKADA Shinichi

(57) Abstract :
Provided is an apparatus for detecting the wearing of body protection gear, which is capable of accurately detecting the proximity or contact of a human head using multiple contact-detecting sensors. The apparatus 100 for detecting the wearing of body protection gear is provided with a headband contact-detecting sensor 110 and a chin strap contact-detecting sensor 120 that are respectively set on a headband 92 and a chin strap 94 of a helmet 90. The headband contact-detecting sensor 110 and the chin strap contact-detecting sensor 120 are connected to a control unit 103 of a detector body 101. When one of the two contact-detecting sensors, i.e. the headband contact-detecting sensor 110 and the chin strap contact-detecting sensor 120, is outputting a contact detection signal to the control unit 103, the control unit 103 connects the other contact-detecting sensor to GND. FIG. 1

No. of Pages : 48 No. of Claims : 10

(12) PATENT APPLICATION PUBLICATION
(21) Application No.202017051349 A
(19) INDIA
(22) Date of filing of Application :25/11/2020
(43) Publication Date : 16/07/2021

(54) Title of the invention : ENCAPSULATION STRUCTURE WITH EXPOSED HIGH-DENSITY MULTI-SIDED PINS AND PRODUCTION METHOD THEREFOR

(51) International classification	:H01L0023000000, H01L0023310000, H01L0023495000, H01L0021560000, C22C0038060000
(31) Priority Document No	:201910656493.7
(32) Priority Date	:19/07/2019
(33) Name of priority country	:China
(86) International Application No	:PCT/CN2020/071108
Filing Date	:09/01/2020
(87) International Publication No	:WO 2021/012641
(61) Patent of Addition to Application Number	:NA
Filing Date	:NA
(62) Divisional to Application Number	:NA
Filing Date	:NA

(71)**Name of Applicant :**
1)GUANGDONG CHIPPACKING TECHNOLOGY CO., LTD.
Address of Applicant :Qipai Building Qipai Technology Road, Shipai Town Dongguan, Guangdong 523330 China
(72)**Name of Inventor :**
1)RAO, Xilin
2)WEN, Zhengguo
3)YANG, Jianwei
4)HUANG, Yiwei
5)SI, Yiping
6)LIU, Fangbiao

(57) Abstract :
An encapsulation structure with exposed high-density multi-sided pins and a production method therefor. The encapsulation structure comprises a body (10), a base island (20) and pins (30), wherein the base island (20) and the pins (30) are arranged at the bottom of the body (10), a bottom surface of each pin (30) is exposed to a bottom surface of the body (10), and the pins (30) extend to multiple sides of the body (10) and out of the body (10). The body (10) comprises an integrated circuit (11), arranged on the base island (20) and connected to the pins (30), and a plastic encapsulation body (12), used for encapsulating the integrated circuit (11), the base island (20) and the pins (30), wherein a bottom surface of the plastic encapsulation body (12) and the bottom surface of the pins (30) are on the same horizontal plane; and the pins (30) comprise a first pin (31) isolated from the base island (20). The thickness and volume of an encapsulation structure can be reduced, and the internal resistance and thermal resistance of encapsulation can be reduced, thereby improving the product performance and reliability, and also increasing the application range thereof.

No. of Pages : 20 No. of Claims : 10

(12) PATENT APPLICATION PUBLICATION
(19) INDIA
(22) Date of filing of Application :01/12/2020
(21) Application No.202017052407 A
(43) Publication Date : 16/07/2021

(54) Title of the invention : DEBLOCKING FILTER FOR SUB-PARTITION BOUNDARIES CAUSED BY INTRA SUB-PARTITION CODING TOOL

(51) International classification	:H04N0019176000, H04N0019593000, H04N0019610000, H04N0019110000, H04N0019820000
(31) Priority Document No	:62/791003
(32) Priority Date	:10/01/2019
(33) Name of priority country	:U.S.A.
(86) International Application No	:PCT/CN2020/071272
Filing Date	:10/01/2020
(87) International Publication No	:WO 2020/143729
(61) Patent of Addition to Application Number	:NA
Filing Date	:NA
(62) Divisional to Application Number	:NA
Filing Date	:NA

(71)**Name of Applicant :**
1)HUAWEI TECHNOLOGIES CO., LTD.
Address of Applicant :Huawei Administration Building, Bantian, Longgang District Shenzhen, Guangdong 518129 China
(72)**Name of Inventor :**
1)WANG, Biao
2)KOTRA, Anand Meher
3)ESENLIK, Semih
4)GAO, Han
5)CHEN, Jianle

(57) Abstract :
It is provided a deblocking method, for deblocking a sub-partitions boundary within a coding block in an image encoding and/or an image decoding, wherein the current coding block is coded in intra prediction mode and the current coding block is partitioned into sub-partitions comprising a first sub-partition and a second sub-partition which is adjacent to the first sub-partition; wherein the method comprises: determining a maximum filter length to be 1 for a first/second sub-partition when a width of the first or second sub-partition is 4 samples, or when a height of the first or second sub-partition is 4 samples; modifying a value of up to one sample of the first or second sub-partition, wherein the up to one sample is obtained from a row or column of the first or second sub-partition that is perpendicular to and adjacent to the sub-partitions boundary between the first sub-partition and the second sub-partition. The present disclosure allows for modifying a small number of sample values at the sub-partition boundary, and therefore the method can reduce the block artifact that might be caused by sub-partition boundaries in the current coding block applied with an Intra sub-partition, ISP, tool.

No. of Pages : 68 No. of Claims : 31

(12) PATENT APPLICATION PUBLICATION
(21) Application No.202114000267 A
(19) INDIA
(22) Date of filing of Application :04/01/2021
(43) Publication Date : 16/07/2021

(54) Title of the invention : METHOD AND APPARATUS FOR SEPARATING A SYNTHESIS GAS BY CRYOGENIC DISTILLATION

(51) International classification	:F25J0003020000, C01B0003500000, C10G0002000000, F25J0003060000, B01D0053000000	(71)**Name of Applicant :** **1)L'AIR LIQUIDE SOCIETE ANONYME POUR L'ETUDE ET L'EXPLOITATION DES PROCEDES GEORGES CLAUDE** Address of Applicant :75, Quai d'Orsay, 75007 PARIS, France France
(31) Priority Document No	:EP20151738	(72)**Name of Inventor :**
(32) Priority Date	:14/01/2020	**1)LE GULUDEC Erwan**
(33) Name of priority country	:EPO	**2)HERNANDEZ Antoine**
(86) International Application No	:NA	**3)TEIXEIRA Guillaume**
Filing Date	:NA	**4)DAVIDIAN Benoit**
(87) International Publication No	: NA	**5)LINICUS Matthias**
(61) Patent of Addition to Application Number	:NA	
Filing Date	:NA	
(62) Divisional to Application Number	:NA	
Filing Date	:NA	

(57) Abstract :
Abstract Method and apparatus for separating a synthesis gas by cryogenic distillation In a process for separating a mixture (3) containing carbon monoxide, hydrogen and carbon dioxide, the mixture cooled in a heat exchanger (9) is contacted by a stream of liquid methanol (13) at a temperature below40°C to produce carbon dioxide enriched methanol (17) and a carbon dioxide depleted gas (15) relative to the cooled mixture, the carbon dioxide depleted gas is cooled in the heat exchanger and is sent to a separation unit (7) to produce a carbon monoxide enriched stream (18) and a hydrogen enriched stream (19) and the streams enriched in carbon monoxide and hydrogen are heated in the heat exchanger by exchanging heat with the mixture. Figure 1

No. of Pages : 18 No. of Claims : 15

(12) PATENT APPLICATION PUBLICATION
(19) INDIA
(22) Date of filing of Application :04/01/2021
(21) Application No.202114000286 A
(43) Publication Date : 16/07/2021

(54) Title of the invention : FASTENING CLIP WITH VISUAL SEAL

(51) International classification	:E01B0009300000, F16B0021080000, F16B0005120000, B65B0051040000, B60R0013020000
(31) Priority Document No	:62/959,227
(32) Priority Date	:10/01/2020
(33) Name of priority country	:U.S.A.
(86) International Application No	:NA
Filing Date	:NA
(87) International Publication No	: NA
(61) Patent of Addition to Application Number	:NA
Filing Date	:NA
(62) Divisional to Application Number	:NA
Filing Date	:NA

(71)**Name of Applicant :**
1)ILLINOIS TOOL WORKS INC.
Address of Applicant :155 Harlem Avenue Glenview, Illinois 60025, United States of America U.S.A.
(72)**Name of Inventor :**
1)IMAZU, Norikaze
2)ZANDER, Jason, M.

(57) Abstract :
A fastening clip is provided for fastening to one or more support structures. The fastening clip includes a clip body and a seal. The seal is disposed around a 5 peripheral edge of the clip body and includes a first end and a sealing foot, the first end engaging the clip body, the sealing foot projecting from the first end to a second end such that the second end is disposed radially outwardly from the first end, and the second end being radially aligned with or disposed radially inwardly from the peripheral edge of the collar in an uninstalled configuration. In an 10 installed configuration, the circumferential seal is configured to flex against a support structure in response to applied pressure between the seal and the support structure so that the second end is disposed radially outwardly from the peripheral edge of the collar.

No. of Pages : 28 No. of Claims : 20

(12) PATENT APPLICATION PUBLICATION
(19) INDIA
(22) Date of filing of Application :07/01/2021
(21) Application No.202114000689 A
(43) Publication Date : 16/07/2021

(54) Title of the invention : VORTEX TUBE, VENTILATION SYSTEM AND ELEVATOR

(51) International classification	:F25B0009040000, B66B0005000000, B66B0005020000, A61M0016200000, B66B0003000000	(71)**Name of Applicant :** **1)KONE Corporation** Address of Applicant :Kartanontie 1, 00330 HELSINKI, Finland Finland
(31) Priority Document No	:20150996.5	(72)**Name of Inventor :** **1)GOPALA KRISHNAN, Ramprasad**
(32) Priority Date	:09/01/2020	**2)GANESAN, Selvadurai**
(33) Name of priority country	:EPO	
(86) International Application No	:NA	
Filing Date	:NA	
(87) International Publication No	: NA	
(61) Patent of Addition to Application Number	:NA	
Filing Date	:NA	
(62) Divisional to Application Number	:NA	
Filing Date	:NA	

(57) Abstract :
The invention relates to a vortex tube (5) comprising a first end (5a) provided with a first outlet (7); a second end (5b) provided with a second outlet (8); a vortex generating chamber (6a) between the first end and the second end (5a,5b); an air inlet (9) leading from a side of the vortex tube (5) into the vortex generating chamber (6a); a first flow passage (6b) between the vortex generating chamber (6a) and the first outlet (7); a second flow passage (6c) between the first flow passage (6b) and the second outlet (8). The vortex tube (5) comprises one or more air guides (10,10™) disposed inside the vortex tube (5) downstream of the vortex generating chamber (6c) for increasing laminarity of air flow downstream of the vortex generating chamber (6c), wherein one or more of said air guides (10,10™) is an air guide (10,10™) comprising plurality of openings (11,11™), through which openings (11,11™) air can flow. The invention also relates to a ventilating system and an elevator implementing said vortex tube (5)

No. of Pages : 28 No. of Claims : 18

(12) PATENT APPLICATION PUBLICATION
(19) INDIA
(22) Date of filing of Application :07/01/2021
(21) Application No.202114000771 A
(43) Publication Date : 16/07/2021

(54) Title of the invention : TRANSAXLE

(51) International classification	:F16H0057040000, F16H0048080000, B60K0017160000, F16H0048100000, F16H0057080000
(31) Priority Document No	:2020-002139
(32) Priority Date	:09/01/2020
(33) Name of priority country	:Japan
(86) International Application No	:NA
Filing Date	:NA
(87) International Publication No	: NA
(61) Patent of Addition to Application Number	:NA
Filing Date	:NA
(62) Divisional to Application Number	:NA
Filing Date	:NA

(71)**Name of Applicant :**
1)TOYOTA JIDOSHA KABUSHIKI KAISHA
Address of Applicant :1, Toyota-cho, Toyota-shi, Aichi-ken, 471-8571, Japan Japan
(72)**Name of Inventor :**
1)Akira HIBINO
2)Takahiro SHIINA

(57) Abstract :
ABSTRACT TRANSAXLE A transaxle includes a planetary gear reducer (40) and a differential device (80). The planetary gear reducer (40) includes a stepped pinion, a first needle bearing, a second needle bearing, and a carrier. The stepped pinion includes a pinion shaft with which a large diameter pinion and a small diameter pinion are integrated. The first needle bearing is fitted to a part of the pinion shaft outside the large diameter pinion. The second needle bearing is fitted to a part of the pinion shaft outside the small diameter pinion. The carrier is configured to support the stepped pinion via the first needle bearing and the second needle bearing such that the stepped pinion is rotatable with respect to the carrier, and to couple the stepped pinion and the differential device (80).
Selected Drawing: FIG. 1

No. of Pages : 29 No. of Claims : 8

(12) PATENT APPLICATION PUBLICATION
(19) INDIA
(22) Date of filing of Application :11/01/2021

(21) Application No.202114001129 A
(43) Publication Date : 16/07/2021

(54) Title of the invention : POLYMERS AND LUBRICATING COMPOSITIONS CONTAINING POLYMERS

(51) International classification	:A61K0047380000, C08F0008140000, C08F0008480000, C10M0143120000, C08G0079040000
(31) Priority Document No	:20152066.5
(32) Priority Date	:15/01/2020
(33) Name of priority country	:EPO
(86) International Application No	:NA
Filing Date	:NA
(87) International Publication No	: NA
(61) Patent of Addition to Application Number	:NA
Filing Date	:NA
(62) Divisional to Application Number	:NA
Filing Date	:NA

(71)**Name of Applicant :**
1)INFINEUM INTERNATIONAL LIMITED
Address of Applicant :P.O. Box 1, Milton Hill, Abingdon, Oxfordshire OX13 6BB, United Kingdom U.K.
(72)**Name of Inventor :**
1)PHILLIPS, Daniel James
2)SCHWARZ, Andrew Douglas
3)STRONG, Anthony James
4)CATTOZ, Beatrice Nicole
5)BECER, Remzi
6)BEYER, Valentin
7)KIM, Jungyeon

(57) Abstract :
A polymer comprising units having the structure (I): (I) wherein x is 2 or 3, wherein L is (CH2)y, where y is an integer from 1 to 10, or wherein L is CH(CH3)CH2S(CH2)z, where z is an integer from 1 to 5; wherein [Q] is absent or is a polymerised moiety consisting of units having the structure (II): (II) wherein R is a hydrocarbyl group, or a hydrocarbyl group containing one or more heteroatoms, wherein R may be linear, branched or cyclic, saturated or unsaturated, and wherein R has from 1 to 30 carbon atoms; wherein [Q] either consists of identical units of structure (II), or wherein [Q] consists of more than one different units of structure (II), differing in group R; and wherein X is a halogen or another chain terminating group. The polymers may find use as additives in lubricating compositions where they provide friction improvement and wear reduction.

No. of Pages : 44 No. of Claims : 16

(12) PATENT APPLICATION PUBLICATION
(19) INDIA
(22) Date of filing of Application :11/01/2021
(21) Application No.202114001184 A
(43) Publication Date : 16/07/2021

(54) Title of the invention : SEPARATING LAYER FOR THE TRANSPORT OF PHARMACEUTICAL SECONDARY PACKAGINGS

(51) International classification	:A61K0009500000, B29C0065000000, H01M0008023200, C01B0013020000, B01D0069120000	(71)**Name of Applicant :** **1)SCHOTT Schweiz AG** Address of Applicant :St. Josefen-Str. 20, 9001 St. Gallen (CH) Switzerland
(31) Priority Document No	:20151303.3	(72)**Name of Inventor :**
(32) Priority Date	:10/01/2020	**1)WOLF, Patrick**
(33) Name of priority country	:EPO	**2)KLOKE, Arne**
(86) International Application No	:NA	**3)WIESNER, Elisa**
Filing Date	:NA	
(87) International Publication No	: NA	
(61) Patent of Addition to Application Number	:NA	
Filing Date	:NA	
(62) Divisional to Application Number	:NA	
Filing Date	:NA	

(57) Abstract :
The invention relates to a special separating layer for the transport of pharmaceutical secondary packagings and to a transport system for transporting pharmaceutical secondary packagings which comprises the special separating layer.

No. of Pages : 45 No. of Claims : 16

(12) PATENT APPLICATION PUBLICATION
(21) Application No.202114001397 A
(19) INDIA
(22) Date of filing of Application :12/01/2021
(43) Publication Date : 16/07/2021

(54) Title of the invention : PRE-ASSEMBLY PLANT FOR PHOTOVOLTAIC SOLAR TRACKERS AND PRE-ASSEMBLY METHOD ASSOCIATED WITH SAID PLANT

(51) International classification	:F24S0025100000, H02S0020320000, F24S0030000000, F28D0021000000, H02S0020000000	(71)**Name of Applicant :** **1)ESASOLAR ENERGY SYSTEM, S.L.** Address of Applicant :CALLE SANTA ENGRACIA, 90-PLANTA 4- 28010- MADRID, SPAIN Spain
(31) Priority Document No	:P202030014	(72)**Name of Inventor :** **1)MALDONADO FERREIRA, JOS‰ ANTONIO**
(32) Priority Date	:14/01/2020	
(33) Name of priority country	:Spain	
(86) International Application No	:NA	
Filing Date	:NA	
(87) International Publication No	: NA	
(61) Patent of Addition to Application Number	:NA	
Filing Date	:NA	
(62) Divisional to Application Number	:NA	
Filing Date	:NA	

(57) Abstract :
The invention relates to a pre-assembly plant (1) for the pre-assembly of units (2) of a solar tracker, wherein said units (2) comprise a set of photovoltaic panels (3) arranged on a structure formed by a main shaft (4) and a plurality of purlins (5). Said plant (1) advantageously comprises a conveyance line (7, 7™) for conveying components of the units (2), in the proximity of which at least the following pre-assembly sections are arranged: a section equipped with receiving means for receiving components of the units (2), and an unloading area (8) thereof; a fitting section (10) for fitting the purlins (5) to the shafts (4); an installation section (12) for installing photovoltaic panels (3) on the purlins (5); and a finishing section for the pre-assembly of the units (2) and for the stockpiling (13) thereof in support structures (13™). The invention likewise relates to a pre-assembly method for the pre-assembly of units (2) comprising the use of said plant (1).

No. of Pages : 30 No. of Claims : 15

(12) PATENT APPLICATION PUBLICATION
(19) INDIA
(22) Date of filing of Application :13/01/2021
(21) Application No.202114001554 A
(43) Publication Date : 16/07/2021

(54) Title of the invention : WIRELESS CHARGER

(51) International classification	:H02J0007020000, H05K0007200000, H02J0007000000, B60R0021233000, F04D0025060000
(31) Priority Document No	:202010037378.4
(32) Priority Date	:14/01/2020
(33) Name of priority country	:China
(86) International Application No	:NA
Filing Date	:NA
(87) International Publication No	: NA
(61) Patent of Addition to Application Number	:NA
Filing Date	:NA
(62) Divisional to Application Number	:NA
Filing Date	:NA

(71)**Name of Applicant :**
1)GUANGDONG OPPO MOBILE TELECOMMUNICATIONS CORP., LTD.
Address of Applicant :NO. 18, HAIBIN ROAD, WUSHA, CHANG'AN, DONGGUAN, GUANGDONG 523860, CHINA China
(72)**Name of Inventor :**
1)YANG, JUN

(57) Abstract :
A wireless charger is provided. The wireless charger includes a housing (100), a baffle (500), a circuit board (300), and a fan (400). The housing (100) defines a mounting cavity (101), a first vent (103), and a second vent (105). The baffle (500) divides the mounting cavity (101) into a first chamber (101a) and a second chamber (101b). The circuit board (300) is disposed in the mounting cavity (101) and electrically connected to the coil module (200). The fan (400) is disposed in the first chamber (101a) and configured to guide air to flow into the first chamber (101a) from one of the first vent (103) and the second vent (105) and guide the air to flow out of the first chamber (101a) from the other of the first vent (103) and the second vent (105).

No. of Pages : 29 No. of Claims : 13

(12) PATENT APPLICATION PUBLICATION
(21) Application No.202114001710 A
(19) INDIA
(22) Date of filing of Application :13/01/2021
(43) Publication Date : 16/07/2021

(54) Title of the invention : MOBILE RECONFIGURABLE MODULAR ELECTRONIC FREIGHT TERMINAL AND FREIGHT CONTAINER MODULE THEREOF

(51) International classification	:G06Q0010080000, B65D0090000000, G06Q0050280000, B01L0009000000, B60P0007130000
(31) Priority Document No	:202010036214.X
(32) Priority Date	:14/01/2020
(33) Name of priority country/region	:Taiwan
(86) International Application No	:NA
Filing Date	:NA
(87) International Publication No	: NA
(61) Patent of Addition to Application Number	:NA
Filing Date	:NA
(62) Divisional to Application Number	:NA
Filing Date	:NA

(71)**Name of Applicant :**
1)Mintron Energy Technology Co., Ltd.
Address of Applicant :2F.-1, No. 268, Sec. 1, Gaotiezhanqian W. Rd., Zhongli Dist., Taoyuan City 320, Taiwan.
(72)**Name of Inventor :**
1)HUANG, Chen-Sheng
2)CHUANG, Chia-Ming

(57) Abstract :
Disclosed is a unmanned handling unit for a reconfigurable decentralized shipping system, wherein a shipper first selects a freight container module of one of a plurality of sizes to pack at least one item, and then ships it to a predetermined target; the shipper inputs shipping information to the shipping system; when the shipper and/or the predetermined target modifies the shipping information, delivery is modified in real time. The reconfigurable decentralized shipping system includes a plurality of transport means operating in respective operating areas and configured with at least one unmanned handling unit, each of the operating areas including a plurality of freight terminal staging points and at least intersected with at least another one of the operating areas; the unmanned handling unit includes: a chassis including a load carrier having at least two wheels for bearing the freight terminal, and a plurality of action actuation means respectively for driving the wheels; a retractable assisted platform that is retractable relative to the chassis, the retractable assisted platform including a corpus provided with a group of transfer means for transferring the freight terminal a corpus and a group of freight container module pickup and delivery means, and a retractable driving means configured to drive the corpus.

No. of Pages : 59 No. of Claims : 10

(12) PATENT APPLICATION PUBLICATION
(19) INDIA
(22) Date of filing of Application :15/01/2021
(21) Application No.202114001982 A
(43) Publication Date : 16/07/2021

(54) Title of the invention : GEMSTONE AND METHODS OF CUTTING THE SAME

(51) International classification	:A44C0017000000, A41C0001000000, G06T0007620000, C30B0029600000, F02M0061180000	(71)**Name of Applicant :** **1)Albert Gad Ltd.** Address of Applicant :12 East 49th Street, 39th Floor, New York, New York 10017, USA U.S.A. (72)**Name of Inventor :** **1)Reuven Paikin**
(31) Priority Document No	:62/961,607	
(32) Priority Date	:15/01/2020	
(33) Name of priority country	:U.S.A.	
(86) International Application No	:NA	
Filing Date	:NA	
(87) International Publication No	: NA	
(61) Patent of Addition to Application Number	:NA	
Filing Date	:NA	
(62) Divisional to Application Number	:NA	
Filing Date	:NA	

(57) Abstract :
ABSTRACT GEMSTONE AND METHODS OF CUTTING THE SAME A gemstone includes a crown, a pavilion, and a girdle disposed between the crown and the pavilion. The girdle has an elliptical cross-section with a major axis and a minor axis. The surface of the gemstone is generally divided into a number of groups of interlocking facets disposed at a variety of angles. The groups of facets comprising the surface of the crown generally include star facets, upper intermediate crown facets, lower intermediate crown facets, main crown facets, and upper girdle facets. The upper girdle facets generally abut an upper edge of the girdle. The groups of facets comprising the surface of the pavilion include culet-adjacent facets, candle facets, main pavilion facets, and lower girdle facets. The lower girdle facets generally abut a lower edge of the girdle.

No. of Pages : 72 No. of Claims : 32

(12) PATENT APPLICATION PUBLICATION
(19) INDIA
(22) Date of filing of Application :15/01/2021
(21) Application No.202114001984 A
(43) Publication Date : 16/07/2021

(54) Title of the invention : GEMSTONE AND METHODS OF CUTTING THE SAME

(51) International classification	:A44C0017000000, A41C0001000000, G06T0007620000, C30B0029600000, F02M0061180000
(31) Priority Document No	:62/961,577
(32) Priority Date	:15/01/2020
(33) Name of priority country	:U.S.A.
(86) International Application No	:NA
Filing Date	:NA
(87) International Publication No	: NA
(61) Patent of Addition to Application Number	:NA
Filing Date	:NA
(62) Divisional to Application Number	:NA
Filing Date	:NA

(71)**Name of Applicant :**
1)Albert Gad Ltd.
Address of Applicant :12 East 49th Street, 39th Floor, New York, New York 10017, USA U.S.A.
(72)**Name of Inventor :**
1)Reuven Paikin

(57) Abstract :
ABSTRACT GEMSTONE AND METHODS OF CUTTING THE SAME A gemstone includes a crown, a pavilion, and a girdle disposed between the crown and the pavilion. The girdle has an elliptical cross-section with a major axis and a minor axis. The surface of the gemstone is generally divided into a number of groups of interlocking facets disposed at a variety of angles. The groups of facets comprising the surface of the crown generally include star facets, upper intermediate crown facets, lower intermediate crown facets, main crown facets, and upper girdle facets. The upper girdle facets generally abut an upper edge of the girdle. The groups of facets comprising the surface of the pavilion include culet-adjacent facets, candle facets, main pavilion facets, and lower girdle facets. The lower girdle facets generally abut a lower edge of the girdle.

No. of Pages : 73 No. of Claims : 33

(12) PATENT APPLICATION PUBLICATION
(19) INDIA
(22) Date of filing of Application :22/02/2021

(21) Application No.202117007334 A
(43) Publication Date : 16/07/2021

(54) Title of the invention : DRY PLANT POWDER HAVING ENHANCED SWEET FLAVOR, AND FOOD/BEVERAGE ITEM

(51) International classification	:A61K0047200000, H01L0023290000, A23L0029219000, A23L0005100000, A61K0031100000
(31) Priority Document No	:2019-019921
(32) Priority Date	:06/02/2019
(33) Name of priority country	:Japan
(86) International Application No	:PCT/JP2020/000615
Filing Date	:10/01/2020
(87) International Publication No	:WO 2020/162100
(61) Patent of Addition to Application Number	:NA
Filing Date	:NA
(62) Divisional to Application Number	:NA
Filing Date	:NA

(71)**Name of Applicant :**
1)MIZKAN HOLDINGS CO., LTD.
Address of Applicant :6, Nakamura-cho 2-chome, Handa-shi, Aichi 4758585 Japan
(72)**Name of Inventor :**
1)KONISHI, Manabu
2)IHARA, Junichiro

(57) Abstract :
The present invention provides a method for easily controlling a dry aroma and bringing out a sweet flavor that is characteristic of a plant in a dry plant powder. This dry plant powder satisfies the following conditions (1) to (5). (1) The dietary fiber content is 5 mass% or more in terms of dry weight. (2) The dimethylsulfoxide content is 1-40000 ppb inclusive. (3) The d50 of the particle diameter after ultrasonic treatment is 1000 μm or less. (4) The dimethylsulfide content is 1-2000 ppb inclusive. (5) The ratio (DMSO concentration/DMS concentration) of dimethylsulfoxide content to dimethylsulfide content is 0.001-180 inclusive.

No. of Pages : 50 No. of Claims : 10

(12) PATENT APPLICATION PUBLICATION
(21) Application No.202117008045 A
(19) INDIA
(22) Date of filing of Application :25/02/2021
(43) Publication Date : 16/07/2021

(54) Title of the invention : TAMPING DEVICE VIBRATION COMPONENT COMPRISING COOLING DEVICE, AND CORRESPONDING COOLING METHOD

(51) International classification	:G01M0013045000, F02C0007180000, E02D0003046000, B23Q0011120000, F04D0029040000	(71)**Name of Applicant :** **1)CRCC HIGH-TECH EQUIPMENT CORPORATION LIMITED** Address of Applicant :No. 384 YangFangWang Kunming, Yunnan 650215 China
(31) Priority Document No	:201910900948.5	(72)**Name of Inventor :**
(32) Priority Date	:23/09/2019	**1)ZHANG, Baoming**
(33) Name of priority country	:China	**2)YE, Yongqin**
(86) International Application No	:PCT/CN2020/071980	**3)LIU, Gang**
Filing Date	:14/01/2020	**4)YANG, Xiaomei**
(87) International Publication No	:WO 2021/056933	**5)FU, Lang**
(61) Patent of Addition to Application Number	:NA	**6)WANG, Hong**
Filing Date	:NA	**7)WANG, Hongbing**
		8)CHANG, Shijia
(62) Divisional to Application Number	:NA	**9)CAI, Wentao**
Filing Date	:NA	**10)ZHANG, Zhengming**

(57) Abstract :
A tamping device vibration component comprising a cooling device, and a cooling method therefor. The tamping device vibration component comprises an eccentric vibration shaft (1), a vibration bearing (21, 22, 23), and a vibration bearing sleeve (31, 32, 33). An inner side of the vibration bearing (21, 22, 23) is connected to the eccentric vibration shaft (1). An outer side of the vibration bearing (21, 22, 23) is connected to the vibration bearing sleeve (31, 32, 33). An outer side of the vibration bearing sleeve (31, 32, 33) is connected to a cooling device (41, 42, 43). The cooling method comprises: arranging the cooling device (41, 42, 43) on the periphery of a high temperature part of a vibration shaft component of a tamping device, injecting a coolant from a cooling inlet (422), flowing through a cooling channel (421), and flowing out from a cooling outlet (423) so as to take away the heat of the high temperature part and cool the high temperature part. By using the tamping device vibration component and the cooling method therefor, the vibration component can be effectively cooled, the high-frequency operation of the tamping device is achieved, and the service life of the tamping device is prolonged.

No. of Pages : 11 No. of Claims : 10

(12) PATENT APPLICATION PUBLICATION
(19) INDIA
(22) Date of filing of Application :07/03/2021
(21) Application No.202117009480 A
(43) Publication Date : 16/07/2021

(54) Title of the invention : FORMULATIONS CONTAINING ACTIVE OXYGEN COMPOUNDS AND DEVICES FOR APPLICATION THEREOF

(51) International classification	:A61Q0011000000, A61F0013020000, A61K0009127000, A61K0008490000, A61M0035000000
(31) Priority Document No	:P-201900011
(32) Priority Date	:14/01/2019
(33) Name of priority country	:Slovenia
(86) International Application No	:PCT/IB2020/050257
Filing Date	:14/01/2020
(87) International Publication No	:WO 2020/148642
(61) Patent of Addition to Application Number	:NA
Filing Date	:NA
(62) Divisional to Application Number	:NA
Filing Date	:NA

(71)**Name of Applicant :**
1)TOMPA MAJCEN, Dominika
Address of Applicant :Cesta Andreja Bitenca 118 1000 Ljubljana Slovenia
(72)**Name of Inventor :**
1)TOMPA MAJCEN, Dominika

(57) Abstract :
The present invention relates to formulations with active oxygen compounds that include active oxygen and other active ingredients for the purposes of care for and/or maintaining and preserving a healthy condition of skin and integumentary systems on the surface of the body of the organism and in the ears, healthy condition of finger- and toenails and of oral cavity, including its mucous membranes, teeth, interdental spaces and periodontal tissues (gingiva) in the oral cavity, i.e. the target areas of the organism. The formulation for skin and integumentary systems on the surface of the body and in the ears and for the finger- and toenails is in the form of a solution, gel, emulsion, lotion, milk, spray, cream, film dressing, liposomes and/or mycelia. The formulation for the oral cavity and related systems and structures, including teeth, interdental spaces and periodontal tissues (gingiva) is in the form of a solution, mouthwash, spray, gel, paste, emulsion, film dressing, liposomes and/or mycelia. These formulations are included in the device for its application on and/or into the said area of the organism.

No. of Pages : 53 No. of Claims : 31

(12) PATENT APPLICATION PUBLICATION
(19) INDIA
(22) Date of filing of Application :18/03/2021
(21) Application No.202117011508 A
(43) Publication Date : 16/07/2021

(54) Title of the invention : COMPLEX SURFACE-BOUND TRANSPOSOME COMPLEXES

(51) International classification	:C12Q0001680600, C12N0015100000, C12N0011060000, C12Q0001681100, C12N0015820000
(31) Priority Document No	:62/791509
(32) Priority Date	:11/01/2019
(33) Name of priority country	:U.S.A.
(86) International Application No	:PCT/EP2020/050612
Filing Date	:10/01/2020
(87) International Publication No	:WO 2020/144373
(61) Patent of Addition to Application Number	:NA
Filing Date	:NA
(62) Divisional to Application Number	:NA
Filing Date	:NA

(71)**Name of Applicant :**
1)ILLUMINA CAMBRIDGE LIMITED
Address of Applicant :19 Granta Park Great Abington Cambridge Cambridgeshire CB21 6DF U.K.
(72)**Name of Inventor :**
1)SLATTER, Andrew
2)MUSGRAVE- BROWN, Esther
3)VERITY, Susan C
4)GORMLEY, Niall

(57) Abstract :
The present disclosure relates to methods, compositions, and kits for generating a library of tagged nucleic acid fragments without using PCR amplification, including methods and compositions for fragmenting and tagging nucleic acids (e.g., DNA) using transposome complexes immobilized on solid support.

No. of Pages : 50 No. of Claims : 52

(12) PATENT APPLICATION PUBLICATION
(21) Application No.201721015068 A
(19) INDIA
(22) Date of filing of Application :28/04/2017
(43) Publication Date : 16/07/2021

(54) Title of the invention : SYSTEM AND METHOD FOR ACCELERATED DEHYDRATION OF GRAPES

(51) International classification	:F26B0021060000, F26B0013100000, A23B0007020000, F26B0021020000, F26B0015140000	(71)**Name of Applicant :** **1)Ashok Gurusiddappa Patil** Address of Applicant :4620, Patil Plaza, Nr IDBI Bank, Chinchwad,Pune-411019, Maharashtra, India Maharashtra India **2)Prakash Mugali** **3)Dr. Sanjay Shridhar Lakade**
(31) Priority Document No	:NA	
(32) Priority Date	:NA	
(33) Name of priority country	:NA	(72)**Name of Inventor :** **1)Ashok Gurusiddappa Patil** **2)Prakash Mugali** **3)Dr. Sanjay Shridhar Lakade**
(86) International Application No	:NA	
Filing Date	:NA	
(87) International Publication No	: NA	
(61) Patent of Addition to Application Number	:NA	
Filing Date	:NA	
(62) Divisional to Application Number	:NA	
Filing Date	:NA	

(57) Abstract :
SYSTEM AND METHOD FOR ACCELERATED DEHYDRATION OF GRAPES Abstract Present invention provides system (100) and method for accelerated dehydration of grapes. The system (100) comprises of drying chamber assemblies (20) having drying chambers (10), a frame structure (25), a waveguide assembly (30), conveyer belts (40) having gear units (35), curve conveyors (50), air blowers (60) with heater box units (55), exhaust fans (70), high voltage units (80) and a power controller (90) having a control panel. The method comprises preheating trays of grapes up to 2 hours at 60o C, turning on magnetron power one by one as the trays reach down to waveguide of corresponding magnetron for at least 4 hours, shutting down the magnetron and adjusting hot air temperature at 40oC to pass the grapes for one hour post heating to obtain dehydrated raisins. The invention achieves the drying of grapes by microwave assisted convective dryers and production of raisins with moisture content up to 25-30%. Figure 1

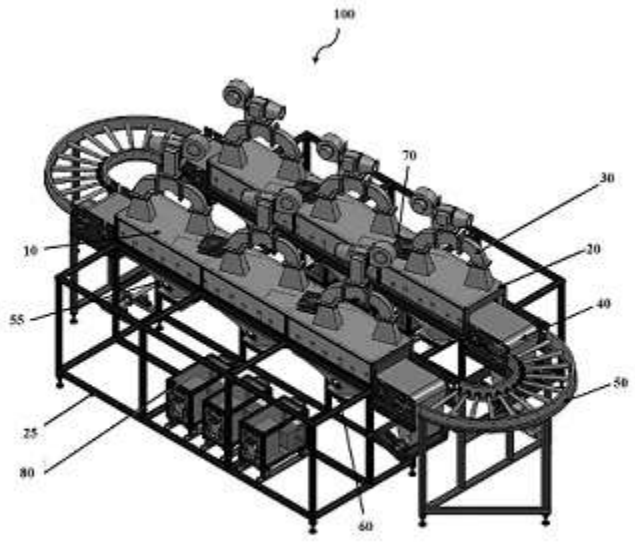

Figure 1

No. of Pages : 18 No. of Claims : 6

(12) PATENT APPLICATION PUBLICATION
(19) INDIA
(22) Date of filing of Application :23/02/2019

(21) Application No.201921007147 A
(43) Publication Date : 16/07/2021

(54) Title of the invention : PORTABLE PUMP TO PRODUCE ALKALINE WATER

(51) International classification	:A61M0005140000, A61M0005142000, A61M0005145000, C02F0001461000, B01D0053500000	(71)**Name of Applicant :** **1)ORG ENGITECH LTD** Address of Applicant :1009/P, B/H KASHI PACK CARE OPP TECHFLOW SINGARVA AHMEDABAD GUJARAT 382340 Gujarat India
(31) Priority Document No	:NA	(72)**Name of Inventor :**
(32) Priority Date	:NA	**1)GAJERA ANIL ARVINDBHAI**
(33) Name of priority country	:NA	
(86) International Application No	:NA	
Filing Date	:NA	
(87) International Publication No	: NA	
(61) Patent of Addition to Application Number	:NA	
Filing Date	:NA	
(62) Divisional to Application Number	:NA	
Filing Date	:NA	

(57) Abstract :
ABSTRACT The present invention relates to a portable pump to produce alkaline water when required. The present invention also relates to a portable pump to produce alkaline water from the purified water irrespective of the storage container.

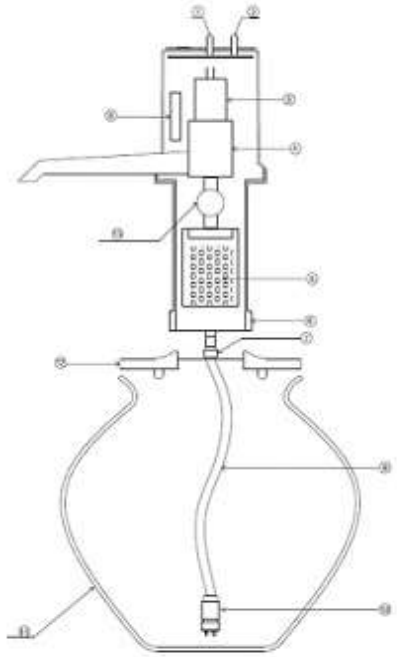

Fig 1

No. of Pages : 13 No. of Claims : 10

(12) PATENT APPLICATION PUBLICATION
(19) INDIA
(22) Date of filing of Application :04/04/2019

(21) Application No.201921008333 A
(43) Publication Date : 16/07/2021

(54) Title of the invention : ADAPTIVE PROSTHETIC ANKLE

(51) International classification	:A61F0002660000, A61F0002500000, A61F0002760000, A61F0002680000, A61F0002700000	(71)**Name of Applicant :** **1)Wahab Sheikh** Address of Applicant :132/2, Girad Road, Dhurkheda, Mangrud, Nagpur-441203 Maharashra, India Maharashtra India (72)**Name of Inventor :** **1)Wahab Sheikh**
(31) Priority Document No	:NA	
(32) Priority Date	:NA	
(33) Name of priority country	:NA	
(86) International Application No	:NA	
Filing Date	:NA	
(87) International Publication No	: NA	
(61) Patent of Addition to Application Number	:NA	
Filing Date	:NA	
(62) Divisional to Application Number	:NA	
Filing Date	:NA	

(57) Abstract :
Disclosed is an adaptive prosthetic ankle (100). The ankle (100) comprises a base assembly (20), the shock absorber assembly (40) and the top assembly (60). The base assembly (20) comprises at least one back leaf spring (1), at least one front leaf spring (2), a support member (3) for the front leaf spring (2), at least one base block (4), at least one stopper pad (5), a first shaft (15) and a second shaft (16). The shock absorber assembly (40) comprises pinion joints having one end is connected to a top block (7) with a third shaft (17) and another end connected to the base block (4) with the first shaft (15). The shafts (15 and 17) are supported at both ends by the bushes (19) and constrained by bolts (20). The top assembly (60) comprises the top block (7) and a male adapter (8), wherein the male adapter (8) mounted on top portion of the top block (7). Figure 1

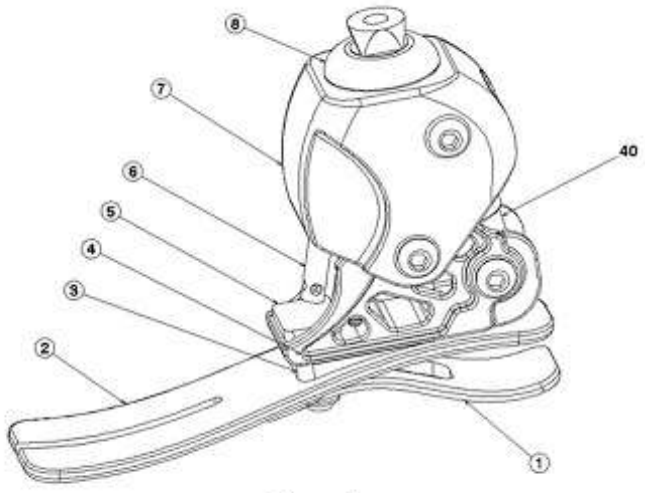

Figure 1

No. of Pages : 15 No. of Claims : 5

(12) PATENT APPLICATION PUBLICATION
(21) Application No.201921017267 A
(19) INDIA
(22) Date of filing of Application :30/04/2019
(43) Publication Date : 16/07/2021

(54) Title of the invention : IMPROVED PROCESS FOR PREPARATION OF NINTEDANIB AND PHARMACEUTICALLY SALTS THEREOF

(51) International classification	:A61K0031496000, C07D0209340000, C07D0471140000, C07D0487140000, C07D0471040000	(71)**Name of Applicant :** **1)Aarti Industries Limited** Address of Applicant :71, Udyog kshetra, 2nd Floor, Mulund Goregaon Link Road, Mulund (W), Mumbai - 400080, Maharashtra, India Maharashtra India
(31) Priority Document No	:NA	(72)**Name of Inventor :**
(32) Priority Date	:NA	**1)Parimal Hasmukhlal Desai**
(33) Name of priority country	:NA	**2)Kiran Shivaji Pokharkar**
(86) International Application No	:NA	**3)Shardul Dudheshwar Bharati**
Filing Date	:NA	**4)Vaibhavkumar Nivasrao Patil**
(87) International Publication No	: NA	**5)Bharatkumar Surendra Patravale**
(61) Patent of Addition to Application Number	:NA	
Filing Date	:NA	
(62) Divisional to Application Number	:NA	
Filing Date	:NA	

(57) Abstract :
The present invention discloses a process to prepare nintedanib and pharmaceutically acceptable salts thereof. The process comprises of reacting compound of Formula (II) and (III) to form compound of formula (IV), which on heating in the presence of a solvent forms nintedanib of Formula (I).

No. of Pages : 20 No. of Claims : 10

(12) PATENT APPLICATION PUBLICATION
(19) INDIA
(22) Date of filing of Application :04/05/2019

(21) Application No.201921017900 A
(43) Publication Date : 16/07/2021

(54) Title of the invention : AN PROTECTIVE EYE GEAR FOR NEONATAL PHOTOTHERAPY

(51) International classification	:A61N0005060000, A61F0009020000, A61K0041000000, A61K0009140000, A61F0009040000	(71)**Name of Applicant :** **1)VITALIS TECHNOLOGIES LLP** Address of Applicant :Flat No 11, Bhaktiyog Bldg, S No 123/A/1, Bhaktiyog Society, Paud Road, Kothrud Pune - 411 038 Maharashtra India
(31) Priority Document No	:NA	(72)**Name of Inventor :**
(32) Priority Date	:NA	**1)MANJIRI DESHPANDE**
(33) Name of priority country	:NA	**2)KAVITA DHUPKAR**
(86) International Application No	:NA	
Filing Date	:NA	
(87) International Publication No	: NA	
(61) Patent of Addition to Application Number	:NA	
Filing Date	:NA	
(62) Divisional to Application Number	:NA	
Filing Date	:NA	

(57) Abstract :
The various embodiments of the present invention provide a protective eye gear for neonatal phototherapy. The eye gear comprises an eye piece and a belt. The eye piece comprises of a pair of hollow domes connected over the nose with an adjustable bridge. The eye piece is fitted with a belt around the head. The belt is an adjustable strap connected to the eye piece through a set of push fit buttons provided on the sides of the eye piece.

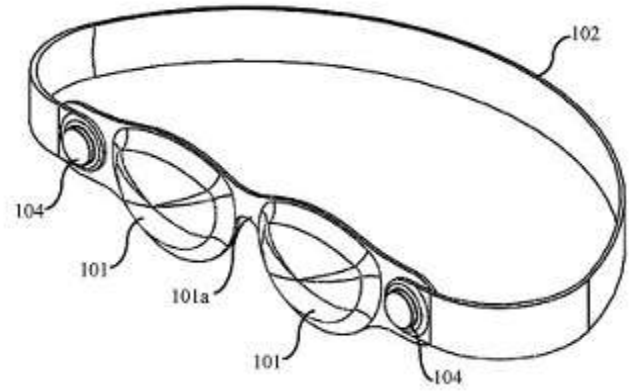

FIG. 1

No. of Pages : 18 No. of Claims : 4

(12) PATENT APPLICATION PUBLICATION
(19) INDIA
(22) Date of filing of Application :06/11/2019
(21) Application No.201924045132 A
(43) Publication Date : 16/07/2021

(54) Title of the invention : PCB STRUCTURE WITH A SILICONE LAYER AS ADHESIVE

(51) International classification	:H05K0001030000, H05K0003380000, C09J0007400000, C09J0183040000, D21F0001300000
(31) Priority Document No	:16/530,613
(32) Priority Date	:02/08/2019
(33) Name of priority country	:U.S.A.
(86) International Application No	:NA
Filing Date	:NA
(87) International Publication No	: NA
(61) Patent of Addition to Application Number	:NA
Filing Date	:NA
(62) Divisional to Application Number	:NA
Filing Date	:NA

(71)**Name of Applicant :**
1)PROLOGIUM TECHNOLOGY CO., LTD.
Address of Applicant :No.6-1, Ziqiang 7th Rd., Zhongli Dist., Taoyuan City, Taiwan
2)Prologium Holding Inc.
(72)**Name of Inventor :**
1)YANG, Szu-Nan

(57) Abstract :
A flexible printed circuit board includes a substrate that is made of a non-metal; a first modified silicone cured layer that is provided on and in contact with the substrate and that includes a first silicone material that is cured; a metal layer that is made of at least one metal; a second modified silicone cured layer that is provided on and in contact with the metal layer and that includes a second silicone material that is cured; and a silicone adhesive layer disposed between and in contact with the first modified silicone cured layer and the second modified silicone cured layer and that includes an adhesive silicone material that is cured by being thermally polymerized after lamination thereof between the first modified silicone cured layer and the second modified silicone cured layer. Lamination of the cured modified-silicone-coated substrate and the cured modified-silicone-coated metal layer with the silicone adhesive layer improves adhesion and reduces delamination.

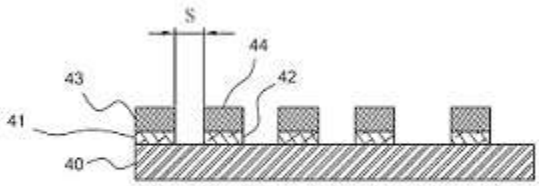

FIG. 1

No. of Pages : 19 No. of Claims : 13

(12) PATENT APPLICATION PUBLICATION
(19) INDIA
(22) Date of filing of Application :28/11/2019
(21) Application No.201924048882 A
(43) Publication Date : 16/07/2021

(54) Title of the invention : STACKING TYPE HYDROGEN GENERATING DEVICE

(51) International classification	:C25B0001040000, C25B0015080000, F24F0006000000, H01M0008065600, A61M0016100000	(71)**Name of Applicant :** **1)Lin, Hsin-Yung** Address of Applicant :No.758, Jiaxin Highway, Jiading District, Shanghai 201822, China. China (72)**Name of Inventor :** **1)Lin, Hsin-Yung**
(31) Priority Document No	:107143486	
(32) Priority Date	:04/12/2018	
(33) Name of priority country /region	:Taiwan	
(86) International Application No	:NA	
Filing Date	:NA	
(87) International Publication No	: NA	
(61) Patent of Addition to Application Number	:NA	
Filing Date	:NA	
(62) Divisional to Application Number	:NA	
Filing Date	:NA	

(57) Abstract :
The present invention provides a stacking type hydrogen generating device comprising an electrolysis module, a water tank, a filter and a humidifier. The electrolysis module is disposed in the water tank, the humidifier vertically stacked above the water tank, and the filter vertically stacked above the humidifier. A gas comprising hydrogen generated by the electrolysis module can enter the filter through the first flow channel of the humidifier and enter the humidifier after filtered by the filter. The flow channels between the aforementioned units are respectively integrated with the aforementioned units. Accordingly, the volume and the pipelines of the stacking type hydrogen generating device could be decrease and safety could be improved.

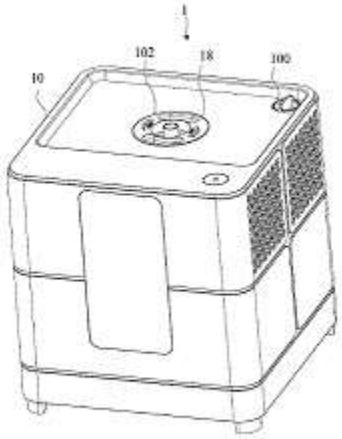

FIG. 1

No. of Pages : 39 No. of Claims : 20

(12) PATENT APPLICATION PUBLICATION
(19) INDIA
(22) Date of filing of Application :31/01/2019

(21) Application No.201927003927 A
(43) Publication Date : 16/07/2021

(54) Title of the invention : COMPUTER AIDED DESIGN FOR BRICK AND BLOCK CONSTRUCTIONS AND CONTROL SOFTWARE TO CONTROL A MACHINE TO CONSTRUCT A BUILDING

(51) International classification	:G06F 17/50, G06F 17/30, G05B 19/4097, E04G 21/22
(31) Priority Document No	:2016902787
(32) Priority Date	:15/07/2016
(33) Name of priority country	:Australia
(86) International Application No	:PCT/AU2017/050738
Filing Date	:17/07/2017
(87) International Publication No	:WO 2018/009985
(61) Patent of Addition to Application Number	:NA
Filing Date	:NA
(62) Divisional to Application Number	:NA
Filing Date	:NA

(71)**Name of Applicant :**
1)FASTBRICK IP PTY LTD
Address of Applicant :122 Sultana Road West High Wycombe Perth, Western Australia 6057 Australia
(72)**Name of Inventor :**
1)PIVAC, Mark

(57) Abstract :
Computer aided design software for designing a building or other structure of brick construction, where in addition to the usual three dimensional modelling and rendering typical of CAD software, tabular data describing the spatial location and orientation of each brick is provided, including information regarding which bricks are cut to length so as to be shortened, and where they are located along each course, and which bricks are machined, drilled or routed for services or other special fittings. Data pertaining to this is compiled in a database for access by control software to control a brick laying machine to build a building or other structure from bricks. The database may receive via interface with a scanner data being a measure of the elevation of the footings and/or concrete pad that has been constructed according to the building plan and for each brick of the first course, to determine how much material must be machined off the bottom of each brick so that when the first course is laid, the tops of the bricks of the first course are at the same level. This machining data is stored for each brick with the tabular data produced by computer aided design software, so that the control software can control the brick laying machine to machine and cut each brick as per the stored data, and convey each brick to the stored position on the footing, pad or previously laid course of bricks, with application of adhesive prior to positioning of the brick. Figure 25

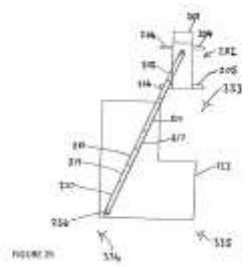

No. of Pages : 63 No. of Claims : 31

(12) PATENT APPLICATION PUBLICATION
(21) Application No.201927049214 A
(19) INDIA
(22) Date of filing of Application :29/11/2019
(43) Publication Date : 16/07/2021

(54) Title of the invention : ARRAY SUBSTRATE, DISPLAY PANEL AND DISPLAY DEVICE

(51) International classification :H01L 27/32
(31) Priority Document No :201820777664.2
(32) Priority Date :23/05/2018
(33) Name of priority country :China
(86) International Application No :PCT/CN2019/081587
Filing Date :04/04/2019
(87) International Publication No :WO 2019/223434
(61) Patent of Addition to Application Number :NA
Filing Date :NA
(62) Divisional to Application Number :NA
Filing Date :NA

(71)**Name of Applicant :**
1)BOE TECHNOLOGY GROUP CO., LTD.
Address of Applicant :No. 10 Jiuxianqiao Rd., Chaoyang District Beijing 100015 China
(72)**Name of Inventor :**
1)LI, Pan
2)QIAO, Yong
3)HAO, Xueguang

(57) Abstract :
An embodiment of the present disclosure relates to an array substrate, a display panel, and a display device. The array substrate comprises: a circuit region, the circuit region comprising a number of conductive layers that are stacked and interlayer insulating layers that are disposed between two adjacent conductive layers, wherein the interlayer insulating layers are provided thereon with first vias; and a boundary region that is disposed outside of the circuit region, a preset range at a side of the boundary region near the circuit region being internally provided with second vias used for improving the uniformity of the first vias of the circuit region, wherein the second vias and the first vias are disposed on the same interlayer insulating layer.

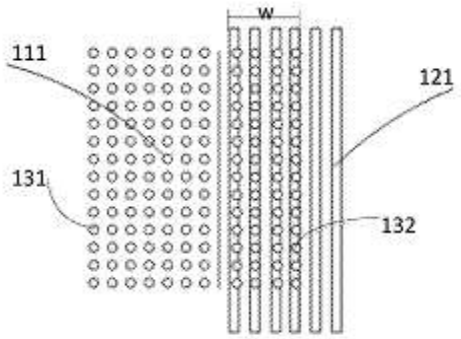

图 2

No. of Pages : 12 No. of Claims : 20

(12) PATENT APPLICATION PUBLICATION
(19) INDIA
(22) Date of filing of Application :03/12/2019
(21) Application No.201927049591 A
(43) Publication Date : 16/07/2021

(54) Title of the invention : ELECTROSTATIC PROTECTION CIRCUIT, ARRAY SUBSTRATE AND DISPLAY DEVICE

(51) International classification :H01L 27/02
(31) Priority Document No :201820855116.7
(32) Priority Date :04/06/2018
(33) Name of priority country :China
(86) International Application No :PCT/CN2019/081586
Filing Date :04/04/2019
(87) International Publication No :WO 2019/233173
(61) Patent of Addition to Application Number :NA
Filing Date :NA
(62) Divisional to Application Number :NA
Filing Date :NA

(71)**Name of Applicant :**
1)BOE TECHNOLOGY GROUP CO., LTD.
Address of Applicant :No. 10 Jiuxianqiao Rd. Chaoyang District Beijing 100015 China
(72)**Name of Inventor :**
1)LI, Pan
2)QIAO, Yong
3)HAO, Xueguang

(57) Abstract :
Provided by the present disclosure are an electrostatic protection circuit, an array substrate, and a display device. The electrostatic protection circuit comprises: a first voltage line to which a high level voltage is applied; a second voltage line to which a low level voltage is applied; and a switch assembly including a plurality of first switch units and a plurality of second switch units arranged in a line and sharing an active layer, wherein the plurality of first switch units are respectively connected between the plurality of signal lines and the first voltage line and are turned on in response to negative electrostatic on the signal lines; the plurality of second switch units are respectively connected between the plurality of signal lines and the second voltage line, and are turned on in response to positive electrostatic on the signal lines, wherein the plurality of signal lines are disposed in a peripheral area of the array substrate. According to the electrostatic protection circuit, the array substrate, and the display device of the present disclosure, the area occupied by the electrostatic protection circuit can be made small.

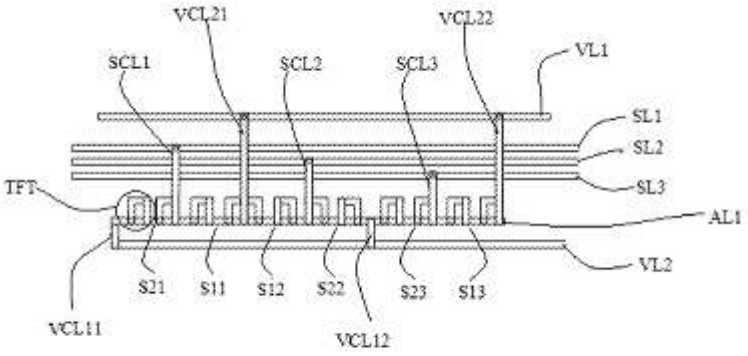

图 2

No. of Pages : 15 No. of Claims : 16

(12) PATENT APPLICATION PUBLICATION
(19) INDIA
(22) Date of filing of Application :12/12/2019
(21) Application No.201927051606 A
(43) Publication Date : 16/07/2021

(54) Title of the invention : DISPLAY SUBSTRATE AND PREPARATION METHOD THEREFOR AND DISPLAY PANEL

(51) International classification :H01L 27/32, H01L 51/52, H01L 51/56
(31) Priority Document No :201810862548.5
(32) Priority Date :01/08/2018
(33) Name of priority country :China
(86) International Application No :PCT/CN2019/091127
Filing Date :13/06/2019
(87) International Publication No :WO 2020/024705
(61) Patent of Addition to Application Number :NA
Filing Date :NA
(62) Divisional to Application Number :NA
Filing Date :NA

(71)**Name of Applicant :**
1)BOE TECHNOLOGY GROUP CO., LTD.
Address of Applicant :No.10 Jiuxianqiao Rd., Chaoyang District Beijing 100015 China
(72)**Name of Inventor :**
1)LONG, Chunping

(57) Abstract :
A display substrate and a preparation method therefor, and a display panel. The display substrate comprises a display area (101) and a non-display area (102) located around the display area (101); the display substrate further comprises a base substrate (100) and a first encapsulation layer (310) provided on the base substrate (100) and at least one barrier dam (200); the barrier dam (200) is located on the base substrate (100) in the non-display area (102); the first encapsulation layer (310) is located on the base substrate (100) and located on one side of the at least one barrier dam (200) facing the display area (101); the first encapsulation layer (310) is formed by a cured first encapsulation material (301); one side of the barrier dam at least facing the first encapsulation layer (310) has a lyophobic property with respect to the first encapsulation material (301) before curing. The barrier dam (200) can improve the encapsulation effect of the display substrate.

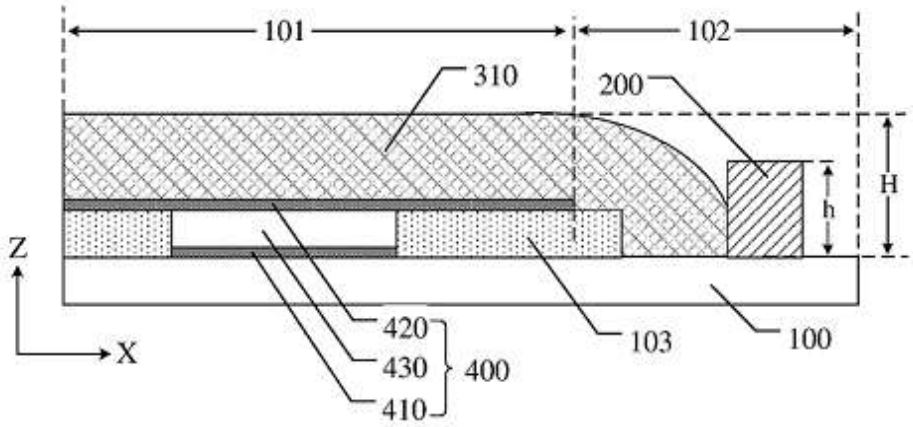

图 1B

No. of Pages : 31 No. of Claims : 21

(12) PATENT APPLICATION PUBLICATION
(19) INDIA
(22) Date of filing of Application :18/12/2019
(21) Application No.201927052682 A
(43) Publication Date : 16/07/2021

(54) Title of the invention : SHIFT REGISTER UNIT, GATE DRIVE CIRCUIT, DISPLAY DEVICE, AND DRIVING METHOD

(51) International classification :G09G 3/3208, G11C 19/28
(31) Priority Document No :201811003294.8
(32) Priority Date :30/08/2018
(33) Name of priority country :China
(86) International Application No :PCT/CN2019/088144
Filing Date :23/05/2019
(87) International Publication No :WO 2020/042685
(61) Patent of Addition to Application Number :NA
Filing Date :NA
(62) Divisional to Application Number :NA
Filing Date :NA

(71)**Name of Applicant :**
1)BOE TECHNOLOGY GROUP CO., LTD.
Address of Applicant :No.10 Jiuxianqiao Rd., Chaoyang District Beijing 100015 China
2)HEFEI BOE JOINT TECHNOLOGY CO., LTD.
(72)**Name of Inventor :**
1)FENG, Xuehuan
2)LI, Yongqian

(57) Abstract :
A shift register unit (10), a gate drive circuit (20), a display device (1), and a driving method. The shift register unit (10) comprises a first input circuit (100), an output circuit (200), and a charging enhancement circuit (300). The first input circuit (100) is configured to charge a first node (Q) in response to a first input signal (STU1); the output circuit (200) is configured to output a shift signal (CR) and a first output signal (OUT1) under control of the level of the first node (Q); the charging enhancement circuit (300) is configured to further enhance the level of the first node (Q) in response to a charging enhancement signal (CE). The shift register unit (10) is able to enhance the level of the first node (Q), and the reliability of the gate drive circuit (20) and the display device (1) constituted by the shift register unit (10) is improved.

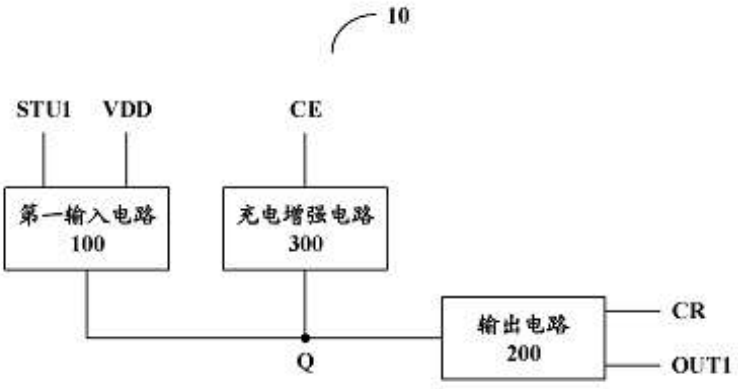

图 1

100 First input circuit
200 Output circuit
300 Charging enhancement circuit

No. of Pages : 72 No. of Claims : 20

(12) PATENT APPLICATION PUBLICATION
(19) INDIA
(22) Date of filing of Application :09/01/2020
(21) Application No.202021000919 A
(43) Publication Date : 16/07/2021

(54) Title of the invention : A METHOD TO IMPROVE PROPERTIES OF RESISTANCE SPOT WELDMENTS (COLD ROLLED MILD STEEL) WELDED WITH FILLER METAL (COLD ROLLED MILD STEEL) BY ANNEALING TREATMENT.

(51) International classification	:B23K0011110000, C21D0009500000, B23K0011100000, B23K0011160000, B23K0026220000
(31) Priority Document No	:NA
(32) Priority Date	:NA
(33) Name of priority country	:NA
(86) International Application No	:NA
Filing Date	:NA
(87) International Publication No	: NA
(61) Patent of Addition to Application Number	:NA
Filing Date	:NA
(62) Divisional to Application Number	:NA
Filing Date	:NA

(71)**Name of Applicant :**
1)SUSHIL T AMBADKAR
Address of Applicant :PLOT NO. 7, DATTATRAYA NAGAR, NAGPUR - 440024, MAHARASHTRA, INDIA. Maharashtra India
2)DR DEEPAK V BHOPE
(72)**Name of Inventor :**
1)SUSHIL T AMBADKAR
2)DR DEEPAK V BHOPE

(57) Abstract :
CRASH PERFORMANCE OF A VEHICLE DIRECTLY DEPENDS ON AUTOMOTIVE BODY MATERIAL AND ITS FABRICATION METHOD. RESISTANCE SPOT WELDING IS MOST USED AS FABRICATION TECHNIQUE FOR JOINING AUTO-BODY. MECHANICAL BEHAVIOUR OF SPOT WELD CONTROLS PERFORMANCE OF VEHICLE BODY STRUCTURE IN CRASH.THE SPOT WELDING PROCESS IS USED DUE TO ITS HIGH PRODUCTIVITY, FLEXIBILITY, AND SUITABILITY. IN RESISTANCE SPOT WELDING, A SMALL WELD CALLED NUGGET IS FORMED BETWEEN TWO METAL WORK PIECES BY LOCALIZED MELTING DUE TO RESISTIVE HEATING CAUSED BY A FLOW OF ELECTRIC CURRENT. MILD STEEL IS MOST PREFERRED MATERIAL FOR AUTOMOTIVE STRUCTURES DUE TO ITS ECONOMY, EASY AVAILABILITY AND EXCELLENT MECHANICAL PROPERTIES.IT HAS BEEN PROVED THAT MECHANICAL PROPERTIES OF SPOT WELDMENTS CAN BE IMPROVED BY THE ADDITION OF SMALL QUANTITY OF FILLER METAL. HEAT TREATMENT CYCLES LIKE ANNEALING ARE WELL KNOWN TO MODIFY STUCTURES, GRAIN ORIENTATION AND FOR STRESS RELIEVING IN WELDED STRUCTURES. MILD STEEL SPOT WELDING PROCESS WITH FILLER METAL AND SUITABLE ANNEALING CYCLE CAN GIVE AN EXCELLENT AND REASONABLY ECONOMICAL COMBINATION OF MECHANICAL PROPERTIES LIKE EXCELLENT STRENGTH TO WEIGHT RATIO WHICH IS ONE OF THE INDICATOR OF CRASH PERFORMANCE. THUS FILLER METALS AND ANNEALING TREATMENT IF COMBINED IN PROPER MANNER CAN GIVE DESIRED RESULTS IN SPOT WELDS.FILLER METAL ADDITION IN SPOT WELDING ITSELF IS RESPONSIBLE FOR GIVING MORE STRENGTH AND GOOD PLASTICITY BUT THESE PROPERTIES AND ITS SENSITIVITY TO ANNEALING HEAT TREATMENT CAN BE CORELATED IF SPOT WELDING IS PERFORMED WITH ANNEALING CYLCE. THUS OPTIMUM QUANTITY OF FILLER METAL COUPLED WITH SUITABLE ANNEALING CYCLE WILL ENSURE OPTIMUM PROPERTIES OF WELDMENT.

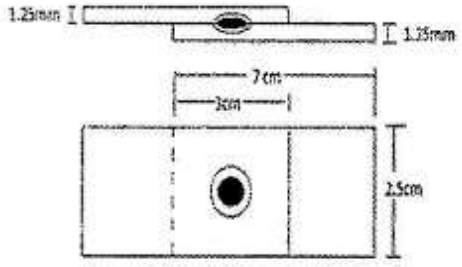

No. of Pages : 6 No. of Claims : 1

(12) PATENT APPLICATION PUBLICATION
(19) INDIA
(22) Date of filing of Application :09/01/2020

(21) Application No.202021000930 A
(43) Publication Date : 16/07/2021

(54) Title of the invention : CONE-SHAPED APPARATUS FOR HOLDING SUBSTANCE

(51) International classification	:B01J0008020000, B02C0002000000, B01D0046240000, A21B0005020000, A47J0019020000	(71)**Name of Applicant :** **1)Cgenic Meditech Private Limited** Address of Applicant :B-1, Navdurga Society, Bh Ambalal Marriage Hall, Nizampura, Vadodara -390002, Gujarat, India. Gujarat India
(31) Priority Document No	:NA	(72)**Name of Inventor :**
(32) Priority Date	:NA	**1)ANIL PEDDI**
(33) Name of priority country	:NA	**2)RAGHU VAMSHI P**
(86) International Application No	:NA	**3)KWANHO HONG**
Filing Date	:NA	
(87) International Publication No	: NA	
(61) Patent of Addition to Application Number	:NA	
Filing Date	:NA	
(62) Divisional to Application Number	:NA	
Filing Date	:NA	

(57) Abstract :
A cone-shaped apparatus for holding a substance is disclosed. The apparatus includes an outer cone that has a curved surface that is open at an upper end. The curved surface includes at least one perforated lining on an outer periphery at a predefined position from the open upper end such that the at least one perforated lining divides the curved surface into at least one upper part and at least one lower part. The apparatus includes an inner cone disposed inside the outer cone such that a vertex of the inner cone coincides with a vertex of the outer cone. The at least perforated lining allows separation of the at least one upper part from the at least one lower part.

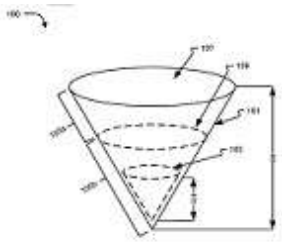

FIG. 1A

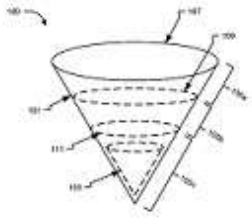

FIG. 1B

No. of Pages : 14 No. of Claims : 7

(12) PATENT APPLICATION PUBLICATION
(21) Application No.202021000955 A
(19) INDIA
(22) Date of filing of Application :09/01/2020
(43) Publication Date : 16/07/2021

(54) Title of the invention : SYSTEMS AND METHODS FOR CONTROLLING USE OF MULTIPLE FUELS IN FUEL CELLS

(51) International classification	:H01M0008061200, H01M0008066200, H01M0008101800, H01M0008245700, H01M0008040890	(71)**Name of Applicant :** **1)h2e Power Systems Pvt. Ltd.** Address of Applicant :20, Sangam Project Phase-II, Wellesley Road, Pune-411001, Maharashtra, India Maharashtra India **2)Indian Oil Corporation Limited**
(31) Priority Document No	:NA	(72)**Name of Inventor :**
(32) Priority Date	:NA	**1)AMARNATH, Chakradeo A.**
(33) Name of priority country	:NA	**2)SIDDHARTH, Mayur R.**
(86) International Application No	:NA	**3)SHARMA, Alok**
Filing Date	:NA	**4)CHUGH, Sachin**
(87) International Publication No	: NA	
(61) Patent of Addition to Application Number	:NA	
Filing Date	:NA	
(62) Divisional to Application Number	:NA	
Filing Date	:NA	

(57) Abstract :
The present disclosure relates to methods and systems for using multiple fuels in a fuel cell system. In an embodiment, the fuel cell system 100 may include a selction unit 101, a control unit 102, and a reformer unit 103 in communication with each other. The selection unit adpated to select one of the multiple fuels to be used for generating electrical energy. The control unit adapted to control a value of at least one operational parameter based on the selected fuel. The operational parameter comprising an oxygen-carbon ratio, at least one safety temperature, at least one set-point temperature, and a mass-flow ratebased on the fuel selected through the selection unit. Further, the reformer unit is adapted to receive a flow of air, a flow of oxygen, a flow of steam, and a flow of the selected fuel and generate an air-fuel mixture for power generation based on the at least one operational parameter controlled by the control unit.

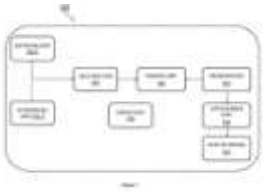

No. of Pages : 24 No. of Claims : 10

(12) PATENT APPLICATION PUBLICATION
(19) INDIA
(22) Date of filing of Application :09/01/2020

(21) Application No.202021001065 A
(43) Publication Date : 16/07/2021

(54) Title of the invention : AN ARRANGEMENT FOR FLEXIBLY MOUNTING COMPONENTS IN A VEHICLE •

(51) International classification	:F01D0009040000, A47B0095000000, G06K0007100000, B23K0037040000, B60P0003340000	(71)**Name of Applicant :** **1)TATA MOTORS LIMITED** Address of Applicant :Bombay House, 24 Homi Mody Street, Hutatma Chowk, Mumbai 400 001, Maharashtra, INDIA Maharashtra India
(31) Priority Document No	:NA	(72)**Name of Inventor :**
(32) Priority Date	:NA	**1)Santosh Pote**
(33) Name of priority country	:NA	**2)Rajesh Kumar Bhatt**
(86) International Application No	:NA	**3)Sujit Sahoo**
Filing Date	:NA	**4)Jagdish Mane**
(87) International Publication No	: NA	**5)Rajaraman Swaminathan**
(61) Patent of Addition to Application Number	:NA	
Filing Date	:NA	
(62) Divisional to Application Number	:NA	
Filing Date	:NA	

(57) Abstract :
The present disclosure discloses an arrangement (101) for mounting a DRL (10). The arrangement comprises a carrier (8) defined with a slot (9). The arrangement also includes a catcher clip (100) with a base portion (1) comprising a plurality of support members (2). The support members (2) extend from either ends of a first surface (3), defining a gap (G). Further, a free end of each of the support members (2) is defined with a catcher portion (5). The gap (G) receives a bracket (11) of the DRL (10) and is supported by the catcher portion (5). Further, protrusions (14) extend from a second surface (4) of the base portion (1) and are received by the slot (9) in the carrier (8).The arrangement provides movement in the longitudinal and vertical directions (X, Y and Z) which provides the targeted gap (G) & flush values of DRLs (10) with other components. Fig. 5 is the representative figure.

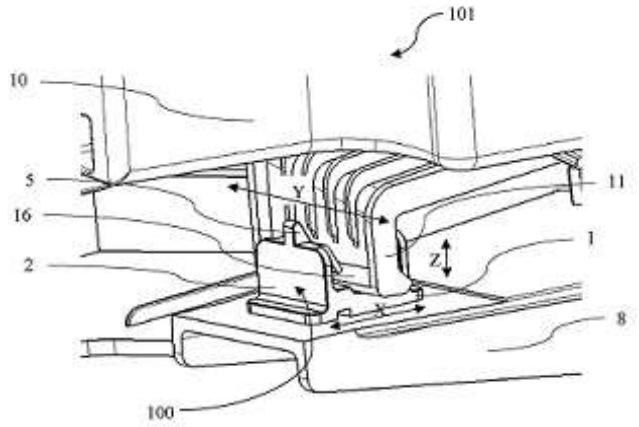

Fig. 5

No. of Pages : 21 No. of Claims : 12

(12) PATENT APPLICATION PUBLICATION
(21) Application No.202021001168 A
(19) INDIA
(22) Date of filing of Application :10/01/2020
(43) Publication Date : 16/07/2021

(54) Title of the invention : THE DESIGN OF A PEDAL DRIVEN SYSTEM CONVERTIBLE TO THE ELECTRIC DRIVEN COMFORTABLE MULTIPURPOSE RIDER

(51) International classification	:B62K0001000000, B62M0006500000, G02B0027640000, B62M0006450000, G10H0001320000
(31) Priority Document No	:NA
(32) Priority Date	:NA
(33) Name of priority country	:NA
(86) International Application No	:NA
Filing Date	:NA
(87) International Publication No	: NA
(61) Patent of Addition to Application Number	:NA
Filing Date	:NA
(62) Divisional to Application Number	:NA
Filing Date	:NA

(71)**Name of Applicant :**
1)AYAZ MOHAMMED ABDUL RAHMAN SHAIKH
Address of Applicant :BLOCK NO. 1/A, SUNDARBAUG TOWER. VADODARA - 390001, GUJARAT, INDIA. Gujarat India
2)MUFID ABDUL REHMAN SHAIKH
(72)**Name of Inventor :**
1)AYAZ MOHAMMED ABDUL RAHMAN SHAIKH
2)MUFID ABDUL REHMAN SHAIKH

(57) Abstract :
The invention is about a pedal-driven system which is attached to the electric system so that the rider can use the power in case of inclination and rough roads thus saving the physical strength. The system is designed with multi - modes so as to provide comfort to the rides. The system is designed to modify itself manually or automatically as per the requirement of the user. The system can change its modes and can serve as a multipurpose system without complexity. It can be converted from unicycle to bicycle and from bicycle to a tricycle if required. The entire frame of the system is made flexible to assume the required shape as per the mode selected by the user and it can be folded so as to make it easily portable,

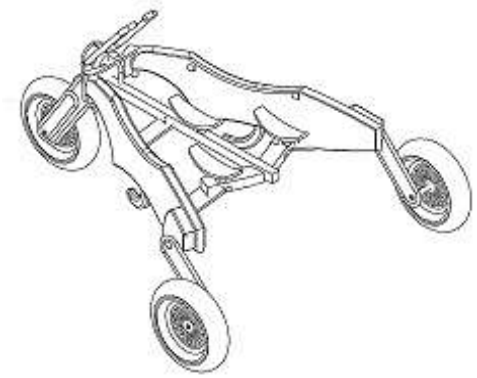

Figure - 1 : Diagrammatic view of the three wheeled arrangement of the pedal driven system

No. of Pages : 25 No. of Claims : 9

(12) PATENT APPLICATION PUBLICATION
(19) INDIA
(22) Date of filing of Application :10/01/2020

(21) Application No.202021001187 A
(43) Publication Date : 16/07/2021

(54) Title of the invention : A PEROVSKITE SOLAR CELLS POWERED SYSTEM TO MONITOR MULTISTORIED BUILDINGS TO SECURE HUMAN LIFE.

(51) International classification	:H01L0051420000, H02S0010400000, F24S0090000000, G01R0015200000, F24S0030000000	(71)**Name of Applicant :** **1)DR. RENU CHOITHRANI** Address of Applicant :ASSISTANT PROFESSOR, DEPARTMENT OF PHYSICS AND ELECTRONICS, BARKATULLAH UNIVERSITY, BHOPAL - 462026, MADHYA PRADESH, INDIA. Madhya Pradesh India
(31) Priority Document No	:NA	
(32) Priority Date	:NA	(72)**Name of Inventor :**
(33) Name of priority country	:NA	**1)DR. RENU CHOITHRANI**
(86) International Application No	:NA	
Filing Date	:NA	
(87) International Publication No	: NA	
(61) Patent of Addition to Application Number	:NA	
Filing Date	:NA	
(62) Divisional to Application Number	:NA	
Filing Date	:NA	

(57) Abstract :
This invention consists of a system capable of rescuing people who jumps from a multi-storeyed building due to multiple reasons including fire breakout, earthquake or even in case to commit suicide by inflating cushioned based rescue detonators which can safely catch the jumper without any impact to the person. system is designed with sensor assemblies so as monitor and analyse the situation in a building and to identify fire break out so as to raise alarm. The system is powered using solar energy which is obtained using perovskite solar cells equipped solar panels which are highly efficient and can produce more than required energy to power the system. The additional power generated is stored into batteries which can be used for various facilities in the building thus ensuring that the system will be active at all times and can power the inflatable means whenever required with any dependency on the power which is used by the building.

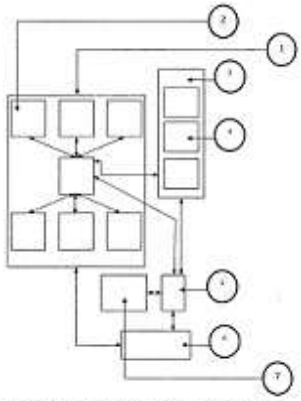

FIGURE - 1 : DIAGRAMMATIC VIEW OF THE ARCHITECTURE OF THE SYSTEM.

No. of Pages : 25 No. of Claims : 6

(12) PATENT APPLICATION PUBLICATION
(19) INDIA
(22) Date of filing of Application :10/01/2020

(21) Application No.202021001198 A
(43) Publication Date : 16/07/2021

(54) Title of the invention : AN IMPROVED PROCESS OF PREPARATION OF BINIMETINIB.

(51) International classification	:C07D0401120000, C07D0235100000, C07D0235280000, C07D0235300000, C07D0401040000	(71)**Name of Applicant :** **1)ALEMBIC PHARMACEUTICALS LIMITED** Address of Applicant :ALEMBIC PHARMACEUTICALS LIMITED Alembic Research Centre, Alembic Pharmaceuticals Limited , Alembic Road, Vadodara. Gujarat India
(31) Priority Document No	:NA	(72)**Name of Inventor :**
(32) Priority Date	:NA	**1)Kondepati, Venkata Ramana**
(33) Name of priority country	:NA	**2)Shah, Bhavik**
(86) International Application No	:NA	**3)T. V. S. K. Vittal**
Filing Date	:NA	**4)Raval, Prashant**
(87) International Publication No	: NA	**5)Dhameliya, Dharmesh**
(61) Patent of Addition to Application Number	:NA	
Filing Date	:NA	
(62) Divisional to Application Number	:NA	
Filing Date	:NA	

(57) Abstract :
Abstract Title: An improved Process of preparation of Binimetinib The present application describes an improved process of preparation of benzimidazole compounds such as Binimetinib.

No. of Pages : 17 No. of Claims : 10

(12) PATENT APPLICATION PUBLICATION
(19) INDIA
(22) Date of filing of Application :10/01/2020
(21) Application No.202021001215 A
(43) Publication Date : 16/07/2021

(54) Title of the invention : PROCESS FOR PREPARATION OF TEZACAFTOR

(51) International classification	:H01M0010440000, G11B0017049000, G03G0015080000, A24D0003060000, B65D0006220000
(31) Priority Document No	:NA
(32) Priority Date	:NA
(33) Name of priority country	:NA
(86) International Application No	:NA
Filing Date	:NA
(87) International Publication No	: NA
(61) Patent of Addition to Application Number	:NA
Filing Date	:NA
(62) Divisional to Application Number	:NA
Filing Date	:NA

(71)**Name of Applicant :**
1)LUPIN LIMITED
Address of Applicant :Kalpataru Inspire, 3rd Floor, Off Western Express Highway, Santacruz (East), Mumbai 400 055, Maharashtra, India Maharashtra India
(72)**Name of Inventor :**
1)JADHAV, Harishchandra Sambhaji
2)PADWAL, Daulat Madhukar
3)JADHAV, Swapnil Dnyandev
4)SHRIVASTAVA, Dhananjai
5)SINGH, Girij Pal

(57) Abstract :
The present invention provides novel intermediates for tezacaftor, process for preparation of these intermediates and process for preparation of tezacaftor thereof.

No. of Pages : 20 No. of Claims : 10

(12) PATENT APPLICATION PUBLICATION
(19) INDIA
(22) Date of filing of Application :10/01/2020

(21) Application No.202021001230 A
(43) Publication Date : 16/07/2021

(54) Title of the invention : FLUID SPRAY SYSTEM WITH ORIFICES

(51) International classification	:A23D0007005000, B23K0026382000, A23D0007010000, D01D0005110000, B05B0012080000	(71)**Name of Applicant :** **1)JAIN IRRIGATION SYSTEMS LIMITED** Address of Applicant :Jain Plastic Park, NH No. 6 Bambhori, Jalgaon 425001, Maharashtra, India. Maharashtra India
(31) Priority Document No	:NA	(72)**Name of Inventor :**
(32) Priority Date	:NA	**1)Jain Ajit Bhavarlal**
(33) Name of priority country	:NA	**2)Joshi Abhijit Bhaskar**
(86) International Application No	:NA	**3)Patil Sachin Siddharam**
Filing Date	:NA	
(87) International Publication No	: NA	
(61) Patent of Addition to Application Number	:NA	
Filing Date	:NA	
(62) Divisional to Application Number	:NA	
Filing Date	:NA	

(57) Abstract :
FLUID SPRAY SYSTEM WITH ORIFICES ABSTRACT According to the present disclosure, a spray system (2) with a plurality of orifices is disclosed. The spray system comprises a plurality of spray tubes (2.1, 2.4, 2.5) positioned in a pattern. Each spray tube comprises a plurality of orifices of a plurality of geometries, placed at a plurality of pre-determined locations on a periphery of the spray tube. The plurality of spray tubes (2.1, 2.4, 2.5) is placed at a spacing with each other for a length to obtain predetermined wetting patterns (2.2, 2.3, 2.6, 2.7). The plurality of orifices are configured to obstruct partially and break a fluid jet to spread an irrigating fluid, such as water, to a large surface area. An effective diameter of these geometries of orifices are maintained to obtain fairly low flow to achieve longer running lengths for a lower pressure drop across the tube as compare to conventional spray tubes.

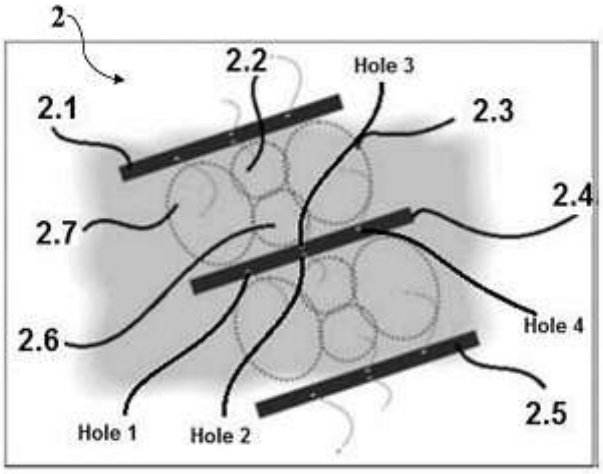

Figure. 2

No. of Pages : 19 No. of Claims : 18

(12) PATENT APPLICATION PUBLICATION
(19) INDIA
(22) Date of filing of Application :10/01/2020

(21) Application No.202021001232 A
(43) Publication Date : 16/07/2021

(54) Title of the invention : METHOD AND SYSTEM FOR MEDICAL IMAGING EVALUATION

(51) International classification	:G06T0007000000, G16H0050200000, G06K0009620000, G16H0030400000, G01N0021640000	(71)**Name of Applicant :** **1)Qure.AI Technologies Private Limited** Address of Applicant :1st Floor, Raheja Titanium, Off Western Express Highway, Goregaon (East), Mumbai 400063, Maharashtra, India Maharashtra India
(31) Priority Document No	:NA	(72)**Name of Inventor :**
(32) Priority Date	:NA	**1)Preetham Putha**
(33) Name of priority country	:NA	**2)Manoj Tadepalli**
(86) International Application No	:NA	**3)Bhargava Reddy**
Filing Date	:NA	**4)Tarun Raj**
(87) International Publication No	: NA	**5)Ammar Jagirdar**
(61) Patent of Addition to Application Number	:NA	**6)Pooja Rao**
Filing Date	:NA	**7)Prashant Warier**
(62) Divisional to Application Number	:NA	
Filing Date	:NA	

(57) Abstract :
This disclosure generally pertains to methods and systems for processing electronic data obtained from imaging or other diagnostic and evaluative medical procedures. Certain embodiments relate to methods for the development of deep learning algorithms that perform machine recognition of specific features and conditions in imaging and other medical data. Another embodiment provides systems configured to detect and localize medical abnormalities on medical imaging scans by a deep learning algorithm.

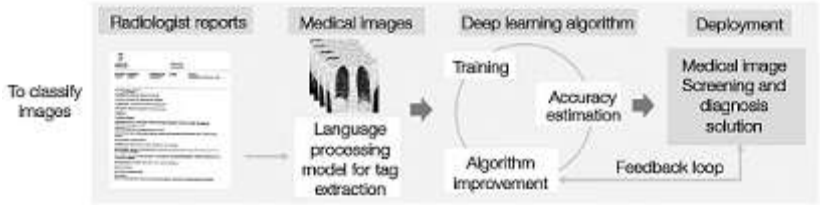

FIG. 1

No. of Pages : 33 No. of Claims : 22

(12) PATENT APPLICATION PUBLICATION
(19) INDIA
(22) Date of filing of Application :10/01/2020

(21) Application No.202021001234 A
(43) Publication Date : 16/07/2021

(54) Title of the invention : UL- POWERBANK:UNIVERSAL LAPTOP POWERBANK

(51) International classification	:H02J0007000000, H02J0050400000, H01R0024780000, G06Q0020140000, A45C0011000000	(71)**Name of Applicant :** **1)ER. KENDRE MAHESH VINAYAK** Address of Applicant :NEAR MATOSHRI MARATHI SCHOOL, KARADNAGAR, AHAMADPUR, LATUR,MH-413515, INDIA Maharashtra India **2)ER. UBALE SOURABH MAHESH**
(31) Priority Document No	:NA	
(32) Priority Date	:NA	
(33) Name of priority country	:NA	(72)**Name of Inventor :**
(86) International Application No	:NA	**1)ER. KENDRE MAHESH VINAYAK**
Filing Date	:NA	**2)ER. UBALE SOURABH MAHESH**
(87) International Publication No	: NA	
(61) Patent of Addition to Application Number	:NA	
Filing Date	:NA	
(62) Divisional to Application Number	:NA	
Filing Date	:NA	

(57) Abstract :
My Invention • UL- POWERBANK • if fully dependents of electronics gaugeate all of you know we face problems to get power supply outdoor so we invented Universal power bank for laptop which is user friendly and compact size. We carry around us power bank that charges our cell phone, but often times we found ourselves in need of a power outlet to charge our laptops while traveling. Running out of power with no access to a socket sometimes means no productivity, which isn™t an option in today™s demanding and time-sensitive environment. By taking this consideration we invented successfully Universal power bank for laptop. So we can charge laptop twice at single charge of Universal power bank (depends upon batteries capacity it varies). As well as smart phones can be charge with wired and wireless. User can charge this Universal power bank by using his laptop charger or smartphone charger. There is no need to carry another charger for this power bank. There are plenty of these in market, at a wide range of price points. No one of these are like oar™s, we have tried to do something different than others.

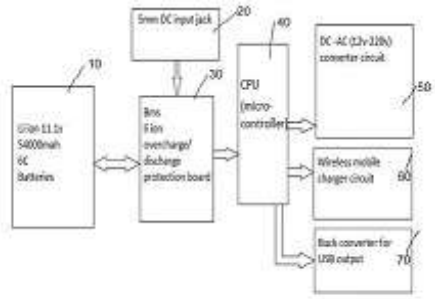

Fig.1:Block Diagram

No. of Pages : 22 No. of Claims : 8

(12) PATENT APPLICATION PUBLICATION
(19) INDIA
(22) Date of filing of Application :10/01/2020

(21) Application No.202021001248 A
(43) Publication Date : 16/07/2021

(54) Title of the invention : A TOPICAL PHARMACEUTICAL SOLUTION OF PHENYTOIN •

(51) International classification	:A61K0009000000, A61K0031416600, A61K0009080000, A61K0031401500, A61K0031573000	(71)**Name of Applicant :** **1)CADILA HEALTHCARE LIMITED** Address of Applicant :Zydus Corporate Park, Scheme No. 63, Survey No. 536, Khoraj (Gandhinagar), Nr. Vaishnodevi Circle, Sarkhej Gandhinagar Highway, Ahmedabad 382481, Gujarat, India Gujarat India
(31) Priority Document No	:NA	
(32) Priority Date	:NA	(72)**Name of Inventor :**
(33) Name of priority country	:NA	**1)PATEL, Satish**
(86) International Application No	:NA	**2)LADDHA, Ritu**
Filing Date	:NA	**3)PAWAR, Harish**
(87) International Publication No	: NA	
(61) Patent of Addition to Application Number	:NA	
Filing Date	:NA	
(62) Divisional to Application Number	:NA	
Filing Date	:NA	

(57) Abstract :
ABSTRACT A TOPICAL PHARMACEUTICAL SOLUTION OF PHENYTOIN • Present invention relates to a topical pharmaceutical solution of phenytoin or its pharmaceutically acceptable salts and isopropyl alcohol. Topical pharmaceutical solution of phenytoin is useful for treating/ameliorating effects of vitiligo, wound or pain. The topical solution of present invention is administered by roll-on application. Figure - 1

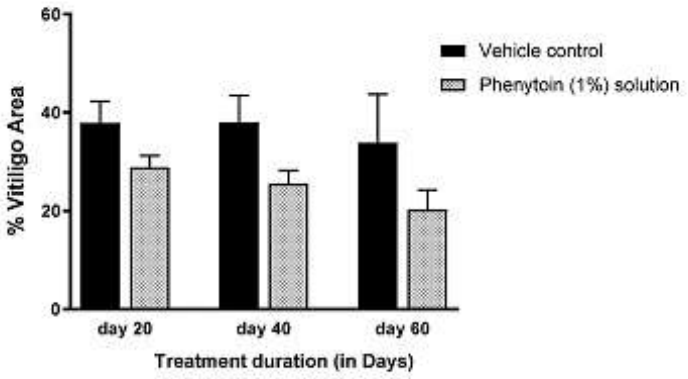

Figure 1: Effect of topical solution of phenytoin (1.0%) on vitiligo model in mice.

No. of Pages : 19 No. of Claims : 20

(12) PATENT APPLICATION PUBLICATION
(19) INDIA
(22) Date of filing of Application :10/01/2020

(21) Application No.202021001255 A
(43) Publication Date : 16/07/2021

(54) Title of the invention : AN INSULATION CASTABLE COMPRISING HAZARDOUS WASTE FROM STEEL PLANT AND PROCESS TO PRODUCE THE SAME.

(51) International classification	:C04B0038000000, C04B0035630000, C04B0028060000, C22B0001243000, C04B0035140000	(71)**Name of Applicant :** **1)JSW STEEL LIMITED** Address of Applicant :JSW CENTRE, BANDRA KURLA COMPLEX, BANDRA (EAST), MUMBAI, MAHARASHTRA, INDIA. PIN-400051 Maharashtra India
(31) Priority Document No	:NA	(72)**Name of Inventor :**
(32) Priority Date	:NA	**1)ASHRIT, Venugopal**
(33) Name of priority country	:NA	**2)BISWAS, Samiran**
(86) International Application No	:NA	**3)BHARATI, Sanghamitra**
Filing Date	:NA	**4)N, Niranjan**
(87) International Publication No	: NA	**5)S, Sundaresan**
(61) Patent of Addition to Application Number	:NA	
Filing Date	:NA	
(62) Divisional to Application Number	:NA	
Filing Date	:NA	

(57) Abstract :
The present invention relates to provide insulation castable comprising low density refractory castable and hazardous alumino-silicate based ceramic fibre blanket (CFB) waste from steel plant for non-critical applications. Importantly, the insulation castable is produced by adding 1-5 wt% of extracted fibre from CFB waste with castable followed by dry mixing and wet mixing of the mixture.The process requires sufficient water addition during wet mixing to obtain the green mix for installation by casting, cast-vibrating, rodding or trowelling. The insulation castable having a bulk density of about 1.4-1.55 g/cc after oven drying at 110°C for 24 hours; a cold crushing strength of about 80-110 kg/cm2after oven drying at 110oC for 24 hours and 40-55 kg/cm2 after firing at 1200°C for 2 hours; a permanent linear change of about 1.15%-1.65% shrinkage after firing at 1000°C for 2 hours and 0.65%-0.85% shrinkageafter firing at 1200°C for 2 hours and thermal conductivity of 0.3-0.88 W/mK at 1000°C.

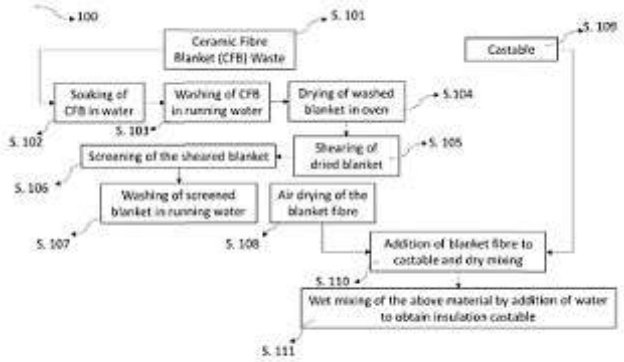

Figure 1

No. of Pages : 19 No. of Claims : 10

(12) PATENT APPLICATION PUBLICATION
(19) INDIA
(22) Date of filing of Application :10/01/2020

(21) Application No.202021001256 A
(43) Publication Date : 16/07/2021

(54) Title of the invention : AN ANTI-ROLL BAR ASSEMBLY FOR A SUSPENSION SYSTEM OF A VEHICLE

(51) International classification	:B60G0021055000, B60G0017016000, B60G0021073000, B66C0001220000, F16B0035040000	(71)**Name of Applicant :** **1)TATA MOTORS LIMITED** Address of Applicant :Bombay House, 24 Homi Mody Street, Hutatma Chowk, Mumbai 400 001, Maharashtra, India Maharashtra India
(31) Priority Document No	:NA	(72)**Name of Inventor :**
(32) Priority Date	:NA	**1)P Prabhu Kumar**
(33) Name of priority country	:NA	**2)Kailas Ganpat Dhumal**
(86) International Application No	:NA	**3)Aditya Narayan Patra**
Filing Date	:NA	**4)Saurav Attri**
(87) International Publication No	: NA	**5)Atul Ramkrushna Kulkarni**
(61) Patent of Addition to Application Number	:NA	
Filing Date	:NA	
(62) Divisional to Application Number	:NA	
Filing Date	:NA	

(57) Abstract :
The present disclosure relates to a field of automobile engineering, particularly to an anti-roll assembly (100) of a suspension system of a vehicle. The assembly comprising, a torsion bar (10) defined with plurality of splines (11) on a first end (10a) and a second end (10b). Further a pair of arms (20a, 20b), each defined with connecting provision at first end (21a, 22a) and second end (21b, 22b). The connecting provision (21c,22c) in the first end of each of the of the pair of arms is configured to receive the torsion bar (10) and the connecting provision (21d, 22d) in the second end of each of the pair of arms is connectable to an axle (200) of the vehicle for allowing twisting moment of the assembly and prevent rolling of the vehicle. Further, each of the pair of arms are defined with hollow cross section. Figure 1

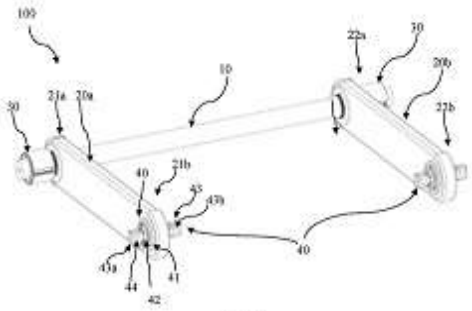

Figure 1

No. of Pages : 19 No. of Claims : 10

(12) PATENT APPLICATION PUBLICATION
(19) INDIA
(22) Date of filing of Application :10/01/2020

(21) Application No.202021001275 A
(43) Publication Date : 16/07/2021

(54) Title of the invention : SSYSTEM FOR CONTROLLED AND SECURED ACCESS OF AGRCULTURAL MACHINES

(51) International classification	:H04L0009320000, G06Q0050020000, A01B0079000000, A01B0069000000, G06Q0010060000	(71)**Name of Applicant :** **1)UPL Limited** Address of Applicant :UPL House, CTS No 610 B/2, Teacher's Colony, Bandra East, Mumbai, Maharashtra - 400051, India. Maharashtra India
(31) Priority Document No	:NA	(72)**Name of Inventor :**
(32) Priority Date	:NA	**1)DUSI, Naresh**
(33) Name of priority country	:NA	**2)JADHAV, Akshay**
(86) International Application No	:NA	
Filing Date	:NA	
(87) International Publication No	: NA	
(61) Patent of Addition to Application Number	:NA	
Filing Date	:NA	
(62) Divisional to Application Number	:NA	
Filing Date	:NA	

(57) Abstract :
The present disclosure relates to a system for controlled and secured access of agricultural machines, and user defined request for the agricultural machines and services. The system includes a control unit to connect and authenticate users/farmers and operators to the system. The control unit allows the system to receive and store user details, farm details, crops details, agrochemicals details and operator and agricultural machine details in to the system using mobile devices. The control unit allows users to raise agricultural machine and service request and further assigns operators to reach the user (farm) and perform agricultural services based on the service request, crop details, and farm details. The control unit can be operatively coupled to the agricultural machine and associated vehicles, and further configured to grant access and control of the agricultural machine and the vehicles to authorized operators only after a positive authentication of the operators and agrochemicals.

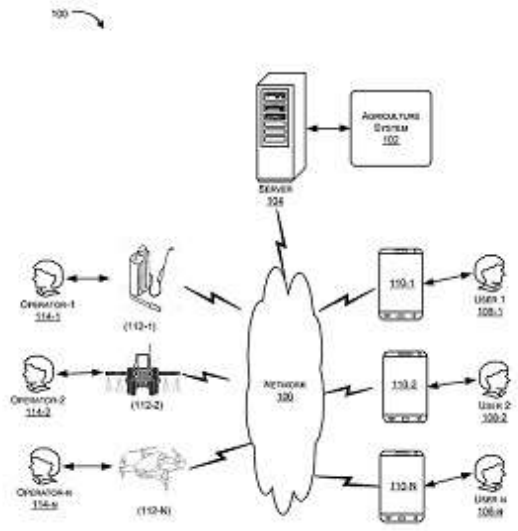

FIG. 1

No. of Pages : 34 No. of Claims : 10

(12) PATENT APPLICATION PUBLICATION
(19) INDIA
(22) Date of filing of Application :10/01/2020
(21) Application No.202021001276 A
(43) Publication Date : 16/07/2021

(54) Title of the invention : A STABLE AGROCHEMICAL COMPOSITION AND PROCESS FOR PREPARATION THEREOF

(51) International classification	:H01M0010440000, G11B0017049000, G03G0015080000, A24D0003060000, B65D0006220000	(71)**Name of Applicant :** **1)UPL Corporation Limited** Address of Applicant :5th Floor Newport Building, Louis Pasteur Street Port Louis, Mauritius. Mauritius
(31) Priority Document No	:NA	(72)**Name of Inventor :**
(32) Priority Date	:NA	**1)FERDINANDO MARCOS LIMA SILVA**
(33) Name of priority country	:NA	**2)GIUVAN LENZ**
(86) International Application No	:NA	**3)GANESH RAO**
Filing Date	:NA	
(87) International Publication No	: NA	
(61) Patent of Addition to Application Number	:NA	
Filing Date	:NA	
(62) Divisional to Application Number	:NA	
Filing Date	:NA	

(57) Abstract :
The present invention relates to a continuous process for preparation of a stable agrochemical composition in microreactor processing system. The present invention also provides a stable agrochemical composition having mean particle size distribution and method of controlling undesired vegetation with said composition.

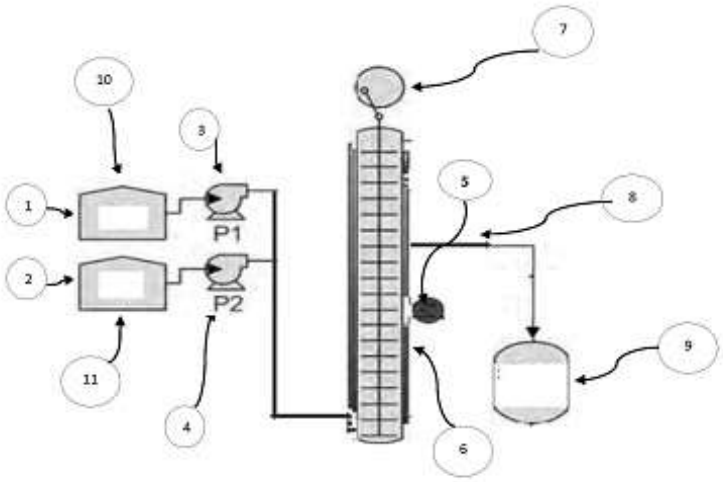

FIG. 1

No. of Pages : 52 No. of Claims : 19

(12) PATENT APPLICATION PUBLICATION
(19) INDIA
(22) Date of filing of Application :10/01/2020

(21) Application No.202021001286 A
(43) Publication Date : 16/07/2021

(54) Title of the invention : AN ERGONOMIC ARRANGEMENT FOR A GEAR SHIFT LEVER

(51) International classification	:F16H0059020000, F16H0059040000, F16H0061240000, F16H0061360000, F21V0019020000	(71)**Name of Applicant :** **1)TATA MOTORS LIMITED** Address of Applicant :Bombay House, 24 Homi Mody Street, Hutatma Chowk, Mumbai 400 001, Maharashtra, INDIA Maharashtra India
(31) Priority Document No	:NA	(72)**Name of Inventor :**
(32) Priority Date	:NA	**1)Saad Riaz**
(33) Name of priority country	:NA	**2)Chandrakant Lohani**
(86) International Application No	:NA	**3)Avinash Verma**
Filing Date	:NA	**4)Ganesh Dahibhate**
(87) International Publication No	: NA	
(61) Patent of Addition to Application Number	:NA	
Filing Date	:NA	
(62) Divisional to Application Number	:NA	
Filing Date	:NA	

(57) Abstract :
An ergonomic arrangement (100) for a gear shift lever (101) is disclosed. The arrangement (100) comprises a first bracket (3) with a socket (2). The socket (2) connects the first bracket (3) with a gear shaft (1). A second bracket (4) is positioned perpendicular to the first bracket (3). The second bracket (4) and the first bracket (3) are connectable through a central bolt (5). A position adjuster (6) defined with a plurality of provisions (12) is oriented in a horizontal direction and is connectable with the second bracket (4). A tube (8), slidably accommodating a threaded shaft (9), where the threaded shaft (9) is mounted with a gear knob (10). The plurality of provisions (12) of the position adjuster (6) facilitates change in position of the gear shift lever (101) in horizontal direction. The central bolt (5) is operable to adjust angular movement of the gear shift lever (101). Fig. 1 is the representative figure.

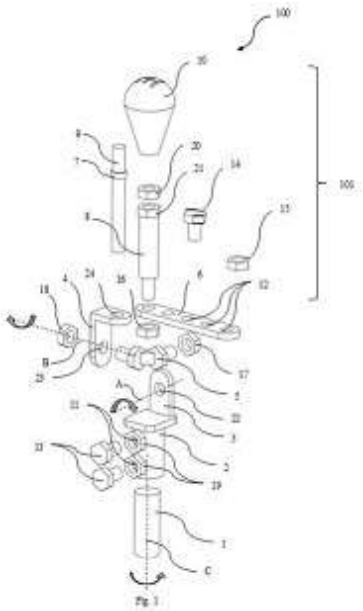

No. of Pages : 23 No. of Claims : 10

(12) PATENT APPLICATION PUBLICATION
(21) Application No.202021001288 A
(19) INDIA
(22) Date of filing of Application :11/01/2020
(43) Publication Date : 16/07/2021

(54) Title of the invention : USER-FRIENDLY AIR COOLER

(51) International classification	:F02B0029040000, F24F0006040000, F24F0005000000, C04B0007430000, A41D0003000000	(71)**Name of Applicant :** **1)RIYOTICS PRODUCTS AND SYSTEMS PRIVATE LIMITED** Address of Applicant :Plot No.1/A, Flat No-2/S, Govind Garden, Raisen Road, Bhopal, Madhya Pradesh, India P.I.N. 462021 Madhya Pradesh India
(31) Priority Document No	:NA	(72)**Name of Inventor :** **1)Riyaz Rafique**
(32) Priority Date	:NA	
(33) Name of priority country	:NA	
(86) International Application No	:NA	
Filing Date	:NA	
(87) International Publication No	: NA	
(61) Patent of Addition to Application Number	:NA	
Filing Date	:NA	
(62) Divisional to Application Number	:NA	
Filing Date	:NA	

(57) Abstract :
ABSTRACT USER-FRIENDLY AIR COOLER Embodiments of the present invention discloses a user-friendly air cooler (100) in which components and parts of air cooler can be opened, removed or are detachable for maintenance, cleaning, repairing and assembling with ease, less effort and in less time. Said air cooler (100) comprising at least a rear part (105) wherein said rear part (105) is adapted to be a single component which serves the purpose of left hand side component, right hand side component and rear component and at least a front part (104) wherein said front part (104) has at least an opening to exit cool air from said air cooler (100) and said front part (104) is adapted to be externally attached with top cover (108). Said air cooler (100) is assembled in at least one of the following way or combination thereof: a) said rear part 105 is adapted to be removable vertically pivoted with at least one side of said front part 104; b) said rear part 105 is adapted to be removable vertically pivoted with at least one side of intermediate part 103; c) said front part 104 is adapted to be removable horizontally pivoted with said bottom water tank 102; d) said front part 104 is adapted to be removable horizontally pivoted with intermediate part 103; e) said front part 104 is adapted to be removable horizontally pivoted with said rear part 105;

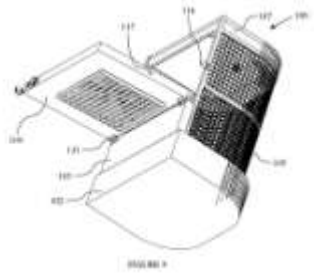

No. of Pages : 34 No. of Claims : 8

(12) PATENT APPLICATION PUBLICATION
(21) Application No.202021001289 A
(19) INDIA
(22) Date of filing of Application :11/01/2020
(43) Publication Date : 16/07/2021

(54) Title of the invention : WHEEL CHAIR ATTACHABLE E HAND BIKE

(51) International classification	:A61G0005100000, A61G0005120000, A61G0005040000, A61G0005020000, B62M0006600000
(31) Priority Document No	:NA
(32) Priority Date	:NA
(33) Name of priority country	:NA
(86) International Application No	:NA
Filing Date	:NA
(87) International Publication No	: NA
(61) Patent of Addition to Application Number	:NA
Filing Date	:NA
(62) Divisional to Application Number	:NA
Filing Date	:NA

(71)**Name of Applicant :**
1)Vishwajeet Ramrao Salokhe
Address of Applicant :Plot No.17,Chavan colony, near kalamba jail road, Salokhe Nagar, Kolhapur Maharashtra India
2)Pournima Shivaji Mohite
3)Akash Pratap Salokhe
4)Shubham Ashok Jankar
5)Hrishikesh Devendra Gaikwad
6)Anupam Suresh Bhojkar
(72)**Name of Inventor :**
1)Vishwajeet Ramrao Salokhe
2)Pournima Shivaji Mohite
3)Akash Pratap Salokhe
4)Shubham Ashok Jankar
5)Hrishikesh Devendra Gaikwad
6)Anupam Suresh Bhojkar

(57) Abstract :
Wheel chair is a mobility device designed for shifting patients, moving physically challenged people from one place to another with the help of attendee or by means of self propelling. The project involves simple design of wheelchair attached electric hand bike that can be attached to manual wheelchair for better mobility on road. The hand bike consists of electric bike motor, rechargeable battery, a controller electric throttle, and mechanical brakes. As made this bike from waste. The concept is best from waste, and is affordable for middle class peoples. The hand bikes are designed to be safe, light weight and aesthetic look. This electric hand bike can be easily detachable for wheelchair. This explains how an electric hand bike is made within limited budget for handicapped people.

Figure 01: Working System

No. of Pages : 7 No. of Claims : 5

(12) PATENT APPLICATION PUBLICATION
(21) Application No.202021001290 A
(19) INDIA
(22) Date of filing of Application :11/01/2020
(43) Publication Date : 16/07/2021

(54) Title of the invention : BIGDATA BASED HEALTHCARE SYSTEM

(51) International classification	:G06Q0050220000, G06Q0010060000, G06F0021620000, G16H0080000000, G06Q0010040000	(71)**Name of Applicant :** **1)Prof. VAISHALI B. BHAGAT** Address of Applicant :P. R. POTE COLLEGE OF ENGINEERING & MANAGEMENT KATHORA ROAD AMRAVATI Maharashtra India **2)DR.V.M.THAKARE** **3)Prof. S.V. DHOPTE**
(31) Priority Document No	:NA	
(32) Priority Date	:NA	
(33) Name of priority country	:NA	
(86) International Application No	:NA	
Filing Date	:NA	
(87) International Publication No	: NA	
(61) Patent of Addition to Application Number	:NA	
Filing Date	:NA	
(62) Divisional to Application Number	:NA	
Filing Date	:NA	
		(72)**Name of Inventor :** **1)Prof. VAISHALI B. BHAGAT** **2)DR.V.M.THAKARE** **3)Prof. S.V. DHOPTE**

(57) Abstract :
Information systems and computerization nowadays need very faster, secure & easier data analysis techniques. It is also required to maintain efficiency and accuracy in data analysis. So Bigdata systems have been continuously used for data analysis in various fields from medicine to organization and education to energy applications. Bigdata technology is rapidly gaining traction in healthcare industry as one of the most exciting technological developments. In particular, Bigdata technology presents numerous opportunities for healthcare industry such as reduced transaction costs, increased transparency for regulatory reporting, efficient healthcare data management and healthcare records universality as well as able to access data from any location. In the context of smart healthcare, bigdata may provide distinct benefits, particularly from a context-aware perspective where efficient and personalized solutions may be provided to citizens and the society in general. In this work, we are going to provide the system that can store the healthcare related data on virtual network so it can available to access anytime, anywhere with proper authentication. Also improve quality, safety, performance and accountability by maintaining healthcare data properly.

No. of Pages : 6 No. of Claims : 2

(12) PATENT APPLICATION PUBLICATION
(19) INDIA
(22) Date of filing of Application :12/01/2020
(21) Application No.202021001347 A
(43) Publication Date : 16/07/2021

(54) Title of the invention : A PROCESS FOR PREPARATION OF IMATINIB BY USING VILSMEIER REAGENT

(51) International classification	:C07H0005020000, C07D0263140000, C07D0209420000, C07C0051600000, C09D0201000000
(31) Priority Document No	:NA
(32) Priority Date	:NA
(33) Name of priority country	:NA
(86) International Application No	:NA
Filing Date	:NA
(87) International Publication No	: NA
(61) Patent of Addition to Application Number	:NA
Filing Date	:NA
(62) Divisional to Application Number	:NA
Filing Date	:NA

(71)**Name of Applicant :**
1)SAKAR HEALTHCARE LIMITED
Address of Applicant :406, SILVER OAKS COMM. COMPLEX, OPP. ARUN SOCIETY, PALDI, AHMEDABAD GUJARAT INDIA 380007 Gujarat India
(72)**Name of Inventor :**
1)GURUPRASAD RAMCHANDRA VADER
2)AARSH SANJAYBHAI SHAH

(57) Abstract :
ABSTRACT The present invention relates to a process of preparation of Imatinib, wherein said process comprises one or more steps of converting benzoic acid intermediate (formula 8) into Imatinib in presence of Vilsmeier reagent preferably under basic condition. Vilsmeier reagent in the present invention is prepared by reaction of chlorinating agent and catalyst. In a preferred embodiment Chlorinating agent is thionyl chloride and catalyst is dimethyl formamide.

No. of Pages : 19 No. of Claims : 16

(12) PATENT APPLICATION PUBLICATION
(19) INDIA
(22) Date of filing of Application :13/01/2020

(21) Application No.202021001362 A
(43) Publication Date : 16/07/2021

(54) Title of the invention : ANTI-CHEATING SYSTEM BASED ON INTERNET OF THINGS (IOT) •

(51) International classification	:H04L0029060000, G06F0021550000, A61B0005110000, G06N0003020000, G06Q0050060000	(71)**Name of Applicant :** **1)MESBRO TECHNOLOGIES PRIVATE LIMITED** Address of Applicant :Flat no C/904, Geomatrix Dev, Plot no 29, Sector 25, Kamothe, Raigarh-410209, Maharashtra, India Maharashtra India
(31) Priority Document No	:NA	(72)**Name of Inventor :**
(32) Priority Date	:NA	**1)Mr. Bhaskar Vijay Ajgaonkar**
(33) Name of priority country	:NA	
(86) International Application No	:NA	
Filing Date	:NA	
(87) International Publication No	: NA	
(61) Patent of Addition to Application Number	:NA	
Filing Date	:NA	
(62) Divisional to Application Number	:NA	
Filing Date	:NA	

(57) Abstract :
An anti-cheating system for detecting fraud persons is disclosed. The anti-cheating system comprising of; A database of the website for storing all the data of the players; A memory unit for storing instructions thereon, which are executed by the database of the website to cause the system to detect anomalies in activity on a computer network, based on received event data associated with the activity; generating anomaly data indicative of the anomalies in response to identify threat indicators by processing the anomaly data; generating threat indicator data indicative of the threat indicators in response to the security threat to the computer network by processing the threat indicator data; and A computer network for processing threat indicator data.

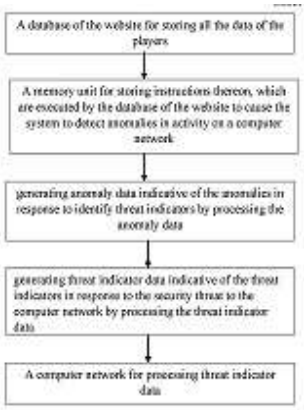

FIG 1

No. of Pages : 9 No. of Claims : 3

(12) PATENT APPLICATION PUBLICATION
(19) INDIA
(22) Date of filing of Application :13/01/2020

(21) Application No.202021001363 A
(43) Publication Date : 16/07/2021

(54) Title of the invention : SYSTEMS AND METHODS FOR CHECK OF ERASED INFORMATION FOR BLOCKCHAINS •

(51) International classification	:H04L0009320000, A63B0069360000, H04L0029080000, H04L0009060000, H01L0029423000	(71)**Name of Applicant :** **1)MESBRO TECHNOLOGIES PRIVATE LIMITED** Address of Applicant :Flat no C/904, Geomatrix Dev, Plot no 29, Sector 25, Kamothe, Raigarh-410209, Maharashtra, India Maharashtra India
(31) Priority Document No	:NA	(72)**Name of Inventor :**
(32) Priority Date	:NA	**1)Mr. Bhaskar Vijay Ajgaonkar**
(33) Name of priority country	:NA	
(86) International Application No	:NA	
Filing Date	:NA	
(87) International Publication No	: NA	
(61) Patent of Addition to Application Number	:NA	
Filing Date	:NA	
(62) Divisional to Application Number	:NA	
Filing Date	:NA	

(57) Abstract :
A blockchain preparing method and system for confirmation of erased information for blockchains. A thing of information is erased from a square of a blockchain by recognizing the square of the blockchain putting away the thing of information; erasing the thing of information from the distinguished square without erasing a hash esteem related with the erased thing of information from the distinguished square; and adding metadata to another square of the blockchain distinguishing the erased thing of information. The metadata incorporates a square identifier (ID) of the distinguished square as an area of the erased thing of information just as the hash esteem related with the erased thing of information. The square ID may involve a root hash in a square header of the distinguished square, all-around one of a kind identifier (UUID) assigned to the recognized square, or a counterbalance from the new square to the distinguished square.

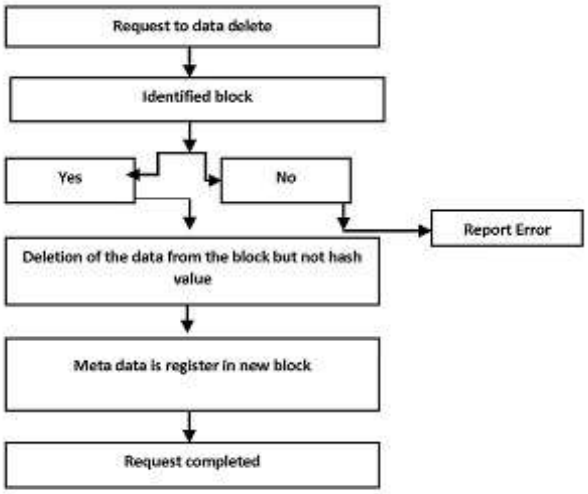

Fig: 1

No. of Pages : 11 No. of Claims : 5

(12) PATENT APPLICATION PUBLICATION
(19) INDIA
(22) Date of filing of Application :13/01/2020

(21) Application No.202021001364 A
(43) Publication Date : 16/07/2021

(54) Title of the invention : PLANTATION MONITORING SYSTEM BASED ON INTERNET OF THINGS (IOT) •

(51) International classification	:G08B0021020000, H04W0004380000, A01G0009240000, G08B0021200000, G06F0011300000	(71)**Name of Applicant :** **1)MESBRO TECHNOLOGIES PRIVATE LIMITED** Address of Applicant :Flat no C/904, Geomatrix Dev, Plot no 29, Sector 25, Kamothe, Raigarh-410209, Maharashtra, India Maharashtra India
(31) Priority Document No	:NA	(72)**Name of Inventor :**
(32) Priority Date	:NA	**1)Mr. Bhaskar Vijay Ajgaonkar**
(33) Name of priority country	:NA	
(86) International Application No	:NA	
Filing Date	:NA	
(87) International Publication No	: NA	
(61) Patent of Addition to Application Number	:NA	
Filing Date	:NA	
(62) Divisional to Application Number	:NA	
Filing Date	:NA	

(57) Abstract :
Accordingly, a system to provide plantation monitoring system which based on Internet of Things is disclosed. A plantation monitoring system comprising of; Storing the data in the database of the website; Data forming layer having sensor nodes with low power sensors for sampling environmental data such as soil humidity, soil temperature; sensors for collecting illumination data, sample atmospheric temperature and relative humidity; Transmitting the data from the monitoring site to the Internet within local area and for long distance; Transmitting sense data through the serial port to gateway using GPRS to transmit the data to the Internet; and accessing data from sensor via the database of the website by computer or mobile phone.

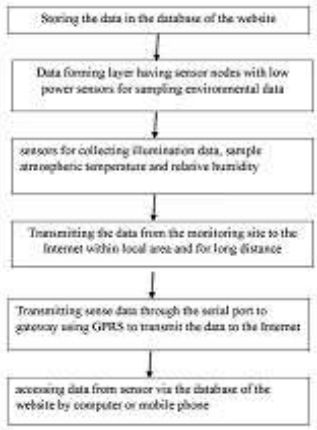

No. of Pages : 11 No. of Claims : 3

(12) PATENT APPLICATION PUBLICATION
(19) INDIA
(22) Date of filing of Application :13/01/2020

(21) Application No.202021001365 A
(43) Publication Date : 16/07/2021

(54) Title of the invention : SYSTEM AND METHOD FOR FOOD PRESERVATION USING INTERNET OF THINGS (IOT) •

(51) International classification	:H04L0029080000, F25D0029000000, A61B0017000000, G01K0001020000, F24F0011300000	(71)**Name of Applicant :** **1)MESBRO TECHNOLOGIES PRIVATE LIMITED** Address of Applicant :Flat no C/904, Geomatrix Dev, Plot no 29, Sector 25, Kamothe, Raigarh-410209, Maharashtra, India Maharashtra India
(31) Priority Document No	:NA	(72)**Name of Inventor :**
(32) Priority Date	:NA	**1)Mr. Bhaskar Vijay Ajgaonkar**
(33) Name of priority country	:NA	
(86) International Application No	:NA	
Filing Date	:NA	
(87) International Publication No	: NA	
(61) Patent of Addition to Application Number	:NA	
Filing Date	:NA	
(62) Divisional to Application Number	:NA	
Filing Date	:NA	

(57) Abstract :
The present invention discloses the system and method for food prevention using internet of things (IoT) technology. The food prevention application is installed at backend server. Temperature sensor and moisture sensor are installed inside the food vehicle. Wi-fi modem is installed for connectivity. At regular interval of time, sensor sense data and send it to cloud. At cloud if there are any changes in temperature and moisture data, the data is sent to backend server. At backend server application oreder to set temperature and moisture level as per standard to prevent food from spoiling. Temperature device and moisture device set temperature and moisture level as per order

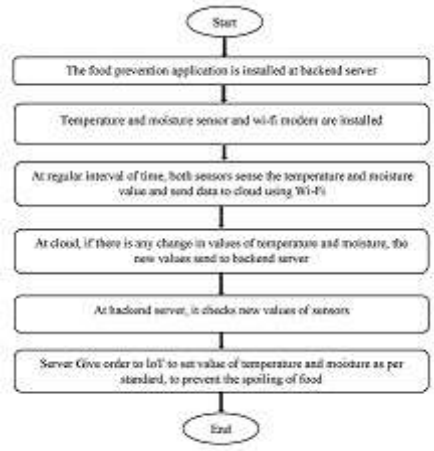

Fig. 1

No. of Pages : 8 No. of Claims : 5

(12) PATENT APPLICATION PUBLICATION
(19) INDIA
(22) Date of filing of Application :13/01/2020

(21) Application No.202021001366 A
(43) Publication Date : 16/07/2021

(54) Title of the invention : SYSTEM AND METHOD FOR REPAIRING THE COMPLEX MACHINE USING AUGMENTED REALITY TECHNOLOGY •

(51) International classification	:G06T0019000000, H04N0001000000, G06K0009320000, G06T0011600000, G06T0011000000	(71)**Name of Applicant :** **1)MESBRO TECHNOLOGIES PRIVATE LIMITED** Address of Applicant :Flat no C/904, Geomatrix Dev, Plot no 29, Sector 25, Kamothe, Raigarh-410209, Maharashtra, India Maharashtra India
(31) Priority Document No	:NA	(72)**Name of Inventor :**
(32) Priority Date	:NA	**1)Mr. Bhaskar Vijay Ajgaonkar**
(33) Name of priority country	:NA	
(86) International Application No	:NA	
Filing Date	:NA	
(87) International Publication No	: NA	
(61) Patent of Addition to Application Number	:NA	
Filing Date	:NA	
(62) Divisional to Application Number	:NA	
Filing Date	:NA	

(57) Abstract :
A system and method for repairing complex machine using augmented reality technology is disclosed. Application is installed on backend server. Any Augmented reality enabled electronic device is connected to sever. Repair team member wear AR enabled device. Choose the machine from the machine list for repairing. As soon as machine selected, team member goes to that machine where he can see the inner part of complex machine. And he can find problematic part of machine. Application suggest probable solution to the problem in minimum time.

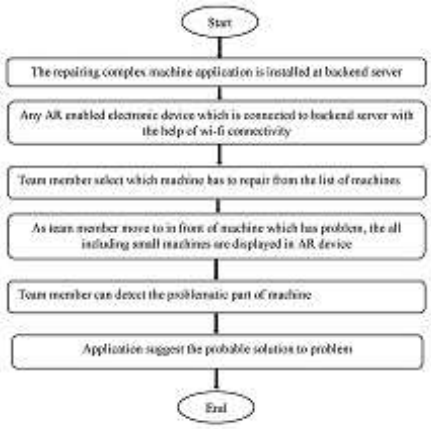

Fig. 1

No. of Pages : 8 No. of Claims : 3

(12) PATENT APPLICATION PUBLICATION
(21) Application No.202021001367 A
(19) INDIA
(22) Date of filing of Application :13/01/2020
(43) Publication Date : 16/07/2021

(54) Title of the invention : SMART HELMET IN CONSTRUCTION SITE BY USING INTERNET OF THINGS (IOT) •

(51) International classification	:H04L0029080000, H04L0009320000, A42B0003040000, G06Q0030020000, H04W0004800000	(71)**Name of Applicant :** **1)MESBRO TECHNOLOGIES PRIVATE LIMITED** Address of Applicant :Flat no C/904, Geomatrix Dev, Plot no 29, Sector 25, Kamothe, Raigarh-410209, Maharashtra, India Maharashtra India
(31) Priority Document No	:NA	(72)**Name of Inventor :**
(32) Priority Date	:NA	**1)Mr. Bhaskar Vijay Ajgaonkar**
(33) Name of priority country	:NA	
(86) International Application No	:NA	
Filing Date	:NA	
(87) International Publication No	: NA	
(61) Patent of Addition to Application Number	:NA	
Filing Date	:NA	
(62) Divisional to Application Number	:NA	
Filing Date	:NA	

(57) Abstract :
A system and method for smart helmet in construction site helmet by using internet of things (IoT) technology is disclosed. The smart helmet application is installed at backend server. At very initial stage, each and every helmet is attached to IoT enabled tag. Number of sensors are installed at construction site to form network which cover all construction site in under network. When accident happen, the supervisor can trace how many workers are present at accidental area and also all the information about them.

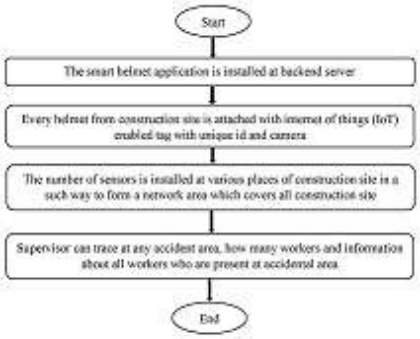

Fig. 1

No. of Pages : 8 No. of Claims : 4

(12) PATENT APPLICATION PUBLICATION
(19) INDIA
(22) Date of filing of Application :13/01/2020

(21) Application No.202021001368 A
(43) Publication Date : 16/07/2021

(54) Title of the invention : IOT BASED SOLUTION FOR MONITORING OF POLLUTION THROUGH PESTICIDE IN FRESH FRUITS AND VEGETABLE AVAILABLE IN MARKET •

(51) International classification	:A62D0101040000, G01N0021640000, G01N0033040000, A23L0005200000, A01N0025100000	(71)**Name of Applicant :** **1)MESBRO TECHNOLOGIES PRIVATE LIMITED** Address of Applicant :Flat no C/904, Geomatrix Dev, Plot no 29, Sector 25, Kamothe, Raigarh-410209, Maharashtra, India Maharashtra India
(31) Priority Document No	:NA	(72)**Name of Inventor :**
(32) Priority Date	:NA	**1)Mr. Bhaskar Vijay Ajgaonkar**
(33) Name of priority country	:NA	
(86) International Application No	:NA	
Filing Date	:NA	
(87) International Publication No	: NA	
(61) Patent of Addition to Application Number	:NA	
Filing Date	:NA	
(62) Divisional to Application Number	:NA	
Filing Date	:NA	

(57) Abstract :
A system for pesticide residue detection is disclosed. A system for pesticide residue detection comprising of; Sensor (detector system) which detects the pesticides percentage and indicates the pesticides present in fresh fruits and vegetables available in markets; a microcontroller is connected to computer gives for the output display; database of the website for giving an information about the pesticides, wherein the database of the website indicates the percentage that is present in the fruits and vegetables. So the pesticide residues concentration information can be collected.

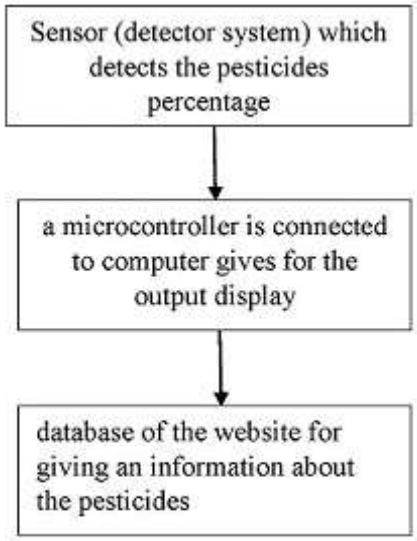

Fig 1

No. of Pages : 9 No. of Claims : 3

(12) PATENT APPLICATION PUBLICATION
(19) INDIA
(22) Date of filing of Application :13/01/2020

(21) Application No.202021001369 A
(43) Publication Date : 16/07/2021

(54) Title of the invention : SYSTEMS AND METHODS FOR ARTICLE CONFIRMATION AND VERIFICATION SYSTEM USING BLOCKCHAIN •

(51) International classification	:G06F0008410000, H04L0009320000, G06F0008300000, G06F0021600000, G06F0001160000	(71)**Name of Applicant :** **1)MESBRO TECHNOLOGIES PRIVATE LIMITED** Address of Applicant :Flat no C/904, Geomatrix Dev, Plot no 29, Sector 25, Kamothe, Raigarh-410209, Maharashtra, India Maharashtra India
(31) Priority Document No	:NA	(72)**Name of Inventor :**
(32) Priority Date	:NA	**1)Mr. Bhaskar Vijay Ajgaonkar**
(33) Name of priority country	:NA	
(86) International Application No	:NA	
Filing Date	:NA	
(87) International Publication No	: NA	
(61) Patent of Addition to Application Number	:NA	
Filing Date	:NA	
(62) Divisional to Application Number	:NA	
Filing Date	:NA	

(57) Abstract :
In certain models, an article may incorporate a layer having a first surface set apart with a first code. The article may incorporate a subsequent surface set apart with a subsequent code, the subsequent code darkened by the layer to be mixed up through the layer. The main code and the subsequent code might be related in exchange information put away by a blockchain oversaw by an agreement system of hubs.

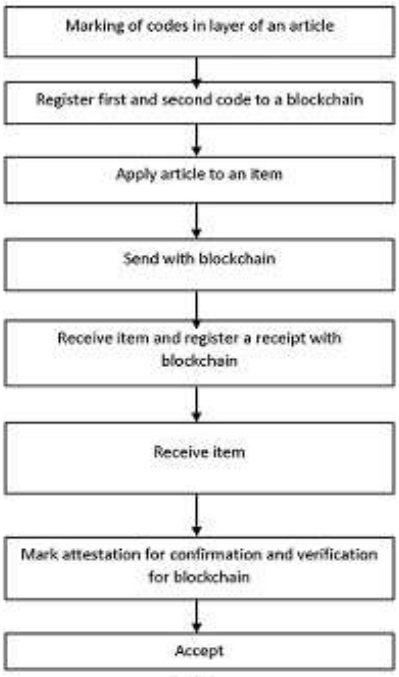

Fig: 1

No. of Pages : 11 No. of Claims : 4

(12) PATENT APPLICATION PUBLICATION
(19) INDIA
(22) Date of filing of Application :13/01/2020

(21) Application No.202021001370 A
(43) Publication Date : 16/07/2021

(54) Title of the invention : SYSTEM AND METHOD FOR FAST DELIVERY OF FOOD USING BIG DATA TECHNOLOGY •

(51) International classification	:G06Q0010080000, H04N0007180000, G06F0016951000, G06F0016290000, G06F0009440100	(71)**Name of Applicant :** **1)MESBRO TECHNOLOGIES PRIVATE LIMITED** Address of Applicant :Flat no C/904, Geomatrix Dev, Plot no 29, Sector 25, Kamothe, Raigarh-410209, Maharashtra, India Maharashtra India
(31) Priority Document No	:NA	(72)**Name of Inventor :**
(32) Priority Date	:NA	**1)Mr. Bhaskar Vijay Ajgaonkar**
(33) Name of priority country	:NA	
(86) International Application No	:NA	
Filing Date	:NA	
(87) International Publication No	: NA	
(61) Patent of Addition to Application Number	:NA	
Filing Date	:NA	
(62) Divisional to Application Number	:NA	
Filing Date	:NA	

(57) Abstract :
A system and method for fast delivery of food using big data technology is disclosed. The web application for food delivery is created. Delivery person check in website. And has to enter the destination address. Then search for best shortest route for entered destination address. The delivery person chooses shortest route. With help of big data delivery person choose best shortest route without any obstacles for delivering of food.

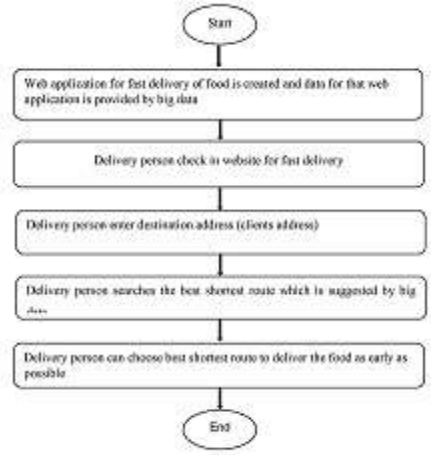

Fig. 1

No. of Pages : 8 No. of Claims : 4

(12) PATENT APPLICATION PUBLICATION
(21) Application No.202021001371 A
(19) INDIA
(22) Date of filing of Application :13/01/2020
(43) Publication Date : 16/07/2021

(54) Title of the invention : SYSTEM AND METHOD FOR FINDING CASUALTIES IN FIRE USING AUGMENTED REALITY TECHNOLOGY •

(51) International classification	:G06T0019000000, A62B0017000000, G06K0009460000, G06K0009200000, H04L0029080000	(71)**Name of Applicant :** **1)MESBRO TECHNOLOGIES PRIVATE LIMITED** Address of Applicant :Flat no C/904, Geomatrix Dev, Plot no 29, Sector 25, Kamothe, Raigarh-410209, Maharashtra, India Maharashtra India
(31) Priority Document No	:NA	(72)**Name of Inventor :**
(32) Priority Date	:NA	**1)Mr. Bhaskar Vijay Ajgaonkar**
(33) Name of priority country	:NA	
(86) International Application No	:NA	
Filing Date	:NA	
(87) International Publication No	: NA	
(61) Patent of Addition to Application Number	:NA	
Filing Date	:NA	
(62) Divisional to Application Number	:NA	
Filing Date	:NA	

(57) Abstract :
A system and method for finding causalities in fire using augmented reality technology is disclosed. Application is installed on backend server. Any Augmented reality enabled electronic device is connected to sever. Firefighter wear AR enabled device. Firefighter gets into the fire. Firefighter can see any causalities near to him with the help of Augmented Reality enabled device. Firefighter goes to causalities and help them to rescue without wasting a time.

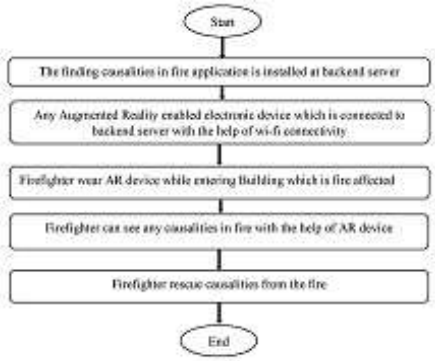

Fig. 1

No. of Pages : 8 No. of Claims : 5

(12) PATENT APPLICATION PUBLICATION
(19) INDIA
(22) Date of filing of Application :13/01/2020

(21) Application No.202021001375 A
(43) Publication Date : 16/07/2021

(54) Title of the invention : A SOLAR OPERABLE SYSTEM FOR COOKING AND WATER PURIFICATION

(51) International classification	:C02F0001760000, F24S0090000000, B01J0047140000, F24S0025200000, F24S0020000000	(71)**Name of Applicant :** **1)SHREE GAJANAN SOLAR TECH** Address of Applicant :Plot No. 47, Yeola Industries, Co-operative Estate Limited, Yeola, Dist: Nashik 423401, MH, India Maharashtra India
(31) Priority Document No	:NA	(72)**Name of Inventor :** **1)DAMRAL, Ajaykumar**
(32) Priority Date	:NA	
(33) Name of priority country	:NA	
(86) International Application No	:NA	
Filing Date	:NA	
(87) International Publication No	: NA	
(61) Patent of Addition to Application Number	:NA	
Filing Date	:NA	
(62) Divisional to Application Number	:NA	
Filing Date	:NA	

(57) Abstract :
The present invention is to provide a solar operable system for cooking and water purification 100. The system includes a photovoltaic module 200, a cabinet 110, a conduit 130 and a water purifying arrangement 140. The photovoltaic module 200 supplies energy to the system 100. The cabinet 110 has a heating surface 120, and the cabinet 110 is heated by a biomass fuel arranged below the cabinet 110 adjacent to the heating surface 120 of the cabinet 110. The conduit 130 has an inlet 130a and an outlet 130b. The conduit 130 encircles the cabinet 110 along an inner periphery for circulating water therethrough. The water purifying arrangement 140 is arranged adjacent to the outlet 130b of the conduit 130, the water inside the conduit 130 is treated by the water purifying arrangement 140. The water purifying arrangement 140 is operated by the energy acquired from the photovoltaic module 200. Figure 1

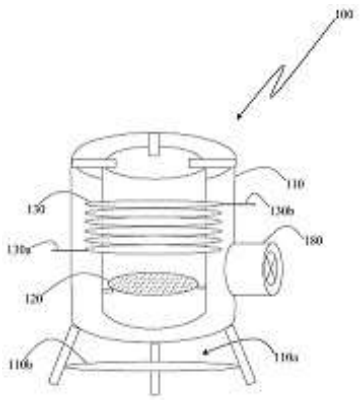

Figure 1

No. of Pages : 27 No. of Claims : 9

(12) PATENT APPLICATION PUBLICATION
(19) INDIA
(22) Date of filing of Application :13/01/2020

(21) Application No.202021001383 A
(43) Publication Date : 16/07/2021

(54) Title of the invention : A PROCESS FOR SYNTHESIZING A HYBRID WASHCOAT

(51) International classification	:B01J0037020000, B01D0053940000, B01J0037000000, B01D0053860000, B01J0035040000	(71)**Name of Applicant :** **1)Bharat Forge Limited** Address of Applicant :State Highway 5, Mundhwa Industrial Area, Mundhwa, Pune- 411036, Maharashtra, India Maharashtra India
(31) Priority Document No	:NA	(72)**Name of Inventor :**
(32) Priority Date	:NA	**1)Babasaheb Neelkanth Kalyani**
(33) Name of priority country	:NA	**2)Amit Kalyani**
(86) International Application No	:NA	**3)Krishnakumar Srinivasan**
Filing Date	:NA	**4)Sujatha Pushpakanth**
(87) International Publication No	: NA	**5)Dhanashri. K. Dhuri**
(61) Patent of Addition to Application Number	:NA	**6)Vijay Sinha Patil**
Filing Date	:NA	**7)S. Vijayanand**
(62) Divisional to Application Number	:NA	**8)Sharanya Prakash**
Filing Date	:NA	

(57) Abstract :
The present disclosure provides for a process for synthesizing a hybrid washcoat by microwave-irradiation. The process includes generating a washcoat slurry using nano sized platinum group metal and uniformly disposing the washcoat slurry onto a substrate to obtain a washcoated substrate. The process further includes microwave irradiation drying the washcoated substrate and coating one or more catalysts onto the washcoated substrate to obtain the one or more catalysts impregnated hybrid washcoat. The present disclosure also provides for a catalytic converter having coating of plurality of layers of one of a washcoat composition selected from a group. The process enables to reduce duration for one or more catalysts impregnation onto the hybrid washcoat and utilizes lesser platinum group metal as compared to conversional impregnation which in turns reduces the cost for conversion. The process provides better loading and uniform distribution of the one or more catalysts thereby enhancing performance. FIG. 1

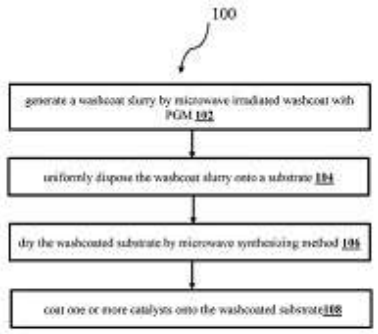

FIG 1

No. of Pages : 28 No. of Claims : 6

(12) PATENT APPLICATION PUBLICATION
(19) INDIA
(22) Date of filing of Application :13/01/2020

(21) Application No.202021001396 A
(43) Publication Date : 16/07/2021

(54) Title of the invention :SYSTEMS AND METHODS FOR INFORMATION CONTROL FOR OPTIMIZING ROUTE OF BLOCKCHAINS •

(51) International classification	:H04L0009320000, H04L0009060000, H04L0029060000, G06F0021640000, G11B0020120000	(71)**Name of Applicant :** **1)MESBRO TECHNOLOGIES PRIVATE LIMITED** Address of Applicant :Flat no C/904, Geomatrix Dev, Plot no 29, Sector 25, Kamothe, Raigarh-410209, Maharashtra, India Maharashtra India
(31) Priority Document No	:NA	(72)**Name of Inventor :** **1)Mr. Bhaskar Vijay Ajgaonkar**
(32) Priority Date	:NA	
(33) Name of priority country	:NA	
(86) International Application No	:NA	
Filing Date	:NA	
(87) International Publication No	: NA	
(61) Patent of Addition to Application Number	:NA	
Filing Date	:NA	
(62) Divisional to Application Number	:NA	
Filing Date	:NA	

(57) Abstract :
A method for producing a blockchain configured for immediate navigation includes: storing a blockchain made from a plurality of blocks, each block such as a header made from a quick flag, speedy reference, timestamp, and hash value, where the plurality of blocks includes preferred blocks having a deactivated speedy flag and fast blocks having an activated fast flag; figuring out a most recent speedy track block primarily based on the timestamp inside the fast blocks figuring out a most current typical block primarily based on the timestamp included inside the plurality of blocks generating a fast hash value through hashing the maximum current speedy track block producing a sequence hash price through hashing the most latest normal block and writing a brand new block to the blockchain together with a block header constructed from a timestamp, activated speedy flag, the fast music hash cost, and the chain hash value.

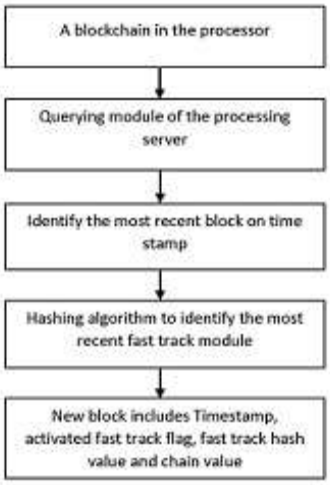

Fig: 1

No. of Pages : 11 No. of Claims : 3

(12) PATENT APPLICATION PUBLICATION
(19) INDIA
(22) Date of filing of Application :13/01/2020

(21) Application No.202021001397 A
(43) Publication Date : 16/07/2021

(54) Title of the invention : SYSTEM AND METHOD FOR JEWELLERY SHOPPING USING AUGMENTED REALITY TECHNOLOGY •

(51) International classification	:G06T0019000000, G06Q0030060000, G06F0003048200, G06T0019200000, A44C0005200000	(71)**Name of Applicant :** **1)MESBRO TECHNOLOGIES PRIVATE LIMITED** Address of Applicant :Flat no C/904, Geomatrix Dev, Plot no 29, Sector 25, Kamothe, Raigarh-410209, Maharashtra, India Maharashtra India
(31) Priority Document No	:NA	(72)**Name of Inventor :** **1)Mr. Bhaskar Vijay Ajgaonkar**
(32) Priority Date	:NA	
(33) Name of priority country	:NA	
(86) International Application No	:NA	
Filing Date	:NA	
(87) International Publication No	: NA	
(61) Patent of Addition to Application Number	:NA	
Filing Date	:NA	
(62) Divisional to Application Number	:NA	
Filing Date	:NA	

(57) Abstract :
The invention is the system and method of jewellery shopping using augmented reality technology. The web application of jewellery has been created. The user with high definition smart phone opens the application. Search for particular jewellery. And check suitability of jewellery on user™s body part using augmented reality technology. The three-dimensional view of jewellery is sent to the user™s graphical view of body where camera of smart phone is focused.

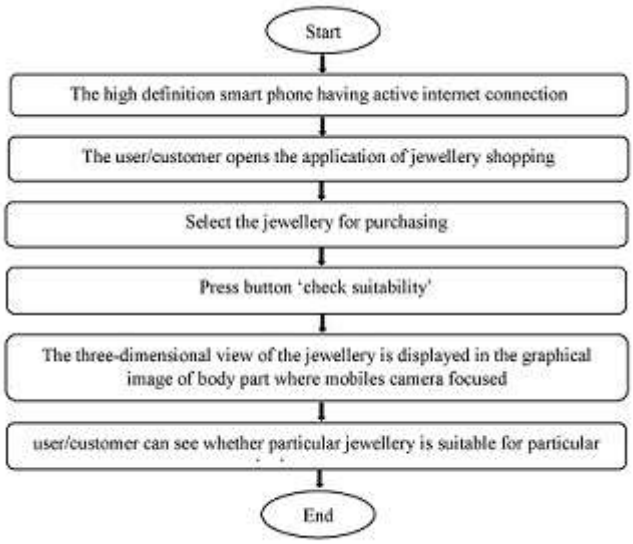

Fig. 1

No. of Pages : 9 No. of Claims : 4

(12) PATENT APPLICATION PUBLICATION
(19) INDIA
(22) Date of filing of Application :13/01/2020

(21) Application No.202021001398 A
(43) Publication Date : 16/07/2021

(54) Title of the invention : SYSTEM AND METHOD FOR MAINTENANCE OF THE COMPLEX AND HUGE MACHINE USING AUGMENTED REALITY TECHNOLOGY •

(51) International classification	:G06T0019000000, H04N0001000000, G06K0009200000, G06Q0010000000, G06Q0030060000	(71)**Name of Applicant :** **1)MESBRO TECHNOLOGIES PRIVATE LIMITED** Address of Applicant :Flat no C/904, Geomatrix Dev, Plot no 29, Sector 25, Kamothe, Raigarh-410209, Maharashtra, India Maharashtra India
(31) Priority Document No	:NA	(72)**Name of Inventor :**
(32) Priority Date	:NA	**1)Mr. Bhaskar Vijay Ajgaonkar**
(33) Name of priority country	:NA	
(86) International Application No	:NA	
Filing Date	:NA	
(87) International Publication No	: NA	
(61) Patent of Addition to Application Number	:NA	
Filing Date	:NA	
(62) Divisional to Application Number	:NA	
Filing Date	:NA	

(57) Abstract :
The system and method for maintenance of huge and complex machine using augmented reality technology is disclosed. Application is installed on backend server. Any Augmented reality enabled electronic device is connected to sever. Maintenance team member wear AR enabled device. Choose the machine from the machine list for maintenance. As soon as machine selected, team member goes to that machine where he can see the inner part of complex machine. And he can also see standard value or level of small machines. Team member start maintenance work without wasting time.

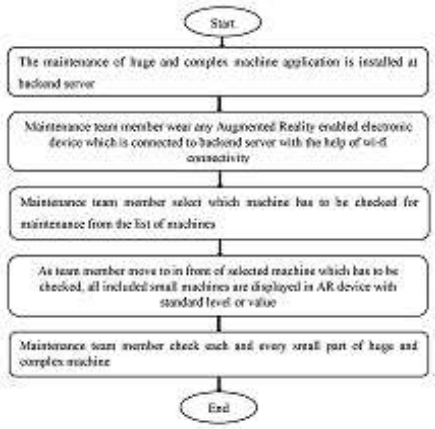

Fig. 1

No. of Pages : 8 No. of Claims : 3

(12) PATENT APPLICATION PUBLICATION
(19) INDIA
(22) Date of filing of Application :13/01/2020

(21) Application No.202021001399 A
(43) Publication Date : 16/07/2021

(54) Title of the invention : SYSTEM AND METHOD FOR ORDER MANAGEMENT SYSTEM USING BLOCKCHAIN TECHNOLOGY •

(51) International classification	:H04L0009320000, G06Q0030060000, H04L0029060000, H04N0009806000, H04L0009060000	(71)**Name of Applicant :** **1)MESBRO TECHNOLOGIES PRIVATE LIMITED** Address of Applicant :Flat no C/904, Geomatrix Dev, Plot no 29, Sector 25, Kamothe, Raigarh-410209, Maharashtra, India Maharashtra India
(31) Priority Document No	:NA	(72)**Name of Inventor :**
(32) Priority Date	:NA	**1)Mr. Bhaskar Vijay Ajgaonkar**
(33) Name of priority country	:NA	
(86) International Application No	:NA	
Filing Date	:NA	
(87) International Publication No	: NA	
(61) Patent of Addition to Application Number	:NA	
Filing Date	:NA	
(62) Divisional to Application Number	:NA	
Filing Date	:NA	

(57) Abstract :
The system and method for order management system by using blockchain technology is disclosed. Order management system application is installed on backend server. Team member must be authorised and have authentication to use application. Team member select order from order list and check its status. Status show which process has done and which are remaining. Application does not allow jumping to next process without completing previous one. Every order record is stored in database in cryptographic form. Hash is created for each order and block is attached to blockchain.

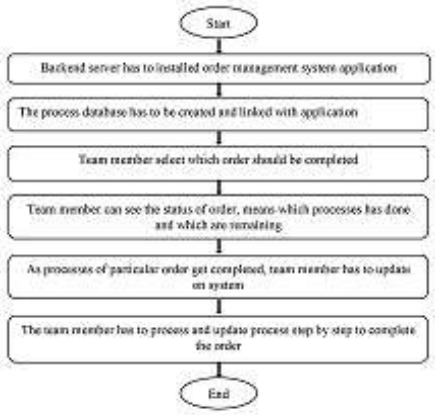

Fig. 1

No. of Pages : 9 No. of Claims : 4

(12) PATENT APPLICATION PUBLICATION
(19) INDIA
(22) Date of filing of Application :13/01/2020

(21) Application No.202021001400 A
(43) Publication Date : 16/07/2021

(54) Title of the invention :SYSTEMS AND METHODS FOR ACTUALIZING BLOCKCHAIN-BASED ADVANCED ENDORSEMENTS •

(51) International classification	:H04L0009320000, E05B0047000000, G06Q0010000000, H04L0009060000, D05B0019120000	(71)**Name of Applicant :** **1)MESBRO TECHNOLOGIES PRIVATE LIMITED** Address of Applicant :Flat no C/904, Geomatrix Dev, Plot no 29, Sector 25, Kamothe, Raigarh-410209, Maharashtra, India Maharashtra India
(31) Priority Document No	:NA	(72)**Name of Inventor :**
(32) Priority Date	:NA	**1)Mr. Bhaskar Vijay Ajgaonkar**
(33) Name of priority country	:NA	
(86) International Application No	:NA	
Filing Date	:NA	
(87) International Publication No	: NA	
(61) Patent of Addition to Application Number	:NA	
Filing Date	:NA	
(62) Divisional to Application Number	:NA	
Filing Date	:NA	

(57) Abstract :
Methods and systems, for actualizing PC programs encoded on PC stockpiling media, for executing computerized declarations. One of the methods incorporates creating an advanced endorsement; producing a computerized abstract of the advanced declaration; transmitting the computerized abstract of the computerized testament to at least one hubs of a blockchain for capacity in the blockchain; acquiring an exchange distinguishing proof related with putting away the computerized abstract of the computerized authentication in the blockchain; and partner a computerized imprint with the exchange ID.

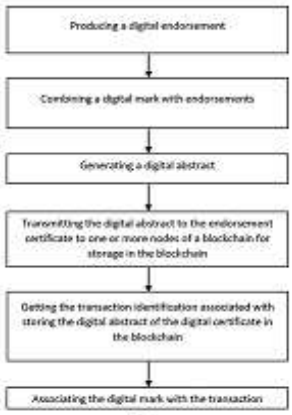

Fig: I

No. of Pages : 11 No. of Claims : 4

(12) PATENT APPLICATION PUBLICATION
(19) INDIA
(22) Date of filing of Application :13/01/2020

(21) Application No.202021001401 A
(43) Publication Date : 16/07/2021

(54) Title of the invention : SYSTEM AND METHOD FOR AUGMENTED REALITY BASED FIRE FIGHTER TRAINING •

(51) International classification	:G06T0019000000, A62C0099000000, G09B0019000000, G09B0009000000, G07F0017320000	(71)**Name of Applicant :** **1)MESBRO TECHNOLOGIES PRIVATE LIMITED** Address of Applicant :Flat no C/904, Geomatrix Dev, Plot no 29, Sector 25, Kamothe, Raigarh-410209, Maharashtra, India Maharashtra India
(31) Priority Document No	:NA	(72)**Name of Inventor :**
(32) Priority Date	:NA	**1)Mr. Bhaskar Vijay Ajgaonkar**
(33) Name of priority country	:NA	
(86) International Application No	:NA	
Filing Date	:NA	
(87) International Publication No	: NA	
(61) Patent of Addition to Application Number	:NA	
Filing Date	:NA	
(62) Divisional to Application Number	:NA	
Filing Date	:NA	

(57) Abstract :
The present invention discloses the system and method for augmented reality-based firefighter training. Application is installed on backend server. Any Augmented reality enabled electronic device is connected to sever and attached to helmet of firefighter. Firefighter wear AR enabled device. The videos from application start, which create real time scene in such way that, firefighter feel that he is in the fire situation. In this form the training is carried out.

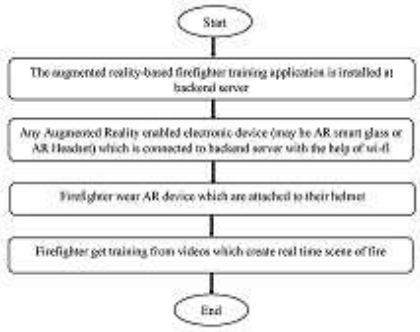

Fig. 1

No. of Pages : 8 No. of Claims : 3

(12) PATENT APPLICATION PUBLICATION
(19) INDIA
(22) Date of filing of Application :13/01/2020

(21) Application No.202021001405 A
(43) Publication Date : 16/07/2021

(54) Title of the invention : TOPICAL FORMULATION FOR THE TREATMENT OF VITILIGO •

(51) International classification	:A61K0009000000, A61K0047100000, A61K0031436000, A61K0047240000, A61K0038130000
(31) Priority Document No	:NA
(32) Priority Date	:NA
(33) Name of priority country	:NA
(86) International Application No	:NA
Filing Date	:NA
(87) International Publication No	: NA
(61) Patent of Addition to Application Number	:NA
Filing Date	:NA
(62) Divisional to Application Number	:NA
Filing Date	:NA

(71)**Name of Applicant :**
1)CADILA HEALTHCARE LIMITED
Address of Applicant :Zydus Corporate Park, Scheme No. 63, Survey No. 536, Khoraj (Gandhinagar), Nr. Vaishnodevi Circle, Sarkhej Gandhinagar Highway, Ahmedabad 382481, Gujarat, India Gujarat India
(72)**Name of Inventor :**
1)LADDHA, Ritu
2)UKAWALA, Mukesh
3)PATEL, Jitendra
4)SHARMA, Jaymeen

(57) Abstract :
ABSTRACT TOPICAL FORMULATION FOR THE TREATMENT OF VITILIGO • The present invention relates to a topical formulation comprising apremilast in the treatment of Vitiligo. Specifically the present invention relates to a topical solution comprising apremilast or its pharmaceutically acceptable salts. The composition of the present invention may be used alone or in combination with other systemic or topical therapies. Topical solution of apremilast as described in present invention is suitable for the treatment of Vitiligo.

No. of Pages : 15 No. of Claims : 9

(12) PATENT APPLICATION PUBLICATION
(19) INDIA
(22) Date of filing of Application :13/01/2020

(21) Application No.202021001421 A
(43) Publication Date : 16/07/2021

(54) Title of the invention : PROCESS OF PRODUCTION OF BIO-CNG FROM BIOGAS

(51) International classification	:H01M0010440000, G11B0017049000, G03G0015080000, A24D0003060000, B65D0006220000	(71)**Name of Applicant :** **1)Avinash G. Patil** Address of Applicant :J403, Pethkar Samrajya, Shivteerth Nagar, Kothrud Pune- 4110038, Maharashtra, India Maharashtra India **2)Satish Menon**
(31) Priority Document No	:NA	
(32) Priority Date	:NA	(72)**Name of Inventor :**
(33) Name of priority country	:NA	**1)Avinash G. Patil**
(86) International Application No	:NA	**2)Satish Menon**
Filing Date	:NA	
(87) International Publication No	: NA	
(61) Patent of Addition to Application Number	:NA	
Filing Date	:NA	
(62) Divisional to Application Number	:NA	
Filing Date	:NA	

(57) Abstract :
PROCESS OF PRODUCTION OF BIO-CNG FROM BIOGAS Abstract Disclosed is a process (100) of production of bio-CNG from a biogas. The process (100) provides multi stage filtration followed by low pressure amine treatment and polishing by iron turning and activated carbon. The wet biogas is then dehydrated by refrigeration and /or glycol dehydration. The process (100) is suitable for low pressure end-to-end treatment of the biogas. The process (100) is flexible and desired final purity is achieved by changing the composition/formulation of methyl diethanolamine and additives. The bio-CNG formed by the process (100) is useful for various purposes such as a replacement for CNG (natural gas) for industrial applications. Figure 1

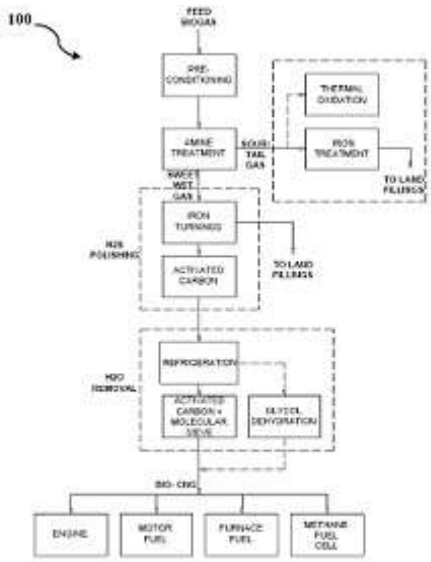

Figure 1

No. of Pages : 17 No. of Claims : 7

(12) PATENT APPLICATION PUBLICATION
(19) INDIA
(22) Date of filing of Application :13/01/2020

(21) Application No.202021001422 A
(43) Publication Date : 16/07/2021

(54) Title of the invention : A MODULAR PLANTER FOR COMPLETE GREEN WALL AND SYSTEM THEREOF

(51) International classification	:A01G0009020000, F21V0023060000, A01G0009033000, F21S0002000000, A61M0016080000	(71)**Name of Applicant :** **1)Ecogreen Landscape Technologies India Pvt. Ltd.** Address of Applicant :C 202, Anjor, Veerbhadra nagar, Baner, Pune, Maharashtra, India Maharashtra India
(31) Priority Document No	:NA	(72)**Name of Inventor :** **1)BARPANDE, Pradeep** **2)BARPANDE, Anuradha**
(32) Priority Date	:NA	
(33) Name of priority country	:NA	
(86) International Application No	:NA	
Filing Date	:NA	
(87) International Publication No	: NA	
(61) Patent of Addition to Application Number	:NA	
Filing Date	:NA	
(62) Divisional to Application Number	:NA	
Filing Date	:NA	

(57) Abstract :
Disclosed herein a modular light weight planter apparatus/modules and system (15) which is having greenery from all sides and also slender in thickness and at the same time good looking uniform size, strong and long lasting plant from every side of the planter.

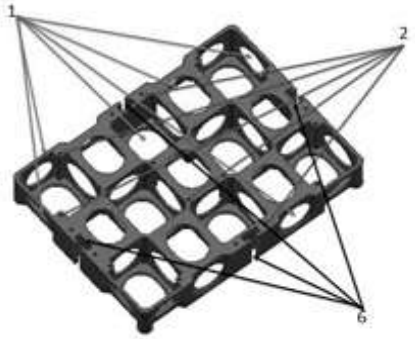

Figure 1

No. of Pages : 20 No. of Claims : 10

(12) PATENT APPLICATION PUBLICATION
(19) INDIA
(22) Date of filing of Application :13/01/2020

(21) Application No.202021001464 A
(43) Publication Date : 16/07/2021

(54) Title of the invention : FALSE TRIP PREVENTION OF TRANSFORMER DUE TO INRUSH CURRENT

(51) International classification	:H02H0007045000, H02H0001040000, H02H0001000000, H02H0007040000, H02H0009000000
(31) Priority Document No	:NA
(32) Priority Date	:NA
(33) Name of priority country	:NA
(86) International Application No	:NA
Filing Date	:NA
(87) International Publication No	: NA
(61) Patent of Addition to Application Number	:NA
Filing Date	:NA
(62) Divisional to Application Number	:NA
Filing Date	:NA

(71)**Name of Applicant :**
1)SHRI. RAMDEOBABA COLLEGE OF ENGINEERING AND MANAGEMENT
Address of Applicant :RAMDEO TEKDI, GITTIKHADAN, KATOL ROAD, NAGPUR-440 013, MAHARASHTRA, INDIA. Maharashtra India
2)VINAY TUKARAM BARHATE
(72)**Name of Inventor :**
1)VINAY TUKARAM BARHATE
2)SUDARSHAN RAJESH KHOND

(57) Abstract :
Proposed method detects low-magnitude -band in the current signal during Inrush condition and blocks tripping signals from differential relay during this inrush condition to avoid mal-operation of relay and hence unnecessary opening of circuit breaker in Power Transformer protection Schemes. This innovative method achieves the task of detection of Inrush current with the help of DSPIC controller that monitors primary current. The Current Transducer (CTR) LEM HXS 10-NP/SP3 is used for scaling current down for measurement purpose which is free of saturation issues. DSPIC controller reads instantaneous value of current from its internal ADC buffers and checks if small values of instantaneous differential current occur during a period of 20 milliseconds (for standard frequency of 50 Hz). Magnitude of this small value of instantaneous differential current and the minimum time duration corresponding to it is defined in the Code which effectively distinguishes peaky Inrush current having periodically occurring lows in magnitude from normal sinusoidal current wave. This enables algorithm to detect Magnetising Inrush current and block relaying signals during Inrush to avoid false tripping due to the Inrush current.

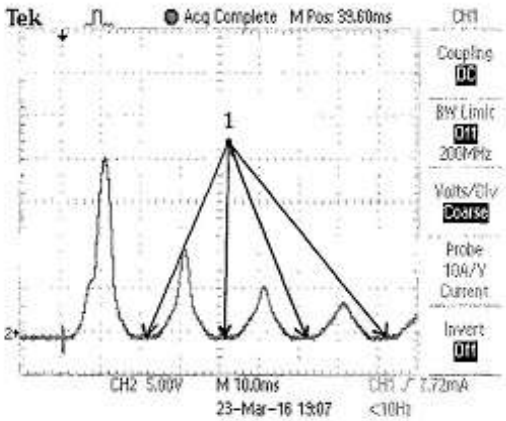

Fig.1: Positive Inrush

No. of Pages : 11 No. of Claims : 3

(12) PATENT APPLICATION PUBLICATION
(19) INDIA
(22) Date of filing of Application :13/01/2020

(21) Application No.202021001465 A
(43) Publication Date : 16/07/2021

(54) Title of the invention : SYSTEM AND METHOD FOR MONITORING HEALTH OF LOW-COST SENSORS USED IN SOIL MOISTURE MEASUREMENT

(51) International classification	:G01N0033240000, A01G0025160000, G01N0027040000, A01C0021000000, G01N0022040000
(31) Priority Document No	:NA
(32) Priority Date	:NA
(33) Name of priority country	:NA
(86) International Application No	:NA
Filing Date	:NA
(87) International Publication No	: NA
(61) Patent of Addition to Application Number	:NA
Filing Date	:NA
(62) Divisional to Application Number	:NA
Filing Date	:NA

(71)**Name of Applicant :**
1)Tata Consultancy Services Limited
Address of Applicant :Nirmal Building, 9th Floor, Nariman Point, Mumbai - 400021, Maharashtra, India Maharashtra India
(72)**Name of Inventor :**
1)JAIN, Prachin Lalit
2)BOSE CHOUDHURY, Swagatam
3)BHATT, Prakruti Vinodchandra
4)SARANGI, Sanat
5)PAPPULA, Srinivasu

(57) Abstract :
This disclosure relates generally to a system and method for monitoring performance of low-cost sensors plied in a field for soil moisture measurement. The low-cost sensors are calibrated to give useful derived parameters to support farming such as volumetric water content (VWC) of the soil. Further, the steps are being incorporated to de-noise their response to derive stable measurements similar to expensive rugged sensors. The calibration of the low-cost sensor and normalization of incoming values from the low-cost sensor are based on values determined through rugged sensors for soil moisture measurement. The normalization involves finding a minimum value and maximum value of soil moisture. Performance of the low-cost sensors are analyzed based on a range of values of the soil moisture. Finally, the performance analysis provides degradation stages and based on the degradation stages evaluated recommendations to modify the sensor are shared with the user.

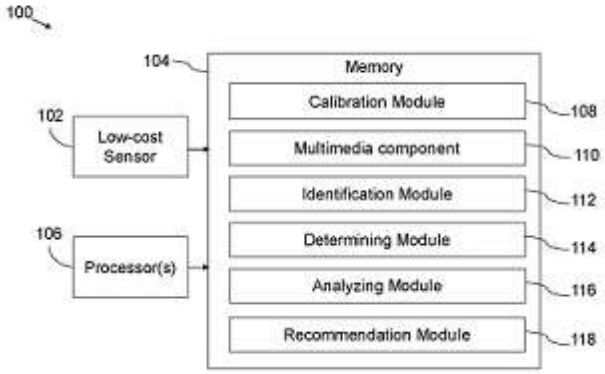

FIG. 1

No. of Pages : 23 No. of Claims : 10

(12) PATENT APPLICATION PUBLICATION
(19) INDIA
(22) Date of filing of Application :13/01/2020

(21) Application No.202021001471 A
(43) Publication Date : 16/07/2021

(54) Title of the invention : HOT TEAR TESTING SETUP FOR SS316L SAND CASTING DURING SOLIDIFICATION

(51) International classification	:G01L0005000000, G01N0033440000, B23K0031020000, G01N0019040000, G01M0017020000
(31) Priority Document No	:NA
(32) Priority Date	:NA
(33) Name of priority country	:NA
(86) International Application No	:NA
Filing Date	:NA
(87) International Publication No	: NA
(61) Patent of Addition to Application Number	:NA
Filing Date	:NA
(62) Divisional to Application Number	:NA
Filing Date	:NA

(71)**Name of Applicant :**
1)SHRI RAMDEOBABA COLLEGE OF ENGINEERING AND MANAGEMENT
Address of Applicant :RAMDEO TEKDI, GITTIKHADAN, KATOL ROAD, NAGPUR-440 013, MAHARASHTRA, INDIA. Maharashtra India
2)DR. SANJAY M. RANDIWE
(72)**Name of Inventor :**
1)SHRI RAMDEOBABA COLLEGE OF ENGINEERING AND MANAGEMENT
2)DR. SANJAY M. RANDIWE

(57) Abstract :
Hot tear, in the form of cracks, occurs at or above the solidus temperature during solidification of metal casting. The shapes and appearance of hot tear defects depend on both the local state of stress and interdendritic feeding. The susceptibility to hot tear of an alloy is influenced by solidification rate, micro structure, and the stress/strain conditions. Reliable quantitative measurement of hot tearing, as well as reliable modeling and prediction of hot tearing, will be of great value to the casting industry. In this invention the quantitative test using the method of constrained T-shape solidification shrinkage and inducing strain by pulling dendrites in a transverse direction. An experimental setup equipped with the real-time measuring of temperature, displacement, and contraction/ applied force during solidification at elevated temperature has been developed. In this test setup T-shape cavity casting was axially constrained by anchored bolts and load was applied using hydraulic jack until casting ruptured or tear, variation of load and contraction forces measured using S-type load cell, temperature history was recorded using K & B- type thermocouples. A data acquisition system is used to characterize and quantify the hot tearing during solidification.

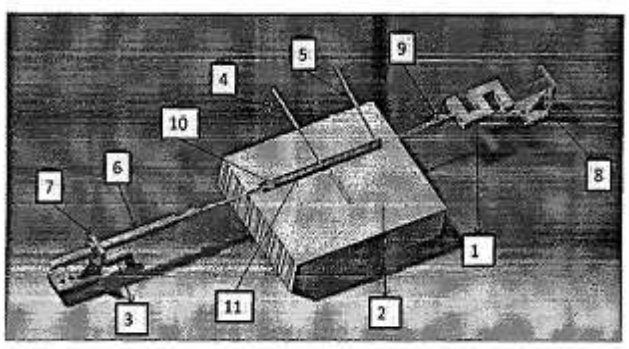

Figure 1 : Schematics of experimental setup of T-shape Casting.

No. of Pages : 16 No. of Claims : 7

(12) PATENT APPLICATION PUBLICATION
(21) Application No.202021001483 A
(19) INDIA
(22) Date of filing of Application :13/01/2020
(43) Publication Date : 16/07/2021

(54) Title of the invention : MODIFICATION IN PROPERTIES OF RESISTANCE SPOT WELDMENTS (COLD ROLLED MILD STEEL) WELDED WITH FILLER METAL (COLD ROLLED MILD STEEL) BY PREHEATING CYCLE

(51) International classification	:B23K0011110000, B23K0011160000, B23K0011250000, B23K0011340000, B23K0011100000	(71)**Name of Applicant :** **1)SUSHIL T AMBADKAR** Address of Applicant :PLOT NO 7, DATTATRAYA NAGAR, NAGPUR-440024 Maharashtra India **2)DR DEEPAK V BHOPE**
(31) Priority Document No	:NA	(72)**Name of Inventor :**
(32) Priority Date	:NA	**1)SUSHIL T AMBADKAR**
(33) Name of priority country	:NA	**2)DR DEEPAK V BHOPE**
(86) International Application No	:NA	
Filing Date	:NA	
(87) International Publication No	: NA	
(61) Patent of Addition to Application Number	:NA	
Filing Date	:NA	
(62) Divisional to Application Number	:NA	
Filing Date	:NA	

(57) Abstract :
CRASH PERFORMANCE OF A VEHICLE DIRECTLY DEPENDS ON AUTOMOTIVE BODY MATERIAL AND ITS FABRICATION METHOD. . RESISTANCE SPOT WELDING IS ONE OF THE QUICKEST AND CLEANEST WELDING PROCESSES AVAILABLE FOR JOINING AUTO-BODY. MECHANICAL BEHAVIOUR OF SPOT WELD CONTROLS PERFORMANCE OF VEHICLE BODY STRUCTURE IN CRASH.THE SPOT WELDING PROCESS IS USED DUE TO ITS HIGH PRODUCTIVITY, FLEXIBILITY, AND SUITABILITY. IN RESISTANCE SPOT WELDING, A SMALL WELD CALLED NUGGET IS FORMED BETWEEN TWO METAL WORK PIECES BY LOCALIZED MELTING DUE TO RESISTIVE HEATING CAUSED BY A FLOW OF ELECTRIC CURRENT. MILD STEEL IS MOST PREFERRED MATERIAL FOR AUTOMOTIVE STRUCTURES DUE TO ITS ECONOMY, EASY AVAILABILITY AND EXCELLENT MECHANICAL PROPERTIES.IT HAS BEEN PROVED THAT MECHANICAL PROPERTIES OF SPOT WELDMENTS CAN BE IMPROVED BY THE ADDITION OF SMALL QUANTITY OF FILLER METAL HEAT TREATMENT CYCLES LIKE PREHEATING ARE WELL KNOWN TO GIVE STABLE STUCTURES AND PHASES. MILD STEEL SPOT WELDING PROCESS WITH FILLER METAL AND SUITABLE PREHEAT CYCLE CAN GIVE AN EXCELLENT AND REASONABLY ECONOMICAL COMBINATION OF MECHANICAL PROPERTIES LIKE EXCELLENT STRENGTH TO WEIGHT RATIO WHICH IS ONE OF THE INDICATOR OF CRASH PERFORMANCE. THE EFFECTS OF PREHEAT CURRENT MODIFICATIONS ON THE RESISTANCE SPOT WELDING OF COLD ROLLED MILD STEEL STEEL SHEET ARE ANALYZED USING TENSILE TESTING. CORRELATIONS BETWEEN PREHEAT CURRENT MODIFICATION AND THE OBSERVED BREAKING STRENGTH IN THE WELD PROCESS ARE DISCUSSED. IN ADDITION, FILLER METAL ADDITION COUPLED WITH PREHEATING VARIATION IS EXAMINED IN RELATION TO BREAKING STRENGTH AND PLASTICITY.FILLER METAL ADDITION AND PREHEATING IS FOUND TO AFFECT BREAKING STRENGTH AND PLASTICITY.FAILURE MODE IS FOUND TO GET AFFECTED IN RESPONSE TO CHANGES IN PREHEATING CYCLE.PREHEATING IS FOUND TO MAKE THE PHASES MORE STABLE AND LESS RESPONSIVE TO HEAT TRAETMENT.

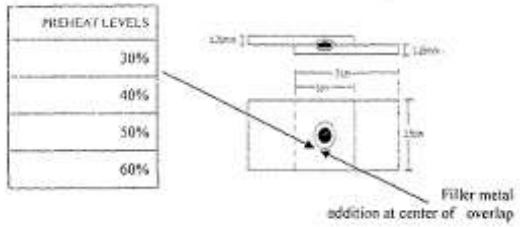

No. of Pages : 5 No. of Claims : 1

(12) PATENT APPLICATION PUBLICATION
(21) Application No.202021001500 A
(19) INDIA
(22) Date of filing of Application :13/01/2020
(43) Publication Date : 16/07/2021

(54) Title of the invention : A SEAT ASSEMBLY FOR A VEHICLE

(51) International classification	:H04N0019105000, G06K0015020000, A61Q0017040000, H04N0019167000, A61K0031198000	(71)**Name of Applicant :** **1)Magna Automotive India Private Limited** Address of Applicant :Om Chambers, 701, T-29/31, Bhosari Industrial Estate, Bhosari, Pune 411026, India Maharashtra India (72)**Name of Inventor :** **1)Prasad Balkrishna Ghalsasi** **2)Dinesh Uttamrao Ambekar** **3)Avadhoot Sunil Kulkarni**
(31) Priority Document No	:NA	
(32) Priority Date	:NA	
(33) Name of priority country	:NA	
(86) International Application No	:NA	
Filing Date	:NA	
(87) International Publication No	: NA	
(61) Patent of Addition to Application Number	:NA	
Filing Date	:NA	
(62) Divisional to Application Number	:NA	
Filing Date	:NA	

(57) Abstract :
[0001] Embodiment herein provide a seat assembly (100) for a vehicle. The seat assembly (100) comprising a seatback (1), a first recliner bracket (2) pivotally connected to the seatback (1), a recliner (3) pivotally connected to a second recliner bracket (4), a hockey stick assembly (7) pivotally connected to the seatback (1) and the first recliner bracket (2) through the recliner (3) and the second recliner bracket (4), a cushion bracket (5) of a cushion seat pivotally connected to the hockey stick assembly (7) and the second bracket assembly (4) through a free pivot joint, a recliner release lever (11) provided to operate the recliner (3) for folding of the seatback (1), and a towel bar (12) to slide the cushion seat on a track (9), wherein the cushion bracket (5) and the hockey stick assembly (7) slide along with the track (9). FIG. 1

FIG. 1

No. of Pages : 22 No. of Claims : 7

(12) PATENT APPLICATION PUBLICATION
(19) INDIA
(22) Date of filing of Application :13/01/2020

(21) Application No.202021001502 A
(43) Publication Date : 16/07/2021

(54) Title of the invention : PROCESS FOR PREPARATION OF FOSNETUPITANT •

(51) International classification	:C07F0009090000, C07F0009650900, C07F0009655800, A61K0009190000, A61K0031473000
(31) Priority Document No	:NA
(32) Priority Date	:NA
(33) Name of priority country	:NA
(86) International Application No	:NA
Filing Date	:NA
(87) International Publication No	: NA
(61) Patent of Addition to Application Number	:NA
Filing Date	:NA
(62) Divisional to Application Number	:NA
Filing Date	:NA

(71)**Name of Applicant :**
1)CADILA HEALTHCARE LIMITED
Address of Applicant :Zydus Corporate Park, Scheme No. 63, Survey No. 536, Khoraj (Gandhinagar), Nr. Vaishnodevi Circle, Sarkhej Gandhinagar Highway, Ahmedabad 382481, Gujarat, India Gujarat India

(72)**Name of Inventor :**
1)SINGH, Kumar Kamlesh
2)DESAI, Sanjay Jagdish
3)PATEL, Jagdish Maganbhai
4)VYAS, Chirag Jayantilal
5)SOLANKI, Dhaval Jashwantlal
6)DHANANI, Sudhir Ganpatbhai

(57) Abstract :
ABSTRACT PROCESS FOR PREPARATION OF FOSNETUPITANT • The present invention relates to a process for the preparation of fosnetupitant. The invention further relates to an amorphous fosnetupitant chloride hydrochloride and process for the preparation thereof.

No. of Pages : 17 No. of Claims : 13

(12) PATENT APPLICATION PUBLICATION
(19) INDIA
(22) Date of filing of Application :13/01/2020

(21) Application No.202021001503 A
(43) Publication Date : 16/07/2021

(54) Title of the invention : A GEAR SHIFT INHIBITOR ASSEMBLY FOR A TRANSMISSION OF A VEHICLE

(51) International classification	:F16H0061280000, F16H0059040000, F16H0063460000, F16H0061240000, F16H0061040000	(71)**Name of Applicant :** **1)TATA MOTORS LIMITED** Address of Applicant :Bombay House, 24 Homi Mody Street, Hutatma Chowk, Mumbai 400 001, Maharashtra, India Maharashtra India
(31) Priority Document No	:NA	(72)**Name of Inventor :**
(32) Priority Date	:NA	**1)Hiralkumar Ghanshyambhai Patel**
(33) Name of priority country	:NA	**2)Yogesh Manohar Tongaonkar**
(86) International Application No	:NA	**3)Vikas Balakrishna Bhosale**
Filing Date	:NA	
(87) International Publication No	: NA	
(61) Patent of Addition to Application Number	:NA	
Filing Date	:NA	
(62) Divisional to Application Number	:NA	
Filing Date	:NA	

(57) Abstract :
The present disclosure discloses a gear shift inhibitor assembly for a transmission of a vehicle. The gear shift inhibitor assembly comprises an inhibitor block, defined with a plurality of protrusions. The inhibitor block is coupled to an actuator, and the actuator is communicatively coupled to the control unit. The control unit is configured to generate an input signal for operating the actuator, to selectively displace the inhibitor block to a desired gate position, to engage at least one protrusion of the plurality of protrusions with at least one gate defined in a guide plate, for arresting movement of a gear engagement member to the at least one gate. Arresting the movement of the gear engagement member, within the guide plate prevents inadvertent shifting of gears of the transmission. Figures. 2 and 4 are the representative figures.

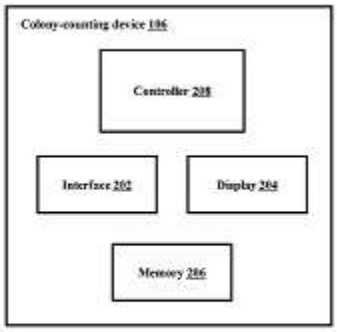

FIG. 2

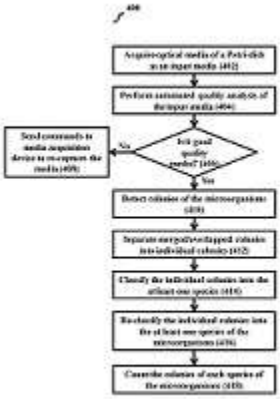

FIG. 4

No. of Pages : 24 No. of Claims : 9

(12) PATENT APPLICATION PUBLICATION
(19) INDIA
(22) Date of filing of Application :13/01/2020

(21) Application No.202021001509 A
(43) Publication Date : 16/07/2021

(54) Title of the invention : METHODS AND SYSTEMS FOR AUTOMATED COUNTING AND CLASSIFYING MICROORGANISMS

(51) International classification	:C12Q0001060000, C12Q0001040000, G06K0009000000, C12M0001340000, C12M0001000000	(71)**Name of Applicant :** **1)AIRAMATRIX PRIVATE LIMITED** Address of Applicant :801, Dosti Pinnacle, Road No.22, Wagle Industrial Estate, MIDC, Thane (W), Maharashtra, 400604 Maharashtra India
(31) Priority Document No	:NA	(72)**Name of Inventor :**
(32) Priority Date	:NA	**1)Ameya Dilip Deshpande**
(33) Name of priority country	:NA	**2)Dinisha Suresh Kadam**
(86) International Application No	:NA	**3)Geetank Raipuria**
Filing Date	:NA	
(87) International Publication No	: NA	
(61) Patent of Addition to Application Number	:NA	
Filing Date	:NA	
(62) Divisional to Application Number	:NA	
Filing Date	:NA	

(57) Abstract :
ABSTRACT Methods and systems for automated counting and classifying microorganisms. A method disclosed herein includes receiving and analyzing quality of at least one input media of at least one incubated dish used for growth of the colonies of the microorganisms. The method further includes detecting the colonies of the microorganisms in a growth medium disposed on the dish if the received at least one media is a good quality media, wherein the detected colonies include at least one of individual colonies and grouped colonies. The method further includes segregating the grouped colonies into the individual colonies. The method further includes classifying the individual colonies into at least one species of the microorganisms. The method further includes counting the colonies of each species. FIG. 4

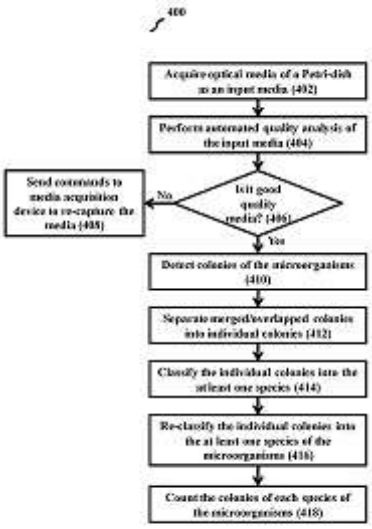

FIG. 4

No. of Pages : 59 No. of Claims : 28

(12) PATENT APPLICATION PUBLICATION
(19) INDIA
(22) Date of filing of Application :13/01/2020

(21) Application No.202021001521 A
(43) Publication Date : 16/07/2021

(54) Title of the invention : SOLAR TRACKER CONTROLLER SYSTEM

(51) International classification	:F24S0030000000, H02S0020320000, F24S0030425000, B81C0001000000, G05B0015020000	
(31) Priority Document No	:NA	
(32) Priority Date	:NA	
(33) Name of priority country	:NA	
(86) International Application No	:NA	
Filing Date	:NA	
(87) International Publication No	: NA	
(61) Patent of Addition to Application Number	:NA	
Filing Date	:NA	
(62) Divisional to Application Number	:NA	
Filing Date	:NA	

(71)**Name of Applicant :**
1)Noccarc Robotics Private Limited
Address of Applicant :4, BRADY GLADY'S PLAZA, 1/447 SENAPATI BAPAT MARG, LOWER PAREL, MUMBAI MAHARASHTRA Maharashtra India
(72)**Name of Inventor :**
1)HARSHIT RATHORE
2)NIKHIL KURELE
3)MAYUR RAJABHAU CHATE
4)SAMAR AHMAD NAJAMI

(57) Abstract :
Described herein is a solar tracker controller system 100 and a method for sequentially controlling multiple solar tracker tables T1 to Tn of a solar power system. A processor 102 is provided that is configured to select one or more solar tracker tables T1 to Tn to be controlled by actuating a multiplexing unit, and calculate a desired position of the one or more selected solar tracker tables T1 to Tn. A motor driver is provided to supply a voltage to the solar tracker tables T1 to Tn sequentially for controlling the movement of the solar tracker tables T1 to Tn about one or more axes based on the desired position calculated by the processor 102. Refer Figure 3

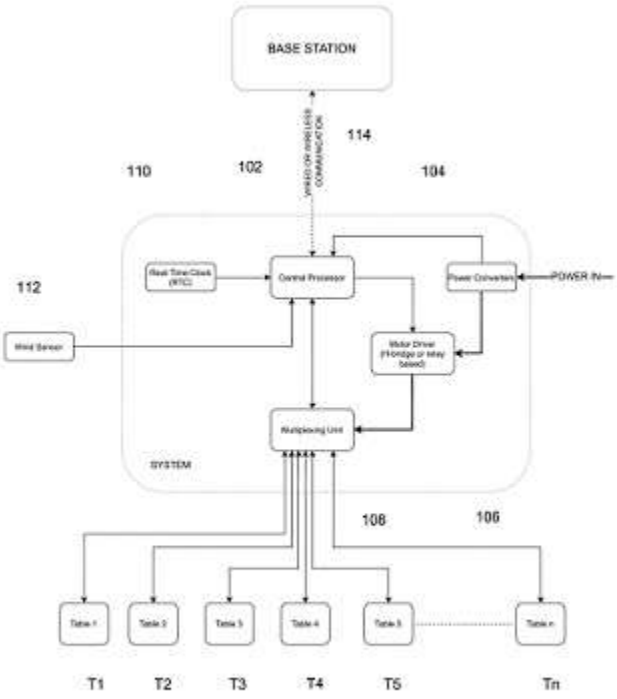

FIGURE 3

No. of Pages : 25 No. of Claims : 10

(12) PATENT APPLICATION PUBLICATION
(19) INDIA
(22) Date of filing of Application :13/01/2020
(21) Application No.202021001532 A
(43) Publication Date : 16/07/2021

(54) Title of the invention : AN ABRASIVE FILM GUIDE MECHANISM FOR A MICRO-FINISHING MACHINE

(51) International classification	:H01M0010440000, G11B0017049000, G03G0015080000, A24D0003060000, B65D0006220000	(71)**Name of Applicant :** **1)Maximus Technologies** Address of Applicant :5-9-105, PAGARIYA COLONY, RAILWAY STATION ROAD, AURANGABAD-431005, MAHARASHTRA, India Maharashtra India
(31) Priority Document No	:NA	(72)**Name of Inventor :**
(32) Priority Date	:NA	**1)KULKARNI, Onkar Rajesh**
(33) Name of priority country	:NA	**2)KELKAR, Sameer**
(86) International Application No	:NA	
Filing Date	:NA	
(87) International Publication No	: NA	
(61) Patent of Addition to Application Number	:NA	
Filing Date	:NA	
(62) Divisional to Application Number	:NA	
Filing Date	:NA	

(57) Abstract :
ABSTRACT AN ABRASIVE FILM GUIDE MECHANISM FOR A MICRO-FINISHING MACHINE The present disclosure discloses an abrasive film guide mechanism configured to be attached to a micro-finishing machine. The abrasive film guide mechanism comprises at least one front guide (102) configured to be attached to the micro-finishing machine and at least one rear guide (104, 106) configured to be attached to the micro-finishing machine. Each of the front guide (102) and the rear guide (104, 106) is produced as a single component by additive manufacturing process.

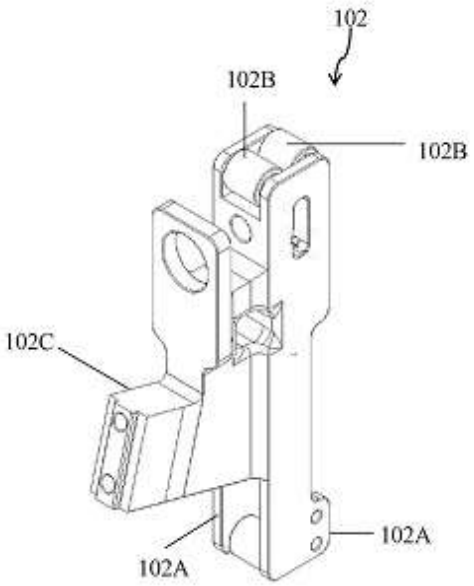

FIGURE 2A

No. of Pages : 23 No. of Claims : 7

(12) PATENT APPLICATION PUBLICATION
(19) INDIA
(22) Date of filing of Application :13/01/2020

(21) Application No.202021001547 A
(43) Publication Date : 16/07/2021

(54) Title of the invention : METHODS AND SYSTEMS FOR AUTOMATIC EXTRACTION OF SELF-REPORTED ACTIVITIES OF AN INDIVIDUAL

(51) International classification	:G06F0017270000, G06F0017240000, G06F0017280000, G06F0016000000, G09B0019000000	(71)**Name of Applicant :** **1)Tata Consultancy Services Limited** Address of Applicant :Nirmal Building, 9th Floor, Nariman Point Mumbai 400021 Maharashtra, India Maharashtra India
(31) Priority Document No	:NA	(72)**Name of Inventor :** **1)ADIGA, Deepa**
(32) Priority Date	:NA	**2)BHAVSAR, Maitry**
(33) Name of priority country	:NA	**3)DUGGIRALA, Mayuri**
(86) International Application No	:NA	**4)PATEL, Sachin**
Filing Date	:NA	
(87) International Publication No	: NA	
(61) Patent of Addition to Application Number	:NA	
Filing Date	:NA	
(62) Divisional to Application Number	:NA	
Filing Date	:NA	

(57) Abstract :
This disclosure relates generally to methods and systems for automatic extraction of self-reported activities of an individual from a freestyle narrative text. Manual extraction of such self-reported activities of the individual from the freestyle narrative text over the period of time is a complex task and consume a significant amount of time. The present systems and methods utilize a predefined grammar pattern and a natural language processing technique to generate one or more candidate activity phrases, from the pre-processed input text posted by the individual. A deep learning based supervised classification model is utilized to automatically extract the one or more self-reported activities of the individual, from the one or more candidate activity phrases. Manual intervention and efforts of analyzing the freestyle narrative text to extract the self-reported activities are avoided. Longitudinal assessment of the self-reported activities may reveal routines and behavior of the individual. [To be published with FIG. 3]

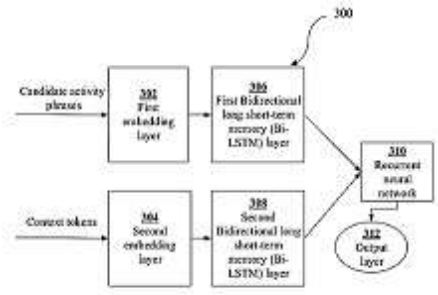

FIG.3

No. of Pages : 40 No. of Claims : 20

(12) PATENT APPLICATION PUBLICATION
(21) Application No.202021001569 A
(19) INDIA
(22) Date of filing of Application :14/01/2020
(43) Publication Date : 16/07/2021

(54) Title of the invention : AUTO REVERSIBLE PLOUGH MECHANISM.

(51) International classification	:A01B0015080000, A01B0017000000, A01B0015100000, A01B0003460000, A01B0015200000	(71)**Name of Applicant :** **1)HARESH HARJIVANBHAI VASIYANI** Address of Applicant :PATEL AGRO INDUSTRIES, NEAR URMI OIL MILL, PANCHASAR ROAD, WANKANER, DIST. MORBI, GUJARAT, INDIA - 363 621. Gujarat India
(31) Priority Document No	:NA	(72)**Name of Inventor :** **1)HARESH HARJIVANBHAI VASIYANI**
(32) Priority Date	:NA	
(33) Name of priority country	:NA	
(86) International Application No	:NA	
Filing Date	:NA	
(87) International Publication No	: NA	
(61) Patent of Addition to Application Number	:NA	
Filing Date	:NA	
(62) Divisional to Application Number	:NA	
Filing Date	:NA	

(57) Abstract :
The present invention relates to the Auto reversible plough mechanism which is attachable to the agricultural vehicles operated i.e. tractor mould board plough. Farmers not need to reverse agricultural equipment mould board plough by hand pulling and they can do ploughing easily. Farmers will get rid out from problems with the waist and shoulders. Then working efficiency of the farmers will be increased and they can ploughing for long time. The present invention, No need of hydraulic control system to reverse agriculture equipment mould board plough means it is saving from extra cost.

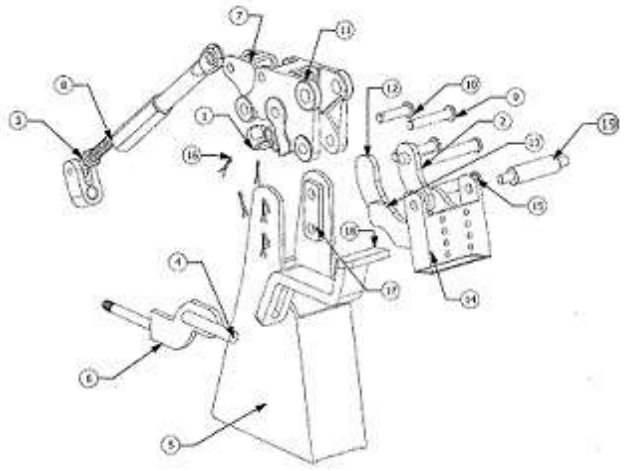

No. of Pages : 11 No. of Claims : 13

(12) PATENT APPLICATION PUBLICATION
(19) INDIA
(22) Date of filing of Application :14/01/2020
(21) Application No.202021001583 A
(43) Publication Date : 16/07/2021

(54) Title of the invention : HYBRID MIXER FOR SELECTIVE CATALYTIC REDUCTION SYSTEM IN LIGHT& DUTY VEHICLE.

(51) International classification	:F01N0003200000, B60G0009000000, B01D0053940000, B60T0013660000, C11D0001660000	(71)**Name of Applicant :** **1)VE COMMERCIAL VEHICALES LTD.** Address of Applicant :102, INDUSTRIAL AREA 1, PITHAMPUR, DISTRICT DHAR, MADHYA PRADESH,INDIA, PIN CODE: 454775 Madhya Pradesh India
(31) Priority Document No	:NA	(72)**Name of Inventor :**
(32) Priority Date	:NA	**1)SACHIN AGARWAL**
(33) Name of priority country	:NA	**2)HEMANTKUMAR MOHANLAL RATHI**
(86) International Application No	:NA	**3)SAURAV ROY**
Filing Date	:NA	**4)HARDIK NARENDRABHAI LAKHLANI**
(87) International Publication No	: NA	**5)ASHOK PATIDAR**
(61) Patent of Addition to Application Number	:NA	
Filing Date	:NA	
(62) Divisional to Application Number	:NA	
Filing Date	:NA	

(57) Abstract :
The present invention discloses a hybrid mixer for selective catalytic reduction system for light duty vehicle comprising 1) comprising a transparent outer shell; a tube is having two side-cuts and a centrally cut S-plate to maximize the gas flow in bottom plate of said hybrid mixer resultant increases in gas flow from 7 Kg/hr to 56 Kg/hr at the bottom of hybrid mixer. Here the gas flow through a slot of tube and S-plate is diverted in mixing chamber in a systematic way to maintain a uniform temperature of the bottom plate of the hybrid mixer, during urea dosing (to counter quenching effect) help in better contact of exhaust gases to the bottom plate of the hybrid mixer result in to creating swirl action, helping in higher urea injection (UI) and multiple iterations performed to achieve desired or optimum outcome. The present invention also discloses a method of manufacturing the hybrid mixer for selective catalytic reduction system for light duty vehicle.

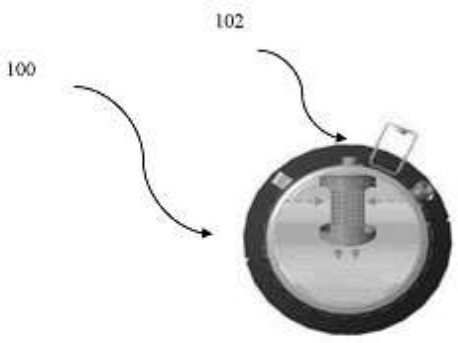

FIGURE 1

No. of Pages : 20 No. of Claims : 7

(12) PATENT APPLICATION PUBLICATION
(19) INDIA
(22) Date of filing of Application :14/01/2020
(21) Application No.202021001584 A
(43) Publication Date : 16/07/2021

(54) Title of the invention :PROTECTION SYSTEM FOR NOX SENSOR".

(51) International classification	:F01N0013000000, F01N0003080000, F02D0041220000, F02D0041140000, B01D0053260000	(71)**Name of Applicant :** **1)VE COMMERCIAL VEHICLES LTD.** Address of Applicant :102, INDUSTRIAL AREA 1, PITHAMPUR-454 775, DIST.: DHAR, MADHYA PRADESH, INDIA Madhya Pradesh India
(31) Priority Document No	:NA	(72)**Name of Inventor :**
(32) Priority Date	:NA	**1)SACHIN AGARWAL**
(33) Name of priority country	:NA	**2)HEMANTKUMAR MOHANLAL RATHI**
(86) International Application No	:NA	**3)SAURAV ROY**
Filing Date	:NA	**4)SHARAD MUKATI**
(87) International Publication No	: NA	
(61) Patent of Addition to Application Number	:NA	
Filing Date	:NA	
(62) Divisional to Application Number	:NA	
Filing Date	:NA	

(57) Abstract :
The present invention discloses a protection system for NOx sensor comprising (a) a cap configured to engage with NOx sensor and act as a mounting feature (b) an integrated tube configured to engage with the cap to ensure NOx sensor functionality (minimum flow criteria) (c) a NOx sensor protection cover to protect from water traces or water splash. The present invention also discloses a method of manufacturing the protection system for NOx sensor.

FIGURE 1

No. of Pages : 11 No. of Claims : 5

(12) PATENT APPLICATION PUBLICATION
(19) INDIA
(22) Date of filing of Application :14/01/2020
(21) Application No.202021001585 A
(43) Publication Date : 16/07/2021

(54) Title of the invention :2-PIECE MIXING CHAMBER FOR SELECTING CATALYTIC REDUCTION SYSTEM IN HEAVY DUTY VEHICLE"

(51) International classification	:F01N0003200000, B60G0009000000, B60K0017100000, B60T0013660000, B60K0006120000	(71)**Name of Applicant :** **1)VE COMMERCIAL VEHICLES LTD.** Address of Applicant :102, INDUSTRIAL AREA 1, PITHAMPUR-454 775, DIST.: DHAR, MADHYA PRADESH, INDIA Madhya Pradesh India
(31) Priority Document No	:NA	(72)**Name of Inventor :**
(32) Priority Date	:NA	**1)SACHIN AGARWAL**
(33) Name of priority country	:NA	**2)HEMANTKUMAR MOHANLAL RATHI**
(86) International Application No	:NA	**3)SAURAV ROY**
Filing Date	:NA	**4)MAYANK MUDGAL**
(87) International Publication No	: NA	
(61) Patent of Addition to Application Number	:NA	
Filing Date	:NA	
(62) Divisional to Application Number	:NA	
Filing Date	:NA	

(57) Abstract :
The present invention discloses a 2-piece mixing chamber for selective catalytic reduction system for the heavy-duty commercial vehicle comprising a solid tube portion and a perforated tube portion. Here the 2-piece mixing chamber is characterized by its separation into 2 part, thereby easy to clean the box muffler as compared to existing box muffler having welded one-piece mixing chamber. Here the one end of the solid tube portion of the 2-piece mixing chamber is welded with box muffler and the other end is connected to perforated tube portion. Also, the perforated tube portion of the 2-piece mixing chamber is mounted to box muffler™s external body through graphite gasket and bolts to effectively control the leak rate of the 2-piece mixing chamber system less than

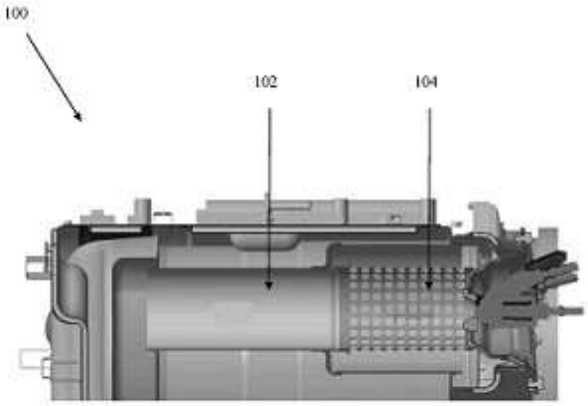

FIGURE 1

No. of Pages : 15 No. of Claims : 10

(12) PATENT APPLICATION PUBLICATION
(19) INDIA
(22) Date of filing of Application :14/01/2020

(21) Application No.202021001586 A
(43) Publication Date : 16/07/2021

(54) Title of the invention :AUTOMATIC DETECTION DEVICE FOR AUTOMOBILE"

(51) International classification	:G06T0007000000, H04N0005380000, G08G0001160000, G08G0001040000, H03L0007080000	(71)**Name of Applicant :** **1)VE COMMERCIAL VEHICLES LTD.** Address of Applicant :102, INDUSTRIAL AREA 1, PITHAMPUR-454 775, DIST.: DHAR, MADHYA PRADESH,INDIA Madhya Pradesh India
(31) Priority Document No	:NA	(72)**Name of Inventor :** **1)PIYUSH GOUR**
(32) Priority Date	:NA	
(33) Name of priority country	:NA	
(86) International Application No	:NA	
Filing Date	:NA	
(87) International Publication No	: NA	
(61) Patent of Addition to Application Number	:NA	
Filing Date	:NA	
(62) Divisional to Application Number	:NA	
Filing Date	:NA	

(57) Abstract :
ABSTRACT The present invention relates to an automatic sensor-based detection device or system to detect the missing part or component of the cabin of the vehicle or truck comprising a detection sensor unit to detect the missing part or component of the cabin of the truck; a control unit; an indicator; a buzzer unit; a display unit and a combination thereof.

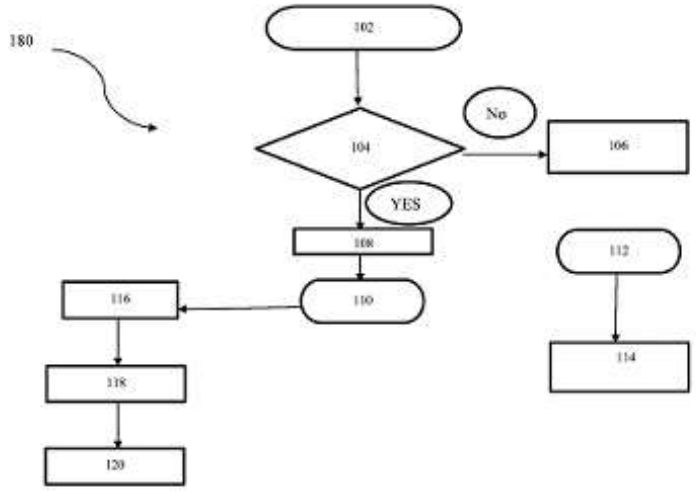

FIGURE 1

No. of Pages : 11 No. of Claims : 7

(12) PATENT APPLICATION PUBLICATION
(21) Application No.202021001598 A
(19) INDIA
(22) Date of filing of Application :14/01/2020
(43) Publication Date : 16/07/2021

(54) Title of the invention :ARRANGEMENT FOR REUSE OF HOUSEHOLD WASTE WATER FOR FLUSHING OF TOILETS".

(51) International classification	:C02F0001280000, E03B0007040000, H04W0084040000, H02J0003140000, C02F0001320000	(71)**Name of Applicant :** **1)KISHOR UDHAORAO GANDHARE** Address of Applicant :21-RESHMA RESIDENCY, LANE NO.-3, RAMKRISHNA PARAMHANSA NAGAR, KOTHRUD,PUNE,MAHRASHTRA,INDIA, PIN CODE: 411038 Maharashtra India **2)HARSHA KISHOR GANDHARE**
(31) Priority Document No	:NA	
(32) Priority Date	:NA	
(33) Name of priority country	:NA	(72)**Name of Inventor :**
(86) International Application No	:NA	**1)KISHOR UDHAORAO GANDHARE**
Filing Date	:NA	**2)HARSHA KISHOR GANDHARE**
(87) International Publication No	: NA	
(61) Patent of Addition to Application Number	:NA	
Filing Date	:NA	
(62) Divisional to Application Number	:NA	
Filing Date	:NA	

(57) Abstract :
The highlight and focus of the research work is to reduce the demand of fresh potable water i.e. supplying potable water to more people by reuse of water. The domain of the research is the addition of small arrangement in the existing water supply and drainage system of the building to reuse the less contaminated water during its household use. In this research work the main aim is to make water available to mass of population getting added newly to each metropolitan city; Thus reducing the extra thrust on existing water supply system. The addition of small arrangement in construction of buildings can reduce the demand of potable water by around 30%. This will give positive impact on water management of metropolitan cities, reduces water born diseases due to availability of potable water to mass of society and good health of population.

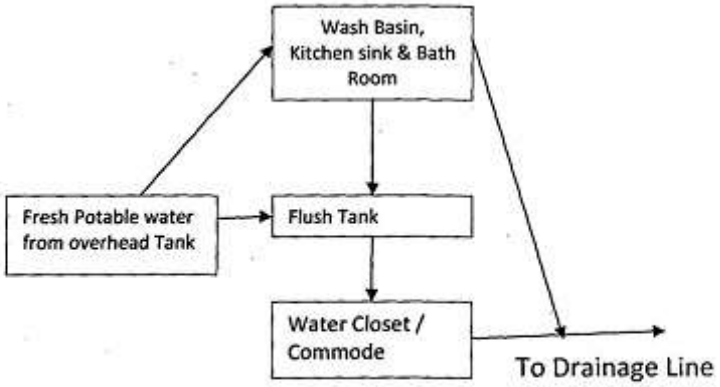

Fig. No. 1 Existing Water supply and Drainage Arrangement

No. of Pages : 13 No. of Claims : 5

(12) PATENT APPLICATION PUBLICATION
(19) INDIA
(22) Date of filing of Application :14/01/2020

(21) Application No.202021001668 A
(43) Publication Date : 16/07/2021

(54) Title of the invention : INTERLOCKING TRI LEGGED BRICK.

(51) International classification	:E04B0002020000, E04B0002140000, E04B0002120000, E04F0013080000, E04B0002060000	(71)**Name of Applicant :** **1)SHANTILAL SHAH ENGINEERING COLLEGE** Address of Applicant :NEW SIDSAR CAMPUS, POST: VARTEJ, SIDSAR, BHAVNAGAR-364 060, GUJARAT, INDIA. Gujarat India
(31) Priority Document No	:NA	(72)**Name of Inventor :**
(32) Priority Date	:NA	**1)SOLANKI DIPEN NARENDRAKUMAR**
(33) Name of priority country	:NA	**2)PUROHIT BHARGAV BHAVESHBHAI**
(86) International Application No	:NA	**3)GOHIL PRANAVKUMAR NARANBHAI**
Filing Date	:NA	**4)RATHOD AMIT GHANSHYAMBHAI**
(87) International Publication No	: NA	**5)SONI NAYANKUMAR PRAVINCHANDRA**
(61) Patent of Addition to Application Number	:NA	**6)DR. RAJESH KUMAR JAIN**
Filing Date	:NA	
(62) Divisional to Application Number	:NA	
Filing Date	:NA	

(57) Abstract :
This Invention is used for masonry work of a building. The interlocking tri leg brick consist of three square legs which are arranged in zig-zag manner on either side of the brick, so as to assure the interlocking of the brick, while used in rows. It follows the traditional mode of masonry work. Because of its innovative shape, it has good interlocking system. Interlocking legs makes the bondage of the masonry work effective, stronger and with less possibility of crack in work. There is no need of any other binding material to make joints between them. This specialty makes it unique and more effective than the other bricks.

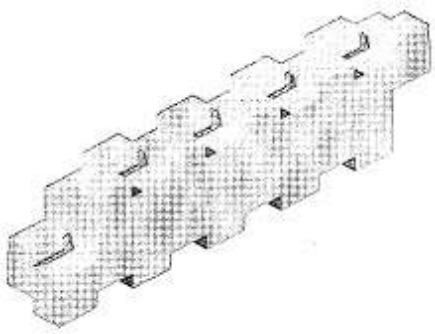

Figure 1

No. of Pages : 15 No. of Claims : 7

(12) PATENT APPLICATION PUBLICATION
(19) INDIA
(22) Date of filing of Application :14/01/2020

(21) Application No.202021001713 A
(43) Publication Date : 16/07/2021

(54) Title of the invention : A METHOD FOR MONITORING CONCENTRATION OF LUBRICANT IN A WHEEL HUB AND SYSTEM THEREOF

(51) International classification	:B23Q0011100000, B60T0008000000, F16C0033660000, F15B0021080000, G01D0021000000	(71)**Name of Applicant :** **1)TATA MOTORS LIMITED** Address of Applicant :Bombay House, 24 Homi Mody Street, Hutatma Chowk, Mumbai. Maharashtra 400001, India Maharashtra India
(31) Priority Document No	:NA	(72)**Name of Inventor :**
(32) Priority Date	:NA	**1)Ravindra Narayanrao Babhulkar**
(33) Name of priority country	:NA	**2)Pradeep Shivaji Bhilare**
(86) International Application No	:NA	
Filing Date	:NA	
(87) International Publication No	: NA	
(61) Patent of Addition to Application Number	:NA	
Filing Date	:NA	
(62) Divisional to Application Number	:NA	
Filing Date	:NA	

(57) Abstract :
The present disclosure discloses a system (100) and a method of monitoring concentration of a lubricant in a wheel hub (1) of a vehicle. The method includes the steps of receiving a signal corresponding to condition of a lubricant in the wheel hub (1), by a control unit (2), from one or more sensors (3). The control unit (2) is further configured to compare the condition of the lubricant in the wheel hub (1) corresponding to the signal with one or more predetermined characteristics of the lubricant. The control unit (2) is also configured to actuate a cooling apparatus (4) to impinge a predetermined quantity of coolant onto the wheel hub (1) based on the comparison, wherein the coolant is configured to freeze the lubricant. This way, characteristics of the lubricant may be adequately improved to enhance service life of the lubricant. Figure 1 is a representative figure.

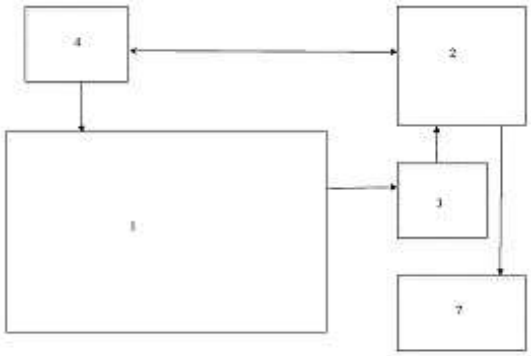

Figure 1a

No. of Pages : 21 No. of Claims : 14

(12) PATENT APPLICATION PUBLICATION
(19) INDIA
(22) Date of filing of Application :14/01/2020

(21) Application No.202021001718 A
(43) Publication Date : 16/07/2021

(54) Title of the invention : SYSTEMS AND METHODS FOR PERFORMING INCLUSIVE INDOOR NAVIGATION

(51) International classification	:H01M0010440000, G11B0017049000, G03G0015080000, A24D0003060000, B65D0006220000
(31) Priority Document No	:NA
(32) Priority Date	:NA
(33) Name of priority country	:NA
(86) International Application No	:NA
Filing Date	:NA
(87) International Publication No	: NA
(61) Patent of Addition to Application Number	:NA
Filing Date	:NA
(62) Divisional to Application Number	:NA
Filing Date	:NA

(71)**Name of Applicant :**
1)Tata Consultancy Services Limited
Address of Applicant :Nirmal Building, 9th Floor, Nariman Point Mumbai 400021 Maharashtra, India Maharashtra India
(72)**Name of Inventor :**
1)JADHAV, Charudatta
2)RAJPUT, Govind
3)HARSHAVARDHAN, Achampet

(57) Abstract :
ABSTRACT SYSTEMS AND METHODS FOR PERFORMING INCLUSIVE INDOOR NAVIGATION This disclosure relates to systems and methods for performing inclusive indoor navigation. State of the art systems and methods require extra hardware and fail to provide accurate localization and navigation with less precision. The method of the present disclosure obtains a nested environment data of a facility and estimate current spatial location of a user in the nested environment using surrounding recognition machine learning model. An optimal path categorized as convenient path, shortest path and multi-destination path from the current spatial location to a destination is determined. The current spatial location of the user is tracked on the optimal path using an augmented reality technique when navigation starts. The optimal path is dynamically updated based on feedback obtained from one or more user interaction modalities. The present disclosure provides user navigation with last meter precision, and no hardware and internet dependency. To be published with FIG. 2

No. of Pages : 35 No. of Claims : 12

(12) PATENT APPLICATION PUBLICATION
(19) INDIA
(22) Date of filing of Application :15/01/2020

(21) Application No.202021001774 A
(43) Publication Date : 16/07/2021

(54) Title of the invention : SELF-RELIANT SAFETY SYSTEM FOR A WITHDRAWABLE CIRCUIT BREAKER

(51) International classification	:B41J0025340000, G03G0021180000, H01H0003320000, F16K0011056000, H02B0011127000	(71)**Name of Applicant :** **1)Larsen & Toubro Limited** Address of Applicant :L&T House, Ballard Estate, P.O Box No. 278, Mumbai- 400001, Maharashtra, India. Maharashtra India
(31) Priority Document No	:NA	(72)**Name of Inventor :**
(32) Priority Date	:NA	**1)KAPU NAGARJUN**
(33) Name of priority country	:NA	**2)MOHAMED ABDUL QUADIR M**
(86) International Application No	:NA	**3)SENTHILKUMAR K**
Filing Date	:NA	
(87) International Publication No	: NA	
(61) Patent of Addition to Application Number	:NA	
Filing Date	:NA	
(62) Divisional to Application Number	:NA	
Filing Date	:NA	

(57) Abstract :
The present disclosure relates to a safety system for power contacts in a circuit breaker. The system includes movable plates 104 positioned on a fixed unit 100 of the circuit breaker and fixed plates 106 to hold the movable plates 104 on the fixed unit 102. The fixed unit 100 having power contacts 302. The movable plates 104 provided with first cams 108 and includes holes 702 to allow movement of plugs 202 of a detachable unit 200 through it. The system includes actuators 204 having second cams coupled to the detachable unit 200 such that attachment and detachment of the detachable unit 200 to/from the fixed unit 100 engages and disengages the first cams and second cams to open and close the holes 702 respectively. The holes 702 allows the plugs 202 to come in contact with the power contacts 302, and the closing of the holes 702 restricts exposure of the power contacts 302 and electrical components of the circuit breaker.

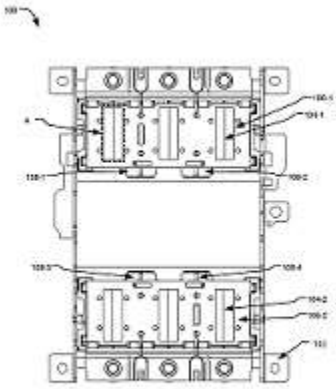

FIG. 1

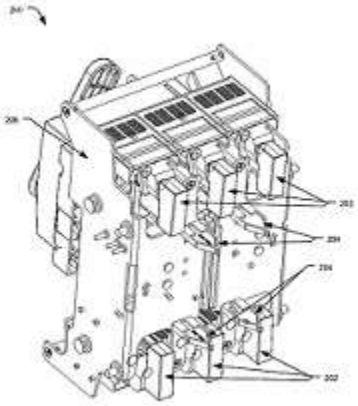

FIG. 2

No. of Pages : 25 No. of Claims : 10

(12) PATENT APPLICATION PUBLICATION
(19) INDIA
(22) Date of filing of Application :10/01/2020
(21) Application No.202023001203 A
(43) Publication Date : 16/07/2021

(54) Title of the invention : MANIFOLD FOR DOMESTIC WATER PURIFIER SYSTEM WITH SPECIFIC CARTRIDGE REPLACEMENT

(51) International classification	:C02F0001000000, C02F0001440000, B01D0035300000, C02F0001280000, B01D0029520000	(71)**Name of Applicant :** **1)Marmon Water (Singapore) Pte. Ltd.** Address of Applicant :No. 2 Serangoon North Avenue 5 #01-01, Singapore 554911 Singapore
(31) Priority Document No	:NA	(72)**Name of Inventor :**
(32) Priority Date	:NA	**1)SINGH, Vivek Kunwar Narendra**
(33) Name of priority country	:NA	**2)JUJARAY, Sathyanarayana**
(86) International Application No	:NA	**3)K N, Rajesh**
Filing Date	:NA	**4)SINGH, Narendra Pratap**
(87) International Publication No	: NA	
(61) Patent of Addition to Application Number	:201821002091	
Filed on	:18/01/2018	
(62) Divisional to Application Number	:NA	
Filing Date	:NA	

(57) Abstract :
A manifold for domestic water purification systems having flow paths that can be redirected without having to change the physical structure of the manifold or water purification system a structure to assist with proper installation of specific filter cartridges, a memory reader for processing data relating to the state of the filter cartridges, a hinge system to allow for easier installation/removal of new and replacement filter cartridges, and a flow path structure to assist in adding accessories to the water filtration system without requiring a modification to the manifold structure.

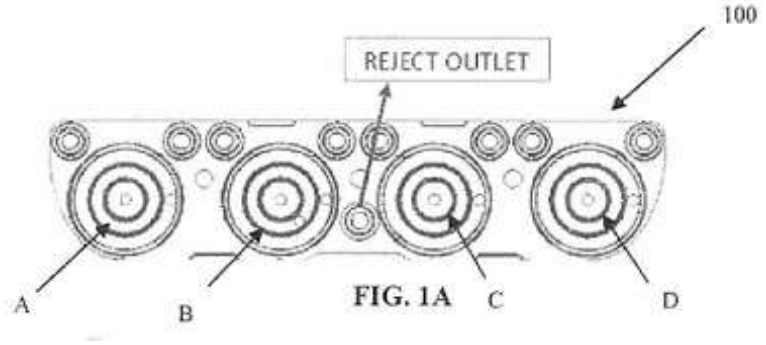

FIG. 1A

No. of Pages : 37 No. of Claims : 20

(12) PATENT APPLICATION PUBLICATION
(19) INDIA
(22) Date of filing of Application :13/01/2020

(21) Application No.202023001468 A
(43) Publication Date : 16/07/2021

(54) Title of the invention : A METHOD FOR THROTTLING A HYBRID VEHICLE

(51) International classification	:B60W0010080000, B60W0010060000, B60W0050000000, B60W0020000000, F02D0009020000	(71)**Name of Applicant :** **1)The Automotive Research Association of India (ARAI)** Address of Applicant :Survey No. 102, Vetal Hill, Off Paud Road, Kothrud, Pune - 411038, Maharashtra, India Maharashtra India
(31) Priority Document No	:NA	(72)**Name of Inventor :**
(32) Priority Date	:NA	**1)KAUNDINYA, Ashwin Subramanian**
(33) Name of priority country	:NA	**2)KARLE, Ujjwala Shailesh**
(86) International Application No	:NA	**3)GARAPATI, Sriyan**
Filing Date	:NA	**4)GHUGAL, Swapnil R**
(87) International Publication No	: NA	**5)SHAH, Rathin S**
(61) Patent of Addition to Application Number	:201821048259	
Filed on	:20/12/2018	
(62) Divisional to Application Number	:NA	
Filing Date	:NA	

(57) Abstract :
A method and system for throttling a hybrid two wheeled vehicle is disclosed. An electronic control unit (206) coupled to a plurality of sensors (220) collects data such as a charge level of a battery (208), an engine rpm and a throttle percentage opening and activates a charge strategy or a drive strategy accordingly. The electronic control unit (206) throttles a motor or an engine of a hybrid two wheeled vehicle based on the computed throttle demand and motor torque.

FIGURE 1

No. of Pages : 19 No. of Claims : 10

(12) PATENT APPLICATION PUBLICATION
(21) Application No.202023001671 A
(19) INDIA
(22) Date of filing of Application :14/01/2020
(43) Publication Date : 16/07/2021

(54) Title of the invention : POLYMERIC COMPOSITE MEMBRANES AND A PROCESS FOR MANUFACTURE THEREOF

(51) International classification	:B01D0069120000, B01D0067000000, B01J0020180000, H01M0008103900, B01D0071600000	(71)**Name of Applicant :** **1)Indian Institute of Technology Bombay** Address of Applicant :Powai, Mumbai 400076. Maharashtra India (72)**Name of Inventor :** **1)Bellare Jayesh** **2)Modi Akshay**
(31) Priority Document No	:NA	
(32) Priority Date	:NA	
(33) Name of priority country	:NA	
(86) International Application No	:NA	
Filing Date	:NA	
(87) International Publication No	: NA	
(61) Patent of Addition to Application Number	:201721046576	
Filed on	:26/12/2017	
(62) Divisional to Application Number	:NA	
Filing Date	:NA	

(57) Abstract :
The present invention provides a polymeric composite membrane comprising a nanohybrid with zeolitic imidazole framework-67 (ZIF-67) decorated carbon nanomaterial and a polymeric membrane wherein said nanohybrid is embedded in the said polymeric membrane. The present invention also relates to a process for preparing said polymeric composite membrane and their use for separation applications such as removal of toxic heavy metals from water.

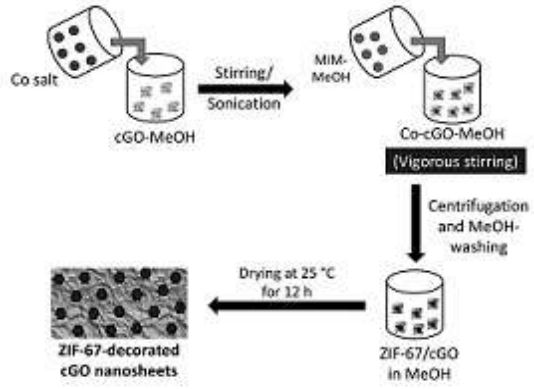

Figure 1

No. of Pages : 35 No. of Claims : 12

(12) PATENT APPLICATION PUBLICATION
(19) INDIA
(22) Date of filing of Application :19/06/2020
(21) Application No.202024025991 A
(43) Publication Date : 16/07/2021

(54) Title of the invention : ELECTRONIC DEVICE

(51) International classification	:G06F0003041000, G06F0003044000, B25C0001000000, A61M0016000000, G06F0003045000
(31) Priority Document No	:202010026494.6
(32) Priority Date	:10/01/2020
(33) Name of priority country	:China
(86) International Application No	:NA
Filing Date	:NA
(87) International Publication No	: NA
(61) Patent of Addition to Application Number	:NA
Filing Date	:NA
(62) Divisional to Application Number	:NA
Filing Date	:NA

(71)**Name of Applicant :**
1)BEIJING XIAOMI MOBILE SOFTWARE CO., LTD.
Address of Applicant :No. 018, Floor 8, Building 6, Yard 33, Middle Xierqi Road, Haidian District, Beijing 100085, China
China
(72)**Name of Inventor :**
1)CHEN, Jianli
2)WANG, Qi

(57) Abstract :
The present disclosure relates to an electronic device, including a first motor, a second motor, a touch sensor, a pressure sensor, a processor, and a switching circuit, wherein the pressure sensor is connected to the processor, and is configured to generate a pressure value when sensing a pressing operation, and output the pressure value to the processor; the processor is connected to the switching circuit, and is configured to generate a trigger signal when the pressure value exceeds a set pressure threshold, and output the trigger signal to the switching circuit; the touch sensor is configured to sense position data of the pressing operation and output the position data to the switching circuit; the switching circuit is connected to the first motor and the second motor, respectively, and is configured to select the first motor or the second motor to vibrate according to the trigger signal and the position data.

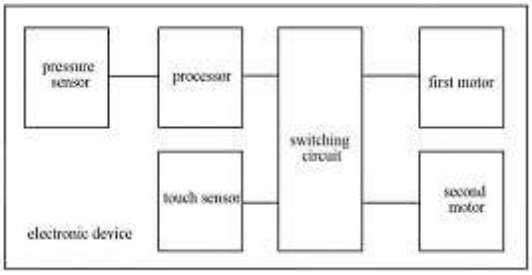

Fig.1

No. of Pages : 25 No. of Claims : 9

(12) PATENT APPLICATION PUBLICATION
(19) INDIA
(22) Date of filing of Application :23/03/2020
(21) Application No.202027012581 A
(43) Publication Date : 16/07/2021

(54) Title of the invention : ELECTROCHEMICAL DEVICE AND ELECTRONIC DEVICE INCLUDING SAME

(51) International classification :H01M 4/62
(31) Priority Document No :201910203680.X
(32) Priority Date :18/03/2019
(33) Name of priority country :China
(86) International Application No :PCT/CN2020/071471
Filing Date :10/01/2020
(87) International Publication No :WO 2020/186913
(61) Patent of Addition to Application Number :NA
Filing Date :NA
(62) Divisional to Application Number :NA
Filing Date :NA

(71)**Name of Applicant :**
1)NINGDE AMPEREX TECHNOLOGY LIMITED
Address of Applicant :No.1 XinGang Road, ZhangWan Town, JiaoCheng District, Ningde City, Fujian 352100 China
(72)**Name of Inventor :**
1)WANG, Kefei

(57) Abstract :
An electrochemical device and an electronic device including the same are provided. In particular, the electrochemical device, including a cathode, an anode and an electrolytic solution, where the anode includes a carbon material and hydroxyalkyl methylcellulose, and the electrolytic solution includes propionate. The electrochemical device has excellent cycle, storage and low-temperature performance.

No. of Pages : 44 No. of Claims : 15

(12) PATENT APPLICATION PUBLICATION
(21) Application No.202027012867 A
(19) INDIA
(22) Date of filing of Application :24/03/2020
(43) Publication Date : 16/07/2021

(54) Title of the invention : ROBOT EXTERNAL MOTION PATH CONTROL METHOD

(51) International classification :B25J 9/16
(31) Priority Document No :2017107707657
(32) Priority Date :31/08/2017
(33) Name of priority country :China
(86) International Application No :PCT/CN2017/117063
Filing Date :19/12/2017
(87) International Publication No :WO 2019/041658
(61) Patent of Addition to Application Number :NA
Filing Date :NA
(62) Divisional to Application Number :NA
Filing Date :NA

(71)**Name of Applicant :**
1)NANJING ESTUN ROBOTICS CO., LTD
Address of Applicant :178 Yanhu Road, Jiangning Economic Development Zone Nanjing, Jiangsu 211106 China
(72)**Name of Inventor :**
1)FENG, Riyue
2)WANG, Jihu
3)JING, Shuyi
4)PAN, Tingting
5)DING, Yadong
6)XIA, Zhengxian

(57) Abstract :
Disclosed in the invention is a robot external motion path control method. A robot controller receives external input motion path control signals; the signals are then processed by a signal processing module and a kinematics module in the controller into data capable of being received by an actuator; and curve motion of a robot along a complex path defined by a user is achieved. The method further comprises a software safety protection module, safety verification and data correction are carried out on the received control signals, and if the control signals cannot meet the requirement for normal running of the robot, then data correction is carried out on the control signals, so that running safety of the robot is guaranteed. With the method, the complex path curve of the robot is controlled, the robot controller has the beneficial effects of high accuracy, high reliability and high efficiency, the requirement for simple operation of a client is met, the manufacturing cost of the robot controller is low, and the method is effectively suitable for the robot engineering application environment.

No. of Pages : 9 No. of Claims : 4

(12) PATENT APPLICATION PUBLICATION
(21) Application No.202027032749 A
(19) INDIA
(22) Date of filing of Application :30/07/2020
(43) Publication Date : 16/07/2021

(54) Title of the invention : POLYOLEFIN-BASED NONWOVEN FABRIC PROCESSING AGENT AND POLYOLEFIN-BASED NONWOVEN FABRIC

(51) International classification	:D06M 13/224, D04H 3/007, D06M 13/188, D06M 13/256, D06M 13/262
(31) Priority Document No	:2019-005167
(32) Priority Date	:16/01/2019
(33) Name of priority country	:Japan
(86) International Application No	:PCT/JP2020/000935
Filing Date	:15/01/2020
(87) International Publication No	:WO 2020/149272
(61) Patent of Addition to Application Number	:NA
Filing Date	:NA
(62) Divisional to Application Number	:NA
Filing Date	:NA

(71)**Name of Applicant :**
1)TAKEMOTO YUSHI KABUSHIKI KAISHA
Address of Applicant :2-5, Minato-machi, Gamagori-shi, Aichi 4438611 Japan
(72)**Name of Inventor :**
1)KANEKO Ikki
2)MORITA Masatake
3)KOMURO Toshihiro

(57) Abstract :
This polyolefin-based nonwoven fabric processing agent is characterized by the inclusion of the following ether-ester compound and the following polyether-modified silicone. The ether-ester compound is an ether-ester compound obtained by condensing a monocarboxylic fatty acid Y with a compound yielded by adding an alkylene oxide having 2 to 4 carbons to an ester compound of a polyhydric alcohol and a monocarboxylic fatty acid X. The polyether-modified silicone has a mass average molecular weight of 1,000 to 100,000.

No. of Pages : 24 No. of Claims : 7

(12) PATENT APPLICATION PUBLICATION
(19) INDIA
(22) Date of filing of Application :16/09/2020

(21) Application No.202027040162 A
(43) Publication Date : 16/07/2021

(54) Title of the invention : TERMINAL

(51) International classification :H04M 1/02, G03B 15/03
(31) Priority Document No :NA
(32) Priority Date :NA
(33) Name of priority country :NA
(86) International Application No :PCT/CN2018/079614
Filing Date :20/03/2018
(87) International Publication No :WO 2019/178743
(61) Patent of Addition to Application Number :NA
Filing Date :NA
(62) Divisional to Application Number :NA
Filing Date :NA

(71)**Name of Applicant :**
1)HUAWEI TECHNOLOGIES CO., LTD.
Address of Applicant :Huawei Administration Building, Bantian Longgang District Shenzhen, Guangdong 518129 China
(72)**Name of Inventor :**
1)MAO, Weihua
2)LV, Ren
3)ZHA, Peng
4)WU, Bo

(57) Abstract :
The present application provides a terminal. The terminal of the present application is provided with a first opening and a second opening; at least two cameras and a distance detection sensor are provided in the first opening; the distance detection sensor is positioned in a gap between the two cameras; a flashlight is provided in the second opening. In this way, there are few openings in the back of the terminal of the present application and the openings are small, layout of components is compact, and the appearance is more attractive.

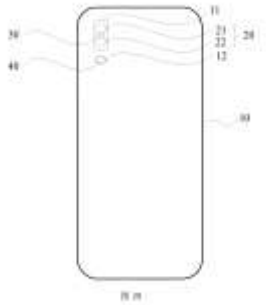

No. of Pages : 26 No. of Claims : 18

(12) PATENT APPLICATION PUBLICATION
(19) INDIA
(22) Date of filing of Application :23/10/2020

(21) Application No.202027046353 A
(43) Publication Date : 16/07/2021

(54) Title of the invention : LENDING OF LOCAL PROCESSING CAPABILITY OF INTERCONNECTED TERMINALS

(51) International classification	:G06F0013400000, G06F0003048000, H04L0009080000, H04L0012580000, H04B0001400000
(31) Priority Document No	:NA
(32) Priority Date	:NA
(33) Name of priority country	:NA
(86) International Application No	:PCT/CN2018/086225
Filing Date	:09/05/2018
(87) International Publication No	:WO 2019/213882
(61) Patent of Addition to Application Number	:NA
Filing Date	:NA
(62) Divisional to Application Number	:NA
Filing Date	:NA

(71)**Name of Applicant :**
1)HUAWEI TECHNOLOGIES CO., LTD.
Address of Applicant :Huawei Administration Building Bantian, Longgang District Shenzhen, Guangdong China
(72)**Name of Inventor :**
1)TANG, Zhongliang
2)LIU, Yi
3)WANG, Bihai
4)WU, Xiaohui

(57) Abstract :
Embodiments of the present application relate to the technical field of terminals, and provide a method for the lending of local processing capability of interconnected terminals, so that a user of a low-end device enjoys the task processing capability of a high-end device, and the use experience of the user of the low-end device is improved. The specific solution comprises: after taking a picture, a first electronic device processes the picture by borrowing the processing capability of a second electronic device; and the first electronic device displays the result after the picture is processed by the second electronic device. The embodiments of the present application are used for sharing processing capacity.

No. of Pages : 59 No. of Claims : 16

(12) PATENT APPLICATION PUBLICATION
(19) INDIA
(22) Date of filing of Application :05/11/2020

(21) Application No.202027048404 A
(43) Publication Date : 16/07/2021

(54) Title of the invention : INFORMATION TRANSMISSION METHOD, TERMINAL DEVICE, AND NETWORK DEVICE

(51) International classification	:H04W0074080000, H04W0072040000, H04W0004700000, H04W0028020000, H04L0029080000
(31) Priority Document No	:NA
(32) Priority Date	:NA
(33) Name of priority country	:NA
(86) International Application No	:PCT/CN2018/086621
Filing Date	:11/05/2018
(87) International Publication No	:WO 2019/213978
(61) Patent of Addition to Application Number	:NA
Filing Date	:NA
(62) Divisional to Application Number	:NA
Filing Date	:NA

(71)**Name of Applicant :**
1)HUAWEI TECHNOLOGIES CO., LTD.
Address of Applicant :Huawei Administration Building Bantian, Longgang District Shenzhen, Guangdong China
(72)**Name of Inventor :**
1)ZHAO, Yue
2)YU, Zheng

(57) Abstract :
An information transmission method, a terminal device, and a network device. The information transmission method comprises: a communication device, when in coverage enhancement mode A, receiving a random access response, wherein the random access response comprises indication information and uplink grant information, the indication information indicates that a Msg 3 transmitted by the communication device is a first Msg 3 or a second Msg 3, the uplink grant information comprises first resource information and repeat count information, when the communication device has an uplink bandwidth of 1.4 MHZ and the indication information indicates that the Msg 3 transmitted by the communication device is the first Msg 3, the uplink grant information has a bit size of 20 bits, and when the indication information indicates that the Msg 3 transmitted by the communication device is the second Msg 3, the uplink grant information has a bit size of 12 bits; and the communication device transmitting the Msg 3 according to the indication information, the first resource information and the repeat count information. The method and device provided in an embodiment of the present invention are applicable to communication systems, such as communication systems employing V2X, LTE-V, V2V, Internet of Vehicles, MTC, , LTE-M, M2M, and Internet of Things.

No. of Pages : 69 No. of Claims : 25

(12) PATENT APPLICATION PUBLICATION
(19) INDIA
(22) Date of filing of Application :06/11/2020

(21) Application No.202027048602 A
(43) Publication Date : 16/07/2021

(54) Title of the invention : DATA TRANSMISSION METHOD AND DEVICE

(51) International classification	:H04W0072040000, H04L0001000000, H04L0005000000, H04L0001180000, H04W0080080000
(31) Priority Document No	:NA
(32) Priority Date	:NA
(33) Name of priority country	:NA
(86) International Application No	:PCT/CN2018/086622
Filing Date	:11/05/2018
(87) International Publication No	:WO 2019/213979
(61) Patent of Addition to Application Number	:NA
Filing Date	:NA
(62) Divisional to Application Number	:NA
Filing Date	:NA

(71)**Name of Applicant :**
1)HUAWEI TECHNOLOGIES CO., LTD.
Address of Applicant :Huawei Administration Building Bantian, Longgang Shenzhen, Guangdong China
(72)**Name of Inventor :**
1)ZHAO, Yue
2)YU, Zheng

(57) Abstract :
The present application provides a data transmission method and a device. The method comprises: receiving first configuration information indicating a first transport block size (TBS); determining a pre-determined TBS set according to the first TBS, the pre-determined TBS set comprising one or more TBSs, and the first TBS being the largest TBS in the TBS set; determining, from the pre-determined TBS set, a second TBS for transmitting first data; and sending the first data according to the second TBS. The invention enables terminal apparatuses to select a suitable TBS according to a data volume, thereby reducing data transmission latency.

No. of Pages : 34 No. of Claims : 30

(12) PATENT APPLICATION PUBLICATION
(21) Application No.202027051795 A
(19) INDIA
(22) Date of filing of Application :27/11/2020
(43) Publication Date : 16/07/2021

(54) Title of the invention : VOICE CONTROL METHOD, WEARABLE APPARATUS, AND TERMINAL

(51) International classification	:G10L0017000000, G10L0015220000, G10L0017220000, G06F0021320000, G10L0015260000
(31) Priority Document No	:NA
(32) Priority Date	:NA
(33) Name of priority country	:NA
(86) International Application No	:PCT/CN2018/093829
Filing Date	:29/06/2018
(87) International Publication No	:WO 2020/000427
(61) Patent of Addition to Application Number	:NA
Filing Date	:NA
(62) Divisional to Application Number	:NA
Filing Date	:NA

(71)**Name of Applicant :**
1)HUAWEI TECHNOLOGIES CO., LTD.
Address of Applicant :Huawei Administration Building Bantian, Longgang District Shenzhen, Guangdong China
(72)**Name of Inventor :**
1)ZHANG, Long
2)LI, Chunjian
3)QIU, Cunshou
4)CHANG, Qing

(57) Abstract :
Embodiments of the present application disclose a voice control method, a wearable apparatus, and a terminal, relating to the field of terminals, so as to improve the accuracy and security of speaker recognition when a user uses voice control to control a terminal. The method comprises: a terminal establishing a communication connection with a wearable apparatus; when a speaking user inputs voice information into the wearable apparatus, the terminal performing identity verification on the speaking user according to a first speaker recognition result of a first voice component in the voice information and a second speaker recognition result of a second voice component in the voice information, the first voice component being acquired by a first voice sensor of the wearable apparatus, and the second voice component being acquired by a second voice sensor of the wearable apparatus; and when an identity verification result of the speaking user of the terminal shows that the speaking user is an authorized user, the terminal executing an operation instruction corresponding to the voice information.

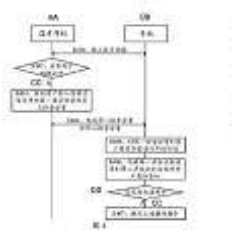

No. of Pages : 37 No. of Claims : 22

(12) PATENT APPLICATION PUBLICATION
(19) INDIA
(22) Date of filing of Application :14/12/2020

(21) Application No.202027054348 A
(43) Publication Date : 16/07/2021

(54) Title of the invention : INFORMATION TRANSMISSION METHOD AND APPARATUS

(51) International classification	:H04L0005000000, H04W0072040000, H04L0029080000, H04W0004700000, H04W0028040000
(31) Priority Document No	:NA
(32) Priority Date	:NA
(33) Name of priority country	:NA
(86) International Application No	:PCT/CN2018/090898
Filing Date	:12/06/2018
(87) International Publication No	:WO 2019/237259
(61) Patent of Addition to Application Number	:NA
Filing Date	:NA
(62) Divisional to Application Number	:NA
Filing Date	:NA

(71)**Name of Applicant :**
1)HUAWEI TECHNOLOGIES CO., LTD.
Address of Applicant :Huawei Administration Building Bantian, Longgang Shenzhen, Guangdong 518129 China
(72)**Name of Inventor :**
1)ZHENG, Juan
2)LI, Chaojun

(57) Abstract :
The present application provides an information transmission method. The method is applied to a communication system, a request transmission resource and a feedback transmission resource included in which have M coincident time units in a time domain. The method comprises: where a duration between a time unit determined by a terminal device for transmitting an SR and the first time unit in the M time units is shorter than a pre-set duration, the terminal device sending the SR and feedback information on each of the M time units at the same time; or, where the time unit determined by the terminal device for transmitting the SR is a time unit in the M time units except for the first time unit in the M time units, the terminal device only sending the feedback information on each of the M time units. In this way, the detection complexity of a network device can be effectively reduced. The method provided by the present embodiment can be applied to a communication system, such as V2X, LTE-V, V2V, Internet of Vehicles, MTC, the Internet of Things (IoT), LTE-M and M2M.

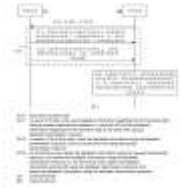

No. of Pages : 45 No. of Claims : 28

(12) PATENT APPLICATION PUBLICATION
(21) Application No.202027055008 A
(19) INDIA
(22) Date of filing of Application :17/12/2020
(43) Publication Date : 16/07/2021

(54) Title of the invention : MESSAGE DISPLAY METHOD AND TERMINAL

(51) International classification	:H04L0012580000, H04M0001725000, G06Q0010060000, G06F0021600000, G06F0003048000	(71)**Name of Applicant :** **1)HUAWEI TECHNOLOGIES CO., LTD.** Address of Applicant :Huawei Administration Building Bantian, Longgang District Shenzhen, Guangdong 518129 China (72)**Name of Inventor :** **1)HUANG, Yan**
(31) Priority Document No	:NA	
(32) Priority Date	:NA	
(33) Name of priority country	:NA	
(86) International Application No	:PCT/CN2018/096151	
Filing Date	:18/07/2018	
(87) International Publication No	:WO 2020/014900	
(61) Patent of Addition to Application Number	:NA	
Filing Date	:NA	
(62) Divisional to Application Number	:NA	
Filing Date	:NA	

(57) Abstract :
Disclosed in the present application are a message display method and a terminal, relating to the field of terminals, and being able to display, on a terminal, a real timing relationship among multiple messages. Said method comprises: a first terminal displaying a chat interface with a second terminal, the chat interface comprising an input box and a dialog area; the first terminal receiving, at a first time, a first character of a first message inputted by a user into the input box, the first message comprising X characters; the first terminal starting to send at the first time to the second terminal in real time, characters inputted by the user in the input box; the first terminal receiving, at a second time, a first character of a second message sent by the second terminal, the second time being later than the first time, the second message comprising Y characters; the first terminal receiving, at a third time, a first preset character inputted by the user into the input box, the first preset character being used to indicate that the first message ends, the third time being later than the second time; and the first terminal displaying, in the dialog area, the first message as a message earlier than the second message.

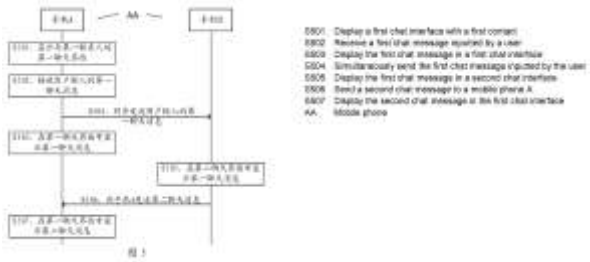

No. of Pages : 29 No. of Claims : 31

(12) PATENT APPLICATION PUBLICATION
(21) Application No.202027056741 A
(19) INDIA
(22) Date of filing of Application :28/12/2020
(43) Publication Date : 16/07/2021

(54) Title of the invention : METHOD AND APPARATUS OF REFERENCE SAMPLE INTERPOLATION FOR BIDIRECTIONAL INTRA PREDICTION

(51) International classification	:H04N0019593000, H04N0019176000, H04N0019105000, H04N0019587000, H04N0019590000	(71)**Name of Applicant :** **1)HUAWEI TECHNOLOGIES CO., LTD.** Address of Applicant :Huawei Administration Building Bantian Longgang District Shenzhen, Guangdong 518129 China **2)FILIPPOV, Alexey Konstantinovich**
(31) Priority Document No	:NA	(72)**Name of Inventor :**
(32) Priority Date	:NA	**1)FILIPPOV, Alexey Konstantinovich**
(33) Name of priority country	:NA	**2)FILIPPOV, Alexey Konstantinovich**
(86) International Application No	:PCT/EP2018/069849	**3)CHEN, Jianle**
Filing Date	:20/07/2018	
(87) International Publication No	:WO 2020/015841	
(61) Patent of Addition to Application Number	:NA	
Filing Date	:NA	
(62) Divisional to Application Number	:NA	
Filing Date	:NA	

(57) Abstract :
The present invention relates to an improvement of known bidirectional inter-prediction methods. According to the present invention, instead of interpolation from secondary reference samples, for calculating samples in intra prediction, calculation based onprimary" reference sample values only is used. The result is then refined by adding an increment which depends at least on the position of the pixel (sample) within the current block and may further depend on the shape and size of the block and the prediction direction but does not depend on any additionalsecondary" reference sample values. The processing according to the present invention is thus less computationally complex because it uses a single interpolation procedure rather than doing it twice: for primary and secondary reference samples.

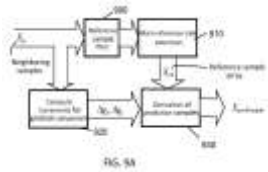

No. of Pages : 40 No. of Claims : 21

(12) PATENT APPLICATION PUBLICATION
(19) INDIA
(22) Date of filing of Application :22/01/2021

(21) Application No.202127003156 A
(43) Publication Date : 16/07/2021

(54) Title of the invention : MAIL TRANSLATION METHOD, AND ELECTRONIC DEVICE

(51) International classification	:G06F0003048800, G06F0040580000, G06F0003048100, G06F0003035400, G06F0003048400
(31) Priority Document No	:NA
(32) Priority Date	:NA
(33) Name of priority country	:NA
(86) International Application No	:PCT/CN2018/097613
Filing Date	:27/07/2018
(87) International Publication No	:WO 2020/019330
(61) Patent of Addition to Application Number	:NA
Filing Date	:NA
(62) Divisional to Application Number	:NA
Filing Date	:NA

(71)**Name of Applicant :**
1)HUAWEI TECHNOLOGIES CO., LTD.
Address of Applicant :Huawei Administration Building, Bantian, Longgang District Shenzhen, Guangdong China
(72)**Name of Inventor :**
1)LI, Chenshu
2)LI, Yu
3)WANG, Quanquan

(57) Abstract :
A mail translation method and an electronic device, relating to the technical field of terminals. The method comprises: displaying a first user interface, wherein the first user interface comprises a mail writing area, and the mail writing area comprises content written by the user; adding a first mail translation area to the first user interface in response to a translation operation carried out on the content written by the user, wherein the first mail translation area comprises a first result preview area and a function bar; the first result preview area comprises a translation result of the content written by the user, and the function bar comprises a replacement button; and in response to an operation carried out on the replacement button, replacing the content written by the user and comprised in the mail writing area with the translation result, and displaying the translation result. This technical solution helps to simplify the operation mode and improve the operation efficiency.

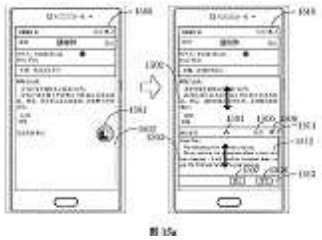

No. of Pages : 35 No. of Claims : 11

(12) PATENT APPLICATION PUBLICATION
(19) INDIA
(22) Date of filing of Application :01/03/2021

(21) Application No.202127008417 A
(43) Publication Date : 16/07/2021

(54) Title of the invention : UNIQUE IDENTITIES OF ENDPOINTS ACROSS LAYER 3 NETWORKS

(51) International classification	:H04L0029120000, H04L0012240000, H04L0029080000, H04L0029060000, H04L0012260000
(31) Priority Document No	:16/135839
(32) Priority Date	:19/09/2018
(33) Name of priority country	:U.S.A.
(86) International Application No	:PCT/US2019/050891
Filing Date	:12/09/2019
(87) International Publication No	:WO 2020/060844
(61) Patent of Addition to Application Number	:NA
Filing Date	:NA
(62) Divisional to Application Number	:NA
Filing Date	:NA

(71)**Name of Applicant :**
1)CISCO TECHNOLOGY, INC.
Address of Applicant :170 West Tasman Drive San Jose, California 95134 U.S.A.
(72)**Name of Inventor :**
1)PETERSON, Annika Lee Louise
2)WONG, Edmund L.

(57) Abstract :
Systems and methods provide for determining unique identities of endpoints across L3 networks. For example, a first networking device of a network management system in a first L3 network can receive a mapping of a first L3 network address to a first L2 network address from a second networking device in a second L3 network. The system can determine that the first L2 network address is associated with a third networking device. The system can receive a mapping of the L3 address to a second L2 network address from the third device. The system can determine that the second L2 address is associated with an endpoint. The system can store the L3 address and the second L2 address as an identity of the endpoint. The system can present network utilization information of the endpoint using traffic to/from the L3 address correlated to the endpoint based on its identity.

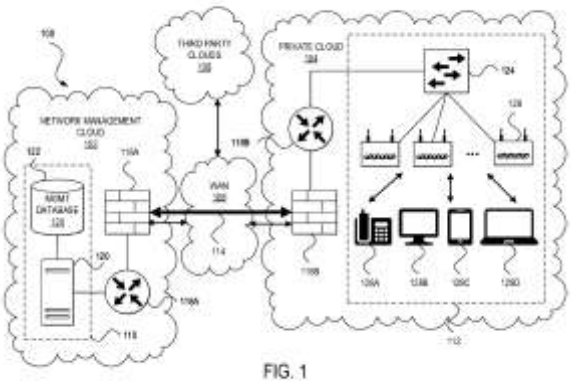

FIG. 1

No. of Pages : 36 No. of Claims : 20

(12) PATENT APPLICATION PUBLICATION
(19) INDIA
(22) Date of filing of Application :01/03/2021

(21) Application No.202127008422 A
(43) Publication Date : 16/07/2021

(54) Title of the invention : SIMPLIFICATION OF SPATIAL-TEMPORAL MOTION VECTOR PREDICTION

(51) International classification	:H04N0019176000, H04N0019520000, H04W0048160000, H04N0019460000, H04N0005926000
(31) Priority Document No	:62/741413
(32) Priority Date	:04/10/2018
(33) Name of priority country	:U.S.A.
(86) International Application No	:PCT/US2019/054747
Filing Date	:04/10/2019
(87) International Publication No	:WO 2020/072935
(61) Patent of Addition to Application Number	:NA
Filing Date	:NA
(62) Divisional to Application Number	:NA
Filing Date	:NA

(71)**Name of Applicant :**
1)QUALCOMM INCORPORATED
Address of Applicant :ATTN: International IP Administration 5775 Morehouse Drive San Diego, California 92121-1714 U.S.A.
(72)**Name of Inventor :**
1)HAN, Yu
2)HUANG, Han
3)CHIEN, Wei-Jung
4)KARCZEWICZ, Marta

(57) Abstract :
A device and method for coding video data determines a spatial-temporal motion vector predictor (STMVP) so that the STMVP does not need to be motion vector scaled. The device may determine a candidate list. The device may then determine which candidates in the candidate list have the same reference picture. The device may then generate the STMVP based on the candidates in the candidate list determined to have the same reference picture. The device may then code a current block of video data using the STMVP.

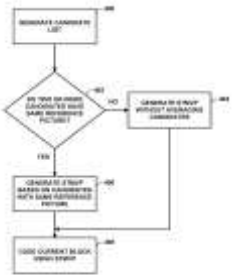

FIG. 14

No. of Pages : 54 No. of Claims : 30

(12) PATENT APPLICATION PUBLICATION
(19) INDIA
(22) Date of filing of Application :01/03/2021

(21) Application No.202127008459 A
(43) Publication Date : 16/07/2021

(54) Title of the invention : CONTROL METHOD, TERMINAL AND NETWORK ELEMENT

(51) International classification	:H04W0072040000, H04N0019700000, F24F0011560000, H04W0080080000, H04M0003000000
(31) Priority Document No	:201810866294.4
(32) Priority Date	:01/08/2018
(33) Name of priority country	:China
(86) International Application No	:PCT/CN2019/098551
Filing Date	:31/07/2019
(87) International Publication No	:WO 2020/024970
(61) Patent of Addition to Application Number	:NA
Filing Date	:NA
(62) Divisional to Application Number	:NA
Filing Date	:NA

(71)**Name of Applicant :**
1)VIVO MOBILE COMMUNICATION CO.,LTD.
Address of Applicant :#283, BBK Road,Wusha,Chang'an Dongguan, Guangdong 523860 China
(72)**Name of Inventor :**
1)KE, Xiaowan

(57) Abstract :
The present invention provides a control method, a terminal and a network element. The control method comprises: sending first information, the first information comprising at least one of the following: information for indicating whether the terminal supports ability signaling optimization and the ability signaling optimization capability of the terminal.

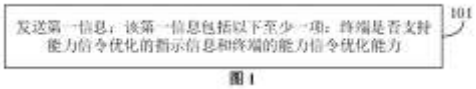

图1

101 Send first information, the first information comprising at least one of the following: information for indicating whether a terminal supports ability signaling optimization and the ability signaling optimization capability of the terminal

No. of Pages : 52 No. of Claims : 21

(12) PATENT APPLICATION PUBLICATION
(19) INDIA
(22) Date of filing of Application :01/03/2021

(21) Application No.202127008484 A
(43) Publication Date : 16/07/2021

(54) Title of the invention : TRANSFORMATIONS FOR SIGNAL ENHANCEMENT CODING

(51) International classification	:H04N0019610000, H04N0019330000, H04N0019590000, H04N0019122000, H04N0019930000
(31) Priority Document No	:1812708.4
(32) Priority Date	:03/08/2018
(33) Name of priority country	:U.K.
(86) International Application No	:PCT/GB2019/052154
Filing Date	:01/08/2019
(87) International Publication No	:WO 2020/025957
(61) Patent of Addition to Application Number	:NA
Filing Date	:NA
(62) Divisional to Application Number	:NA
Filing Date	:NA

(71)**Name of Applicant :**
1)V-NOVA INTERNATIONAL LIMITED
Address of Applicant :8th Floor 1 Sheldon Square, Paddington London Greater London W2 6TT U.K.
(72)**Name of Inventor :**
1)MEARDI, Guido
2)DAMNJANOVIC, Ivan

(57) Abstract :
Measures are provided to encode a signal. An input frame (102) is received and down-sampled to obtain a down-sampled frame (103). The down-sampled frame (103) is passed to an encoding module (104) which encodes the down-sampled frame (103) to generate an encoded frame (105). A decoded frame is obtained from a decoding module (106) which generates the decoded frame by decoding the encoded frame (105). A set of residual data (113) is generated by taking a difference between the decoded frame and the down-sampled frame (103) and is encoded to generate a set of encoded residual data. The encoding comprises transforming the set of residual data into a transformed set of residual data. The set of encoded residual data is output to a decoder to enable the decoder to reconstruct the input frame. Measures are also provided to decode a signal.

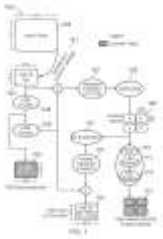

No. of Pages : 18 No. of Claims : 20

(12) PATENT APPLICATION PUBLICATION
(19) INDIA
(22) Date of filing of Application :01/03/2021

(21) Application No.202127008518 A
(43) Publication Date : 16/07/2021

(54) Title of the invention : SETTABLE UNIT FOR INSTALLATION IN OR ON A VEHICLE

(51) International classification	:G11B0005390000, B60R0001120000, B60Q0001260000, F02N0011100000, B60R0001060000
(31) Priority Document No	:2021597
(32) Priority Date	:10/09/2018
(33) Name of priority country	:Netherlands
(86) International Application No	:PCT/NL2019/050585
Filing Date	:10/09/2019
(87) International Publication No	:WO 2020/055243
(61) Patent of Addition to Application Number	:NA
Filing Date	:NA
(62) Divisional to Application Number	:NA
Filing Date	:NA

(71)**Name of Applicant :**
1)MCI (MIRROR CONTROLS INTERNATIONAL) NETHERLANDS B.V.
Address of Applicant :Pompmolenlaan 29 3447 GK Woerden Netherlands
(72)**Name of Inventor :**
1)KLAVER, Gerardus Johannes Maria
2)HUIJZERS, Bastiaan

(57) Abstract :
An adjustable exterior mirror on a vehicle, or another kind of settable unit for installation in or on the vehicle, signals a sensor signal via the current through the current conductors for the supply current of a motor, heating or other function holder in the vision unit. In response to external switching-on of a supply voltage between the current conductors, for example from the vehicle, an aspect of the current is sensor-dependently controlled from the settable unit. In the vehicle, the aspect of the current through at least one of the current conductors is measured during a delay time interval after switching-on of the supply voltage to read out the sensor result.

Fig.2

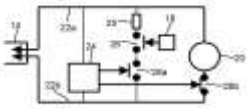

No. of Pages : 18 No. of Claims : 14

(12) PATENT APPLICATION PUBLICATION
(19) INDIA
(22) Date of filing of Application :01/03/2021

(21) Application No.202127008521 A
(43) Publication Date : 16/07/2021

(54) Title of the invention : IMPROVED CRIMPING

(51) International classification	:F03G0007060000, G03B0003100000, G02B0027640000, G03B0005000000, H01R0004180000
(31) Priority Document No	:1813407.2
(32) Priority Date	:16/08/2018
(33) Name of priority country	:U.K.
(86) International Application No	:PCT/GB2019/052305
Filing Date	:16/08/2019
(87) International Publication No	:WO 2020/035697
(61) Patent of Addition to Application Number	:NA
Filing Date	:NA
(62) Divisional to Application Number	:NA
Filing Date	:NA

(71)**Name of Applicant :**
1)CAMBRIDGE MECHATRONICS LIMITED
Address of Applicant :The Westbrook Centre, Building 6 Milton Road Cambridge Cambridgeshire CB4 1YG U.K.
(72)**Name of Inventor :**
1)BROWN, Andrew Benjamin Simpson
2)HOWARTH, James
3)BUNTING, Stephen
4)EDDINGTON, Robin

(57) Abstract :
Broadly speaking, embodiments of the present techniques provide improved techniques for crimping a shape memory alloy (SMA) actuator wire to ensure that electrical connections between a crimp and SMA actuator wire are made in a controlled manner.

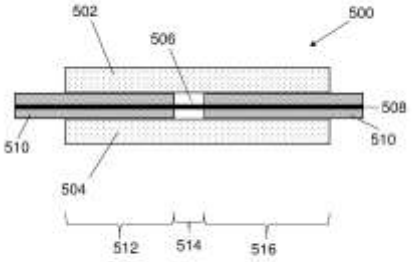

FIGURE 5

No. of Pages : 17 No. of Claims : 25

(12) PATENT APPLICATION PUBLICATION
(19) INDIA
(22) Date of filing of Application :01/03/2021

(21) Application No.202127008522 A
(43) Publication Date : 16/07/2021

(54) Title of the invention : OCULAR SURGICAL INSTRUMENT

(51) International classification	:A61F0009007000, A61F0009000000, A61F0009008000, A41D0027000000, A61M0005320000
(31) Priority Document No	:62/724098
(32) Priority Date	:29/08/2018
(33) Name of priority country	:U.S.A.
(86) International Application No	:PCT/IL2019/050970
Filing Date	:29/08/2019
(87) International Publication No	:WO 2020/044347
(61) Patent of Addition to Application Number	:NA
Filing Date	:NA
(62) Divisional to Application Number	:NA
Filing Date	:NA

(71)**Name of Applicant :**
1)TEL HASHOMER MEDICAL RESEARCH, INFRASTRUCTURE AND SERVICES LTD.
Address of Applicant :The Chaim Sheba Medical Center, Tel HaShomer 1 Emek HaEla Street Ramat Gan 5262160 Israel
(72)**Name of Inventor :**
1)LESHNO, Ari

(57) Abstract :
Apparatus for performing an ocular surgery, the apparatus comprising: a support housing having a bottom configured to be positioned on the sclera of an eye during performance of an ocular surgery; a muscle hook holder connected to the support housing and configured to hold an ocular muscle hook so that the ocular muscle hook is translatable to elevate an ocular muscle away from the eye during performance of the surgery; and a set of graduation markings on the support housing useable to determine a distance that the ocular muscle hook is translated to elevate the ocular muscle.

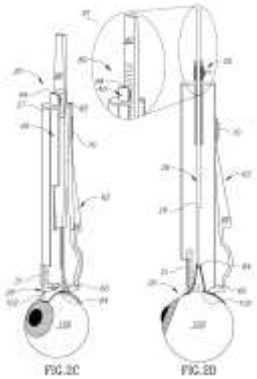

No. of Pages : 15 No. of Claims : 21

(12) PATENT APPLICATION PUBLICATION
(19) INDIA
(22) Date of filing of Application :01/03/2021

(21) Application No.202127008543 A
(43) Publication Date : 16/07/2021

(54) Title of the invention : CENTRIFUGAL PUMP UNIT

(51) International classification	:F04D0029420000, G01F0001580000, G01F0001600000, F04D0001060000, F04D0013140000
(31) Priority Document No	:1814762.9
(32) Priority Date	:11/09/2018
(33) Name of priority country	:U.K.
(86) International Application No	:PCT/GB2019/052519
Filing Date	:10/09/2019
(87) International Publication No	:WO 2020/053572
(61) Patent of Addition to Application Number	:NA
Filing Date	:NA
(62) Divisional to Application Number	:NA
Filing Date	:NA

(71)**Name of Applicant :**
1)XYLEM EUROPE GMBH .
Address of Applicant :Bleicheplatz 6 8200 Schaffhausen Switzerland
(72)**Name of Inventor :**
1)DAMES, Andrew
2)PIAZZA, Vicenzo
3)PRICE, Mathew
4)MEANWELL, Hilary
5)CANTOR, Michael

(57) Abstract :
A centrifugal pump unit (1) is disclosed. The centrifugal pump unit includes a body (4) which comprises a suction connection (5), a pressure connection (6) and a pump chamber (7) connecting the suction and pressure connections. The centrifugal pump unit further includes an impeller (8) disposed in the pump chamber and at least one electromagnetic flow sensor (3) arranged to measure flow in at least a part of the suction connection and/or pressure connection and/or pump chamber for determining a flow rate of a fluid through the centrifugal pump unit.

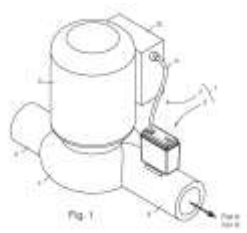

No. of Pages : 24 No. of Claims : 25

(12) PATENT APPLICATION PUBLICATION
(19) INDIA
(22) Date of filing of Application :01/03/2021
(21) Application No.202127008563 A
(43) Publication Date : 16/07/2021

(54) Title of the invention : SUPPORT SKIRT FOR COKING DRUM

(51) International classification	:C10B0055000000, C10B0039060000, C10G0009180000, C10B0057080000, C10G0009000000
(31) Priority Document No	:62/713836
(32) Priority Date	:02/08/2018
(33) Name of priority country	:U.S.A.
(86) International Application No	:PCT/US2019/027205
Filing Date	:12/04/2019
(87) International Publication No	:WO 2020/027886
(61) Patent of Addition to Application Number	:NA
Filing Date	:NA
(62) Divisional to Application Number	:NA
Filing Date	:NA

(71)**Name of Applicant :**
1)AZZ WSI LLC
Address of Applicant :3100 W 7th Street, Suite 500 Fort Worth, TX 76107-8701 U.S.A.
(72)**Name of Inventor :**
1)SCANDROLI, Tony

(57) Abstract :
An apparatus for improving thermal-mechanical stress resistance in a delayed coking drum having a drum shell. The apparatus includes a support skirt section configured to mount to and to assist in supporting the coking drum above a ground surface. A joining edge joins the support skirt section to an exterior portion of the drum shell. A T-shaped slot is formed in the support skirt section and is located proximate the joining edge. The T-shaped slot may be formed by a vertical slot portion and a horizontal slot portion joined together as a single slot.

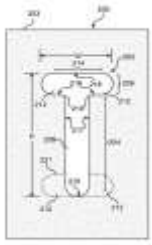

FIG. 4

No. of Pages : 11 No. of Claims : 20

(12) PATENT APPLICATION PUBLICATION
(19) INDIA
(22) Date of filing of Application :01/03/2021

(21) Application No.202127008564 A
(43) Publication Date : 16/07/2021

(54) Title of the invention : BASE METAL DOPED ZIRCONIUM OXIDE CATALYST SUPPORT MATERIALS

(51) International classification	:B01J0037020000, B01J0035000000, B01D0053940000, B01J0023630000, F01N0003100000	(71)**Name of Applicant :** **1)BASF CORPORATION** Address of Applicant :100 Park Avenue Florham Park, New Jersey 07932 U.S.A.
(31) Priority Document No	:NA	(72)**Name of Inventor :** **1)LIU, Fudong** **2)DEEBA, Michel**
(32) Priority Date	:NA	
(33) Name of priority country	:NA	
(86) International Application No	:PCT/US2018/048159	
Filing Date	:27/08/2018	
(87) International Publication No	:WO 2020/046266	
(61) Patent of Addition to Application Number	:NA	
Filing Date	:NA	
(62) Divisional to Application Number	:NA	
Filing Date	:NA	

(57) Abstract :
This disclosure is directed to catalyst compositions, catalytic articles for purifying exhaust gas emissions and methods of making and using the same. In particular, the disclosure relates to a catalytic article including a catalytic material on a substrate, wherein the catalytic material has a first layer and a second layer. The first layer includes a platinum group metal (PGM) component impregnated on a porous support material; and the second layer includes a rhodium component impregnated on a support material, wherein the support material is a composite material including zirconia doped with baria, alumina, or combinations thereof, wherein the zirconia-based support material includes zirconia in an amount from about 80 to about 99 wt.%.

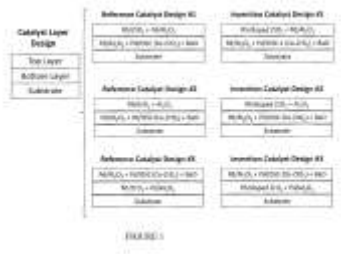

No. of Pages : 27 No. of Claims : 24

(12) PATENT APPLICATION PUBLICATION
(19) INDIA
(22) Date of filing of Application :01/03/2021
(21) Application No.202127008583 A
(43) Publication Date : 16/07/2021

(54) Title of the invention : SIDELINK CHANNEL CONFIGURATION METHOD, TERMINAL DEVICE, AND NETWORK DEVICE

(51) International classification	:H04L0005000000, H04L0027260000, H04W0072040000, H04W0004400000, H04W0004460000
(31) Priority Document No	:PCT/CN2018/099846
(32) Priority Date	:10/08/2018
(33) Name of priority country	:China
(86) International Application No	:PCT/CN2018/108083
Filing Date	:27/09/2018
(87) International Publication No	:WO 2020/029403
(61) Patent of Addition to Application Number	:NA
Filing Date	:NA
(62) Divisional to Application Number	:NA
Filing Date	:NA

(71)**Name of Applicant :**
1)GUANGDONG OPPO MOBILE TELECOMMUNICATIONS CORP., LTD.
Address of Applicant :No.18 Haibin Road, Wusha, Chang'an Dongguan, Guangdong 523860 China
(72)**Name of Inventor :**
1)ZHAO, Zhenshan
2)LU, Qianxi
3)LIN, Huei-Ming

(57) Abstract :
Embodiments of the present application provide a sidelink channel configuration method, a terminal device, and a network device, for use in flexibly configuring DMRSs of a PSCCH and a PSSCH to each occupy some of time domain symbols in one subframe, thereby meeting requirements for data interaction in V2X based on an NR system. The method comprises: a terminal device determines that a second time domain symbol in a first sidelink channel is a first DMRS time domain symbol, and two adjacent DMRS time domain symbols are spaced by N time domain symbols, wherein the first sidelink channel occupies K time domain symbols, K is a positive integer and 1=N<K.

No. of Pages : 40 No. of Claims : 126

(12) PATENT APPLICATION PUBLICATION
(19) INDIA
(22) Date of filing of Application :01/03/2021
(21) Application No.202127008601 A
(43) Publication Date : 16/07/2021

(54) Title of the invention : POSITION SPECIFICATION DEVICE, POSITION SPECIFICATION SYSTEM, POSITION SPECIFICATION METHOD, AND POSITION SPECIFICATION PROGRAM

(51) International classification	:G06K0019070000, A01K0011000000, G01S0005140000, G01S0005020000, G03G0015000000
(31) Priority Document No	:NA
(32) Priority Date	:NA
(33) Name of priority country	:NA
(86) International Application No	:PCT/JP2018/033305
Filing Date	:07/09/2018
(87) International Publication No	:WO 2020/049740
(61) Patent of Addition to Application Number	:NA
Filing Date	:NA
(62) Divisional to Application Number	:NA
Filing Date	:NA

(71)**Name of Applicant :**
1)MITSUBISHI ELECTRIC CORPORATION
Address of Applicant :7-3, Marunouchi 2-chome, Chiyoda-ku, Tokyo 1008310 Japan
(72)**Name of Inventor :**
1)TAKEUCHI, Takeshi
2)KOBAYASHI, Yusuke

(57) Abstract :
Provided are: a storage unit (4) in which device attachment position information is stored indicating the attachment position of a device attached to the underfloor portion of each car of a train, a read position being stored in the storage unit, the read position being the position at which individual information is read from an identification tag in which individual information specifying the device is stored and which is affixed to the device, and being the position at which radio waves are irradiated onto the identification tag, the intensity of the radio waves irradiated onto the identification tag being changed and individual information for the device being stored separately according to the radio wave intensity of each read position; and a position specification unit (5) that uses the individual information that is read separately according to the radio wave intensity of each read position, and the device attachment position information, to specify which device having the individual information is attached, and to which attachment position on each car of the train, and to associate the attachment positions and the individual information.

No. of Pages : 27 No. of Claims : 13

(12) PATENT APPLICATION PUBLICATION
(19) INDIA
(22) Date of filing of Application :01/03/2021

(21) Application No.202127008602 A
(43) Publication Date : 16/07/2021

(54) Title of the invention : ELECTRIC MOTOR

(51) International classification	:H02K0005200000, H02K0009140000, H02K0001200000, H02K0009100000, H02K0005180000
(31) Priority Document No	:NA
(32) Priority Date	:NA
(33) Name of priority country	:NA
(86) International Application No	:PCT/JP2018/033194
Filing Date	:07/09/2018
(87) International Publication No	:WO 2020/049715
(61) Patent of Addition to Application Number	:NA
Filing Date	:NA
(62) Divisional to Application Number	:NA
Filing Date	:NA

(71)**Name of Applicant :**
1)MITSUBISHI ELECTRIC CORPORATION
Address of Applicant :7-3, Marunouchi 2-chome, Chiyoda-ku, Tokyo 1008310 Japan
(72)**Name of Inventor :**
1)AJIOKA Yoshifumi
2)SAKURADA Tetsuya
3)HAGA Seiji
4)IWASA Kazuki

(57) Abstract :
A frame (11) of an electric motor (1) according to the present invention comprises an inlet port (24) for admitting ambient air into the interior of the electric motor (1), and an outlet port (25) for releasing the air to the outside the electric motor (1). The electric motor (1) comprises a first divider member (27) that forms a first ventilation passage (28) between itself and the frame (11), and a second divider member (29) that forms a second ventilation passage (30) between itself and the frame (11). A stator (17) comprises a third ventilation passage (31) that penetrates from one end to the other in the direction of an axis of rotation (AX), and that communicates with the first ventilation passage (28) and the second ventilation passage (30).

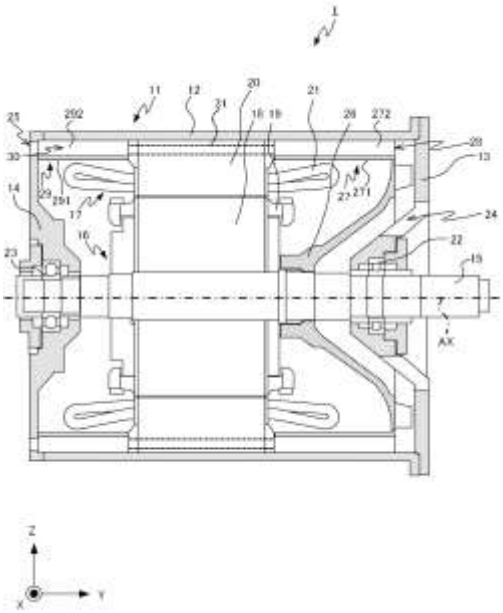

No. of Pages : 19 No. of Claims : 6

(12) PATENT APPLICATION PUBLICATION
(19) INDIA
(22) Date of filing of Application :02/03/2021
(21) Application No.202127008687 A
(43) Publication Date : 16/07/2021

(54) Title of the invention : REFRIGERANT COMPOSITION AND USE THEREOF

(51) International classification	:C09K0005040000, C09K0003300000, C08J0009140000, C11D0007500000, A61K0009000000	(71)**Name of Applicant :** **1)MEXICHEM FLUOR S.A. DE C.V.** Address of Applicant :Eje 106, Zona Industrial San Luis Potosi, C.P. 78395 Mexico **2)MEXICHEM UK LIMITED**
(31) Priority Document No	:1813237.3	(72)**Name of Inventor :**
(32) Priority Date	:14/08/2018	**1)LOW, Robert E**
(33) Name of priority country	:U.K.	
(86) International Application No	:PCT/GB2019/052290	
Filing Date	:14/08/2019	
(87) International Publication No	:WO 2020/035690	
(61) Patent of Addition to Application Number	:NA	
Filing Date	:NA	
(62) Divisional to Application Number	:NA	
Filing Date	:NA	

(57) Abstract :
Use as a refrigerant in a heat pump system in an electric vehicle of a composition is described. The composition comprises 1,1-difluoroethylene (R-1132a) and at least one fluorocarbon refrigerant compound selected from the group consisting of 2,3,3,3-tetrafluoropropene (R- 1234yf), difluoromethane (R-32), 1,3,3,3-tetrafluoropropene (R-1234ze(E)) and 1,1- difluoroethane (R-152a).

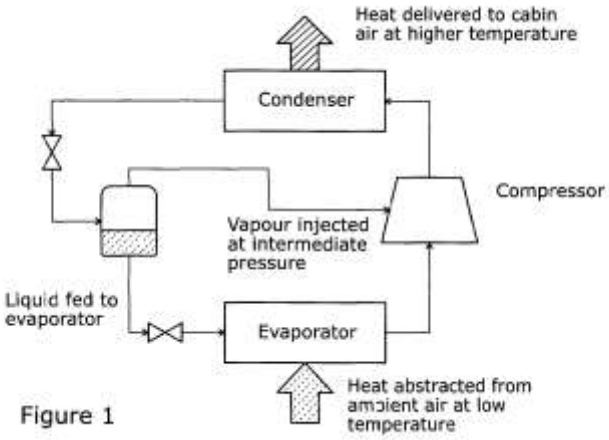

Figure 1

No. of Pages : 52 No. of Claims : 33

(12) PATENT APPLICATION PUBLICATION
(21) Application No.202127008742 A
(19) INDIA
(22) Date of filing of Application :02/03/2021
(43) Publication Date : 16/07/2021

(54) Title of the invention : SIDELINK INFORMATION TRANSMISSION METHOD, AND TERMINAL

(51) International classification	:H04W0072040000, H04W0072020000, H04W0076140000, H04W0092180000, H04W0028200000
(31) Priority Document No	:201810879398.9
(32) Priority Date	:03/08/2018
(33) Name of priority country	:China
(86) International Application No	:PCT/CN2019/097697
Filing Date	:25/07/2019
(87) International Publication No	:WO 2020/024868
(61) Patent of Addition to Application Number	:NA
Filing Date	:NA
(62) Divisional to Application Number	:NA
Filing Date	:NA

(71)**Name of Applicant :**
1)VIVO MOBILE COMMUNICATION CO., LTD.
Address of Applicant :#283, BBK Road, Wusha, Chang' an Dongguan, Guangdong 523860 China
(72)**Name of Inventor :**
1)JI, Zichao

(57) Abstract :
Disclosed are a sidelink information transmission method and a terminal, the method comprising: receiving sidelink control information (SCI); and determining, according to a sidelink transmission identifier indicated by the SCI, whether to receive or demodulate a physical sidelink shared channel (PSSCH).

No. of Pages : 35 No. of Claims : 22

(12) PATENT APPLICATION PUBLICATION
(19) INDIA
(22) Date of filing of Application :02/03/2021

(21) Application No.202127008747 A
(43) Publication Date : 16/07/2021

(54) Title of the invention : ADVANCED LARGE SCALE FIELD-ERECTED AIR COOLED INDUSTRIAL STEAM CONDENSER

(51) International classification	:F28B0001060000, F28D0001040000, B01D0005000000, F28B0009100000, F28F0009013000	(71)**Name of Applicant :** **1)EVAPCO, INC.** Address of Applicant :5151 Allendale Lane Taneytown, Maryland 21757 U.S.A.
(31) Priority Document No	:62/728269	(72)**Name of Inventor :** **1)BUGLER, Thomas**
(32) Priority Date	:07/09/2018	**2)LIBERT, Jean-Pierre**
(33) Name of priority country	:U.S.A.	**3)HUBER, Mark**
(86) International Application No	:PCT/US2019/049878	
Filing Date	:06/09/2019	
(87) International Publication No	:WO 2020/051411	
(61) Patent of Addition to Application Number	:NA	
Filing Date	:NA	
(62) Divisional to Application Number	:NA	
Filing Date	:NA	

(57) Abstract :
Large scale field erected air cooled industrial steam condenser having heat exchanger bundles constructed with an integral secondary section positioned in the center of the heat exchanger, flanked by identical primary condenser sections. A bottom bonnet for delivering steam to the bottom end of the primary condenser tubes and for receiving condensate formed in those same tubes. Uncondensed steam and non-condensables flow into a top bonnet from the primary condenser tubes and flow toward the center of the heat exchanger bundle where they enter the secondary condenser section tubes. Non-condensables and condensate formed in the secondary section tubes enter a secondary bottom bonnet inside the primary bottom bonnet and are withdrawn from the secondary bottom bonnet via outlet nozzle. Each cell of the ACC is fed by a single riser which delivers its steam to an upper steam distribution manifold suspended from and directly below the bundle support framework.

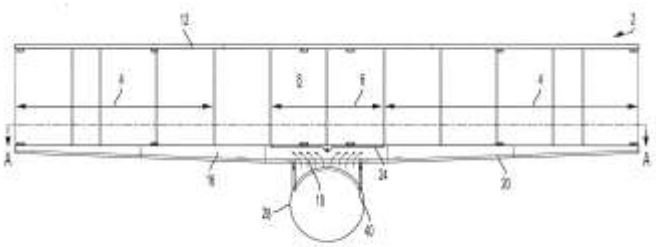

FIG. 9

No. of Pages : 15 No. of Claims : 23

(12) PATENT APPLICATION PUBLICATION
(19) INDIA
(22) Date of filing of Application :02/03/2021

(21) Application No.202127008766 A
(43) Publication Date : 16/07/2021

(54) Title of the invention : CAPABILITY CONTROL METHOD, TERMINAL AND NETWORK-SIDE NETWORK ELEMENT

(51) International classification	:H04W0008240000, H04W0008220000, H04W0056000000, H04W0008180000, H04L0029080000
(31) Priority Document No	:201810879846.5
(32) Priority Date	:03/08/2018
(33) Name of priority country	:China
(86) International Application No	:PCT/CN2019/098554
Filing Date	:31/07/2019
(87) International Publication No	:WO 2020/024972
(61) Patent of Addition to Application Number	:NA
Filing Date	:NA
(62) Divisional to Application Number	:NA
Filing Date	:NA

(71)**Name of Applicant :**
1)VIVO MOBILE COMMUNICATION CO.,LTD.
Address of Applicant :#283, BBK Road, Wusha, Chang'an Dongguan, Guangdong 523860 China
(72)**Name of Inventor :**
1)KE, Xiaowan
2)MA, Yue

(57) Abstract :
The present disclosure provides a capability control method, a terminal and a network-side network element. The capability control method comprises: determining whether a pre-set condition is met, wherein the pre-set condition comprises at least one of the following: the change of a terminal capability, the change of a terminal position, the deletion of a card in a terminal, a newly added card in the terminal, and a position-changed terminal not supporting the optimization of capability signalling; and when the pre-set condition is met, executing a first related operation of a terminal capability.

图 1

101 Determine whether a pre-set condition is met
102 When the pre-set condition is met, execute a first related operation of a terminal capability

No. of Pages : 49 No. of Claims : 21

(12) PATENT APPLICATION PUBLICATION
(19) INDIA
(22) Date of filing of Application :02/03/2021

(21) Application No.202127008805 A
(43) Publication Date : 16/07/2021

(54) Title of the invention : VIDEO SIGNAL PROCESSING METHOD AND APPARATUS USING MULTIPLE TRANSFORM KERNELS

(51) International classification	:H04N0019176000, H04N0019610000, H04N0019122000, H04N0019129000, H04N0019625000
(31) Priority Document No	:10-2018-0107430
(32) Priority Date	:07/09/2018
(33) Name of priority country	:Republic of Korea
(86) International Application No	:PCT/KR2019/011621
Filing Date	:09/09/2019
(87) International Publication No	:WO 2020/050702
(61) Patent of Addition to Application Number	:NA
Filing Date	:NA
(62) Divisional to Application Number	:NA
Filing Date	:NA

(71)**Name of Applicant :**
1)WILUS INSTITUTE OF STANDARDS AND TECHNOLOGY INC.
Address of Applicant :5F 216 Hwangsaeul-ro Bundang-Gu Seongnam-Si Gyeonggi-do 13595 Republic of Korea
2)HUMAX CO., LTD.
(72)**Name of Inventor :**
1)JUNG, Jaehong
2)SON, Juhyung
3)KIM, Dongcheol
4)KO, Geonjung
5)KWAK, Jinsam

(57) Abstract :
A video signal processing method and apparatus for encoding or decoding a video signal are disclosed. More particularly, disclosed are a video signal processing method and a video signal processing apparatus for performing same, the video signal processing method comprising the steps of: obtaining at least one transform block for a residual signal of a current block from a video signal bitstream, wherein the transform block includes a plurality of transform coefficients that are two-dimensionally arranged; determining, on the basis of length information of a first side of the transform block, a horizontal transform kernel for horizontal transformation of the transform block, regardless of the length of a second side of the transform block, which is orthogonal to the first side; determining, on the basis of length information of the second side, a vertical transform kernel for vertical transformation of the transform block, regardless of the length of the first side; obtaining the residual signal of the current block by performing, on the transform block, inverse transformation using the horizontal transform kernel and the vertical transform kernel; and reconstructing the current block on the basis of the obtained residual signal.

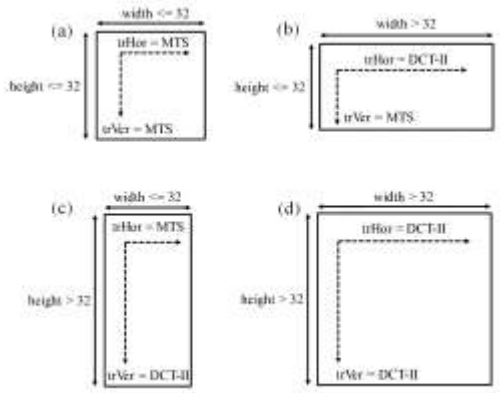

No. of Pages : 89 No. of Claims : 25

(12) PATENT APPLICATION PUBLICATION
(19) INDIA
(22) Date of filing of Application :02/03/2021

(21) Application No.202127008806 A
(43) Publication Date : 16/07/2021

(54) Title of the invention : SIGNAL REPORTING METHOD, TERMINAL DEVICE, AND NETWORK DEVICE

(51) International classification	:H04W0024100000, H04W0088020000, H04B0017318000, H04B0017240000, H04B0007045600	(71)**Name of Applicant :** **1)GUANGDONG OPPO MOBILE TELECOMMUNICATIONS CORP., LTD.** Address of Applicant :No. 18 Haibin Road, Wusha, Chang' an Dongguan, Guangdong 523860 China
(31) Priority Document No	:NA	(72)**Name of Inventor :**
(32) Priority Date	:NA	**1)SHI, Zhihua**
(33) Name of priority country	:NA	**2)CHEN, Wenhong**
(86) International Application No	:PCT/CN2018/099560	**3)ZHANG, Zhi**
Filing Date	:09/08/2018	
(87) International Publication No	:WO 2020/029160	
(61) Patent of Addition to Application Number	:NA	
Filing Date	:NA	
(62) Divisional to Application Number	:NA	
Filing Date	:NA	

(57) Abstract :
A signal reporting method, a terminal device and a network device. The terminal device can be configured to measure a reporting volume other than that of L1-RSRP, so as to facilitate the flexible measurement of signals and to improve the reliability of signal selection. The method comprises: a terminal device determining signals under measurement used for signal measurement according to resource allocation information; the terminal device measuring a first reporting volume of the signals under measurement to obtain a measurement result of the first reporting volume of the signals under measurement, wherein the first reporting volume comprises reporting volumes other than that of the L1-RSRP (Layer 1-reference signal received power); the terminal device determining a signal that needs to be reported in the signals under measurement according to the measurement result of the first reporting volume of the signals under measurement.

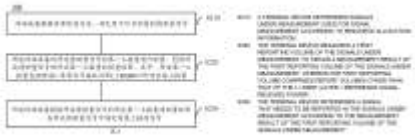

No. of Pages : 34 No. of Claims : 15

(12) PATENT APPLICATION PUBLICATION
(21) Application No.202127008807 A
(19) INDIA
(22) Date of filing of Application :02/03/2021
(43) Publication Date : 16/07/2021

(54) Title of the invention : LAUNCHER CATAPULT TRACK DEVICE

(51) International classification	:B64F0001060000, E02F0009020000, B23P0019020000, E01B0029220000, B60F0003000000
(31) Priority Document No	:201811075299.1
(32) Priority Date	:14/09/2018
(33) Name of priority country	:China
(86) International Application No	:PCT/CN2019/105504
Filing Date	:12/09/2019
(87) International Publication No	:WO 2020/052612
(61) Patent of Addition to Application Number	:NA
Filing Date	:NA
(62) Divisional to Application Number	:NA
Filing Date	:NA

(71)**Name of Applicant :**
1)QIHANG LAUNCHING TECH CO., LTD.
Address of Applicant :1st Changjiang Road Jiaozhou ETDZ Qingdao, Shandong 266300 China
(72)**Name of Inventor :**
1)BI, Hejun

(57) Abstract :
A launcher catapult track device comprises a base (1) and a track (2) located on the base (1). The track (2) can be a single track or can be formed by combining multiple tracks (a, b, c, d, e). The multiple tracks (a, b, c, d, e) are hinge-connected end to end, and extend or retract by collapsing in a lateral direction or a vertical direction of a plane of the track. The track (2) is primarily formed, by means of alignment, insertion and assistive welding, from an upper plate, a lower plate, a left plate, and a right plate (21, 22, 23, 24), and a rib plate (27) therebetween. A rear portion of the track (2) is hinge-connected to the base (1). Two sides of a front portion of the track (2) are coaxially hinge-connected to a pair of balancing hydraulic cylinders (5). The other end of the pair of balancing hydraulic cylinders (5) is coaxially hinge-connected to two sides of the base (1). The launcher catapult track device further comprises a lifting hydraulic cylinder (6). Two ends of the lifting hydraulic cylinder (6) are respectively hinge-connected to the track (2) and the base (1). A hinge shaft of the lifting hydraulic cylinder (6) can be coaxial or parallel to a hinge shaft of the balance hydraulic cylinder (5). The launcher catapult track device has a scientific design, high assembly and manufacturing precision, a light weight, high strength, favorable stability, and low construction costs, and can be easily batch-manufactured.

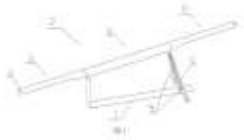

No. of Pages : 22 No. of Claims : 10

(12) PATENT APPLICATION PUBLICATION
(21) Application No.202127008808 A
(19) INDIA
(22) Date of filing of Application :02/03/2021
(43) Publication Date : 16/07/2021

(54) Title of the invention : WIRELESS COMMUNICATION METHOD, COMMUNICATION DEVICE, CHIP, AND COMMUNICATION SYSTEM

(51) International classification	:H04W0080020000, H04L0029080000, H04B0007020000, H04W0028060000, B65D0001340000	(71)**Name of Applicant :** **1)GUANGDONG OPPO MOBILE TELECOMMUNICATIONS CORP., LTD.** Address of Applicant :No.18 Haibin Road, Wusha, Chang'an Dongguan, Guangdong 523860 China
(31) Priority Document No	:PCT/CN2018/099194	(72)**Name of Inventor :** **1)LU, Qianxi**
(32) Priority Date	:07/08/2018	
(33) Name of priority country	:China	
(86) International Application No	:PCT/CN2018/113727	
Filing Date	:02/11/2018	
(87) International Publication No	:WO 2020/029445	
(61) Patent of Addition to Application Number	:NA	
Filing Date	:NA	
(62) Divisional to Application Number	:NA	
Filing Date	:NA	

(57) Abstract :
Provided are a wireless communication method, a communication device, a chip, and a communication system. The method is applied to a communication device. The communication device comprises at least two packet data convergence protocol (PDCP) entities, and the at least two PDCP entities are used for serving identical upper layer data. The method comprises: the communication device receives and/or transmits data by means of the at least two PDCP entities. In the embodiments of the present application, the communication device serves the identical upper layer data by means of the at least two PDCP entities, and can avoid that the service of the PDCP entity is interrupted, thereby improving the transmission efficiency of a data packet.

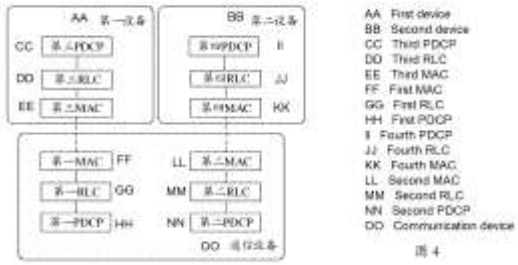

图 4

No. of Pages : 34 No. of Claims : 11

(12) PATENT APPLICATION PUBLICATION
(21) Application No.202127008880 A
(19) INDIA
(22) Date of filing of Application :03/03/2021
(43) Publication Date : 16/07/2021

(54) Title of the invention : TRANSACTION VERIFICATION SYSTEMS AND METHODS FOR VERIFYING A TRANSACTION

(51) International classification	:G06Q0020400000, G06Q0020220000, G06Q0020320000, G06Q0020360000, G06Q0020380000	(71)**Name of Applicant :** **1)HITACHI, LTD.** Address of Applicant :6-6, Marunouchi 1-chome, Chiyoda-ku Tokyo, 100-8280 Japan (72)**Name of Inventor :** **1)PATIT PABAN GOSWAMI, Rajat Goswami** **2)KAZAMA, Yoriko**
(31) Priority Document No	:NA	
(32) Priority Date	:NA	
(33) Name of priority country	:NA	
(86) International Application No	:PCT/SG2019/050115	
Filing Date	:01/03/2019	
(87) International Publication No	:WO 2020/180241	
(61) Patent of Addition to Application Number	:NA	
Filing Date	:NA	
(62) Divisional to Application Number	:NA	
Filing Date	:NA	

(57) Abstract :
According to various embodiments, there is provided a method for verifying a transaction the method including: receiving in a verification server, an identifier of a consumer and a transaction request, from a merchant terminal; retrieving from a consumer database, an expenditure profile and a safe zone profile based on the identifier of the consumer; and comparing the transaction request against the expenditure profile and/or the safe zone profile to detect deviations from a spending pattern and/or a list of safe locations. The transaction request includes merchant location, time and date, and/or monetary value of an ongoing transaction. The expenditure profile includes the spending pattern of the consumer in relation to merchant location, type of purchase, frequency of purchase, time and day of purchase, and/or monetary value of transaction. The safe zone profile includes the list of safe locations.

No. of Pages : 24 No. of Claims : 17

(12) PATENT APPLICATION PUBLICATION
(19) INDIA
(22) Date of filing of Application :03/03/2021

(21) Application No.202127008953 A
(43) Publication Date : 16/07/2021

(54) Title of the invention : VISUAL MODELLING SYSTEM AND METHOD THEREOF

(51) International classification	:H05B0047180000, H04N0001000000, G06F0030130000, G01C0015000000, E04F0015020000	(71)**Name of Applicant :** **1)THE GIANT COMPANY ATTRACTIONS LIMITED** Address of Applicant :8 Cecilia Street Temple Bar Dublin, D02 RW82 Ireland (72)**Name of Inventor :** **1)DUNNING, Paddy**
(31) Priority Document No	:NA	
(32) Priority Date	:NA	
(33) Name of priority country	:NA	
(86) International Application No	:PCT/EP2018/072458	
Filing Date	:20/08/2018	
(87) International Publication No	:WO 2020/038553	
(61) Patent of Addition to Application Number	:NA	
Filing Date	:NA	
(62) Divisional to Application Number	:NA	
Filing Date	:NA	

(57) Abstract :
The present invention provides a visual modelling system operable for modelling the appearance of a scanned object on a structure (109). The visual modelling system relates via a mapping engine a first scan data set to positionally corresponding lighting elements (410) on the structure (109) as defined in a second dataset. An electronic lighting control system (420) energizes the addressable lighting elements (410) in accordance with the mapping engine relation between the first and second scan data sets to represent the scanned image on the structure. The visual modelling system comprises a structure scanning module (400) operable for generating the second scan data set by building a 3D virtual model of the structure (109) defining the location of the lighting elements and the order they are addressed by the electronic lighting control system.

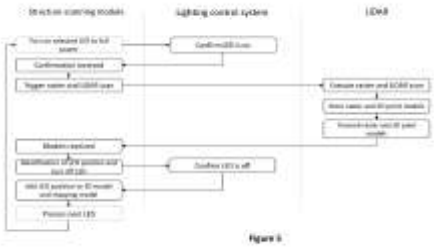

No. of Pages : 19 No. of Claims : 28

(12) PATENT APPLICATION PUBLICATION
(21) Application No.202127008963 A
(19) INDIA
(22) Date of filing of Application :03/03/2021
(43) Publication Date : 16/07/2021

(54) Title of the invention : COMPRESSOR AND REFRIGERATION CYCLE DEVICE

(51) International classification	:F04B0039120000, F04C0023000000, F04B0035040000, F04B0039020000, H02K0005220000
(31) Priority Document No	:NA
(32) Priority Date	:NA
(33) Name of priority country	:NA
(86) International Application No	:PCT/JP2018/041677
Filing Date	:09/11/2018
(87) International Publication No	:WO 2020/095440
(61) Patent of Addition to Application Number	:NA
Filing Date	:NA
(62) Divisional to Application Number	:NA
Filing Date	:NA

(71)**Name of Applicant :**
1)MITSUBISHI ELECTRIC CORPORATION
Address of Applicant :7-3, Marunouchi 2-chome, Chiyoda-ku, Tokyo 1008310 Japan
(72)**Name of Inventor :**
1)ONO, Masashi

(57) Abstract :
Provided is a compressor having disposed within a sealed container an electric motor having: a stator formed by winding a winding on a stator core; a lead wire one end of which is connected to the winding and the other end of which is connected to a power source terminal; and a rotor disposed inside the stator. The angle formed by the straight line which connects a one-end affixation point located at the center of the one end of the lead wire and a compressor center point located at the center of the sealed container, and by the straight line which connects a the-other-end affixation point located at the center of the other end of the lead wire and the compressor center point is 90 degrees or less.

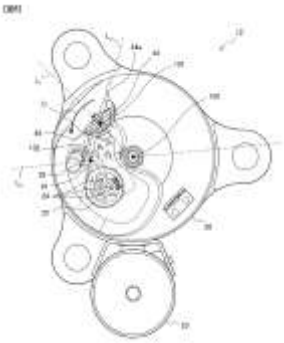

No. of Pages : 21 No. of Claims : 11

(12) PATENT APPLICATION PUBLICATION
(19) INDIA
(22) Date of filing of Application :03/03/2021

(21) Application No.202127008972 A
(43) Publication Date : 16/07/2021

(54) Title of the invention : REDUCING DISTRIBUTED STORAGE OPERATION LATENCY USING SEGMENT ROUTING TECHNIQUES

(51) International classification	:H04L0029080000, H04L0012721000, H04L0012741000, H04L0029060000, G06F0003060000
(31) Priority Document No	:16/121525
(32) Priority Date	:04/09/2018
(33) Name of priority country	:U.S.A.
(86) International Application No	:PCT/US2019/049011
Filing Date	:30/08/2019
(87) International Publication No	:WO 2020/051076
(61) Patent of Addition to Application Number	:NA
Filing Date	:NA
(62) Divisional to Application Number	:NA
Filing Date	:NA

(71)**Name of Applicant :**
1)CISCO TECHNOLOGY, INC.
Address of Applicant :170 West Tasman Drive San Jose, California 95134 U.S.A.
(72)**Name of Inventor :**
1)SURCOUF, Andre Jean-Marie
2)RUTY, Guillaume
3)HAWARI, Mohammed
4)AUGUSTIN, Alos Christophe
5)DESMOUCEAUX, Yoann

(57) Abstract :
Systems, methods, and computer-readable media for reducing distributed storage operation latency using segment routing. In some examples, a method can involve receiving, from a client, a message identifying an intent to store or retrieve data on a distributed storage environment, and sending to the client a segment routing (SR) list identifying storage node candidates for storing or retrieving the data. The method can involve steering a data request from the client through a path defined by the SR list based on a segment routing header (SRH) associated with the request, the SRH being configured to steer the request through the path until a storage node from the storage node candidates accepts the request. The method can further involve sending, to the client device, a response indicating that the storage node has accepted the request and storing or retrieving the data at the storage node that accepted the request.

No. of Pages : 53 No. of Claims : 20

(12) PATENT APPLICATION PUBLICATION
(19) INDIA
(22) Date of filing of Application :03/03/2021

(21) Application No.202127008987 A
(43) Publication Date : 16/07/2021

(54) Title of the invention : 3D-METAL-PRINTING METHOD AND ARRANGEMENT THEREFOR

(51) International classification	:B22F0003105000, B33Y0030000000, B33Y0010000000, B29C0064153000, B42D0025450000	(71)**Name of Applicant :** **1)VALUE & INTELLECTUAL PROPERTIES MANAGEMENT GMBH** Address of Applicant :Bruckm¼hler Strasse 27 83052 Bruckm¼hl/Heufeld Germany
(31) Priority Document No	:10 2018 120 015.3	**2)AIM SWEDEN AB**
(32) Priority Date	:16/08/2018	**3)ADDITIVE INNOVATION AND RESEARCH SWEDEN AB**
(33) Name of priority country	:Germany	(72)**Name of Inventor :**
(86) International Application No	:PCT/DE2019/100723	**1)B„R, Kai K.O.**
Filing Date	:09/08/2019	**2)NEULINGER, Karl**
(87) International Publication No	:WO 2020/035109	**3)R„NNAR, Lars-Erik**
(61) Patent of Addition to Application Number	:NA	**4)KOPTYUG, Andrey**
Filing Date	:NA	
(62) Divisional to Application Number	:NA	
Filing Date	:NA	

(57) Abstract :
The invention relates to a 3D-metal-printing method for producing a spatial metal product substantially consisting of a metal powder or metal filaments as the starting material, the powder or the filaments being structured layer-by-layer by applying starting material layers to a respectively previously produced layer and selective local heating of predefined points of the layer above a sintering or melting temperature of the powder and sintering or fusing the molten points with the underlying layer and optional tempering of the points, wherein at least the respectively newly applied starting material layer is formed by planar irradiating IR radiation in such a manner that a radiation spot having a surface area of at least 5mm2, more specifically of more than 20mm2 and even more specifically of more than 100mm2, is pre-heated and/or, following the local heating of the predetermined points, is post-treated for thermal stress compensation.

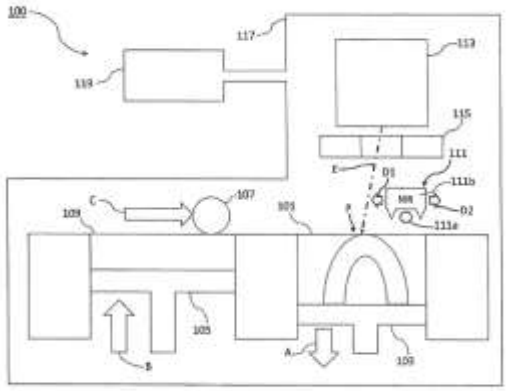

Fig. 1

No. of Pages : 13 No. of Claims : 14

(12) PATENT APPLICATION PUBLICATION
(19) INDIA
(22) Date of filing of Application :03/03/2021

(21) Application No.202127008998 A
(43) Publication Date : 16/07/2021

(54) Title of the invention : SYSTEMS AND METHODS FOR CRYPTOGRAPHIC AUTHENTICATION OF CONTACTLESS CARDS

(51) International classification	:G06Q0020340000, G06K0019070000, H04N0021472000, G06Q0020320000, G06K0019073000
(31) Priority Document No	:62/740352
(32) Priority Date	:02/10/2018
(33) Name of priority country	:U.S.A.
(86) International Application No	:PCT/US2019/053736
Filing Date	:30/09/2019
(87) International Publication No	:WO 2020/072340
(61) Patent of Addition to Application Number	:NA
Filing Date	:NA
(62) Divisional to Application Number	:NA
Filing Date	:NA

(71)**Name of Applicant :**
1)CAPITAL ONE SERVICES, LLC
Address of Applicant :1680 Capital One Drive McLean, VA 22102 U.S.A.
(72)**Name of Inventor :**
1)RULE, Jeffrey
2)HENG, Melissa
3)ASHFIELD, James
4)HART, Colin
5)ILINCIC, Rajko
6)LUTZ, Wayne

(57) Abstract :
Example embodiments of systems and methods for data transmission between a contactless card, a client device, and one or more servers are provided. The contactless card may include one or more processors and memory. The memory may include one or more applets. The client device may include one or more processors and memory. The client device may be in data communication with the contactless card. One or more servers may be in data communication with the client device. A first set of information may be transmitted from the contactless card to the client device. The first set of information may include one or more links to activate the contactless card. The client device may be configured to receive the first set of information from the contactless card. Upon validation of the first set of information, the contactless card may be activated.

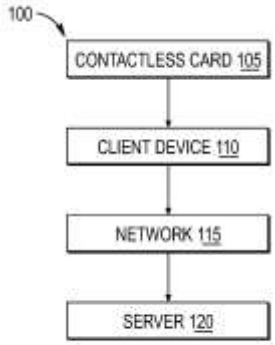

FIG. 1A

No. of Pages : 80 No. of Claims : 20

(12) PATENT APPLICATION PUBLICATION
(21) Application No.202127009010 A
(19) INDIA
(22) Date of filing of Application :03/03/2021
(43) Publication Date : 16/07/2021

(54) Title of the invention : FORMULATION COMPRISING A CELLULOSE ETHER AND/OR A POLYSACCARIDE, AND A FATTY ALCOHOL

(51) International classification	:C04B0111000000, A61K0008340000, A61K0031245000, C04B0024380000, A61K0047380000	(71)**Name of Applicant :** **1)SE TYLOSE GMBH & CO. KG** Address of Applicant :Kasteler Str. 45 65203 Wiesbaden Germany
(31) Priority Document No	:18198634.0	(72)**Name of Inventor :**
(32) Priority Date	:04/10/2018	**1)HAVENITH, Vanessa**
(33) Name of priority country	:EPO	**2)H„CKER, Claus-Jochen**
(86) International Application No	:PCT/EP2019/076705	**3)NEBEL, Heiko**
Filing Date	:02/10/2019	
(87) International Publication No	:WO 2020/070189	
(61) Patent of Addition to Application Number	:NA	
Filing Date	:NA	
(62) Divisional to Application Number	:NA	
Filing Date	:NA	

(57) Abstract :
The invention relates to a formulation which comprises at least one cellulose ether and/or at least one polysaccharide, and at least one fatty alcohol. The invention also relates to the preparation and use of said formulation, especially in building materials.

No. of Pages : 42 No. of Claims : 30

(12) PATENT APPLICATION PUBLICATION
(19) INDIA
(22) Date of filing of Application :03/03/2021

(21) Application No.202127009011 A
(43) Publication Date : 16/07/2021

(54) Title of the invention : FLUIDIC TURBINE STRUCTURE

(51) International classification	:F03D0001060000, A63B0021060000, B29L0031000000, F01D0005020000, F03D0003060000
(31) Priority Document No	:16/121326
(32) Priority Date	:04/09/2018
(33) Name of priority country	:U.S.A.
(86) International Application No	:PCT/CA2019/051232
Filing Date	:04/09/2019
(87) International Publication No	:WO 2020/047658
(61) Patent of Addition to Application Number	:NA
Filing Date	:NA
(62) Divisional to Application Number	:NA
Filing Date	:NA

(71)**Name of Applicant :**
1)BIOMERENEWABLES INC.
Address of Applicant :199 Bay Street Suite 2200 Toronto, Ontario M5L 1G4 Canada
(72)**Name of Inventor :**
1)CHURCH, Ryan

(57) Abstract :
A fluidic structure configured to be mounted onto the hub of a fluidic turbine comprising a hub that rotates about a center axis, aligned to a main shaft that contributes torque to the main shaft of the turbine via the principle of lift and/or drag. The fluidic structure can be rigid or have some flexibility. The structure has two or more curved fluidic elements that extend from an upstream tip that aligns to the center axis of rotation, to a downstream end at some further radial position away from the center axis, and rotates about the center axis, wherein the two or more curved fluidic elements contain chord sections that are generally more wide at the upstream position and general more narrow at the downstream position.

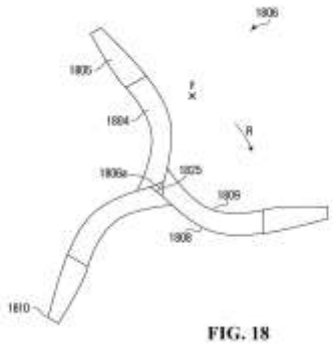

FIG. 18

No. of Pages : 47 No. of Claims : 20

(12) PATENT APPLICATION PUBLICATION
(19) INDIA
(22) Date of filing of Application :03/03/2021

(21) Application No.202127009012 A
(43) Publication Date : 16/07/2021

(54) Title of the invention : SENSOR ARRANGEMENT

(51) International classification	:B61L0001160000, G01P0003440000, A47L0009280000, A47L0005360000, F02D0041000000
(31) Priority Document No	:18192994.4
(32) Priority Date	:06/09/2018
(33) Name of priority country	:EPO
(86) International Application No	:PCT/EP2019/073446
Filing Date	:03/09/2019
(87) International Publication No	:WO 2020/048967
(61) Patent of Addition to Application Number	:NA
Filing Date	:NA
(62) Divisional to Application Number	:NA
Filing Date	:NA

(71)**Name of Applicant :**
1)FRAUSCHER SENSORTECHNIK GMBH
Address of Applicant :Gewerbestr. 1 4774 St. Marienkirchen Austria
(72)**Name of Inventor :**
1)BUCHINGER, Gerald
2)KLAUSMANN, Lorenz

(57) Abstract :
A sensor arrangement (20) comprises a wheel sensor (21) which is arranged to detect wheels of rail vehicles, a carrier (22), and a connector (23), wherein the wheel sensor (21) is fixed on the carrier (22), the connector (23) is fixed to the carrier (22), and the connector (23) is electrically connected with at least one electrical contact (24) of the wheel sensor (21).

No. of Pages : 17 No. of Claims : 19

(12) PATENT APPLICATION PUBLICATION
(19) INDIA
(22) Date of filing of Application :03/03/2021

(21) Application No.202127009013 A
(43) Publication Date : 16/07/2021

(54) Title of the invention : VIDEO IMAGE COMPONENT PREDICTION METHOD AND DEVICE, AND COMPUTER STORAGE MEDIUM

(51) International classification	:H04N0019593000, H04N0019176000, H04N0019186000, H04N0019105000, H04N0019119000
(31) Priority Document No	:NA
(32) Priority Date	:NA
(33) Name of priority country	:NA
(86) International Application No	:PCT/CN2018/099684
Filing Date	:09/08/2018
(87) International Publication No	:WO 2020/029187
(61) Patent of Addition to Application Number	:NA
Filing Date	:NA
(62) Divisional to Application Number	:NA
Filing Date	:NA

(71)**Name of Applicant :**
1)GUANGDONG OPPO MOBILE TELECOMMUNICATIONS CORP., LTD.
Address of Applicant :No.18 Haibin Road, Wusha, Chang'an, Dongguan, Guangdong 523860 China
(72)**Name of Inventor :**
1)HUO, Junyan
2)CHAI, Xiaoyan
3)MA, Yanzhuo
4)YANG, Fuzheng

(57) Abstract :
A video image component prediction method and device, and a computer storage medium. The method comprises: acquiring at least one threshold value according to first image component reconstruction values of all sampling points of a current coding block (S601); carrying out grouping according to a comparison result of a first image component neighboring reference value of the current coding block and the at least one threshold value, so as to obtain at least two groups of first image component neighboring reference values and second image component neighboring reference values (S602); establishing at least two computing models according to the at least two groups of first image component neighboring reference values and second image component neighboring reference values (S603); selecting, from the at least two computing models, a computing model corresponding to each sampling point in the current coding block according to a comparison result of the first image component reconstruction values of all the sampling points of the current coding block and the at least one threshold value (S604); and according to the computing model corresponding to each sampling point in the current coding block, acquiring a second image component prediction value of each sampling point in the current coding block (S605).

No. of Pages : 31 No. of Claims : 10

(12) PATENT APPLICATION PUBLICATION
(19) INDIA
(22) Date of filing of Application :04/03/2021

(21) Application No.202127009041 A
(43) Publication Date : 16/07/2021

(54) Title of the invention : DEVICE FOR SLIDING SUPPORT

(51) International classification	:G01D0005140000, F03D0009250000, F04B0053140000, F16K0031128000, B66B0013080000
(31) Priority Document No	:102018000008268
(32) Priority Date	:31/08/2018
(33) Name of priority country	:Italy
(86) International Application No	:PCT/IB2019/057151
Filing Date	:26/08/2019
(87) International Publication No	:WO 2020/044199
(61) Patent of Addition to Application Number	:NA
Filing Date	:NA
(62) Divisional to Application Number	:NA
Filing Date	:NA

(71)**Name of Applicant :**
1)IRONBOX S.R.L.
Address of Applicant :Via Galvani 6/A (int. 6) 31027 Spresiano (TV) Italy
(72)**Name of Inventor :**
1)GIROTTO, Adriano
2)CESARETTI, Luca
3)PARROTTA, Lorenzo Andrea
4)CONTINI, Riccardo

(57) Abstract :
A supporting device (MC) is described to slidingly support, and linearly move along an axis (X), an object such as e.g. a leaf. A magnetic return force generated by the cooperation of a magnetic flux generator (54, 56) and an element (10) reactive to the magnetic field, develops. The element is able to slide relative to the axis (X) during the movement of the object, and has a cross-section (62) which, seen in a plane orthogonal to the axis (X), has a width that varies along the length of the first element (10) parallelly to said axis (X).

No. of Pages : 12 No. of Claims : 10

(12) PATENT APPLICATION PUBLICATION
(21) Application No.202127009096 A
(19) INDIA
(22) Date of filing of Application :04/03/2021
(43) Publication Date : 16/07/2021

(54) Title of the invention : LAN SERVICE CONTROL METHOD AND COMMUNICATION DEVICE

(51) International classification	:H04W0084120000, H04W0068000000, H04W0012060000, H04Q0003000000, H04W0076190000	(71)**Name of Applicant :** **1)VIVO MOBILE COMMUNICATION CO., LTD.** Address of Applicant :#283, BBK Road, Wusha, Chang'an Dongguan, Guangdong 523860 China (72)**Name of Inventor :** **1)KE, Xiaowan**
(31) Priority Document No	:201810912302.4	
(32) Priority Date	:10/08/2018	
(33) Name of priority country	:China	
(86) International Application No	:PCT/CN2019/098555	
Filing Date	:31/07/2019	
(87) International Publication No	:WO 2020/029843	
(61) Patent of Addition to Application Number	:NA	
Filing Date	:NA	
(62) Divisional to Application Number	:NA	
Filing Date	:NA	

(57) Abstract :
Provided are an LAN service control method and a communication device. The LAN service control method comprises: sending LAN service related information, wherein the LAN service related information comprises at least one of the following: LAN service capability information of a terminal, position information of the terminal, LAN service subscription information and LAN service request information.

No. of Pages : 69 No. of Claims : 17

(12) PATENT APPLICATION PUBLICATION
(19) INDIA
(22) Date of filing of Application :04/03/2021
(21) Application No.202127009098 A
(43) Publication Date : 16/07/2021

(54) Title of the invention : ENCODING METHOD AND APPARATUS THEREFOR, AND DECODING METHOD AND APPARATUS THEREFOR

(51) International classification	:H04N0019176000, H04N0019110000, H04N0019593000, H04N0019105000, H04N0019119000
(31) Priority Document No	:62/722393
(32) Priority Date	:24/08/2018
(33) Name of priority country	:U.S.A.
(86) International Application No	:PCT/KR2019/010866
Filing Date	:26/08/2019
(87) International Publication No	:WO 2020/040626
(61) Patent of Addition to Application Number	:NA
Filing Date	:NA
(62) Divisional to Application Number	:NA
Filing Date	:NA

(71)**Name of Applicant :**
1)SAMSUNG ELECTRONICS CO., LTD.
Address of Applicant :129, Samsung-ro, Yeongtong-Gu, Suwon-Si, Gyeonggi-do 16677 Republic of Korea
(72)**Name of Inventor :**
1)CHOI, Narae
2)PARK, Minwoo
3)PARK, Minsoo
4)CHOI, Kiho
5)PIAO, Yinji
6)JEONG, Seungsoo
7)CHOI, Woongil
8)TAMSE, Anish
9)RYU, Gahyun

(57) Abstract :
Provided is a video decoding method comprising the steps of: acquiring intra prediction mode information indicating an intra prediction mode of a current block; determining an intra prediction direction indicated by the intra prediction mode information, according to the shape of the current block; predicting the current block by performing intra prediction on the current block according to the intra prediction direction; and reconstructing the current block according to the prediction result of the current block, wherein the step of determining the intra prediction direction of the current block comprises the steps of: determining, when the current block has a square shape, the intra prediction direction of the current block according to the prediction direction indicated by the intra prediction mode information; and determining, when the current block has a non-square shape, the intra prediction direction of the current block according to a comparison result of a reference prediction direction determined according to the ratio of the width of the current block to the height thereof and the prediction direction indicated by the intra prediction mode information.

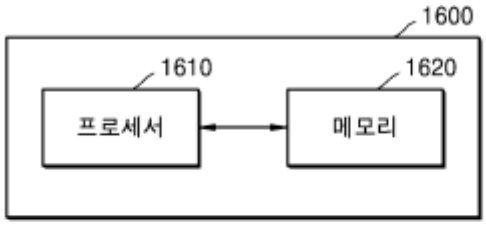

1610 ... Processor
1620 ... Memory

No. of Pages : 98 No. of Claims : 10

(12) PATENT APPLICATION PUBLICATION
(21) Application No.202127009129 A
(19) INDIA
(22) Date of filing of Application :04/03/2021
(43) Publication Date : 16/07/2021

(54) Title of the invention : CONTROL DEVICE FOR HANDLING THE TRANSFER OF ELECTRIC POWER

(51) International classification	:H04L0025020000, H02H0001000000, H01L0023280000, H02H0009040000, H01L0025065000
(31) Priority Document No	:NA
(32) Priority Date	:NA
(33) Name of priority country	:NA
(86) International Application No	:PCT/EP2018/071657
Filing Date	:09/08/2018
(87) International Publication No	:WO 2020/030274
(61) Patent of Addition to Application Number	:NA
Filing Date	:NA
(62) Divisional to Application Number	:NA
Filing Date	:NA

(71)**Name of Applicant :**
1)EPSPOT AB
Address of Applicant :Aluddsparken 7D 112 65 Stockholm Sweden
(72)**Name of Inventor :**
1)OLIN, Jan

(57) Abstract :
Electric power is transferred via a control device to an electric load (LD) in the form of alternating current over at least two incoming and outgoing lines (LIN, NIN, PEIN; LOUT, NOUT, PEOUT). At least one line circuit (101, 120) manages at least one parameter of the transferred electric power. A central circuit (110) exchanges data and/or commands (dc, dc4) with the at least one line circuit (101, 120) over a respective galvanically isolated communication interface (111, 324), such that a reference potential of the central circuit (110) is floating relative to an earth potential of the at least two incoming and outgoing lines. A respective surge protection capacitor (141, 344) is arranged in parallel with each galvanically isolated communication interface. The surge protection capacitors are configured to accumulate a respective fraction of an electric charge resulting from an undesired overvoltage (V) on one of said incoming lines (LIN, NIN, PEIN) so as to split up the undesired overvoltage (V) into two or more voltages over the galvanically isolated communication interfaces each of which voltage is smaller than the undesired overvoltage (V).

No. of Pages : 15 No. of Claims : 10

(12) PATENT APPLICATION PUBLICATION
(19) INDIA
(22) Date of filing of Application :04/03/2021
(21) Application No.202127009150 A
(43) Publication Date : 16/07/2021

(54) Title of the invention : WATER TREATMENT SYSTEM FOR A RECIRCULATION AQUACULTURE FACILITY

(51) International classification	:H01M0008040890, C02F0103000000, C02F0003060000, B01D0021010000, C02F0003000000
(31) Priority Document No	:20185673
(32) Priority Date	:06/08/2018
(33) Name of priority country	:Finland
(86) International Application No	:PCT/EP2019/070988
Filing Date	:05/08/2019
(87) International Publication No	:WO 2020/030574
(61) Patent of Addition to Application Number	:NA
Filing Date	:NA
(62) Divisional to Application Number	:NA
Filing Date	:NA

(71)**Name of Applicant :**
1)LUONNONVARAKESKUS
Address of Applicant :Latokartanonkaari 9 00790 HELSINKI Finland
(72)**Name of Inventor :**
1)KIURU, Tapio
2)VIELMA, Jouni

(57) Abstract :
A water treatment system (100) for a recirculation aquaculture facility, related method and uses thereof are provided. The water treatment system (100) comprises a water pre-treatment facility (120) and a groundwater recharge arrangement (130), wherein said water treatment system forms a primary recirculation flow pathway (111) when integrated with the recirculation aquaculture facility (140), thereupon effluent (111B) discharged from the recirculation aquaculture facility is sequentially directed through (120) and (130) back into the recirculation aquaculture facility via a water collecting circuit network (151) to enter the recirculation aquaculture facility as an influent (111A). The secondary recirculation flow pathway (141) is formed internally within the recirculation aquaculture facility.

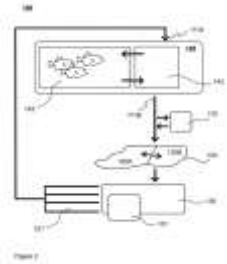

No. of Pages : 20 No. of Claims : 17

(12) PATENT APPLICATION PUBLICATION
(19) INDIA
(22) Date of filing of Application :04/03/2021

(21) Application No.202127009161 A
(43) Publication Date : 16/07/2021

(54) Title of the invention : DISCONTINUOUS RECEPTION WAKEUP OPERATION WITH MULTIPLE COMPONENT CARRIERS

(51) International classification	:H04L0005000000, H04W0076280000, H04W0052020000, H04W0072040000, H04W0076270000
(31) Priority Document No	:62/742240
(32) Priority Date	:05/10/2018
(33) Name of priority country	:U.S.A.
(86) International Application No	:PCT/US2019/054711
Filing Date	:04/10/2019
(87) International Publication No	:WO 2020/072912
(61) Patent of Addition to Application Number	:NA
Filing Date	:NA
(62) Divisional to Application Number	:NA
Filing Date	:NA

(71)**Name of Applicant :**
1)QUALCOMM INCORPORATED
Address of Applicant :Attn: International IP Administration 5775 Morehouse Drive San Diego, California 92121-1714 U.S.A.
(72)**Name of Inventor :**
1)NAM, Wooseok
2)LUO, Tao

(57) Abstract :
Methods, systems, and devices for wireless communications are described. A user equipment (UE) may operate in a discontinuous reception mode, receive configuration signaling configuring the UE with a quantity of carrier aggregation wakeup configurations, as well as receive, while operating in a discontinuous reception mode, a wakeup signal using at least one component carrier. The UE may identify a configuration indicator indicating a first carrier aggregation wakeup configuration of the quantity of carrier aggregation wakeup configurations based on the wakeup signal, and identify a second component carrier based on the first carrier aggregation wakeup configuration. Upon identifying the second component carrier, the UE may monitor a control channel of the second component carrier based on the first carrier aggregation wakeup configuration.

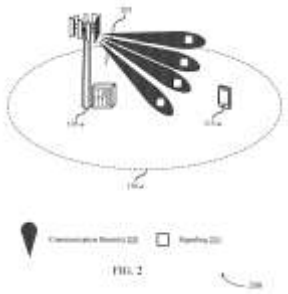

No. of Pages : 76 No. of Claims : 30

(12) PATENT APPLICATION PUBLICATION
(21) Application No.202127009314 A
(19) INDIA
(22) Date of filing of Application :05/03/2021
(43) Publication Date : 16/07/2021

(54) Title of the invention : RANDOM ACCESS METHOD AND TERMINAL DEVICE

(51) International classification	:H04W0074080000, H04L0001180000, H04L0029080000, H04W0074000000, G06F0012087100
(31) Priority Document No	:201810892532.9
(32) Priority Date	:07/08/2018
(33) Name of priority country	:China
(86) International Application No	:PCT/CN2019/096738
Filing Date	:19/07/2019
(87) International Publication No	:WO 2020/029766
(61) Patent of Addition to Application Number	:NA
Filing Date	:NA
(62) Divisional to Application Number	:NA
Filing Date	:NA

(71)**Name of Applicant :**
1)VIVO MOBILE COMMUNICATION CO., LTD.
Address of Applicant :#283, BBK Road, Wusha, Chang'an Dongguan, Guangdong 523860 China
(72)**Name of Inventor :**
1)WU, Yumin

(57) Abstract :
Provided is a random access method and terminal device, wherein the method comprises: when the random access procedure is successful, retaining the first MAC PDU buffered in the HARQ cache, or buffering the second MAC PDU in HARQ cache; wherein, the first MAC PDU is a PDU buffered in the Msg3 cache during the contention random access process, the second MAC PDU is a PDU that includes at least the data content of the first MAC PDU and is buffered in a target cache, the target cache is different from the Msg3 cache.

No. of Pages : 20 No. of Claims : 13

(12) PATENT APPLICATION PUBLICATION
(19) INDIA
(22) Date of filing of Application :05/03/2021

(21) Application No.202127009334 A
(43) Publication Date : 16/07/2021

(54) Title of the invention : USE OF DIVIDED WALL TECHNOLOGY TO PRODUCE HIGH PURITY METHANOL

(51) International classification	:B01D0003140000, B01D0003000000, C07C0041060000, C07C0041420000, C01B0023000000
(31) Priority Document No	:62/730456
(32) Priority Date	:12/09/2018
(33) Name of priority country	:U.S.A.
(86) International Application No	:PCT/US2019/050553
Filing Date	:11/09/2019
(87) International Publication No	:WO 2020/055963
(61) Patent of Addition to Application Number	:NA
Filing Date	:NA
(62) Divisional to Application Number	:NA
Filing Date	:NA

(71)**Name of Applicant :**
1)LUMMUS TECHNOLOGY LLC
Address of Applicant :1515 Broad Street Bloomfield, NJ 07003-3096 U.S.A.
(72)**Name of Inventor :**
1)BARIAS, Rosette
2)MAURER, Alejandro

(57) Abstract :
Methods and systems for producing high purity methanol and isobutene from crude MTBE feed using multiple divided wall columns are provided. The methods can include purifying the MTBE, dissociating the MTBE to produce isobutene and methanol, purifying the isobutene and recovering/purifying methanol.

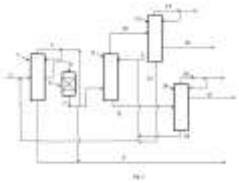

No. of Pages : 18 No. of Claims : 21

(12) PATENT APPLICATION PUBLICATION
(19) INDIA
(22) Date of filing of Application :05/03/2021

(21) Application No.202127009335 A
(43) Publication Date : 16/07/2021

(54) Title of the invention : LOCATION AWARENESS SYSTEM

(51) International classification	:G01S0005020000, G01S0005140000, H04L0029080000, G16H0040200000, B41J0002210000
(31) Priority Document No	:62/732094
(32) Priority Date	:17/09/2018
(33) Name of priority country	:U.S.A.
(86) International Application No	:PCT/US2019/051474
Filing Date	:17/09/2019
(87) International Publication No	:WO 2020/061016
(61) Patent of Addition to Application Number	:NA
Filing Date	:NA
(62) Divisional to Application Number	:NA
Filing Date	:NA

(71)**Name of Applicant :**
1)ROSEMOUNT INC.
Address of Applicant :6021 Innovation Boulevard Shakopee, Minnesota 55379 U.S.A.
(72)**Name of Inventor :**
1)SCHNAARE, Theodore Henry
2)KARSCHNIA, Robert J.
3)ROBINSON, Cory
4)KIELB, John Allan
5)WEINBERGER, Robert
6)LOVEGREN, Eric Russell
7)ROTVOLD, Eric Darrell
8)JOHNSON, James A.
9)NEUHARTH, Jared

(57) Abstract :
A location awareness system (100) including a communication network (102), and a network operating element (111) coupled to the communication network (102). At least one anchor network gateway (104) is coupled to the communication network (102), the at least one anchor network gateway (104) configured to generate a wireless anchor network (105). A plurality of anchors (106) are configured to couple to one of the at least one anchor network gateway (104) via its respective wireless anchor network (105). A plurality of tags (108, 110) is each configured to communicate with at least one anchor (106) to provide ranging information for determination of a position of the tag (108, 110) within an area covered by the system (100).

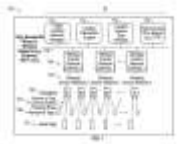

No. of Pages : 14 No. of Claims : 42

(12) PATENT APPLICATION PUBLICATION
(19) INDIA
(22) Date of filing of Application :05/03/2021

(21) Application No.202127009347 A
(43) Publication Date : 16/07/2021

(54) Title of the invention : DETERMINATION METHOD, TERMINAL AND NETWORK DEVICE

(51) International classification	:H04W0072120000, H04W0016140000, H04L0005000000, H04W0072040000, H04W0072140000
(31) Priority Document No	:201810893011.5
(32) Priority Date	:07/08/2018
(33) Name of priority country	:China
(86) International Application No	:PCT/CN2019/097427
Filing Date	:24/07/2019
(87) International Publication No	:WO 2020/029797
(61) Patent of Addition to Application Number	:NA
Filing Date	:NA
(62) Divisional to Application Number	:NA
Filing Date	:NA

(71)**Name of Applicant :**
1)VIVO MOBILE COMMUNICATION CO., LTD.
Address of Applicant :#283, BBK Road, Wusha, Chang'an Dongguan, Guangdong 523860 China
(72)**Name of Inventor :**
1)CHEN, Xiaohang
2)PAN, Xueming

(57) Abstract :
Provided by the embodiments of the present invention are a determination method, a terminal, and a network device, relating to the technical field of communications, and intended to solve the problem of uplink transmission delay in the related art when a UE uses semi-static scheduling for uplink transmission on an unlicensed band. The method Include: receiving first information from a network device; the first information is used to indicate M candidate transmission opportunities for an uplink data channel in a first period, the first period is a period of semi-static scheduling resources on an unlicensed band, and M is a positive integer greater than or equal to 2. and determining M candidate transmission opportunities for the uplink data channel in the first period according to the first information.

No. of Pages : 25 No. of Claims : 18

(12) PATENT APPLICATION PUBLICATION
(19) INDIA
(22) Date of filing of Application :05/03/2021

(21) Application No.202127009359 A
(43) Publication Date : 16/07/2021

(54) Title of the invention : TRACK CONSTRUCTION MACHINE AND METHOD FOR TAMPING SLEEPERS OF A TRACK

(51) International classification	:E01B0027160000, E01B0027170000, E01B0035000000, A01B0063320000, E02F0009200000
(31) Priority Document No	:A 328/2018
(32) Priority Date	:24/10/2018
(33) Name of priority country	:Austria
(86) International Application No	:PCT/EP2019/075451
Filing Date	:23/09/2019
(87) International Publication No	:WO 2020/083584
(61) Patent of Addition to Application Number	:NA
Filing Date	:NA
(62) Divisional to Application Number	:NA
Filing Date	:NA

(71)**Name of Applicant :**
1)PLASSER & THEURER EXPORT VON BAHNBAUMASCHINEN GMBH
Address of Applicant :Johannesgasse 3 1010 WIEN Austria
(72)**Name of Inventor :**
1)PHILIPP, Thomas
2)B–CK, Reinhard

(57) Abstract :
The invention relates to a track construction machine comprising a tamping assembly (1) for tamping sleepers (7) of a track (5) lying in a ballast bed (6), said tamping assembly (1) comprising a tool carrier (8) height-adjustably mounted on an assembly frame (2), on which tool carrier tamping tools (15) are arranged such that they can be moved towards each other, wherein the tool carrier (8) is coupled to a height adjustment drive (10) controlled by means of a control device (16). In order to control a lowering movement (9) of the tool carrier (8), a control circuit is configured with a controller (18), an adjusting device (19) for the height adjustment drive (10), and a measuring device (20) for detecting the lowering movement (9).

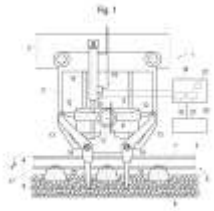

No. of Pages : 14 No. of Claims : 14

(12) PATENT APPLICATION PUBLICATION
(19) INDIA
(22) Date of filing of Application :05/03/2021

(21) Application No.202127009360 A
(43) Publication Date : 16/07/2021

(54) Title of the invention : METHOD AND DEVICE FOR COMPACTING A BALLAST BED

(51) International classification	:E01B0027160000, E01B0001000000, E01B0035000000, E01B0027200000, E01B0027040000
(31) Priority Document No	:A 329/2018
(32) Priority Date	:24/10/2018
(33) Name of priority country	:Austria
(86) International Application No	:PCT/EP2019/075779
Filing Date	:25/09/2019
(87) International Publication No	:WO 2020/083596
(61) Patent of Addition to Application Number	:NA
Filing Date	:NA
(62) Divisional to Application Number	:NA
Filing Date	:NA

(71)**Name of Applicant :**
1)PLASSER & THEURER EXPORT VON BAHNBAUMASCHINEN GMBH
Address of Applicant :Johannesgasse 3 1010 WIEN Austria
(72)**Name of Inventor :**
1)PHILIPP, Thomas
2)DAXBERGER, Harald
3)AUER, Florian

(57) Abstract :
The invention relates to a method for compacting a ballast bed (5), on which railroad ties (6) and track (4) rails (7) secured thereto are supported, using a work assembly (1) which is arranged on a track construction machine that can be moved on the track (4). During a compaction process, a signal is detected and a characteristic variable is derived therefrom by means of an analysis device (17) in order to evaluate the quality of the ballast bed. The work assembly (1) comprises an electric drive (15), by means of which the compaction process is at least partly carried out, wherein at least one operating variable (18) of the electric drive (15) is supplied to the analysis device (17), and a ballast bed characteristic variable (19) is derived from the operating variable (18) by means of the analysis device (17).

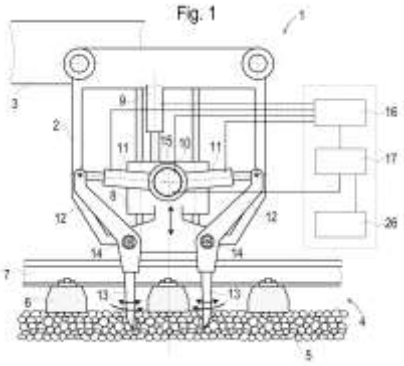

No. of Pages : 15 No. of Claims : 15

(12) PATENT APPLICATION PUBLICATION
(19) INDIA
(22) Date of filing of Application :05/03/2021

(21) Application No.202127009362 A
(43) Publication Date : 16/07/2021

(54) Title of the invention : TAMPING ASSEMBLY FOR TAMPING SLEEPERS OF A TRACK

(51) International classification	:E01B0027160000, E01B0027170000, E01B0027120000, B64C0013500000, B02C0015040000
(31) Priority Document No	:A 330/2018
(32) Priority Date	:24/10/2018
(33) Name of priority country	:Austria
(86) International Application No	:PCT/EP2019/075584
Filing Date	:24/09/2019
(87) International Publication No	:WO 2020/083590
(61) Patent of Addition to Application Number	:NA
Filing Date	:NA
(62) Divisional to Application Number	:NA
Filing Date	:NA

(71)**Name of Applicant :**
1)PLASSER & THEURER EXPORT VON BAHNBAUMASCHINEN GMBH
Address of Applicant :Johannesgasse 3 1010 WIEN Austria
(72)**Name of Inventor :**
1)PHILIPP, Thomas

(57) Abstract :
The invention relates to a tamping assembly (1) for tamping sleepers (5) of a track, comprising a tamping unit having opposing tamping tools (13, 14) mounted on a height-adjustable tool carrier (7) and each coupled to a vibration drive (9) via a servo drive (10, 12), wherein every tamping tool (13, 14) comprises a pivot lever (16, 17) that can rotate about a pivot axis (15) and at least one tamping tool holder for receiving at least one tamping pick. A first servo drive (10) is directly coupled to the vibration drive (9) and hingedly connected to a first pivot lever (16) and a second servo drive (12) is coupled to the vibration drive (9) via a separate coupling unit (11) and hingedly connected to a lever arm (25) mounted on the tool carrier (7) and a second pivot lever (17).

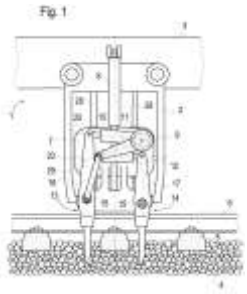

No. of Pages : 8 No. of Claims : 10

(12) PATENT APPLICATION PUBLICATION
(21) Application No.202127009365 A
(19) INDIA
(22) Date of filing of Application :05/03/2021
(43) Publication Date : 16/07/2021

(54) Title of the invention : INFORMATION TRANSMISSION METHOD, MONITORING METHOD AND DEVICE, BASE STATION, TERMINAL AND STORAGE MEDIUM

(51) International classification	:H04W0072040000, H04L0005000000, H04W0072120000, H04L0012260000, H02J0013000000
(31) Priority Document No	:201810899188.6
(32) Priority Date	:08/08/2018
(33) Name of priority country	:China
(86) International Application No	:PCT/CN2019/099861
Filing Date	:08/08/2019
(87) International Publication No	:WO 2020/030064
(61) Patent of Addition to Application Number	:NA
Filing Date	:NA
(62) Divisional to Application Number	:NA
Filing Date	:NA

(71)**Name of Applicant :**
1)ZTE CORPORATION
Address of Applicant :ZTE Plaza, Keji Road South Hi-Tech Industrial Park, Nanshan Shenzhen, Guangdong 518057 China
(72)**Name of Inventor :**
1)ZHANG, Shujuan
2)JIANG, Chuangxin
3)LU, Zhaohua
4)XIE, Wusheng
5)YANG, Wei

(57) Abstract :
Provided in the present document are an information transmission method, monitoring method and device, a base station, a terminal and a storage medium, the method comprising: determining N bandwidth parts which are in an active state; transmitting a channel and/or a signal on the N active bandwidth parts; and/or determining D control channel resource groups, monitoring control information in the D control channel resource groups, and transmitting the channel and/or signal according to the monitored control information.

No. of Pages : 114 No. of Claims : 55

(12) PATENT APPLICATION PUBLICATION
(19) INDIA
(22) Date of filing of Application :05/03/2021

(21) Application No.202127009381 A
(43) Publication Date : 16/07/2021

(54) Title of the invention : METHOD FOR DETERMINING NETWORKING TYPE SUPPORTED BY CELL, AND DEVICE

(51) International classification	:H04W0036000000, H04W0024100000, H04B0007260000, H04W0076270000, G06F0016242000
(31) Priority Document No	:201810893419.2
(32) Priority Date	:07/08/2018
(33) Name of priority country	:China
(86) International Application No	:PCT/CN2019/099341
Filing Date	:06/08/2019
(87) International Publication No	:WO 2020/029933
(61) Patent of Addition to Application Number	:NA
Filing Date	:NA
(62) Divisional to Application Number	:NA
Filing Date	:NA

(71)**Name of Applicant :**
1)VIVO MOBILE COMMUNICATION CO.,LTD.
Address of Applicant :#283, BBK Road, Wusha, Chang'an Dongguan, Guangdong 523860 China
(72)**Name of Inventor :**
1)KIMBA DIT ADAMOU, Boubacar
2)YANG, Xiaodong
3)BAO, Wei

(57) Abstract :
Provided are a method for determining a networking type supported by a cell, and a device. The method comprises: receiving a measurement report of a target cell, the measurement report comprising related information of SIB1 and/or first indication information, and the first indication information being used for indicating a networking type supported by the target cell; and determining the networking type supported by the target cell according to the related information of SIB1 and/or the first indication information.

No. of Pages : 32 No. of Claims : 12

(12) PATENT APPLICATION PUBLICATION
(19) INDIA
(22) Date of filing of Application :05/03/2021
(21) Application No.202127009398 A
(43) Publication Date : 16/07/2021

(54) Title of the invention : SPOTFINDER

(51) International classification	:G08G0001140000, G01C0021340000, G08G0001096700, G08G0001040000, G06K0009000000	(71)**Name of Applicant :** **1)GOOGLE LLC** Address of Applicant :1600 Amphitheatre Parkway Mountain View, CA 94043 U.S.A.
(31) Priority Document No	:NA	(72)**Name of Inventor :** **1)ABDELAZIZ, Omar**
(32) Priority Date	:NA	
(33) Name of priority country	:NA	
(86) International Application No	:PCT/US2019/031330	
Filing Date	:08/05/2019	
(87) International Publication No	:WO 2020/226642	
(61) Patent of Addition to Application Number	:NA	
Filing Date	:NA	
(62) Divisional to Application Number	:NA	
Filing Date	:NA	

(57) Abstract :
A system (100) and method for finding a likely available parking spot within a geographical area are disclosed. The system (100) may be configured to receive a request for directions for a first vehicle (702) to an open parking spot within a particular geographical area (210, 214), receive sensor information indicating potential open parking spots (346, 348), identify likely available parking spots (346, 348), and receive information regarding other vehicles searching for parking in the same geographical area. The system may use the identified likely available spots and the information regarding other vehicles searching for parking when computing a route (218, 220) to a likely available parking spot.

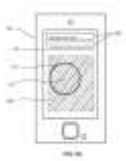

No. of Pages : 15 No. of Claims : 20

(12) PATENT APPLICATION PUBLICATION
(21) Application No.202127009503 A
(19) INDIA
(22) Date of filing of Application :06/03/2021
(43) Publication Date : 16/07/2021

(54) Title of the invention : MEASUREMENT GAP CONFIGURATION METHOD AND NETWORK NODE

(51) International classification	:H04W0024100000, H04W0036000000, H04W0024000000, G01B0021160000, B21B0038100000
(31) Priority Document No	:201810893418.8
(32) Priority Date	:07/08/2018
(33) Name of priority country	:China
(86) International Application No	:PCT/CN2019/097866
Filing Date	:26/07/2019
(87) International Publication No	:WO 2020/029811
(61) Patent of Addition to Application Number	:NA
Filing Date	:NA
(62) Divisional to Application Number	:NA
Filing Date	:NA

(71)**Name of Applicant :**
1)VIVO MOBILE COMMUNICATION CO., LTD.
Address of Applicant :#283, BBK Road, Wusha, Chang'an Dongguan, Guangdong 523860 China
(72)**Name of Inventor :**
1)CHEN, Li

(57) Abstract :
Provided are a measurement gap configuration method and a network node. The measurement gap configuration method is used in a second network node, the method comprising: configuring a first measurement gap for a user device; determining the measurement gap of the user device with a first network node, the measurement gap of the user device being selected from a first measurement gap and a second measurement gap, and the second measurement gap being a measurement gap configured for the user device by the first network node.

No. of Pages : 32 No. of Claims : 20

(12) PATENT APPLICATION PUBLICATION
(19) INDIA
(22) Date of filing of Application :30/06/2021
(21) Application No.202128029284 A
(43) Publication Date : 16/07/2021

(54) Title of the invention : SELF-CONTAINED TIME DIVISION DUPLEX (TDD) SUBFRAME STRUCTURE •

(51) International classification	:H04L0005140000, H04L0005000000, H04B0007260000, H04W0072120000, H04N0019159000
(31) Priority Document No	:62/133,386
(32) Priority Date	:15/03/2015
(33) Name of priority country	:U.S.A.
(86) International Application No	:PCT/US2016/019942
Filing Date	:26/02/2016
(87) International Publication No	: NA
(61) Patent of Addition to Application Number	:NA
Filing Date	:NA
(62) Divisional to Application Number	:201727026477
Filed on	:26/07/2017

(71)**Name of Applicant :**
1)QUALCOMM INCORPORATED
Address of Applicant :Attn: International IP Administration, 5775 Morehouse Drive, San Diego, California 92121-1714, United States of America U.S.A.
(72)**Name of Inventor :**
1)MUKKAVILLI, Krishna Kiran
2)JI, Tingfang
3)BHUSHAN, Naga
4)SORIAGA, Joseph Binamira
5)SMEE, John Edward
6)JIANG, Jing

(57) Abstract :
SELF-CONTAINED TIME DIVISION DUPLEX (TDD) SUBFRAME STRUCTURE • Aspects of the present disclosure provide a subframe structure for time division duplex (TDD) carriers that can be entirely self-contained. That is, information transmitted on a TDD carrier may be grouped into subframes, where each subframe provides communication in both directions (e.g., uplink and downlink) in a suitable fashion to enable such communication without needing any further information in another subframe. For example, a single subframe may include scheduling information, data information corresponding to the scheduling information, and acknowledgment information corresponding to the data information. [Figure: 5] -

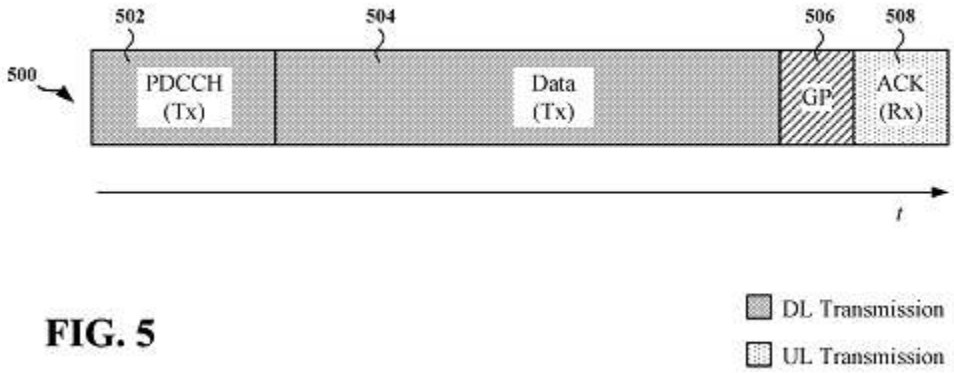

FIG. 5

No. of Pages : 61 No. of Claims : 94

CONTINUED TO PART- 2